20th Edition

Modern Refrigeration and Air Conditioning

by

Andrew D. Althouse, BS, (ME), MA
Carl H. Turnquist, BS, (ME), MA
Alfred F. Bracciano, BS, M.Ed., Ed. Sp.
Daniel C. Bracciano, BSME
Gloria M. Bracciano, BA, MA, Ed. Sp.

Publisher
The Goodheart-Willcox Company, Inc.
Tinley Park, IL
www.g-w.com

Copyright © 2017
by
The Goodheart-Willcox Company, Inc.

Previous editions copyright 2014, 2004, 2000, 1996, 1992, 1988, 1982, 1979, 1975, 1968, 1960, 1958, 1956, 1950, 1944, 1943, 1939, 1936, 1933

All rights reserved. No part of this work may be reproduced, stored, or transmitted in any form or by any electronic or mechanical means, including information storage and retrieval systems, without the prior written permission of The Goodheart-Willcox Company, Inc.

Manufactured in the United States of America.

Library of Congress Catalog Card Number 2015039667

ISBN 978-1-63126-354-5

4 5 6 7 8 9 – 17 – 20 19 18

The Goodheart-Willcox Company, Inc. Brand Disclaimer: Brand names, company names, and illustrations for products and services included in this text are provided for educational purposes only and do not represent or imply endorsement or recommendation by the author or the publisher.

The Goodheart-Willcox Company, Inc. Safety Notice: The reader is expressly advised to carefully read, understand, and apply all safety precautions and warnings described in this book or that might also be indicated in undertaking the activities and exercises described herein to minimize risk of personal injury or injury to others. Common sense and good judgment should also be exercised and applied to help avoid all potential hazards. The reader should always refer to the appropriate manufacturer's technical information, directions, and recommendations; then proceed with care to follow specific equipment operating instructions. The reader should understand these notices and cautions are not exhaustive.

The publisher makes no warranty or representation whatsoever, either expressed or implied, including but not limited to equipment, procedures, and applications described or referred to herein, their quality, performance, merchantability, or fitness for a particular purpose. The publisher assumes no responsibility for any changes, errors, or omissions in this book. The publisher specifically disclaims any liability whatsoever, including any direct, indirect, incidental, consequential, special, or exemplary damages resulting, in whole or in part, from the reader's use or reliance upon the information, instructions, procedures, warnings, cautions, applications, or other matter contained in this book. The publisher assumes no responsibility for the activities of the reader.

The Goodheart-Willcox Company, Inc. Internet Disclaimer: The Internet resources and listings in this Goodheart-Willcox Publisher product are provided solely as a convenience to you. These resources and listings were reviewed at the time of publication to provide you with accurate, safe, and appropriate information. Goodheart-Willcox Publisher has no control over the referenced websites and, due to the dynamic nature of the Internet, is not responsible or liable for the content, products, or performance of links to other websites or resources. Goodheart-Willcox Publisher makes no representation, either expressed or implied, regarding the content of these websites, and such references do not constitute an endorsement or recommendation of the information or content presented. It is your responsibility to take all protective measures to guard against inappropriate content, viruses, or other destructive elements.

Cover images: Emerson Climate Technologies; Arkema, Inc.; Stride Tool Inc.; Danfoss; Tempstar
Back cover image: Ritchie Engineering Co., Inc. – YELLOW JACKET Products Division

Library of Congress Cataloging-in-Publication Data

Names: Althouse, Andrew D., author. | Turnquist, Carl H., author. | Bracciano, Alfred F., author. | Bracciano, Daniel C., author. | Bracciano, Gloria M., author.

Title: Modern refrigeration and air conditioning / by Andrew D. Althouse, Carl H. Turnquist, Alfred F. Bracciano, Daniel C. Bracciano, Gloria M. Bracciano.

Description: 20th edition. | Tinley Park, IL : The Goodheart-Willcox Company, Inc., [2017] | Includes index.

Identifiers: LCCN 2015039667 | ISBN 9781631263545

Subjects: LCSH: Refrigeration and refrigerating machinery. | Air conditioning.

Classification: LCC TP492 .A43 2017 | DDC 621.5/6--dc23 LC record available at http://lccn.loc.gov/2015039667

Preface

Modern Refrigeration and Air Conditioning is the standard for a new generation of learner. This classic is an excellent blend of theory, skill development, and service techniques to help you learn how to install and service refrigeration and HVAC systems. ***Modern Refrigeration and Air Conditioning*** delivers comprehensive and authoritative content on the basic and advanced principles of refrigeration and air conditioning, provides excellent instruction and training in the skills and techniques essential for servicing and troubleshooting, and emphasizes career opportunities, workplace skills, and safety.

The content in ***Modern Refrigeration and Air Conditioning*** is correlated to the curriculum guides and competencies used for HVAC Excellence and PAHRA program accreditation. The accreditation curriculum dovetails with entry-level and professional certification exam requirements. Thus, ***Modern Refrigeration and Air Conditioning*** is a valuable resource as you begin your journey toward entry-level certification, employment, professional certification, and career advancement.

Modern Refrigeration and Air Conditioning has been carefully designed and crafted to make your learning experience effective and efficient. Concepts are explained clearly and simply, with text narrative supported by numerous engaging and attractive illustrations. The preview and review features in each chapter—*Chapter Outline*, *Technical Terms* list, *Review of Key Concepts*, and *Summary*—help you quickly master HVACR concepts and topics.

This 20th edition incorporates many changes:

- New technical updates include added information on variable refrigerant flow (VRF) systems, microchannel heat exchangers, variable frequency drives, thermostat diagnostics, HC and HFO refrigerants, and additional *Code Alert* features. New and updated content focusing on energy efficiency includes air-side economizers and multistage and zoning thermostats.
- Over 400 new images and illustrations have been added throughout the textbook.
- A new *Careers and Certification* chapter and new *Service Call Scenario* features provide you with an overview of career opportunities available in the HVACR industry and an introduction to workplace skills that will help you succeed in your career goals.
- A new *Safety* chapter provides an overview of safety-related topics to complement the strong, existing contextual safety information located throughout the chapters.

In the coming years, the number of new positions in the HVACR industry combined with open positions due to retirements is expected to be significantly greater than the number of new employees entering the field. This will create a shortage of trained workers and a surplus of employment opportunities. You are entering the HVACR field at an ideal time, and ***Modern Refrigeration and Air Conditioning*** will be a fantastic resource for you as you build your career!

About the Authors

Andrew D. Althouse received his engineering degree from the University of Michigan. He was the Assistant Director of the Vocational Education Department at Cass Technical High School in Detroit and later became the Supervisor of Vocational Education for Detroit. As a leader in the field, he and his coauthor Carl Turnquist created one of the first training programs in refrigeration while at Cass Technical High School. Andy, as he was known, created the first technical training course in refrigeration for industry. The instructional materials used in this first course became the foundation for the textbook *Modern Electric and Gas Refrigeration*, which was published in 1933. Mr. Althouse was a Member of the American Society of Refrigerating Engineers.

Carl H. Turnquist earned his engineering degree from Wayne State University in Detroit and, along with Mr. Althouse, developed one of the earliest training programs to provide instruction for mechanical refrigeration for the automotive industry and for railroad passenger cars. With industry support, Carl's program flourished as the demand for skilled technicians in this new field expanded. The *Modern Electric and Gas Refrigeration* book was revised every three to five years as new equipment was developed. The title of the book was eventually changed to ***Modern Refrigeration and Air Conditioning***. Mr. Turnquist was an Associate Member of the American Society of Refrigerating Engineers.

Alfred Bracciano received a bachelor of science degree in Industrial Education with Certification in Vocational Education from Wayne State University in Michigan. He also earned a master's degree in Secondary Education and a Specialist degree in Administration and Supervision.

Mr. Bracciano was employed as a teacher of Refrigeration and Air Conditioning for twelve years. He then became Director of Career and Technical Education for Warren Consolidated Schools in Warren, Michigan. He taught Community Resources Workshops for Michigan State University and presented at conferences throughout the country.

Mr. Bracciano is a life member of the American Society of Heating, Refrigerating and Air-Conditioning Engineers (ASHRAE), Refrigeration Service Engineers Society (RSES), Association for Career and Technical Education (ACTE), and the American Technical Education Association (ATEA).

Dan Bracciano graduated from Oakland University in Rochester Hills, Michigan, with a bachelor of science degree in Mechanical Engineering. He began his career in HVACR at the Warren Schools Career Center, graduating in HVACR, and worked in the HVACR field performing residential and commercial HVACR installations and service.

Dan has over twenty-five years of experience working in design development and manufacture of HVAC systems for Fiat/Chrysler, General Motors, Mitsubishi Climate Control, and Alternative Energy Corporation. He holds several patents in the field, including a patent for a Modular Hermetic HVAC system. Dan is a member of the American Society of Heating, Refrigerating and Air-Conditioning Engineers (ASHRAE) and the Mobile Air Conditioning Society (MACS).

Gloria Bracciano received a bachelor's degree in Education, a master's degree in Curriculum and Instruction, and an education specialist degree in Administrative Leadership. She completed coursework in Heating, Ventilation, Air Conditioning, and Refrigeration through Oakland and Macomb Community Colleges.

Ms. Bracciano has worked in the field of education for over twenty-five years and has held positions as both university professor and administrator. She has also served as the Provost of Gulliver Schools. Ms. Bracciano specializes in development and implementation of innovative curriculums and has presented at local, state, and national conferences.

Ms. Bracciano is a member of the American Society of Heating, Refrigerating and Air-Conditioning Engineers (ASHRAE), Refrigeration Service Engineers Society (RSES), and the American Technical Education Association (ATEA).

The authors and publisher wish to thank Connie Habermehl, Administrative Assistant for Associated Technical Authors, for her contributions to this and previous editions of ***Modern Refrigeration and Air Conditioning***.

Reviewers

The authors and publisher wish to thank the industry and teaching professionals listed below for their valuable input into the development of ***Modern Refrigeration and Air Conditioning***. The authors and publisher wish to express particular gratitude to the following individuals:

Dr. Christopher Molnar, of Porter and Chester Institute, for writing three sections for and providing a detailed technical review of the thermostats chapter.

Greg Jourdan, of Wenatchee Valley College, for his detailed technical review of the electrical controls systems and energy management content.

Don Crawshaw, of Salt Lake Community College, for his detailed review of commercial refrigeration chapters.

Randy F. Petit, Sr., of HVAC Excellence, for his extensive review and suggestions.

Howard Weiss, of HVAC Excellence, for his detailed review of certification and industry association and general guidance.

Jerry Weiss, **Thomas Tebbe**, and **Coy Gibson**, all of HVAC Excellence, and **Warren Lupson**, of PAHRA/AHRI, for their frequent and generous contributions of guidance and wisdom.

Anthony L. Baham
South Central Louisiana Technical College
Morgan City, Louisiana

David Blais
Ivy Tech Community College
Indianapolis, Indiana

Terry Bradwell
Midlands Technical College
West Columbia, South Carolina

Stevan Brasel
Moraine Valley Community College
Palos Hills, Illinois

Michael Brock
Florida Coast Career Tech/Florida State College at Jacksonville
Jacksonville, Florida

Mark R. Buller
British Columbia Institute of Technology
Burnabay, British Columbia, Canada

Danny Burris
Eastfield College of the Dallas County Community College District
Mesquite, Texas

Terry Carmouche
South Central Louisiana Technical College
Reserve, Louisiana

Michael Chandlee
Tennessee Technology Center at Pulaski
Pulaski, Tennessee

James Conway
Lindsey-Cooper Refrigeration School
Irving, Texas

Rick Dorssom
Hillyard Technical Center
St. Joseph, Missouri

Patrick Duschl
Fortis College
Cincinnati, Ohio

George Frank
British Columbia Institute of Technology
Burnaby, British Columbia, Canada

Rod Fronk
Wichita Technical Institute
Topeka, Kansas

David W. Fuller
Clovis Community College/Air One HVAC Sales and Service
Clovis, New Mexico/Portales, New Mexico

Tim Gohdes
Central Texas College
Killeen, Texas

Brad Guthrie
Front Range Community College
Fort Collins, Colorado

Marvin J. Hamel
Locklin Technical Center
Milton, Florida

James H. Hanway
Northland Career Center
Platte City, Missouri

Gary L. Harrison
AG&H Contractors LLC
Baton Rouge, Louisiana

Patrick Heeb
Long Beach City College
Long Beach, California

John Henry
Diablo Valley College
Pleasant Hill, California

John P. Ingram
Northwest Community College
Senatobia, Mississippi

Gordan Jacoby
Milwaukee Area Technical College
Oak Creek, Wisconsin

Robert Johnson
Amarillo College
Amarillo, Texas

Nick Kyriakopedi
Laney College
Oakland, California

Aaron Latty
Robert Morgan Educational Center
Miami, Florida

Mark Loan
Red River College
Winnipeg, Manitoba, Canada

Raul Lopez
Houston Community College
Houston, Texas

Barbara MacQueen
Vancouver Island University
Cowichan Campus, British Columbia, Canada

Rick Marks
Cisco College
Abilene, Texas

Gary Marowske
Flame Heating, Cooling, Plumbing & Electrical
Warren, Michigan

James Martini
Henry Ford Community College
Dearborn, Michigan

Todd Matsuba
Northern Alberta Institute of Technology
Edmonton, Alberta, Canada

Richard McDonald
Santa Fe College
Gainesville, Florida

John L. Mulder
Roanoke-Chowan Community College
Ahoskie, North Carolina

Patrick Murphy
Quinn-Murphy Consulting, LLC
Spring Lake, New Jersey

Keith J. Otten
Southwestern Illinois College
Belleville, Illinois

Joseph G. Owens
Antelope Valley College
Lancaster, California

Jeffrey Patronek
Alfred State/SUNY College of Technology
Alfred, New York

Joseph Pellecchia
Platt Regional Vocational Technical School
Milford, Connecticut

Whit Perry
Northwest Mississippi Community College
Senatobia, Mississippi

Jesse R. Riojas
Oakland Community College
Auburn Hills, Michigan

Terry Robinson
Lincoln Technical Institute
Grand Prairie, Texas

Terry Rogers
Midlands Technical College
West Columbia, South Carolina

Doug Sallade
Cypress College
Cypress, California

Thomas E. Shiflet
Greenville Technical College
Greenville, South Carolina

Allen Smith
College of Lake County
Grayslake, Illinois

Stephen V. Spletzer
Arkema Inc.
King of Prussia, Pennsylvania

Donald Steeby
Grand Rapids Community College
Grand Rapids, Michigan

Richard C. Taylor
Pennsylvania College of Technology
Willamsport, Pennsylvania

Mark Tyrrell
Franklin Technical Center
Joplin, Missouri

Glenn Walsh
British Columbia Institute of Technology
Burnaby, British Columbia, Canada

Chad Wheat
Georgia Northwestern Technical College
Rome, Georgia

Gerald L. Williamson
Montgomery College
Rockville, Maryland

Harold Wynn
Wichita Technical Institute
Joplin, Missouri

Robert G. Young
Autry Technology Center
Enid, Oklahoma

Brian Youngblood
Atlantic Technical Center
Coconut Creek, Florida

Acknowledgments

The authors and publisher would like to thank the following companies, organizations, and individuals for their contribution of resource material, images, or other support in the development of ***Modern Refrigeration and Air Conditioning***.

A-1 Components Corporation
AAON
ABB Stal Refrigeration Corporation
Abbeon Cal, Inc.
ACCA – The Indoor Environment & Energy Efficiency Association
Aeroquip Corporation
AlCoil, Inc.
Alerton
Alfa Laval Inc.
All American Heating & Cooling
Allanson Inc.
Alto-Shaam, Inc.
Amana Refrigeration, Inc.
American Saw & Mfg. Company
Amprobe
Andersen Corp.
A. O. Smith
Appion, Inc.
Arkema, Inc.
Armacell LLC
Arzel Zoning Technology, Inc.
Bacharach, Inc.
Bally Refrigerated Boxes, Inc.
Baltimore Aircoil Company
BernzOmatic
Bitzer
Blissfield Manufacturing
Bosch Thermotechnology Corp.
BouMatic
Braeburn Systems LLC
Bristol Compressors, Inc.
Cadet Manufacturing Co.
Caleffi North America, Inc.
CALMAC Manufacturing Corporation
Camfil Farr Co.
Carel Industries
Carlin Combustion Technology, Inc.
Carrier Corporation, Subsidiary of United Technologies Corp.
Carrier Transicold Division, Carrier Corp.
CCI Thermal Technologies Inc.
CertainTeed Corporation
ClimateMaster
CMP Corporation
Comfortmaker GNJ, International Comfort Products Corporation
Continental Industries, Inc.
Control Resources, Inc.
Control4 Corporation
Cooper Tools, Nicholson
Copeland Corporation
Corken Steel Products
Cyber Prodigy LLC
Daikin Applied
Danfoss
DENSO Sales California, Inc.
Dial Manufacturing, Inc.
Dispensed Water Div. of Elkay Mfg. Co.
DiversiTech Corporation
DuctSox Corporation
Dunham-Bush, Inc.
DuPont Company
DuPont Energy Management Co., Inc.
Dwyer Instruments, Inc.
Dynatemp International, Inc.
EarthLinked Technologies, Inc.
Elite Soft Inc.
Emerson Climate Technologies
Emerson Electric Co.
Extech Instruments Corp.
Fedders North America, Inc.
Fenwal Controls
Field Controls, LLC
Flame Heating, Cooling, Plumbing & Electrical
Fluke Corporation
Frigidaire
Frigidaire Company
Fujitsu General America, Inc.
Fusite
Gates Corporation
GEA Heat Exchangers
General Filters, Inc.
Goodman Manufacturing Company
Goodway Technologies Corp.
Grasslin Controls Corporation
GrayWolf Sensing Solutions, LLC
Haier America
Hampden Engineering
Harris Group
Hartford Compressors, Inc.
Heat Controller, Inc.
Henry Technologies, Inc.
Hill Phoenix, Inc.
hilmor
Hi-Velocity Systems
Honeywell, Inc.
Hoshizaki America, Inc.
Hussmann Corporation
Ice Energy, Inc.
Ice-O-Matic
Ideal Industries, Inc.
Imperial
INFICON
Insteon
Invensys Climate Controls Americas
ITT McDonnell & Miller
ITW Vortec
Jackson Systems, LLC
Jenn-Air

Johnson Controls, Inc.
JugLugger
KE Fibertec NA, Inc.
Kenmore
Kennametal, Inc.
King Electrical Mfg. Co.
Klein Tools, Inc.
Kysor//Warren
LA-CO Industries Inc.
Lancer Corporation
Lennox Industries Inc.
LG Appliances
Lordan A.C.S. Ltd
Ludeca, Inc.
Luvata
Manchester Tank
Mastercool Inc.
Maytag Corporation
McQuay International
Mestek Machinery
Micro Switch, Div. of Honeywell, Inc.
Midco International, Inc.
Milwaukee Electric Tool Corp.
Mitsubishi Electric, HVAC Advanced Products Division
Mueller Industries, Inc.
Mueller Refrigeration Company, Inc.
National Air Duct Cleaners Association (NADCA)
National Cancer Institute
National Weather Service
Nest Labs, Inc.
NexRev Inc.
NORA
North American Technician Excellence
OSHA
Owens Corning
Ozone Solutions, Inc.
Pacific Transducer Corp.
Packless Industries
Paragon, Invensys Climate Controls Americas
Parker Hannifin Corporation
PB Heat, LLC
Peerless of America, Inc.
Malcolm Prather
QMark, A Division of Marley Electric Heating
R.W. Beckett Corporation
Ranco, Invensys Climate Controls Americas
Raymon-Donco Corp.
Raypak, Inc.
RectorSeal
Reed Manufacturing Co.
Refrigeration Technologies
REMIS AMERICA, LLC
RenewAire
Rheem Manufacturing Company
Ritchie Engineering Co., Inc. – YELLOW JACKET Products Division
Robinair, SPX Corporation
Robur Corporation
RTCA—Radon Testing Corp of America, Inc.
Runtal North America
Scale Free International
Schneider Electric
Scotsman Ice Systems
Sealed Unit Parts Co., Inc.
Selco Products Company
Sherwood Valve
Siebe Environmental Controls, Invensys Climate Controls Americas
Skuttle IAQ Products
Snap-On Inc.
Spectronics Corporation
SpeedClean
Sporlan Division - Parker Hannifin Corporation
Sprinkool Systems International, Inc.
SPX Corporation
SRC Refrigeration
SSAC, LLC
Standard Refrigeration Co.
Steinen Nozzles
Steril-Aire, Inc.
Steven Shepler
Stride Tool Inc.
Suburban Manufacturing
Sub-Zero/Wolf Appliance
Sun Spot Solar and Heating, Inc.
Superior Refrigeration Products
Sweden-Alco Dispensing Systems, a Div. of Alco Foodservice Equipment Co.
TEC (The Energy Conservatory)
Tecogen, Inc.
Tecumseh Products Company
Tempstar
Texas Instruments, Inc.
The Coleman Company, Inc.
The Energy Conservatory
The Trane Co.
Thermo King Corporation
Thermostat Recycling Corporation
TIF™ Instruments, Inc.
Tjernlund Products, Inc.
Trane, a brand of Ingersoll Rand
Transcold Distribution, Ltd.
Transducers Direct, LLC.
Traulsen Refrigeration
TSI Incorporated
Tutco, Inc.
U.S. Cooler Company
Uline
Ullman Devices Corporation
United States Federal Trade Commission
Uniweld Products, Inc.
Uponor, Inc.
US Department of Energy—DOE
Veco NA – Coastal Climate Control, Inc.
Venstar
Virginia KMP Corp.
WaterFurnace International, Inc.
Webster Fuel Pumps and Valves
Westermeyer Industries, Inc.
Westwood Products, Inc.
Whirlpool Corporation
White-Rodgers Division, Emerson Climate Technologies
Wittern Group
Women in HVACR
Worthington Industries
Xylem Inc.
York International Corp.
Zero Zone, Inc.
Zettler Controls, Inc.
ZONEFIRST

G-W Integrated Learning Solution

Together, We Build Careers

At Goodheart-Willcox, we take our mission seriously. Since 1921, G-W has been serving the career and technical education (CTE) community. Our employee-owners are driven to deliver exceptional learning solutions to CTE students to help prepare them for careers. Our authors and subject matter experts have years of experience in the classroom and industry. We combine their wisdom with our expertise to create content and tools to help students achieve success. Our products start with theory and applied content based on a strong foundation of accepted standards and curriculum. To that base, we add student-focused learning features and tools designed to help students make connections between knowledge and skills. G-W recognizes the crucial role instructors play in preparing students for careers. We support educators' efforts by providing time-saving tools that help them plan, present, assess, and engage students with traditional and digital activities and assets. We provide an entire program of learning in a variety of print, digital, and online formats, including economic bundles, allowing educators to select the perfect mix for their classroom.

Student-Focused Curated Content

Goodheart-Willcox believes that student-focused content should be built from standards and accepted curriculum coverage. Standards from HVAC Excellence and PAHRA/AHRI were used as a foundation for this text. ***Modern Refrigeration and Air Conditioning*** also uses a building block approach with attention devoted to a logical teaching progression that helps students build on their learning. We call on industry experts and instructors from across the country to review and comment on our content, presentation, and pedagogy. Finally, in our refinement of curated content, our editors are immersed in content checking, securing and sometimes creating figures that convey key information, and revising language and pedagogy.

Curriculum Correlations

Modern Refrigeration and Air Conditioning aligns with curriculum standards for HVAC Excellence and PAHRA accreditation.

HVAC Excellence is a not-for-profit organization that serves the HVACR industry with the goal of supporting and improving HVACR education and training. HVAC Excellence provides many services to HVACR education and training, including awarding program accreditation, professional certifications, and instructor credentials.

The Partnership for Air-Conditioning, Heating, and Refrigeration Accreditation (PAHRA) is an independent, third-party organization that is a partnership between HVACR educators and the HVACR industry. PAHRA awards accreditation to programs that meet or exceed industry-validated standards developed by AHRI.

To see how ***Modern Refrigeration and Air Conditioning*** correlates to HVAC Excellence and AHRI standards, please visit www.g-w.com/modern-refrigeration-air-conditioning-2017 and click on the Correlations tab. For more information on PAHRA and HVAC Excellence, please visit www.pahrahvacr.org and www.hvacexcellence.org.

PAHRA
Partnership for Air Conditioning, Heating, Refrigeration Accreditation

HVAC Excellence™

Features of the Textbook

Features are student-focused learning tools designed to help you get the most out of your studies. This visual guide highlights the features designed for the textbook.

Technical Terms list the key terms to be learned in the chapter. Review this list after completing the chapter to be sure you know the definition of each term.

Review of Key Concepts states previously covered facts related to the topics in the chapter. A chapter reference is provided so you can go back and review the topic in more detail.

422

CHAPTER 18 Compressors

Chapter Outline

18.1 Compressor Drive Configurations
- 18.1.1 Open-Drive Compressors
- 18.1.2 Hermetic Compressors

18.2 Types of Compressors
- 18.2.1 Reciprocating Compressors
- 18.2.2 Rotary Compressors
- 18.2.3 Scroll Compressors
- 18.2.4 Screw Compressors
- 18.2.5 Centrifugal Compressors

18.3 General Compressor Components and Systems
- 18.3.1 Service Valves
- 18.3.2 Mufflers
- 18.3.3 Compressor Cooling Systems
- 18.3.4 Lubrication Systems
- 18.3.5 Unloaders
- 18.3.6 Sealing Devices
- 18.3.7 Crankcase Heaters

Learning Objectives

Information in this chapter will enable you to:

- Summarize the design differences between open-drive compressors, fully hermetic compressors, and semi-hermetic compressors.
- Identify the components of a reciprocating piston compressor and summarize their functions.
- Understand how a Scotch yoke type of reciprocating compressor works.
- Explain how a rotary compressor works.
- Summarize the differences between rotating vane and stationary blade rotary compressors.
- Understand how a scroll compressor works.
- Explain how a screw compressor works.
- Identify the components of a centrifugal compressor and summarize their functions.
- Identify and explain the purpose of compressor cooling and lubrication systems, mufflers, and crankcase heaters.

Chapter 18 Compressors 423

Technical Terms

belt-driven compressor
booster compressor
centrifugal compressor
centrifugal force
clearance space
compression ring
connecting rod
crankcase
crankcase heater
crankshaft
cylinder head
direct-drive compressor
eccentric
hermetic compressor
impeller
muffler
oil ring
oil slugging
open-drive compressor
O-ring
piston
piston pin
piston ring
pressure lubrication system
reciprocating compressor
rotary compressor
Scotch yoke
screw compressor
scroll compressor
semi-hermetic compressor
shaft seal
splash system
stator
unloader
valve plate
volute

Review of Key Concepts

Reviewing these concepts from earlier chapters will help you understand new concepts presented in this chapter:

- A gas is a physical substance with no definite shape or volume, which expands to fill its container. (Chapter 5)
- As a gas is compressed, its pressure and temperature rise. This is due to the energy added to the gas by compression. The energy added is often termed the heat of compression. (Chapter 5)
- The combined gas law states that the ratio between a gas's pressure, volume, and temperature remains constant. (Chapter 5)
- A compressor draws in low-pressure vapor from the low side of the system, compresses it, and discharges high-pressure vapor into the high side of the system. (Chapter 6)

Introduction

The compressor is the "heart" of a refrigeration system. It compresses low-temperature and low-pressure refrigerant vapor into a much smaller volume. As the refrigerant is compressed into a smaller volume, its temperature and pressure increase. The pressure is increased from a low-pressure level (suction) at the compressor's inlet to a high-pressure level (discharge) at the compressor's outlet. Cool refrigerant enters the compressor through the suction valve. The refrigerant contains the heat that was absorbed when the refrigerant vaporized in the evaporator. The compressor pumps this vapor to the condenser, where the heat is released from the refrigerant as it condenses and subcools.

Chapter Outline provides a preview of the chapter topics and can also serve as a review tool.

Learning Objectives clearly identify the knowledge and skills to be obtained when the chapter is completed.

Introduction provides an overview and preview of the chapter content.

Thinking Green notes highlight key items related to sustainability, energy efficiency, and environmental issues.

Pro Tips provide you with advice and guidance that is especially applicable for on-the-job.

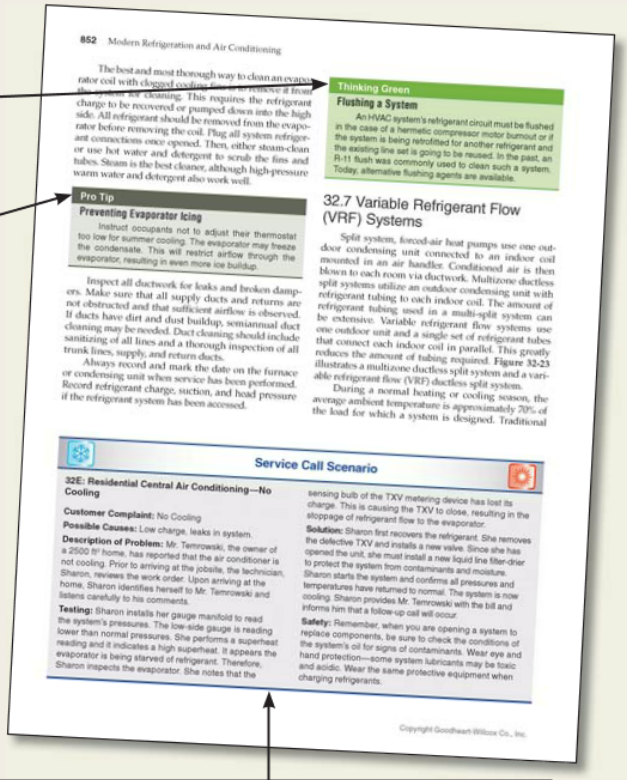

852 Modern Refrigeration and Air Conditioning

The best and most thorough way to clean an evaporator coil with clogged cooling fins is to remove it from the system for cleaning. This requires the refrigerant charge to be recovered or pumped down into the high side. All refrigerant should be removed from the evaporator before removing the coil. Plug all system refrigerant connections once opened. Then, either steam-clean or use hot water and detergent to scrub the fins and tubes. Steam is the best cleaner, although high-pressure warm water and detergent also work well.

Thinking Green

Flushing a System

An HVAC system's refrigerant circuit must be flushed in the case of a hermetic compressor motor burnout or if the system is being retrofitted for another refrigerant and the existing line set is going to be reused. In the past, an R-11 flush was commonly used to clean such a system. Today, alternative flushing agents are available.

Pro Tip

Preventing Evaporator Icing

Instruct occupants not to adjust their thermostat too low for summer cooling. The evaporator may freeze the condensate. This will restrict airflow through the evaporator, resulting in even more ice buildup.

Inspect all ductwork for leaks and broken dampers. Make sure that all supply ducts and returns are not obstructed and that sufficient airflow is observed. If ducts have dirt and dust buildup, semiannual duct cleaning may be needed. Duct cleaning should include sanitizing of all lines and a thorough inspection of all trunk lines, supply, and return ducts.

Always record and mark the date on the furnace or condensing unit when service has been performed. Record refrigerant charge, suction, and head pressure if the refrigerant system has been accessed.

32.7 Variable Refrigerant Flow (VRF) Systems

Split system, forced-air heat pumps use one outdoor condensing unit connected to an indoor coil mounted in an air handler. Conditioned air is then blown to each room via ductwork. Multizone ductless split systems utilize an outdoor condensing unit with refrigerant tubing to each indoor coil. The amount of refrigerant tubing used in a multi-split system can be extensive. Variable refrigerant flow systems use one outdoor unit and a single set of refrigerant tubes that connect each indoor coil in parallel. This greatly reduces the amount of tubing required. **Figure 32-23** illustrates a multizone ductless split system and a variable refrigerant flow (VRF) ductless split system.

During a normal heating or cooling season, the average ambient temperature is approximately 70% of the load for which a system is designed. Traditional

Service Call Scenario

32E: Residential Central Air Conditioning—No Cooling

Customer Complaint: No Cooling

Possible Causes: Low charge, leaks in system.

Description of Problem: Mr. Temrowski, the owner of a 2500 ft² home, has reported that the air conditioner is not cooling. Prior to arriving at the jobsite, the technician, Sharon, reviews the work order. Upon arriving at the home, Sharon identifies herself to Mr. Temrowski and listens carefully to his comments.

Testing: Sharon installs her gauge manifold to read the system's pressures. The low-side gauge is reading lower than normal pressures. She performs a superheat reading and it indicates a high superheat. It appears the evaporator is being starved of refrigerant. Therefore, Sharon inspects the evaporator. She notes that the sensing bulb of the TXV metering device has lost its charge. This is causing the TXV to close, resulting in the stoppage of refrigerant flow to the evaporator.

Solution: Sharon first recovers the refrigerant. She removes the defective TXV and installs a new valve. Since she has opened the unit, she must install a new liquid line filter-drier to protect the system from contaminants and moisture. Sharon starts the system and confirms all pressures and temperatures have returned to normal. The system is now cooling. Sharon provides Mr. Temrowski with the bill and informs him that a follow-up call will occur.

Safety: Remember, when you are opening a system to replace components, be sure to check the conditions of the system's oil for signs of contaminants. Wear eye and hand protection—some system lubricants may be toxic and acidic. Wear the same protective equipment when charging refrigerants.

Copyright Goodheart-Willcox Co., Inc.

Service Call Scenarios present on-the-job situations in which a service technician receives a description of a problem, tests the system, and provides a solution.

122 Modern Refrigeration and Air Conditioning

7.2 Power Tools

Hand tools are used throughout HVACR work on an everyday basis. However, some jobs progress more quickly or smoothly with the use of power tools. An industry as diverse as HVACR requires a variety of power tools.

Electric drills are one of the most commonly used power tools. An electric motor rotates a shaft that may be fitted with a variety of bits. Electric drills are used for installation, retrofit, and service work. When drilling into particularly hard surfaces like concrete or other masonry, it may be better to use a hammer drill, **Figure 7-45**.

Safety Note

Electrical Drill Ground

Electric drills should be grounded for safety. Most electric drills are equipped with a three-prong grounded plug. If the circuit to which the drill is connected does not have a three-prong grounded socket, a grounded adapter should be used. Some hand drills have the electric motor insulated from the case and do not need grounding. Grounding is covered further in Chapter 13, *Electrical Power*.

Close cousins of the electric drill are the impact driver and power screwdriver. These tools operate the same way as drills but for a different purpose. Drivers make the assembly and disassembly of units quick and efficient, **Figure 7-46**.

Safety Note

Eye Protection

Always wear safety glasses to protect your eyes from flying chips when using either a drill press or portable drill.

Milwaukee Electric Tool Corp.

Figure 7-45. This technician is using a hammer drill to make a hole in masonry.

Milwaukee Electric Tool Corp.

Figure 7-46. This technician is using an impact driver to quickly secure the hangers for this ductwork.

Not all holes can be cut and properly formed using hand tools or a hole saw on an electric drill. For larger holes and precise cuts, use a reciprocating saw. Though these tools can be used for a variety of jobs, reciprocating saws are especially handing when preparing to install ductwork and air registers in a building, **Figure 7-47**.

7.3 Instruments

The technician uses instruments to determine conditions, such as pressure and temperature, inside a refrigeration system. The most common instruments are thermometers and pressure gauges. Later chapters will cover specific types of pressure gauges and special instruments such as hygrometers, ammeters, voltmeters, and ohmmeters.

An instrument must be carefully handled and kept in good condition if it is to remain accurate. If its accuracy is in doubt, the instrument should be sent to a repair company for testing and calibration (adjustment).

7.3.1 Thermometers

A ***thermometer*** is an instrument for measuring temperature. In HVACR, a thermometer is often used to measure the temperature of an evaporator, liquid line, suction line, return air, or supply air. An ice water bath can be used to check a thermometer's

Copyright Goodheart-Willcox Co., Inc.

Safety Notes alert you to potentially dangerous materials and practices.

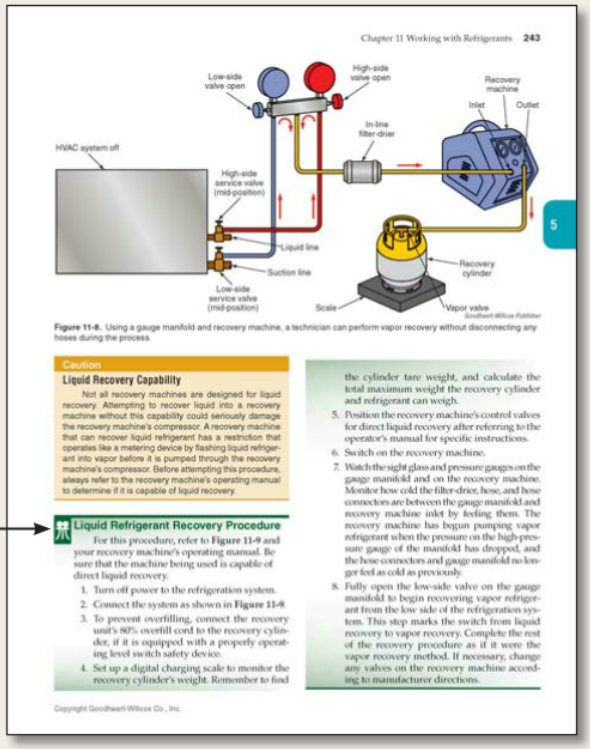

Chapter 11 Working with Refrigerants 243

Figure 11-8. Using a gauge manifold and recovery machine, a technician can perform vapor recovery without disconnecting any hoses during the process.

Caution

Liquid Recovery Capability

Not all recovery machines are designed for liquid recovery. Attempting to recover liquid into a recovery machine without this capability could seriously damage the recovery machine's compressor. A recovery machine that can recover liquid refrigerant has a restriction that operates like a metering device by flashing liquid refrigerant into vapor before it is pumped through the recovery machine's compressor. Before attempting this procedure, always refer to the recovery machine's operating manual to determine if it is capable of liquid recovery.

Liquid Refrigerant Recovery Procedure

For this procedure, refer to **Figure 11-9** and your recovery machine's operating manual. Be sure that the machine being used is capable of direct liquid recovery.

1. Turn off power to the refrigeration system.
2. Connect the system as shown in **Figure 11-9**.
3. To prevent overfilling, connect the recovery unit's 80% overfill cord to the recovery cylinder, if it is equipped with a properly operating level switch safety device.
4. Set up a digital charging scale to monitor the recovery cylinder's weight. Remember to find the cylinder tare weight, and calculate the total maximum weight the recovery cylinder and refrigerant can weigh.
5. Position the recovery machine's control valves for direct liquid recovery after referring to the operator's manual for specific instructions.
6. Switch on the recovery machine.
7. Watch the sight glass and pressure gauges on the gauge manifold and on the recovery machine. Monitor how cold the filter-drier, hose, and hose connectors are between the gauge manifold and recovery machine inlet by feeling them. The recovery machine has begun pumping vapor refrigerant when the pressure on the high-pressure gauge of the manifold has dropped, and the hose connectors and gauge manifold no longer feel as cold as previously.
8. Fully open the low-side valve on the gauge manifold to begin recovering vapor refrigerant from the low side of the refrigeration system. This step marks the switch from liquid recovery to vapor recovery. Complete the rest of the recovery procedure as if it were the vapor recovery method. If necessary, change any valves on the recovery machine according to manufacturer directions.

Copyright Goodheart-Willcox Co., Inc.

Step-by-Step Procedures are highlighted throughout the textbook to provide clear instructions for hands-on service activities. You can refer back to these procedures easily.

Code Alerts point out specific information and requirements from environmental regulations and applicable building codes.

Cautions alert you to practices that could potentially damage equipment or instruments.

Illustrations have been designed to clearly and simply communicate the specific topic.

Color Coding is applied consistently to clearly communicate system conditions and components.

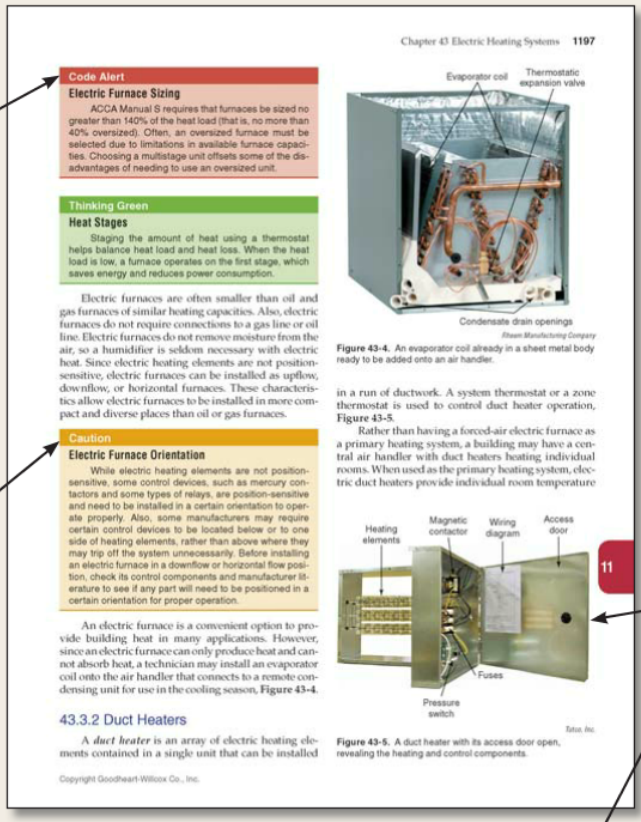

Chapter 43 Electric Heating Systems 1197

Code Alert

Electric Furnace Sizing

ACCA Manual S requires that furnaces be sized no greater than 140% of the heat load (that is, no more than 40% oversized). Often, an oversized furnace must be selected due to limitations in available furnace capacities. Choosing a multistage unit offsets some of the disadvantages of needing to use an oversized unit.

Thinking Green

Heat Stages

Staging the amount of heat using a thermostat helps balance heat load and heat loss. When the heat load is low, a furnace operates on the first stage, which saves energy and reduces power consumption.

Electric furnaces are often smaller than oil and gas furnaces of similar heating capacities. Also, electric furnaces do not require connections to a gas line or oil line. Electric furnaces do not remove moisture from the air, so a humidifier is seldom necessary with electric heat. Since electric heating elements are not position-sensitive, electric furnaces can be installed as upflow, downflow, or horizontal furnaces. These characteristics allow electric furnaces to be installed in more compact and diverse places than oil or gas furnaces.

Caution

Electric Furnace Orientation

While electric heating elements are not position-sensitive, some control devices, such as mercury contactors and some types of relays, are position-sensitive and need to be installed in a certain orientation to operate properly. Also, some manufacturers may require certain control devices to be located below or to one side of heating elements, rather than above where they may trip off the system unnecessarily. Before installing an electric furnace in a downflow or horizontal flow position, check its control components and manufacturer literature to see if any part will need to be positioned in a certain orientation for proper operation.

An electric furnace is a convenient option to provide building heat in many applications. However, since an electric furnace can only produce heat and cannot absorb heat, a technician may install an evaporator coil onto the air handler that connects to a remote condensing unit for use in the cooling season, **Figure 43-4**.

43.3.2 Duct Heaters

A *duct heater* is an array of electric heating elements contained in a single unit that can be installed in a run of ductwork. A system thermostat or a zone thermostat is used to control duct heater operation, **Figure 43-5**.

Rather than having a forced-air electric furnace as a primary heating system, a building may have a central air handler with duct heaters heating individual rooms. When used as the primary heating system, electric duct heaters provide individual room temperature

Copyright Goodheart-Willcox Co., Inc.

Figure 43-4. An evaporator coil already in a sheet metal body ready to be added onto an air handler.

Figure 43-5. A duct heater with its access door open, revealing the heating and control components.

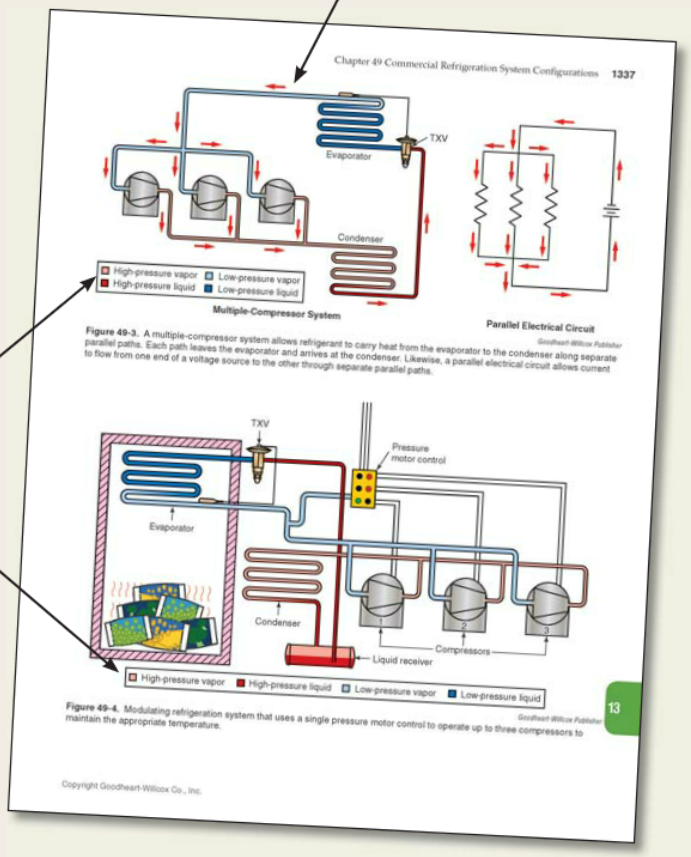

Chapter 49 Commercial Refrigeration System Configurations 1337

Figure 49-3. A multiple-compressor system allows refrigerant to carry heat from the evaporator to the condenser along separate parallel paths. Each path leaves the evaporator and arrives at the condenser. Likewise, a parallel electrical circuit allows current to flow from one end of a voltage source to the other through separate parallel paths.

Figure 49-4. Modulating refrigeration system that uses a single pressure motor control to operate up to three compressors to maintain the appropriate temperature.

Copyright Goodheart-Willcox Co., Inc.

Review Questions allow you to demonstrate knowledge, identification, and comprehension of chapter material.

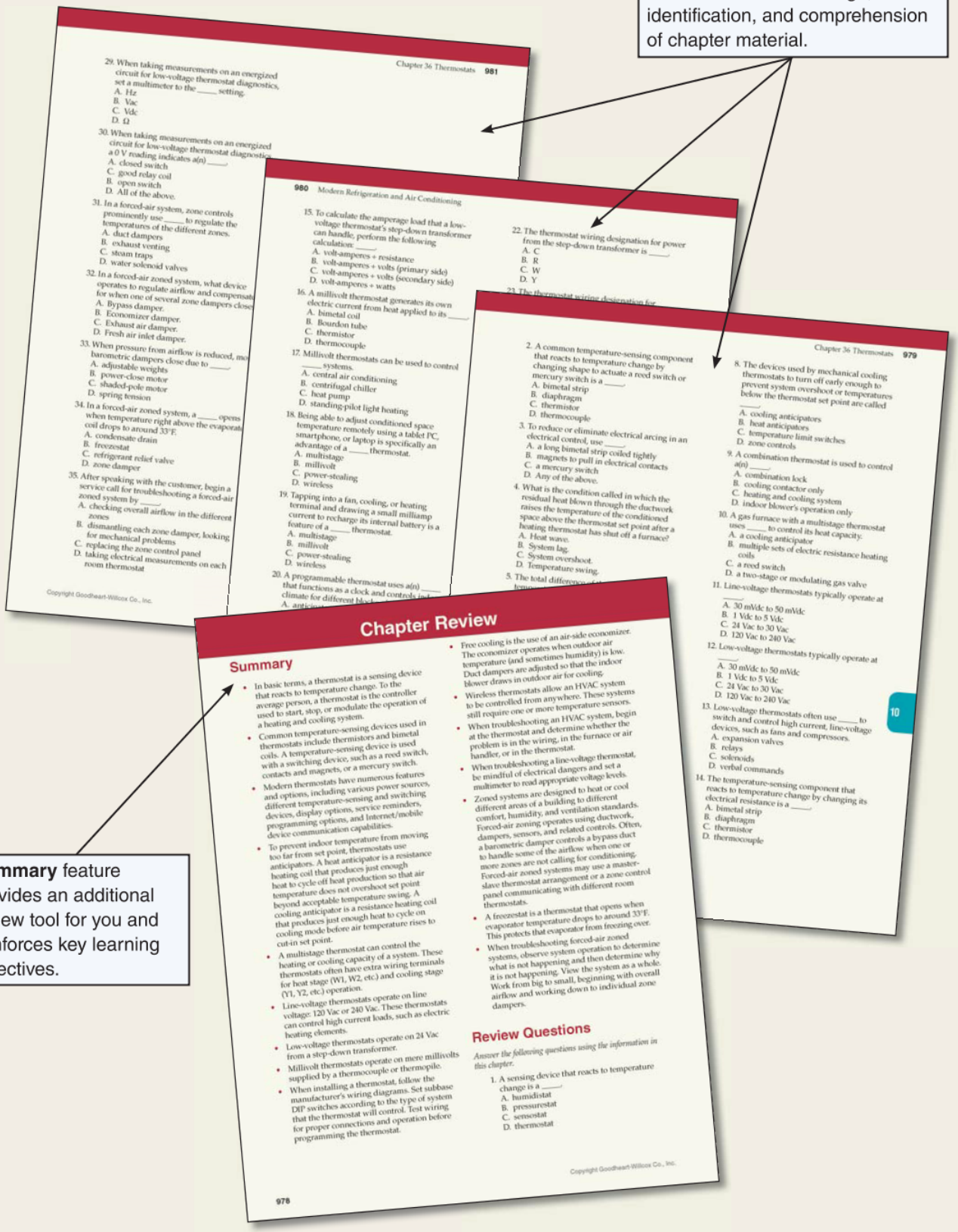

Chapter 36 Thermostats 981

29. When taking measurements on an energized circuit for low-voltage thermostat diagnostics, set a multimeter to the ____ setting.
A. Hz
B. Vac
C. Vdc
D. Ω

30. When taking measurements on an energized circuit for low-voltage thermostat diagnostics, a 0 V reading indicates a(n) ____.
A. closed switch
C. good relay coil
B. open switch
D. All of the above.

31. In a forced-air system, zone controls prominently use ____ to regulate the temperatures of the different zones.
A. duct dampers
B. exhaust venting
C. steam traps
D. water solenoid valves

32. In a forced-air zoned system, what device operates to regulate airflow and compensate for when one of several zone dampers close
A. Bypass damper.
B. Economizer damper.
C. Exhaust air damper.
D. Fresh air inlet damper.

33. When pressure from airflow is reduced, me barometric dampers close due to ____.
A. adjustable weights
B. power-close motor
C. shaded-pole motor
D. spring tension

34. In a forced-air zoned system, a ____ opens when temperature right above the evaporat coil drops to around 33°F.
A. condensate drain
B. freezestat
C. refrigerant relief valve
D. zone damper

35. After speaking with the customer, begin a service call for troubleshooting a forced-air zoned system by ____.
A. checking overall airflow in the different zones
B. dismantling each zone damper, looking for mechanical problems
C. replacing the zone control panel
D. taking electrical measurements on each room thermostat

Copyright Goodheart-Willcox Co., Inc.

980 Modern Refrigeration and Air Conditioning

15. To calculate the amperage load that a low-voltage thermostat's step-down transformer can handle, perform the following calculation: ____.
A. volt-amperes + resistance
B. volt-amperes + volts (primary side)
C. volt-amperes + volts (secondary side)
D. volt-amperes + watts

16. A millivolt thermostat generates its own electric current from heat applied to its ____.
A. bimetal coil
B. Bourdon tube
C. thermistor
D. thermocouple

17. Millivolt thermostats can be used to control ____ systems.
A. central air conditioning
B. centrifugal chiller
C. heat pump
D. standing-pilot light heating

18. Being able to adjust conditioned space temperature remotely using a tablet PC, smartphone, or laptop is specifically an advantage of a ____ thermostat.
A. multistage
B. millivolt
C. power-stealing
D. wireless

19. Tapping into a fan, cooling, or heating terminal and drawing a small milliamp current to recharge its internal battery is a feature of a ____ thermostat.
A. multistage
B. millivolt
C. power-stealing
D. wireless

20. A programmable thermostat uses a(n) ____ that functions as a clock and controls the climate for different blocks
A. anticipator

22. The thermostat wiring designation for power from the step-down transformer is ____.
A. C
B. R
C. W
D. Y

23. The thermostat wiring designation for

Chapter 36 Thermostats 979

2. A common temperature-sensing component that reacts to temperature change by changing shape to actuate a reed switch or mercury switch is a ____.
A. bimetal strip
B. diaphragm
C. thermistor
D. thermocouple

3. To reduce or eliminate electrical arcing in an electrical control, use ____.
A. a long bimetal strip coiled tightly
B. magnets to pull in electrical contacts
C. a mercury switch
D. Any of the above.

4. What is the condition called in which the residual heat blown through the ductwork raises the temperature of the conditioned space above the thermostat set point after a heating thermostat has shut off a furnace?
A. Heat wave.
B. System lag.
C. System overshoot.
D. Temperature swing.

5. The total differenc

8. The devices used by mechanical cooling thermostats to turn off early enough to prevent system overshoot or temperatures below the thermostat set point are called ____.
A. cooling anticipators
B. heat anticipators
C. temperature limit switches
D. zone controls

9. A combination thermostat is used to control a(n) ____.
A. combination lock
B. cooling contactor only
C. heating and cooling system
D. indoor blower's operation only

10. A gas furnace with a multistage thermostat uses ____ to control its heat capacity.
A. a cooling anticipator
B. multiple sets of electric resistance heating coils
C. a reed switch
D. a two-stage or modulating gas valve

11. Line-voltage thermostats typically operate at ____.
A. 30 mVdc to 50 mVdc
B. 1 Vdc to 5 Vdc
C. 24 Vac to 30 Vac
D. 120 Vac to 240 Vac

12. Low-voltage thermostats typically operate at ____.
A. 30 mVdc to 50 mVdc
B. 1 Vdc to 5 Vdc
C. 24 Vac to 30 Vac
D. 120 Vac to 240 Vac

13. Low-voltage thermostats often use ____ to switch and control high current, line-voltage devices, such as fans and compressors.
A. expansion valves
B. relays
C. solenoids
D. verbal commands

14. The temperature-sensing component that reacts to temperature change by changing its electrical resistance is a ____.
A. bimetal strip
B. diaphragm
C. thermistor
D. thermocouple

10

Chapter Review

Summary

- In basic terms, a thermostat is a sensing device that reacts to temperature change. To the average person, a thermostat is the controller used to start, stop, or modulate the operation of a heating and cooling system.
- Common temperature-sensing devices used in thermostats include thermistors and bimetal coils. A temperature-sensing device is used with a switching device, such as a reed switch, contacts and magnets, or a mercury switch.
- Modern thermostats have numerous features and options, including various power sources, different temperature-sensing and switching devices, display options, service reminders, programming options, and Internet/mobile device communication capabilities.
- To prevent indoor temperature from moving too far from set point, thermostats use anticipators. A heat anticipator is a resistance heating coil that produces just enough heat to cycle off heat production so that air temperature does not overshoot set point beyond acceptable temperature swing. A cooling anticipator is a resistance heating coil that produces just enough heat to cycle on cooling mode before air temperature rises to cut-in set point.
- A multistage thermostat can control the heating or cooling capacity of a system. These thermostats often have extra wiring terminals for heat stage (W1, W2, etc.) and cooling stage (Y1, Y2, etc.) operation.
- Line-voltage thermostats operate on line voltage: 120 Vac or 240 Vac. These thermostats can control high current loads, such as electric heating elements.
- Low-voltage thermostats operate on 24 Vac from a step-down transformer.
- Millivolt thermostats operate on mere millivolts supplied by a thermocouple or thermopile.
- When installing a thermostat, follow the manufacturer's wiring diagrams. Set subbase DIP switches according to the type of system that the thermostat will control. Test wiring for proper connections and operation before programming the thermostat.
- Free cooling is the use of an air-side economizer. The economizer operates when outdoor air temperature (and sometimes humidity) is low. Duct dampers are adjusted so that the indoor blower draws in outdoor air for cooling.
- Wireless thermostats allow an HVAC system to be controlled from anywhere. These systems still require one or more temperature sensors.
- When troubleshooting an HVAC system, begin at the thermostat and determine whether the problem is in the wiring, in the furnace or air handler, or in the thermostat.
- When troubleshooting a line-voltage thermostat, be mindful of electrical dangers and set a multimeter to read appropriate voltage levels.
- Zoned systems are designed to heat or cool different areas of a building to different comfort, humidity, and ventilation standards. Forced-air zoning operates using ductwork, dampers, sensors, and related controls. Often, a barometric damper controls a bypass duct to handle some of the airflow when one or more zones are not calling for conditioning. Forced-air zoned systems may use a master-slave thermostat arrangement or a zone control panel communicating with different room thermostats.
- A freezestat is a thermostat that opens when evaporator temperature drops to around 33°F. This protects that evaporator from freezing over.
- When troubleshooting forced-air zoned systems, observe system operation to determine what is not happening and then determine why it is not happening. View the system as a whole. Work from big to small, beginning with overall airflow and working down to individual zone dampers.

Review Questions

Answer the following questions using the information in this chapter.

1. A sensing device that reacts to temperature change is a ____.
A. humidistat
B. pressurestat
C. sensostat
D. thermostat

Copyright Goodheart-Willcox Co., Inc.

978

Summary feature provides an additional review tool for you and reinforces key learning objectives.

Student Resources

Textbook

The ***Modern Refrigeration and Air Conditioning*** textbook provides an exciting, full-color, and highly illustrated learning resource. The textbook is available in print or online versions.

Workbook

The student workbook provides minds-on practice with questions and activities. Each chapter corresponds to the text and reinforces key concepts and applied knowledge.

Lab Manual

The student lab manual provides hands-on practice to be completed in the school lab setting under the guidance of an instructor or trainer. The lab manual enables students to demonstrate learning in a practical and engaging manner.

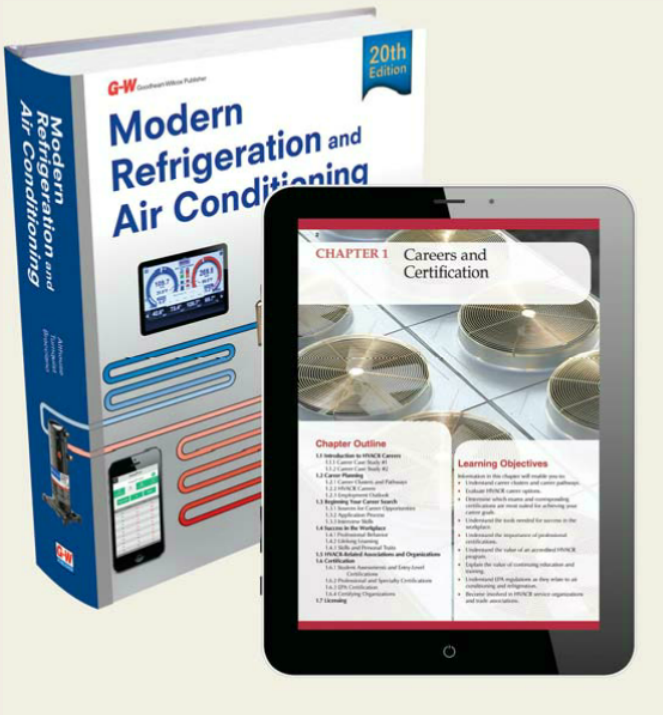

Instructor Resources

Instructor resources provide information and tools to support teaching, grading, and planning; course administration; class presentations; and assessment.

Instructor's Presentations for PowerPoint®

Help teach and visually reinforce key concepts with prepared lectures. These presentations are designed to allow for customization to meet daily teaching needs. They include objectives, outlines, and images from the textbook.

ExamView® Assessment Suite

Quickly and easily prepare, print, and administer tests with the ExamView® Assessment Suite. With hundreds of questions in the test bank corresponding to each chapter, you can choose which questions to include in each test, create multiple versions of a single test, and automatically generate answer keys. Existing questions may be modified and new questions may be added. You can prepare pretests, formative, and summative tests easily with the ExamView® Assessment Suite.

Image Library

Instructors are able to access many of the images from the textbook for use in customized presentations and worksheets.

Instructor's Resource CD

One resource provides instructors with time-saving preparation tools such as answer keys, lesson plans, and correlation charts to standards.

Online Instructor Resources

Online Instructor Resources provide all the support needed to make preparation and classroom instruction easier than ever. Available in one accessible location, support materials include image library, answer keys, lesson plans, Instructor's Presentations for PowerPoint®, ExamView® Assessment Suite, and more! Online Instructor's Resources are available as a subscription and can be accessed at school or at home.

Video Clip and Animations Library

Live-action video clips and animations (included in G-W Online) provide students the opportunity to watch hands-on demonstrations of essential skills.

G-W Online

This exciting new learning product brings the text and learning alive for your students! The textbook's interactive learning activities—including narrated animations and video clips—engage your students, providing them with dynamic visuals and immediate feedback. G-W Online enhances your course with course management and assessment tools that accurately monitor and track student learning. The ultimate in convenient and quick grading, G-W Online allows you to spend more time teaching and less on administration.

Brief Contents

Section 1—Professional Development

1 Careers and Certification 2
2 Safety 22
3 Service Calls 42

Section 2—Refrigeration System Fundamentals

4 Energy and Matter 54
5 Gases 72
6 Basic Refrigeration Systems 88

Section 3—Service Basics

7 Tools and Supplies 104
8 Working with Tubing and Piping 136

Section 4—Refrigerants

9 Introduction to Refrigerants 168
10 Equipment and Instruments for Refrigerant Handling and Service 196
11 Working with Refrigerants 234

Section 5—Basic Electricity, Magnetism, and Electronics

12 Basic Electricity 270
13 Electrical Power 290
14 Basic Electronics 308

Section 6—Motors and Electric Control Systems

15 Electric Motors 324
16 Electrical Control Systems 350
17 Servicing Electric Motors and Controls 390

Section 7—Refrigeration System Components

18 Compressors 422
19 Compressor Safety Components 456
20 Metering Devices 470
21 Heat Exchangers 510
22 Refrigerant Flow Components 558

Section 8—Domestic Refrigerators and Freezers

23 Overview of Domestic Refrigerators and Freezers 596
24 Systems and Components of Domestic Refrigerators and Freezers 610
25 Installation and Troubleshooting of Domestic Refrigerators and Freezers 638
26 Service and Repair of Domestic Refrigerators and Freezers 668

Section 9—Indoor Air Fundamentals

27 Air Movement and Measurement 686
28 Air Quality 718
29 Air Distribution 744
30 Ventilation System Service 786

Section 10—Air-Conditioning Systems

31 Ductless Air-Conditioning Systems 804
32 Residential Central Air-Conditioning Systems 834
33 Commercial Air-Conditioning Systems 858
34 Absorption and Evaporative Cooling Systems 898
35 Humidity Control 924
36 Thermostats 940
37 Heating and Cooling Loads 982

Section 11—Heating Systems

38 Forced-Air Heating Fundamentals 1020
39 Hydronic Heating Fundamentals 1034
40 Heat Pumps 1080
41 Gas-Fired Heating Systems 1114
42 Oil-Fired Heating Systems 1148
43 Electric Heating Systems 1192

Section 12—Energy Management and Conservation

44 Solar Power and Thermal Storage 1218
45 Energy Management 1244
46 Energy Conservation 1260

Section 13—Commercial Refrigeration Systems

47 Overview of Commercial Refrigeration Systems 1278
48 Special Refrigeration Systems and Applications 1310
49 Commercial Refrigeration System Configurations 1332

Section 14—Designing Commercial Refrigeration Systems

50 Understanding Heat Loads and System Thermodynamics 1348
51 Commercial Refrigeration Component Selection 1378

Section 15—Installing and Servicing Commercial Refrigeration Systems

52 Installing Commercial Systems 1398
53 Troubleshooting Commercial Systems—System Diagnosis 1422
54 Troubleshooting Commercial Systems—Component Diagnosis 1466
55 Servicing Commercial Systems 1496

Contents

Section 1

Professional Development

CHAPTER 1
Careers and Certification 2
1.1 Introduction to HVACR Careers 4
1.2 Career Planning 4
1.3 Beginning Your Career Search 11
1.4 Success in the Workplace 15
1.5 HVACR-Related Associations and Organizations 16
1.6 Certification 16
1.7 Licensing 19

CHAPTER 2
Safety 22
2.1 Safety and the Government 24
2.2 Hazard Assessment 24
2.3 Personal Protective Equipment (PPE) 33
2.4 Safe Work Practices 36

CHAPTER 3
Service Calls 42
3.1 Servicing 44
3.2 Troubleshooting 44
3.3 Customer Service 47

Section 2

Refrigeration System Fundamentals

CHAPTER 4
Energy and Matter 54
4.1 Systems of Measurement 56
4.2 Matter and Energy 56
4.3 Mass and Weight 56
4.4 Density 57
4.5 Force, Work, and Power 57
4.6 Heat 59
4.7 Measuring Refrigeration Effect 68

CHAPTER 5
Gases 72
5.1 Volume 74
5.2 Pressure 74
5.3 Gas Laws 80
5.4 Saturated Vapor 84
5.5 Basic Processes That Provide Cooling Effect 84

CHAPTER 6
Basic Refrigeration Systems 88
6.1 Compression Refrigeration Cycle 90
6.2 High Side and Low Side 91
6.3 Compression 92
6.4 Condensing 94
6.5 Metering Device 97
6.6 Evaporating 98

Section 3

Service Basics

CHAPTER 7
Tools and Supplies 104
7.1 Hand Tools 106
7.2 Power Tools 122
7.3 Instruments 122
7.4 Standard Supplies 126
7.5 Employer-Provided Tools and Equipment 130

CHAPTER 8
Working with Tubing and Piping 136
8.1 Types of Refrigerant Tubing 138
8.2 Non-Refrigerant Tubing and Pipe 140
8.3 Cutting Tubing 143
8.4 Bending Tubing 144
8.5 Connecting Tubing 146
8.6 Connecting Pipe 162

Section 4

Refrigerants

CHAPTER 9

Introduction to Refrigerants 168

9.1 Refrigerants and the Ozone Layer 170
9.2 Classifying Refrigerants 171
9.3 Identifying Refrigerants 175
9.4 Refrigerant Properties 177
9.5 Refrigerant Applications 184
9.6 Inorganic Refrigerants 185
9.7 Refrigeration Lubricants 189

CHAPTER 10

Equipment and Instruments for Refrigerant Handling and Service 196

10.1 Refrigerant Cylinders 198
10.2 Pressure Gauges 201
10.3 Service Valves 206
10.4 Gauge Manifolds 214
10.5 Leak Detection Devices 217
10.6 Vacuum Pumps 223
10.7 Recovery, Recycling, and Reclaiming Equipment 225

CHAPTER 11

Working with Refrigerants 234

11.1 Checking Refrigerant Charge 236
11.2 Redistributing Refrigerant 239
11.3 Locating and Repairing Refrigerant Leaks 248
11.4 Evacuating a System 253
11.5 Charging a System 258

Section 5

Basic Electricity, Magnetism, and Electronics

CHAPTER 12

Basic Electricity 270

12.1 Fundamental Principles of Electricity 272
12.2 Types of Electricity 275
12.3 Electrical Materials 277
12.4 Circuit Fundamentals 278
12.5 Magnetism 282
12.6 Electrical Generators 284
12.7 Transformer Basics 285

CHAPTER 13

Electrical Power 290

13.1 Electrical Power 292
13.2 Power Circuits 295
13.3 Electrical Problems 302

CHAPTER 14

Basic Electronics 308

14.1 Semiconductor Basics 310
14.2 Control Circuits and Electronic Devices 312
14.3 Circuit Boards and Microprocessors ... 316
14.4 Switches 317
14.5 Relays 318
14.6 Solenoids 318
14.7 Thermocouples 320

Section 6

Motors and Electric Control Systems

CHAPTER 15

Electric Motors 324

15.1 The Elementary Electric Motor 326
15.2 AC Induction Motors 330
15.3 Electronically Commutated Motors (ECMs) 338
15.4 Standard Motor Data 339
15.5 Motor Applications in HVACR Systems 342

CHAPTER 16

Electrical Control Systems 350

16.1 Circuit Diagrams 352
16.2 Control System Fundamentals 352
16.3 Motor Controls 357

16.4 Motor Protection Devices.....376
16.5 Direct Digital Controls (DDC).....380

CHAPTER 17
Servicing Electric Motors and Controls.....390
17.1 Electrical Test Equipment.....392
17.2 Troubleshooting Electric Motors 400
17.3 Servicing Hermetic Compressor Motors 404
17.4 Servicing Fan Motors 407
17.5 Servicing External Motors 409
17.6 Servicing Motor Control Systems.....414

Section 7
Refrigeration System Components

CHAPTER 18
Compressors.....422
18.1 Compressor Drive Configurations 424
18.2 Types of Compressors.....427
18.3 General Compressor Components and Systems 446

CHAPTER 19
Compressor Safety Components....456
19.1 Compressor Operating Conditions 458
19.2 Compressor Protection Devices 458
19.3 Oil Control Systems.....462
19.4 Vibration Absorbers 466
19.5 Crankcase Heaters.....467

CHAPTER 20
Metering Devices 470
20.1 Metering Device Basics.....472
20.2 Capillary Tubes.....472
20.3 Metering Orifices 476
20.4 Thermostatic Expansion Valves (TXVs).....477
20.5 Automatic Expansion Valves (AXVs).....493
20.6 Electronic Expansion Valves (EEVs).....496
20.7 Float-Operated Refrigerant Controls ... 501

CHAPTER 21
Heat Exchangers 510
21.1 Evaporators.....512
21.2 Condensers 535
21.3 Head Pressure Control.....544
21.4 Other Heat Exchangers 547

CHAPTER 22
Refrigerant Flow Components 558
22.1 Refrigerant Loop Components 560
22.2 Storage and Filtration Components.....560
22.3 Refrigerant Flow Valves.....565
22.4 Pressure-Regulating Valves.....575
22.5 Head Pressure Controls Valves 584

Section 8
Domestic Refrigerators and Freezers

CHAPTER 23
Overview of Domestic Refrigerators and Freezers 596
23.1 Domestic Refrigeration.....598
23.2 Refrigerators and Freezers.....599
23.3 Innovative Technologies 605

CHAPTER 24
Systems and Components of Domestic Refrigerators and Freezers.....610
24.1 Basic Components of Refrigerators and Freezers 612
24.2 Specialized Systems 620

CHAPTER 25
Installation and Troubleshooting of Domestic Refrigerators and Freezers 638
25.1 Checking for Proper Installation.....640
25.2 Diagnosing Symptoms 643
25.3 Checking External Circuits 650
25.4 Diagnosing Internal Troubles.....654

CHAPTER 26
Service and Repair of Domestic Refrigerators and Freezers 668
26.1 External Service Operations 670
26.2 Internal Service Operations.....671
26.3 Storing or Discarding a Refrigerator-Freezer 682

Section 9
Indoor Air Fundamentals

CHAPTER 27
Air Movement and Measurement ...686
27.1 Climate.....688
27.2 Atmosphere and Air 688
27.3 Comfort Conditions 702
27.4 Air Movement.....705
27.5 Factors Affecting Indoor Air Conditions 714

CHAPTER 28
Air Quality 718
28.1 Indoor Air Quality Standards and Guidelines.....720
28.2 Air Pollutants 720
28.3 Indoor Air Quality.....724
28.4 Air Cleaning.....730
28.5 Indoor Air Quality Systems.....739

CHAPTER 29
Air Distribution.....744
29.1 Air Properties and Behavior..... 746
29.2 Air Circulation 747
29.3 Basic Ventilation Requirements 748
29.4 Air Ducts.....753
29.5 Duct Sizing 768
29.6 Fans 775
29.7 Air Curtains 781

CHAPTER 30
Ventilation System Service 786
30.1 Airflow Measurement.....788
30.2 Special Duct Problems and Duct Maintenance 793
30.3 Fan Service 799
30.4 Filter Service 799

Section 10
Air-Conditioning Systems

CHAPTER 31
Ductless Air-Conditioning Systems 804
31.1 Principles of Cooling and Humidity Control.....806
31.2 Room Air Conditioners.....808
31.3 Packaged Terminal Air Conditioners (PTACs).....819
31.4 Console Air Conditioners 821
31.5 Portable Air Conditioners 823
31.6 Multizone Ductless Split System.....825

CHAPTER 32
Residential Central Air-Conditioning Systems 834
32.1 Central Air Conditioning.....836
32.2 Split Systems.....838
32.3 Comfort Cooling Controls.....841
32.4 Installing Central Air Conditioning 843
32.5 Inspecting Central Air-Conditioning Systems 848
32.6 Servicing Central Air-Conditioning Systems 850
32.7 Variable Refrigerant Flow (VRF) Systems 852

CHAPTER 33
Commercial Air-Conditioning Systems 858
33.1 Rooftop and Outdoor Units.....860
33.2 Chillers 872
33.3 Cooling Towers 884

CHAPTER 34
Absorption and Evaporative Cooling Systems.....898
34.1 Absorption Refrigeration Systems.....900
34.2 Absorption Cooling Systems 902
34.3 Absorption System Service 914
34.4 Evaporative Cooling 917

CHAPTER 35
Humidity Control 924
35.1 Humidity Levels and Comfort 926
35.2 Types of Humidifiers 928
35.3 Dehumidifying Equipment 934
35.4 Servicing and Installing Humidifiers ...936

CHAPTER 36
Thermostats.....940
36.1 What Is a Thermostat? 942
36.2 Types of Thermostats 946
36.3 Line-Voltage Thermostats 952
36.4 Low-Voltage Thermostats.....952
36.5 Millivolt Thermostats.....955
36.6 Digital and Programmable Thermostats.....955
36.7 Thermostat Installation.....960
36.8 Thermostat Diagnostics.....964
36.9 Zone Systems 968

CHAPTER 37
Heating and Cooling Loads 982
37.1 Heat Transfer.....984
37.2 Heat Loads 984
37.3 Calculating Heat Leakage.....985
37.4 Other Factors Affecting Heat Loads 1000
37.5 Heating and Cooling Load—Manual J Method 1007
37.6 Software and Apps for Load Calculations 1014

Section 11
Heating Systems

CHAPTER 38
Forced-Air Heating Fundamentals 1020
38.1 Basic Components 1022
38.2 Furnace Types and Construction..... 1025
38.3 Forced-Air Duct Arrangements..... 1027
38.4 Makeup Air Units 1027
38.5 Blower Controls 1029
38.6 Unit Heaters 1031

CHAPTER 39
Hydronic Heating Fundamentals 1034
39.1 Hydronic System Components 1036
39.2 Hydronic System Designs 1047
39.3 Hydronic System Controls 1059
39.4 Hydronic System Installation 1063
39.5 Troubleshooting and Servicing Hydronic Systems 1065
39.6 Preparing a Boiler for the Heating Season..... 1074

CHAPTER 40
Heat Pumps 1080
40.1 Heat Pump Basics..... 1082
40.2 Types of Heat Pumps 1083
40.3 Heat Pump Efficiency 1086
40.4 Heat Pump System Components 1088
40.5 Heat Pump Controls 1100
40.6 Heat Pumps and Solar Heating Systems 1105
40.7 Heat Pump System Service 1106

CHAPTER 41
Gas-Fired Heating Systems.....1114
41.1 Gas Furnace Operation Overview 1116
41.2 Combustion.....1117
41.3 Gas Valves..... 1121
41.4 Gas Burners..... 1122
41.5 Ignition Systems..... 1124
41.6 Gas Furnace Controls..... 1127
41.7 Gas Furnace Efficiency..... 1131
41.8 Gas Furnace Venting Categories..... 1134
41.9 Gas-Fired Radiant Heat..... 1134
41.10 Gas-Fired Heating System Service ... 1134

CHAPTER 42
Oil-Fired Heating Systems.....1148
42.1 Basic Oil Furnace Operation 1150
42.2 Fuel Oil 1151
42.3 Combustion Efficiency..... 1152
42.4 Fuel Line Components 1157
42.5 Oil Burners 1161
42.6 Primary Control Units 1169
42.7 Oil Furnace Exhaust.....1176
42.8 Oil-Fired Heating System Service 1176

CHAPTER 43
Electric Heating Systems 1192
43.1 Principles of Electric Resistance Heating..... 1194
43.2 Electric Heating Elements..... 1194
43.3 Electric Heating Systems 1195
43.4 Electric Furnace and Duct Heater Controls..... 1204
43.5 Electric Baseboard Heating Unit Controls..... 1209
43.6 Electric Heat Construction Practices ... 1210
43.7 Electric Heating System Service 1212

Section 12
Energy Management and Conservation

CHAPTER 44
Solar Power and Thermal Storage.....1218
44.1 The Nature of Solar Energy..... 1220
44.2 Solar Collectors 1221
44.3 Solar Heating Systems..... 1224
44.4 Applications for Solar Heating Systems 1226
44.5 Supplementary Heat 1227
44.6 Converting Solar Energy to Electricity 1228
44.7 Solar Energy Cooling Systems..... 1232
44.8 Thermal Energy Storage (TES) Systems 1234

CHAPTER 45
Energy Management 1244
45.1 Energy Consumption..... 1246
45.2 Energy Audits 1246
45.3 Building Control Systems 1248
45.4 Controllers for Building Control Systems 1250
45.5 Building Control Protocols 1253
45.6 Building Control System Diagnostics and Repair 1256

CHAPTER 46
Energy Conservation 1260
46.1 Building Efficiency 1262
46.2 HVAC Equipment Efficiency 1268
46.3 HVAC Alternatives for Energy Conservation..... 1270
46.4 The Role of the HVACR Technician 1274

Section 13
Commercial Refrigeration Systems

CHAPTER 47
Overview of Commercial Refrigeration Systems.....1278
47.1 Applications..... 1280
47.2 Commercial Refrigeration Systems 1282
47.3 Industrial Applications 1306

CHAPTER 48
Special Refrigeration Systems and Applications.....1310
48.1 Transportation Refrigeration 1312
48.2 Alternative Refrigeration Methods 1319

CHAPTER 49
Commercial Refrigeration System Configurations 1332
49.1 Commercial Systems Configuration Overview..... 1334
49.2 Multiple-Evaporator Systems..... 1334
49.3 Modulating Refrigeration Systems 1334
49.4 Multistage Systems 1338
49.5 Secondary Loop Refrigeration System 1343

Section 14
Designing Commercial Refrigeration Systems

CHAPTER 50
Understanding Heat Loads and System Thermodynamics 1348
50.1 Heat Loads..... 1350
50.2 Thermodynamics of the Basic Refrigeration Cycle..... 1370

CHAPTER 51
Commercial Refrigeration Component Selection 1378
51.1 Sizing Compressors, Condensers, and Evaporators 1380
51.2 Calculating Theoretical Compressor Volume 1386
51.3 Designing Piping 1388

Section 15
Installing and Servicing Commercial Refrigeration Systems

CHAPTER 52
Installing Commercial Systems 1398
52.1 Types of Commercial Installations 1400
52.2 Codes and Standards 1401
52.3 Installing Condensing Units 1401
52.4 Installing Expansion Valves 1404
52.5 Installing Evaporators 1405
52.6 Installing Refrigerant Lines 1406
52.7 Installing Electric Motors 1411
52.8 Testing Installations 1414
52.9 Charging Commercial Systems 1415
52.10 Starting a Commercial Refrigeration System 1418

CHAPTER 53
Troubleshooting Commercial Systems—System Diagnosis.....1422
53.1 Commercial Refrigeration Troubleshooting 1424
53.2 Checking Refrigerant Charge 1430
53.3 Diagnosing Common Symptoms 1431
53.4 Troubleshooting Ice Machines 1454

CHAPTER 54
Troubleshooting Commercial Systems—Component Diagnosis 1466
54.1 General Inspection Overview 1468
54.2 Checking Electrical Circuits 1468
54.3 Checking External Motors 1469
54.4 Checking Condensing Units 1470
54.5 Checking Liquid Lines 1484
54.6 Checking Thermostatic Expansion Valves (TXVs) 1485
54.7 Checking Electronic Expansion Valves (EEVs) 1486
54.8 Checking Evaporator Pressure Regulators (EPRs) 1488
54.9 Checking Hot-Gas Valves 1489
54.10 Checking Solenoid Valves 1489
54.11 Checking Evaporators 1489
54.12 Checking Suction Lines 1491

CHAPTER 55
Servicing Commercial Systems 1496
55.1 System Service Fundamentals 1498
Servicing Motors and Compressors 1502
55.3 Servicing Condensers 1507
55.4 Servicing Liquid Lines 1513
55.5 Servicing Evaporators 1515
55.6 Servicing Valves 1516
55.7 Reconditioning Equipment after a Flood 1519

Appendixes 1524
Appendix A: Service Information 1525
Appendix B: Troubleshooting Charts 1529
Appendix C: Refrigerants 1542
Appendix D: Electricity and Electronics 1552
Appendix E: Heat, Temperature, and Pressure 1553
Appendix F: Equivalent Charts 1558
Appendix G: EPA Certification 1566
Appendix H: HVACR-Related Associations and Organizations 1573

Glossary 1575
Index 1619

Step-by-Step Procedures

Modern Refrigeration and Air Conditioning includes more than 120 step-by-step procedures. These hands-on service procedures provide easy-to-follow numbered instructions. Clear labeling and unique coloring make these procedures easy to find for future reference.

Chapter 2: Safety
Using a Fire Extinguisher 28

Chapter 7: Tools and Supplies
Loosening a Tight Bolt or Nut 128

Chapter 8: Working with Tubing and Piping
Annealing Tubing 138
Cutting Tubing with a Tubing Cutter 143
Cutting Tubing with a Hacksaw 143
Squaring and Reaming Tubing End 144
Bending with a Lever-Type Tubing Bender 146
Single Flaring Procedure 147
Double Flaring Procedure Using Adapters 148
Double Flaring Procedure Using Punches 149
Soldering Procedure 156
Brazing Procedure 158
Swaging Tubing with a Swaging Adapter 161
Solvent Welding Plastic Pipe 164

Chapter 10: Equipment and Instruments for Refrigerant Handling and Service
Cleaning a Thermistor Vacuum Gauge 203
Loosening a Stuck Service Port Plug 210
Installing a Bolted-On Piercing Valve 213
Installing a Brazed-On Piercing Valve 213
Purging a Gauge Manifold and Hoses 216
Testing a Vacuum Pump 225

Chapter 11: Working with Refrigerants
Checking Refrigerant Charge by Subcooling 236
Checking Refrigerant Charge by Superheat 237
Pumping Down the System 240
Passive Recovery Procedure Using the Compressor 240
Passive Recovery Procedure without the Compressor 241
Vapor Refrigerant Recovery Procedure 242
Liquid Refrigerant Recovery Procedure 243
Push-Pull Liquid Recovery Procedure 244
Checking a Recovery Cylinder Liquid Level Switch 248
Locating a Refrigerant Leak 249
Pressure Testing with an Inert Gas 249
Pressure Testing with the System's Refrigerant 250
Two-Part Epoxy Repair 253
One-Part Epoxy Repair 253
Deep Vacuum Evacuation Procedure 255
Triple Evacuation Procedure 256
Vapor Charging by Weight 260
Vapor Charging to "Top Off" an Undercharged System 260
Liquid Charging by Weight 262

Chapter 13: Electrical Power
Crimping Wires to Wire Terminals 298

Chapter 14: Basic Electronics
Testing a Diode 312

Chapter 15: Electric Motors
Reversing the Rotation of a Three-Phase Motor 337
Identifying Unmarked Compressor Terminals 345

Chapter 16: Electrical Control Systems
Setting a High-Pressure Safety Cut-Out for a Pressure Motor Control 364
Setting the Range on a Dual Pressure Motor Control 366
Checking a Current Relay 370
Checking a Potential Relay 371

Chapter 17: Servicing Electric Motors and Controls
Using an In-Line Ammeter 395
Testing a Hermetic Compressor's Winding Insulation 398
Discharging and Testing a Capacitor 401
Measuring Capacitance 402
Checking Hermetic Compressors for Continuity and Shorts 405
Checking Hermetic Compressors for Shorts to Ground 406
Hard Start Method of Servicing a Stuck Hermetic Compressor 407
Finding Connection Problems in a Fan Motor Circuit 408

Chapter 18: Compressors
Determining Compressor Speed 425

Chapter 25: Installation and Troubleshooting of Domestic Refrigerators and Freezers
Using Valve Adapters 657
Pinpointing a Restriction 663

Chapter 26: Service and Repair of Domestic Refrigerators and Freezers

Preparing a Domestic Refrigerator or Freezer for Internal Service 671
Removing a Hermetic Compressor 672
Installing a Replacement Compressor 673
Repairing a Stainless Steel Evaporator 675
Repairing an Aluminum Evaporator 675
Replacing a Filter-Drier 677
Testing a Thermostat 681

Chapter 28: Air Quality

Cleaning an Ultraviolet Air Treatment System 738

Chapter 29: Air Distribution

Riveting a Joint Using a Pop Rivet Tool 760
Using Mastic to Seal a Duct Joint 760
Installing Insulation into Square Ductwork 761
Duct Sizing Procedure 769
Sizing Ducts Using the Friction Chart 773

Chapter 30: Ventilation System Service

Performing a Blower Door Test 790
Cleaning Ductwork 796
Balancing a System—Long Method 797
Balancing a System—Short Method 797
Washing an Electronic Air Cleaner Filter 800

Chapter 36: Thermostats

Troubleshooting a Heating System with a Low-Voltage Thermostat 965
Diagnosing a High Current Draw on a Transformer 966
Diagnostics Using a Line-Voltage Thermostat 967
Troubleshooting a Zoned System 974

Chapter 39: Hydronic Heating Fundamentals

Purging a Series Loop System 1067
Purging a One-Pipe System with Primary and Secondary Loops 1067
Purging a Two-Pipe Zoned System with Zone Circulating Pumps 1069
Purging a Two-Pipe Zoned System with Zone Valves 1070
Purging a Hydronic System Filled with Glycol Solution 1070
Recharging a Horizontal Expansion Tank 1073
Recharging a Diaphragm Expansion Tank 1073
Boiler Inspection and Maintenance 1074

Chapter 41: Gas-Fired Heating Systems

Heat Exchanger Leak Test Procedure 1138

Chapter 42: Oil-Fired Heating Systems

Stack Temperature Test Procedure 1154
Draft Test Procedure 1155
Smoke Test Procedure 1157
Manually Bleeding an Oil Furnace 1181

Chapter 43: Electric Heating Systems

Testing Heating Elements 1213
Replacing Baseboard Heating Units 1213

Chapter 45: Energy Management

Troubleshooting a Building Ethernet/IP Communication Fault 1257
Troubleshooting a Controller and Cable Loss of Signal 1257
Troubleshooting to Component Level 1257
Troubleshooting an Electrical Failure 1257

Chapter 50: Understanding Heat Loads and System Thermodynamics

Using Tables to Determine Service Heat Load 1359

Chapter 51: Commercial Refrigeration Component Selection

Selecting Components for a Commercial Refrigeration System 1380

Chapter 52: Installing Commercial Systems

Commercial Refrigeration Installations 1400
Low-Side Charging Procedure 1415
High-Side Charging Procedure 1417
Starting a Commercial Refrigeration System 1419

Chapter 53: Troubleshooting Commercial Systems—System Diagnosis

Fixing a System with a Frozen Moisture Restriction in the TXV 1436
Flushing a Dirty Expansion Valve 1436
Replacing a Clogged Inlet Screen 1437
Quick Check for Trapped Noncondensables 1444
P/T Chart Check for Trapped Noncondensables 1445
Ice Machine Capacity Check 1458

Chapter 54: Troubleshooting Commercial Systems—Component Diagnosis

Identifying Leaking Compressor Valves 1472
Crankshaft Seal Leak Detection 1473
Determining Head Pressure for an Air-Cooled Condenser 1479
Troubleshooting Outdoor Condensers 1480
Troubleshooting Outdoor Condenser Louvers 1481
Determining Head Pressure for a Water-Cooled Condenser 1481
Leak Testing a Water-Cooled Condenser 1481
Removing Scale Deposits from Water-Cooled Condenser Water Tubes 1482

Chapter 55: Servicing Commercial Systems

Opening a Refrigerant Circuit for Service 1498
Removing Open-Drive Compressors 1502
Removing Hermetic Compressors 1505
Removing a Pressure-Operated Water Valve 1511

CHAPTER 1 Careers and Certification

Chapter Outline

1.1 Introduction to HVACR Careers
- 1.1.1 Career Case Study #1
- 1.1.2 Career Case Study #2

1.2 Career Planning
- 1.2.1 Career Clusters and Pathways
- 1.2.2 HVACR Careers
- 1.2.3 Employment Outlook

1.3 Beginning Your Career Search
- 1.3.1 Sources for Career Opportunities
- 1.3.2 Application Process
- 1.3.3 Interview Skills

1.4 Success in the Workplace
- 1.4.1 Professional Behavior
- 1.4.2 Lifelong Learning
- 1.4.3 Skills and Personal Traits

1.5 HVACR-Related Associations and Organizations

1.6 Certification
- 1.6.1 Student Assessments and Entry-Level Certifications
- 1.6.2 Professional and Specialty Certifications
- 1.6.3 EPA Certification
- 1.6.4 Certifying Organizations

1.7 Licensing

Learning Objectives

Information in this chapter will enable you to:

- Understand career clusters and career pathways.
- Evaluate HVACR career options.
- Determine which exams and corresponding certifications are most suited for achieving your career goals.
- Understand the tools needed for success in the workplace.
- Understand the importance of professional certifications.
- Understand the value of an accredited HVACR program.
- Explain the value of continuing education and training.
- Understand EPA regulations as they relate to air conditioning and refrigeration.
- Become involved in HVACR service organizations and trade associations.

Technical Terms

bid
building inspector
career clusters
certification
energy auditor
estimator
HVAC Excellence
HVACR designer
HVACR drafter
HVACR engineer
installation
lifelong learning
NATE (North American Technical Excellence)
networking
punctuality
RSES (Refrigeration Service Engineers Society)
service
specialty certification
taking initiative

Introduction

Today is a great time to begin a career in the HVACR field. Air-conditioning and refrigeration systems are a critical part of our society. Over the next decade, the number of HVACR workers is expected to increase and a large number of current workers are expected to retire. These two trends create an opportunity for a large number of new workers to join the industry.

This chapter provides an introduction to career paths and opportunities in the HVACR industry, including some information on how to find a job, how to get a job, and how to keep a job. Professional associations and professional certification, which are critical components for professional growth in the HVACR field, are introduced as well.

1.1 Introduction to HVACR Careers

As you prepare your own pathway for a career in the HVACR field, the following case studies illustrate two of the many educational and professional pathways available in the HVACR field.

The two stories illustrate that each of us must take time to determine our strengths and areas of interest. No two people follow the same career path, but a career in HVACR can follow a number of routes and can be personally and financially rewarding. The key to success is to remain focused, dedicated, and to persevere. This book will provide you with the tools necessary to enter the HVACR field. The rest is up to you.

1.1.1 Career Case Study #1

Jose was an average student in high school. He enjoyed math and science, but he did not apply himself. His parents encouraged him to attend a four-year college in order to prepare for the world of work and to assist in becoming financially independent. Jose attended the nearby community college for two years, but he found the business courses dry and boring. Jose felt he still did not know what career path he would follow. He left college, and during the following five years he obtained a number of jobs ranging from retail to office work. At the age of 25, Jose found a job working in a local HVACR shop warehouse. He worked hard, followed the workplace rules, and maintained a positive attitude. After a few months, Jose was promoted from working in the warehouse to an office position where he would assist with developing quotes. Jose found this position more enjoyable and fulfilling than his warehouse position, but he realized that he was drawn to more hands-on work. According to Jose, "I took a few years to discover my real path." Jose returned to school and attended HVACR classes. Although he had no previous knowledge of electricity and motors, he caught on quickly and found the subject matter fascinating. On completion of his coursework, Jose passed a standardized HVACR assessment and attained four entry-level certifications.

Within four weeks of completing his coursework, Jose had his own truck and within seven months, he was performing service work. His employers were impressed by Jose's motivation, dedication, effort, and honesty. They rewarded this with salary increases and new opportunities. Now motivated to excel in his chosen career, Jose realized that it would be important to continue his professional development and training by taking additional courses and attaining additional certifications.

Reflecting back on the past two years in the HVACR field, Jose shares that returning to school at the age of 25 was the best investment he ever made. After completing his initial coursework, he became even more ambitious and started taking additional tests to receive more certifications and licenses. In Jose's words, "Now it is up to me to take it to the next step and determine where I want to go. I love my job!"

1.1.2 Career Case Study #2

Ron was the youngest of four children. His parents valued education and encouraged him to discover his passion and talents. While in high school, he struggled with math and science. His high school counselor suggested that he apply to attend the HVACR program at the local career and technical center. There, Ron completed a two-year program and discovered that he was quite good at understanding the complexities of systems. Although he enjoyed hands-on work in the field, he preferred to analyze and design systems. He decided that engineering would be his career path. Although his fear of math and science lingered, he was confident that if he remained focused and gave 100% effort, he could succeed.

The four-year engineering program was rigorous, but Ron persevered and successfully completed a bachelor's degree in mechanical engineering. He was able to obtain his first professional position with a large HVACR system manufacturer. There, Ron quickly rose through the ranks and became a lead engineer on HVACR systems. His superiors noted his drive and enthusiasm and a number of promotions ensued. Ron was recruited by a competitor and received an impressive increase in salary and commissions. In his new position, he worked with HVACR manufacturers throughout the world and was able to visit countries such as Italy, China, and Mexico.

1.2 Career Planning

A job and a career are two different things. See **Figure 1-1**. A job is something you do to earn income. Often, a job is held for only a short period of time. A career is a series of employment opportunities where increased skills are developed, with the aim of professional advancement. The goal in a career is to move progressively into positions requiring greater knowledge and skills. These more advanced positions generally provide increased salary.

A career path is a sequence of related employment positions. A career path begins with entry-level positions. These positions generally require no previous working experience in the field. Entry-level positions may require a certain level of education, training, or skills. For example, a candidate for an entry-level HVAC service technician may be required to possess a certificate or associate's degree from a technical college.

Copyright Goodheart-Willcox Co., Inc.

Career paths progress from entry-level positions to positions requiring greater experience, knowledge, and skills. For some career paths, simply working in the entry-level position provides the experience and knowledge needed to attain the next employment position along the career path. In other career paths, training or certification in addition to experience in the entry-level position may be required to advance. See **Figure 1-2**.

Careers are chosen based on an individual's skills, strengths, abilities, and interests. A career allows you to develop your skills and expand on your experiences, positioning you for promotions, salary increases, and

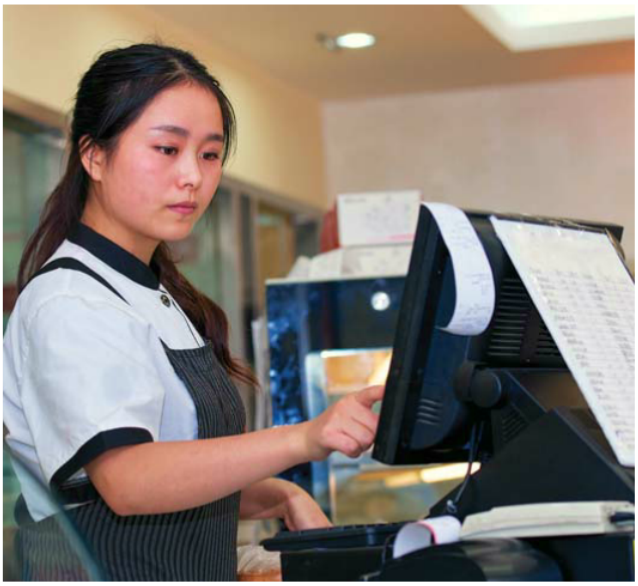

Job

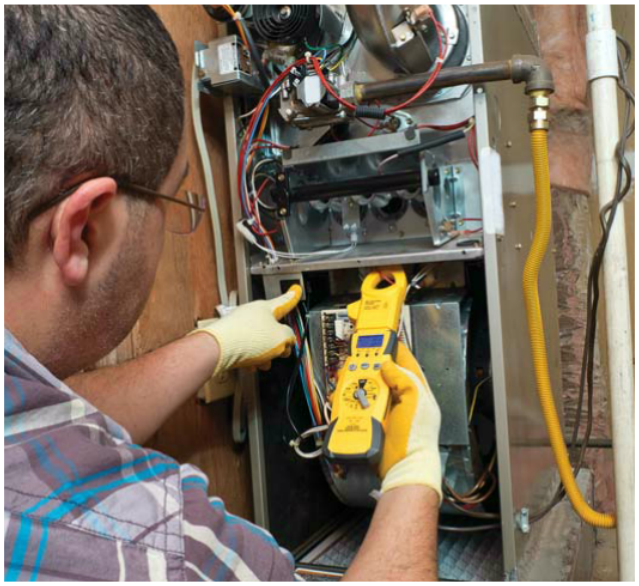

Career

ArtWell/Shutterstock.com; Geo Martinez/Shutterstock.com

Figure 1-1. A job, such as working as a cashier, generally requires little previous training or experience and provides few opportunities for advancement. A career, such as HVACR technician, often requires existing training or skills and provides good opportunities for professional growth.

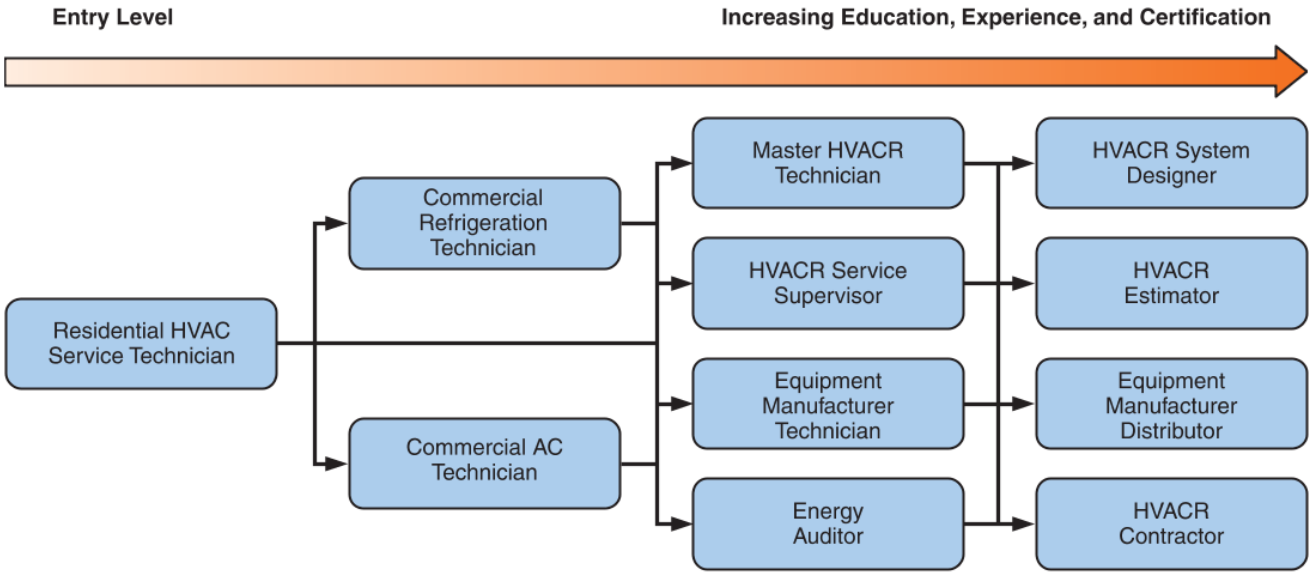

Goodheart-Willcox Publisher

Figure 1-2. A small sample of the nonlinear career paths offered by the HVACR industry. As you gain experience, education, and certifications throughout your career, you can advance to different positions. Each new position provides many opportunities.

Copyright Goodheart-Willcox Co., Inc.

other opportunities. Investing energy into the development of your career provides long-term benefits. Setting professional goals and determining a path for achieving those goals is the basis for achieving a career.

1.2.1 Career Clusters and Pathways

Career clusters are broad categories of employment fields, **Figure 1-3**. The career cluster model was developed by states in conjunction with educators, employers, and professional organizations. Each of the sixteen career clusters is further divided into several pathways.

In the career cluster model, occupations are grouped in appropriate pathways. Most HVACR occupations are located in the Architecture and Construction career cluster. Students who choose this career cluster tend to be good with their hands and able to visualize projects.

The career cluster model provides knowledge and skills statements at the cluster level and at the pathway level. These statements attempt to define the general skills required by all occupations within the pathway or cluster.

The Architecture and Construction career cluster is divided into three career pathways **Figure 1-4**:

- Design/preconstruction.
- Construction.
- Maintenance and operations.

1.2.2 HVACR Careers

Many students who complete training in an HVACR program begin their careers as entry-level installation technicians. However, the technical skills you are learning can lead to many other careers. Some careers for which HVACR technical knowledge and skills are useful are described in the following sections.

HVACR Technician

The work of an HVACR technician falls into two broad categories: installation and service. ***Installation*** involves the initial setup of equipment and systems. Installation may occur in new construction or in existing construction. ***Service*** involves work on existing systems. This may include performing scheduled

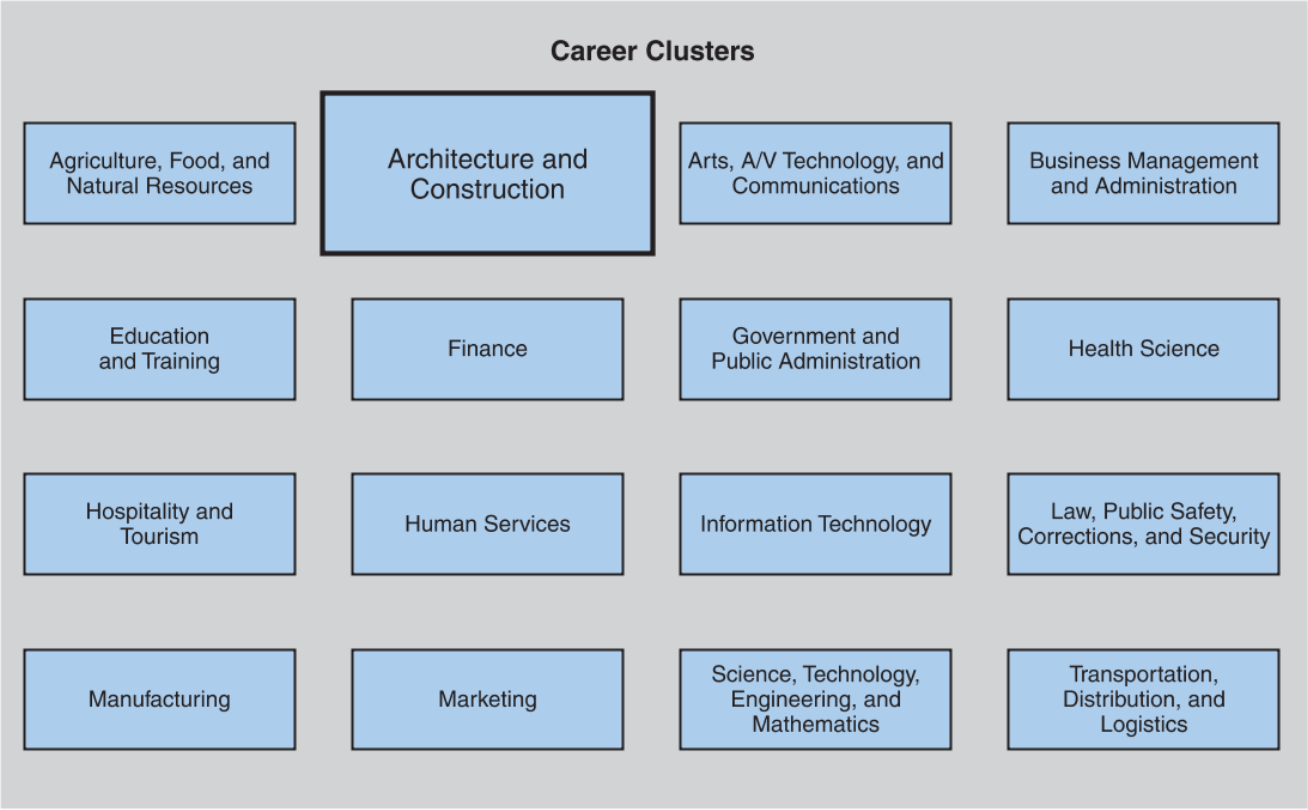

Goodheart-Willcox Publisher

Figure 1-3. In the career cluster model, occupations are categorized into these sixteen broad groupings. Most HVACR careers are found in the Architecture and Construction cluster.

Copyright Goodheart-Willcox Co., Inc.

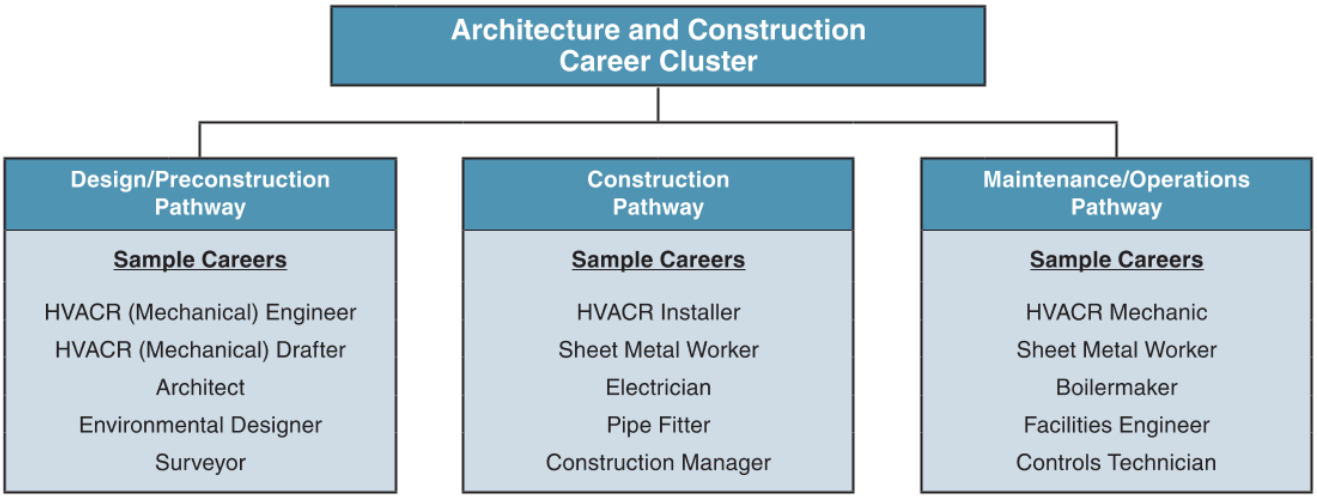

Goodheart-Willcox Publisher

Figure 1-4. The Architecture and Construction cluster comprises three pathways. A few of the occupations contained in each pathway are listed here.

maintenance or going on service calls to fix system problems. See **Figure 1-5**.

In larger contracting companies, installers may specialize in one of the subcategories of this trade, such as gas heat, oil heat, hydronics, residential air conditioning, or large commercial refrigeration systems. Installers who are self-employed or who work for smaller contractors are likely to work in several of these areas as required. Typically, an installer physically installs the heating, air-conditioning, or refrigeration unit; runs any necessary piping or ductwork; and installs and connects electrical wiring as needed. They then test the operation of the system, making any necessary adjustments. On large scale construction projects, an installer may do only portions of the job. Ductwork, piping, and electrical wiring may have to be installed by members of other trades.

Women in HVACR

Figure 1-5. An HVACR technician taking electrical measurements while troubleshooting a commercial air-conditioning unit.

Approximately half of the installers and technicians in the HVACR field work for heating and cooling contractors. The remainder are employed by industrial plants, institutions, and government agencies. About 15% are self-employed.

HVACR Drafter, Designer, Engineer

Residential air-conditioning systems are typically designed by the HVAC contractor. However, many air-conditioning and refrigeration systems are designed by HVACR engineering firms. The following are some types of systems designed by HVACR engineering firms:

- Commercial air-conditioning, such as office buildings, warehouses, movie theaters, shopping malls, and hotels.
- Commercial refrigeration systems, such as grocery store cases and cold-storage warehouses.
- Large public building air-conditioning systems, such as libraries, museums, university campuses, airports, and train stations.
- Large, high-end residential air-conditioning systems.

In many cases, the design of a large air-conditioning system must be approved by an ***HVACR engineer***. See **Figure 1-6**. An HVACR engineer normally has a bachelor's degree in mechanical engineering from a four-year university. An HVACR engineer may need to be licensed by the state before being able to approve designs. In order to be licensed, the engineer may need to pass a licensing exam and have a few years of professional experience.

Copyright Goodheart-Willcox Co., Inc.

Minerva Studio/Shutterstock.com

Figure 1-6. After designing an air-conditioning system, HVACR engineers inspect the installation and work with the HVACR contractor to address any adjustments or changes that are needed.

HVACR engineers analyze the building or refrigerated space to determine the requirements of the system. Once the requirements are known, the engineer designs the system. Much of an engineer's work deals with simulation and analysis. An engineer must be familiar with all legal requirements and best practices related to HVACR system design.

HVACR designers often prepare designs for smaller or more common air-conditioning systems. However, an HVACR designer is not licensed and does not have the same level of knowledge as an HVACR engineer. Often, HVACR designers may work with and have their designs approved by HVACR engineers.

Some HVACR designers start in the industry as HVACR technicians who make the effort to learn about system design, in addition to installation and service. Other HVACR designers may have an associate's degree from a two-year college or even an engineering degree from a four-year university.

An ***HVACR drafter*** works with engineers and designers to prepare construction drawings for HVACR systems. Knowledge of computer-aided design software and drafting conventions is critical for an HVACR drafter, who may have an associate's degree or certificate from a two-year college.

Estimator

In the HVACR industry, nearly all projects begin with a bid. A ***bid*** is an estimate of the scope and cost of a project. Accurate cost estimates are vital to the success of an HVACR company. Developing such estimates in great detail is the responsibility of the ***estimator***. See **Figure 1-7**.

The estimator calculates the cost of a project by considering many costs, including the following:

- Equipment and materials costs.
- Time needed to complete the work and the labor cost of that time.
- Costs for permits and inspections.

In order to determine these costs, an estimator studies the drawings and specifications for a project. Using the project documents, an estimator lists all of the equipment and materials needed to complete the project. The price of each item to be installed must be included in the cost estimate.

The estimator must also consider how the system will be installed, including the number of hours each HVACR technician will work for each task in the project. Often, an estimator works with a construction supervisor or project manager to plan each phase of construction.

An HVACR estimator has good math skills, is comfortable working with computer software, and pays close attention to details. An estimator may have a bachelor's degree from a four-year university or may have a background as an HVACR technician or as an HVACR designer.

Energy Auditor

An ***energy auditor*** inspects and tests a structure and then prepares a report. The report summarizes the current energy usage of the building and recommends ways to reduce energy usage. Often, the financial savings achieved by implementing some of the suggestions exceeds the cost of energy audit.

An energy auditor must have a good understanding of HVACR systems and building construction, including knowledge of "best practices" for energy

Monkey Business Images/Shutterstock.com

Figure 1-7. Estimators carefully study construction drawings and specifications to account for all equipment and materials required for a project. Paying attention to small details is critical to success as an estimator.

Copyright Goodheart-Willcox Co., Inc.

efficiency. In addition to visually inspecting a building, an energy auditor may perform several tests:

- Blower door test. This test measures air infiltration into a structure. Reducing infiltration of outside air is a primary method of reducing energy usage. See **Figure 1-8**.
- Duct tightness testing. This test determines if conditioned air is leaking out of the ductwork.
- Thermal imaging. Thermal imaging equipment is used to identify locations of air infiltration and inadequate insulation.

Energy auditing is a good career for people who have a strong interest in environmental issues. A background in HVACR and construction practices is also helpful. Energy auditing is often taught as a standalone training program, and several certification programs are available.

Building Inspector

Building inspectors review construction work to ensure that the construction adheres to the applicable building codes. Work that meets the code requirements is approved by the inspector. Work that does not meet code requirements is identified by the inspector and must be corrected by the contractor. Some building inspectors review all building systems, while others focus on one particular area, such as electrical or HVAC. See **Figure 1-9**.

Many inspectors are employed by local governments. The inspection process usually begins even before construction starts, when plans are submitted to the building inspector's department for review. The review may result in approval or may require changes to bring the plan into compliance with codes and regulations. Once construction begins, inspections are made at specific stages of a project. All work must be completed to the satisfaction of the inspector.

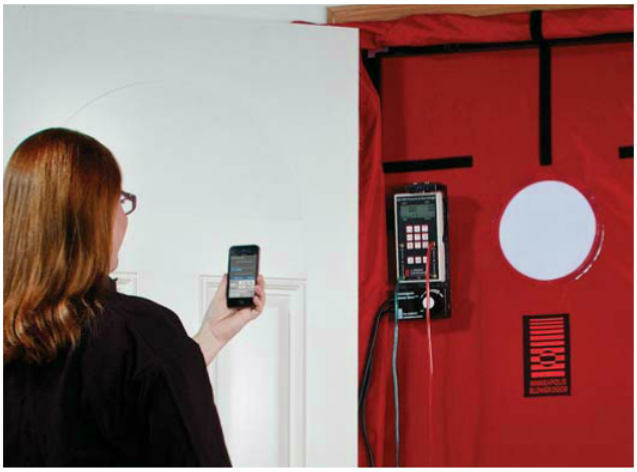

TEC (The Energy Conservatory)

Figure 1-8. An energy auditor collects data during a blower door test. Using this information, the energy audit will be able to determine if too much air is infiltrating into the building.

SpeedKingz/Shutterstock.com

Figure 1-9. A building inspector checking framing in a new residence. Building inspectors often have previous experience in a trade area such as HVACR.

Building inspectors normally have a strong background in the building trades and thorough knowledge of all local building codes and regulations. The career path for most inspectors begins with work in one of the trades areas.

HVACR Instructor

Teaching is generally regarded as one of the most rewarding professions. By helping someone learn new skills, you may be helping a student open doors to better employment opportunities and career paths. The following are some opportunities for HVACR instructors:

- Instructor in an HVACR program at a two-year college, technical college, or private training school, normally teaching the fundamentals of HVACR to students with little or no previous experience in the field.
- Corporate trainer, leading relatively short training sessions on specific products or topics for other employees within the company or other users of the company's products such as dealers and contractors. See **Figure 1-10**.
- Instructor for a training organization, delivering training courses for professionals in the HVACR industry.

Copyright Goodheart-Willcox Co., Inc.

Hampden Engineering

Figure 1-10. Training is an important part of the HVAC industry. The continuous development of new refrigerants, components, materials, systems, and service techniques provides many training opportunities.

Many HVACR instructors began their careers as HVAC technicians before switching careers. HVACR instructors must have excellent knowledge of HVAC systems, strong organizational skills, and excellent communication skills. They supplement their technical knowledge by earning teaching certifications or attending training.

HVACR Equipment Manufacturer Occupations

Knowledge and experience in the HVACR industry can lead to employment with HVACR equipment manufacturers. The companies that design, produce, and sell all of the components of air-conditioning and refrigeration systems employ a large number of people in a wide range of positions, including the following:

- Engineering lab technician—works on product testing, design, and development.
- Product technical support—provides support for people installing and servicing the company's products.
- Sales representative—sells the company's products to other businesses or consumers.
- Distributor/dealer—sells equipment and materials for specific companies within a defined region.

Pro Tip

Occupational Outlook Handbook

The US Bureau of Labor Statistics *Occupational Outlook Handbook* provides detailed information about many common occupations. The handbook includes descriptions of occupations, salary ranges, and projected future demand. This useful resource is available on the Internet.

1.2.3 Employment Outlook

The job outlook for those in the HVACR field is quite promising and strong. HVACR professionals are in demand and enjoy good income-producing potential and plentiful opportunities for growth. Unlike many jobs and careers, HVACR positions cannot be replaced by automation and cannot be outsourced.

Copyright Goodheart-Willcox Co., Inc.

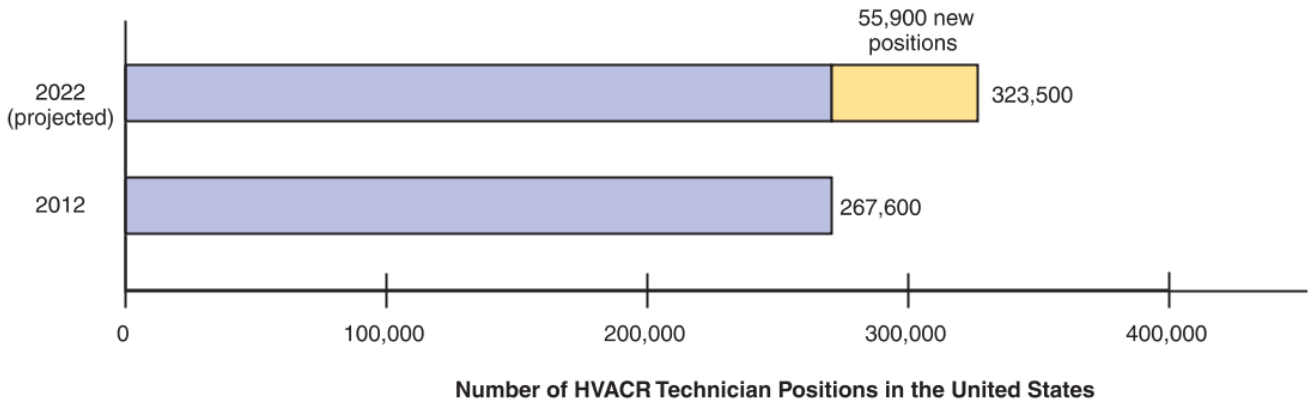

Goodheart-Willcox Publisher

Figure 1-11. This graph illustrates the expected increase in HVACR technician opportunities between 2012 and 2022. In addition to these new positions, many more job vacancies are expected due to retirements.

HVACR systems are becoming increasingly complex. As a result, applicants with a postsecondary educational experience or an apprenticeship are often preferred. It is projected that the job outlook for the ten-year period of 2012–2022 will see an increase of 21% in the HVACR field. See **Figure 1-11**. Refer to the US Bureau of Labor Statistics for other relevant information about a career as an HVACR technician.

Opportunities for advancement within the HVACR field are abundant. Technicians may wish to advance into supervisory or sales and marketing positions. At the contractor level, positions available include technician, installer, fleet manager, project manager, service manager, contractor. Emerging careers in the HVACR field include energy auditor, green-technology specialist, and performance testing specialist.

1.3 Beginning Your Career Search

It has often been said that "you don't get a second chance to make a first impression." While setting goals and mapping your career path, you must maintain a professional image in verbal and written communications. Often, the contacts and network you develop while in school and during your apprenticeships will lead to future job opportunities. Maintaining a positive and professional appearance is the first step in obtaining a job.

1.3.1 Sources for Career Opportunities

A number of websites offer information for the job seeker. Typically, these career websites allow companies to post information about available positions. Job seekers can post a résumé, search available job listings, and receive updates of select new job postings.

In addition, there are professional HVACR organizations that offer job postings on their websites. Examples of such sites include NATE, Careers in HVACR, ASHRAE, and ACCA. Trade journals, trade shows, contractors, distributors, manufacturers, and unions, including the United Association and the Sheet Metal Workers International Association, are also sources for employment information.

Pro Tip

Career Websites

When looking for a job, spend some time exploring job websites to see which provide the most listings of applicable positions. Review both general career websites and HVACR-specific websites. Learn to use the features of the most valuable websites. Your goal is to find as many available positions as you can.

Once you begin making contacts within industry, an effective way of obtaining job leads is networking. ***Networking*** is the process of connecting with other individuals within a group or industry. Joining industry organizations offers an opportunity for networking. By expanding the reach of your social and professional network, you can increase your potential exposure to employers.

Pro Tip

Social Media Profile

Your social media postings may be viewed by others. Always assume that anything you post will be viewed by a potential employer. Inappropriate posts could put your career at risk, so be cautious of your web presence.

Copyright Goodheart-Willcox Co., Inc.

1.3.2 Application Process

Most employers now post their job openings via the Internet. In such cases, the application process is conducted via the Internet as well. In preparation for applications, a résumé and cover letter are necessary. Always carefully proofread all materials you submit for possible errors.

Résumé

A résumé is often the first opportunity for an employer to get to know you. Your résumé briefly outlines your education and work experiences. It should be concise—preferably a single page and no longer than three pages. Your résumé should highlight skills and accomplishments, including any industry assessments or certifications you have achieved. Include details of the program you have attended, such as the program's accreditation, the length of the program, courses completed, and your accomplishments. In addition, it is helpful to have a list of three references. These can be teachers or college instructors, present or past employers, or family friends. Be sure to ask your references before listing them. A reference sheet should include the name, position, address, and phone number of the reference. Letters of recommendation are also beneficial and should speak to your integrity, work ethic, and achievements. **Figure 1-12** shows an example of a résumé format.

Cover Letter

A cover letter accompanies your résumé. Format your cover letter in the style of a professional business letter. Relate your cover letter to the specific position for which you are applying. The letter should include these items:

- Title of the position.
- Where you heard about the position.
- Your strengths, skills, and abilities as they relate to the position.
- Additional reasons you should be considered for the position.
- When you are available to begin work.
- Request for further discussion or an interview.

Figure 1-13 shows an example of a cover letter.

Job Application Form

Often, employers provide an employment application, either electronically or on paper. When completing an application by hand, write neatly. When completing an electronic application, proofread your entries carefully to eliminate misspelling and typos. Always provide truthful, accurate information in your applications.

Pro Tip

Obtaining an Internship

An internship is a great way to gain experience in the field you are studying. Many HVAC contractors may not actively seek interns, but if you contact a company and suggest an internship, they may consider hiring you. Try sending your résumé along with a compelling, professional cover letter to many local HVACR contractors requesting an internship with their company. Most will not be interested, but all it takes is one expressing interest to get your career started. Remember, an internship can benefit the employer as much as it benefits the student.

1.3.3 Interview Skills

After applying for a position, you may be asked to participate in an interview. An interview may be conducted over the phone or in person. Prior to an interview, research the potential employer and the details of the position for which you are applying. Prepare a few questions to ask at interviews. These questions can be about the company or about the position. For example, the following could be some potential questions to ask when interviewing for an HVACR service technician position:

- What are some of the challenges for new technicians starting with this company?
- How would you describe excellent performance for this position?
- Are there opportunities for advancement within or beyond this position?

When planning for an interview, a clean appearance is important. Be well groomed and professionally dressed. When being introduced, offer a firm handshake, make eye contact, and greet the interviewer by using their formal name (Mr. or Ms.). When participating in an interview, be a good listener and keep your answers brief and to the point. If possible, weave in an example of a similar situation you have encountered professionally. Do not have your cell phone on during an interview. The interviewer deserves your full attention. Do not chew gum during an interview. Many employers support a drug-free workplace and may require pre-employment drug tests and criminal background checks.

Within 24 hours of the interview, send a thank-you letter to the interviewer. Thank the interviewer for spending their time with you and for the opportunity

Copyright Goodheart-Willcox Co., Inc.

Michael J. Garcia

134 Lincoln Street
Wilton, CA 93232

(212) 555-1234
mjgarcia22@e-mail.com

Career Objective

To obtain an entry-level service technician or installer position in the HVACR industry.

Professional Experience

Heavy Metal Ducts, Holloton, CA — August 2014–present
Sheet Metal Helper

- Perform general construction labor, include material loading and jobsite cleanup.
- Install ductwork systems.
- Help perform duct testing.

Simpson Supply Co., Wilton, CA — May 2013–August 2014
Parts Clerk

- Worked with customers at parts counter, checked inventory system, and obtained parts.
- Conducted daily and monthly inventory checks.
- General stocking and cleaning throughout store.
- Delivered and picked up parts and equipment.

Education

Associate Degree in HVAC Technology — May 2014
Oceanside Community College

- GPA: 3.22/4.0
- Coursework included commercial and residential air-conditioning service and installation, commercial refrigeration, heat load calculations, duct sizing, blower door testing, and natural gas and electric heating.
- Obtained three HVAC Excellence employee-ready certifications: Electrical, Air Conditioning, and Light Commercial Refrigeration.
- Obtained EPA Section 608 certification.
- Participated in SkillsUSA chapter.

Community Service

Habitat for Humanity, volunteer, summers of 2012, 2013, 2014
Wilton Food Bank, volunteer, 2011–present

References

Available upon request.

Goodheart-Willcox Publisher

Figure 1-12. A résumé summarizes your education, work experience, and related information.

Copyright Goodheart-Willcox Co., Inc.

Michael J. Garcia
134 Lincoln Street
Wilton, CA 93232
(212) 555-1234
mjgarcia22@e-mail.com

April 23, 2017

Mr. James Williamson
Williamson Heating and Cooling
4392 East 134th Street
Wilton, CA 93232

Dear Mr. Williamson:

The HVAC Service Technician position you advertised on the Career Finder website is exactly the type of job I am seeking. After reviewing the job description and requirements, it was clear that my experience, skills, and interests are a perfect match for this opportunity.

While obtaining my associate's degree in HVAC Technology from Oceanside Community College, I gained both the theoretical knowledge and the hands-on skills required for this position. While working as a parts clerk at Simpson Supply Company, I developed strong customer service skills and gained a better understanding of HVAC parts and systems. In my current position as a sheet metal helper, I've gained valuable experience working at a variety of job sites and with diverse teams. I am anxious to apply the skills I have learned and to continue gaining new skills.

Please find my résumé enclosed with this letter. I would greatly appreciate an opportunity to interview for this position. Please contact me at your convenience by phone or e-mail to schedule an interview. I look forward to hearing from you.

Sincerely,

Michael J. Garcia
Michael J. Garcia

enclosure

Goodheart-Willcox Publisher

Figure 1-13. A cover letter allows you to highlight your strengths and show your enthusiasm when applying for a position.

Copyright Goodheart-Willcox Co., Inc.

to have met with them. Proofread the letter before submitting it. The letter should be pleasant, positive, and brief. End the thank-you letter with a statement of desire to become a member of the company's team.

On receipt of a job offer, respond promptly. When evaluating an employment offer, consider the work schedule, benefits, salary, job responsibilities, and potential for advancement. If it is necessary to decline a job offer, do so with tact and respect. In the future, you may decide that you would like to work for the company or interviewer.

Pro Tip

Dress for Success

When selecting an outfit for an interview, you want to follow the "rule of thumb" of dressing one level above appropriate on-the-job attire. For example, HVAC service technicians often wear uniforms. If you are interviewing for this position, you'd want to dress "one level above" a uniform. In this case, a casual button-down shirt and slacks would be appropriate attire for an interview.

1.4 Success in the Workplace

As an employee, the technician becomes the "face" of the company or organization. Follow the expectations regarding dress code and appearance within an organization. For example, some employers discourage visible tattoos or piercings. In addition, daily grooming ensures a presentable presence in the workplace.

Employers value good work habits. Such behaviors include punctuality, dependability, and responsibility. ***Punctuality*** is important. This means being on time for work and for appointments and also returning from lunch or breaks at the proper time. A clear understanding of the employer's rules and procedures for requesting vacation and sick time is necessary. Employers depend on their employees to carry out given tasks when scheduled. Unexpected absences or tardiness can cause a company to lose business.

Additional traits that are beneficial in the workplace include good time management and initiative. When asked to complete tasks, stay focused and work efficiently, making good use of your time. When you complete a task, always check your work for precision and accuracy. While at work, do not spend your time on tasks such as personal phone calls, texting, or e-mailing. Such tasks can be accomplished during lunch or break times.

Taking initiative is valued by employers. This involves seeing what needs to be done and doing it without being told. Those who take initiative require less direct supervision and appear more highly motivated than those who do not take initiative.

All companies value leadership. Leadership characteristics are critical for managers and supervisors. Any employee who exhibits the following leadership characteristics are more likely to advance in their careers:

- The ability to motivate others.
- The ability to solve problems.
- The ability to work as part of a team to accomplish a goal, **Figure 1-14**.
- The ability to help others capitalize on their strengths.
- The ability to serve as a role model for others.

Even as a new hire, you can begin developing these skills in your work habits. You can serve as a role model by working hard, being punctual, and doing good work. You can motivate others by having a positive attitude. If you complain about your work or your coworkers, you demotivate people. When you encounter a problem, develop the habit of thinking of potential solutions. Whenever you need to ask for help from a more experienced coworker, make sure you understand the reason for the answer. This will help you solve your own problems in the future.

1.4.1 Professional Behavior

In most work settings, you will be working with others as a part of a larger "team." Team members must work cooperatively and communicate clearly.

lisafx/iStock/Thinkstock

Figure 1-14. In any occupation, the ability to work cooperatively with others is imperative. Often, HVACR technicians work as a team on large projects or work with other construction workers in new installations.

Copyright Goodheart-Willcox Co., Inc.

Each employee is an important "part" of the "whole," and each person has specific roles and responsibilities. Employers appreciate employees who can get along with others and who offer support and assistance to others. A positive attitude is appreciated. A smile and courteous actions will result in pleasant relationships and a positive work environment.

In any work environment, there will be conflicts or disagreements. When these occur, handle the conflict professionally, courteously, and calmly. Using problem-solving and critical-thinking skills, analyze the problem and develop a workable solution.

Listening is an important component of communication. If you are unclear about a direction or statement, request clarification. When listening, remain focused on the person speaking and maintain eye contact. Let the person finish their statements before you begin speaking.

Communication in the workplace is not only verbal, but also includes messages transmitted by text, e-mail, and voice mail. Always be professional, courteous, and prompt when responding to these types of messages. Proofread written messages for accuracy prior to sending. In addition, when returning calls or leaving a voice mail, be professional, prompt, pleasant, and concise.

1.4.2 Lifelong Learning

The term ***lifelong learning*** refers to updating and increasing one's knowledge of his or her career field over the course of a lifetime. In today's fast-paced world and with the increasing influence of technology, professional development is a critical career component. Often, employers may offer in-house training opportunities. An additional source of training and workshops is through professional organizations.

In the HVACR industry, "lifelong learning" is crucial. You must stay informed of many topics, including the following:

- Changing government regulations related to refrigerants.
- New refrigeration and air-conditioning system components.
- New technology in control systems.
- New tools and equipment that may improve the quality and productivity of your work.

1.4.3 Skills and Personal Traits

Certain skills and personality traits lend themselves to success within the HVACR career path. The types of personal traits that are helpful within this field include being detail oriented, being organized, the ability to work well under pressure, and the ability to work both independently and as a member of a team. Skills that are beneficial to the HVACR technician include mechanical aptitude, a comfort level with technical processes, the ability to think critically and analyze and interpret data and situations, enjoying "hands-on" work, and the ability to communicate orally and in writing.

As noted previously in this chapter, the HVACR field is becoming increasingly driven by technology. For this reason, HVACR technicians must be knowledgeable and comfortable using a computer, digital instruments and gauges, and wireless and electronic devices. See **Figure 1-15**.

1.5 HVACR-Related Associations and Organizations

The HVACR industry includes a large number of associations and related organizations. A comprehensive list is included in the *Appendix*. Involvement in service organizations and industry associations provides opportunities for networking and learning. In addition, many of these organizations are excellent sources of information about careers, the HVACR industry, and service procedures.

Pro Tip

Student Memberships

Some professional organizations offer student memberships at a reduced rate for those who are enrolled in HVACR training. Participation in such an organization may provide benefits including information about scholarships, a magazine or newsletter subscription, an opportunity to attend conferences and meetings, or access to job postings. Student memberships are great items to list on your résumé and may provide excellent networking opportunities. Associations that may offer student memberships include Air Conditioning Contractors of America (ACCA), American Society of Heating, Refrigeration, and Air Conditioning Engineers (ASHRAE), and the Refrigeration Service Engineers Society (RSES).

1.6 Certification

Certification is an aid in identifying the scope and level of a person's retained knowledge and ability to apply that knowledge. Exams identify if a person has mastered the subject area or needs additional training. To aid HVACR technicians throughout each stage of their career, the HVACR industry offers different

Copyright Goodheart-Willcox Co., Inc.

Stride Tool Inc.

Figure 1-15. HVACR technicians must be comfortable using computer technology. Here, a technician views gauge manifold measurements on a tablet computer. The gauge manifold transmits the information wirelessly to the tablet.

certification programs for students, apprentices, experienced technicians, and educators.

With technology and the ever expanding growth of knowledge, it is imperative that technicians be able to confirm their professional knowledge and competency. Certification has become a hallmark of quality and a demonstration of a commitment to developing one's skills. ***Certifications*** are credentials that show an individual has attained a level of competence regarding a specific topic or set of competencies. Certifications can assist a technician in obtaining positions and career advancement. There are a variety of certifications available including entry level, professional, and specialty.

1.6.1 Student Assessments and Entry-Level Certifications

Within every career path there are various levels. The initial level at which you enter a career path is the entry level. Within the HVACR field, the entry level is often participation in a co-op program or an apprenticeship program.

Many HVACR programs include end-of-course or end-of-program student assessments and entry-level certifications. These standardized assessments and certifications are created and maintained by national HVACR and testing organizations.

Standardized assessments are used as an instrument to measure achievement. Results can be compared to other students across the country who have taken the same exam. These exams show that you have retained the knowledge needed to move on to the next level of training. In addition, assessments can help identify specific areas or topic where you need additional training.

Entry-level certifications are a series of discipline-specific, end-of-course exams. These exams validate that you have retained the knowledge in that discipline necessary for employment in the HVACR industry. By attaining multiple certifications during the course of your HVACR education, you build a working portfolio of your training and accomplishments.

Pro Tip

Assessments and Certifications

Be sure to complete any assessment and certification opportunities offered by your school. These accomplishments are meaningful to potential employers, because the assessments and certifications provide "proof" that you possess a certain level of knowledge. Be sure to list these accomplishments on your résumé.

1.6.2 Professional and Specialty Certifications

Professional certifications are offered to experienced HVACR technicians. These certifications consist of written and hands-on exams that prove demonstration of knowledge. Typically, 2–5 years of work experience is required prior to attempting such exams.

In addition to professional certifications, the HVACR technician may wish to or may be required to obtain specialty certifications. ***Specialty certifications*** are certifications that often focus on a specific topic that is either outside the scope of work for a typical HVACR technician or more specific than topics included in standard professional certification. For example, specialty certifications cover topics such as energy auditing, heat load calculations, and sustainable practices.

1.6.3 EPA Certification

The EPA requires all technicians who service air-conditioning and refrigeration equipment that use certain types of refrigerants to be certified. This requirement includes all persons who install, maintain, service, or repair equipment and may reasonably have the opportunity to release these refrigerants into the atmosphere. In addition, anyone who disposes of refrigerant or air-conditioning equipment must be certified.

Copyright Goodheart-Willcox Co., Inc.

EPA certification is achieved by successfully completing an EPA-approved test. This is required by Section 608 of the Clean Air Act. Refer to the *Appendix* for detailed information about the EPA Section 608 certification.

1.6.4 Certifying Organizations

Several organizations offer various types of HVACR certifications. The following sections briefly describe some of the certifications offered by some certifying organizations. For additional information, refer to the websites of these organizations. See **Figure 1-16**.

HVAC Excellence

HVAC Excellence offers both employment-ready certifications (for students) and professional certifications (for working technicians). Many certifications are available at both levels, including topics such as the following:

- Principles of Electrical and Refrigeration Theory (prerequisite for all exams).
- Residential Air Conditioning.
- Light Commercial Air Conditioning.
- Light Commercial Refrigeration.
- Heat Pumps.
- Gas Heat.
- Electric Heat.
- Residential and Light Commercial Hydronic Heat.

A candidate must have two years of experience before taking the professional certification exams.

HVAC Excellence also offers several Masters Specialist certifications. To attain a Master Specialist certification, a candidate must have at least three years of experience, must attain the related professional certification, and must successfully complete a practical, or hands-on, exam.

HVAC Excellence; North American Technician Excellence

Figure 1-16. These technicians wear certification patches on their uniforms. Customers have greater confidence in a certified technician.

NATE (North American Technical Excellence)

NATE (North American Technical Excellence) is an independent professional certification organization. NATE offers multiple certifications divided into installation and service (1–2 years of experience recommended) and also senior level categories (5 years of experience recommended). Certification is valid for two years, after which time the technician must recertify.

Installation, service, and senior certifications are available in several areas, including the following:

- Air conditioning.
- Air distribution.
- Heat pumps.
- Gas heating.
- Oil heating.
- Light commercial refrigeration (service only).
- Commercial refrigeration (service only).
- HVAC efficiency analyst (senior only).

NATE also provides Industry Competency Exams (ICE), which are assessments for HVAC students. These exams measure basic competencies for entry-level HVACR technicians.

RSES (Refrigeration Service Engineers Society)

RSES offers three classifications of membership: Certificate Membership (CM), Active Specialized Member (SM), and Certificate Member Specialist (CMS).

Certificate Membership (CM) is earned on successful completion of an exam that tests a wide range of knowledge required in the installation and servicing of refrigeration and air conditioning equipment.

Copyright Goodheart-Willcox Co., Inc.

An understanding of the fundamentals of mechanical refrigeration theory, and a working knowledge of installation, service, and troubleshooting, is required.

Active Specialized Member (SM) and Certificate Member Specialist (CMS) are RSES membership levels that can be earned by successfully completing one or more written exams. Currently, there are eight exams offered, each focusing upon a specialized area of expertise:

- Commercial Air Conditioning.
- Commercial Refrigeration.
- Controls.
- Domestic Service.
- Dynamic Compression.
- Heating.
- Heat Pump.
- HVACR Electrical.

UA Star

The United Association (UA) is a union of plumbers, fitters, welders, and HVACR service technicians. Technicians who have completed a UA apprenticeship program can attain UA STAR certification. Currently, three UA STAR exams are available for HVAC: STAR HVACR Mastery, STAR Commercial Refrigeration Mastery, and STAR Residential Light Commercial Mastery.

1.7 Licensing

Some states require state licensing for HVACR contractors or HVACR technicians. The types of licenses and requirements vary greatly from state-to-state, so be sure to research the licensing requirements (if any) in your state or municipality. In some cases, a contractor or technician must be licensed in order to work on relatively large projects.

The processes for obtaining a license vary, but may require any or all of the following:

- Payment of an application fee.
- Experience working in the HVACR field (typically 2–5 years).
- Adequate performance on a state licensing exam.

Once the application process is approved, an additional license fee is normally required to obtain the license. Licenses are generally valid for one year. In most cases, license renewal requires only payment of the license fee.

Pro Tip

Licensing Requirements

State licensing requirements benefit qualified HVAC contractors and the general public. Licensing requirements prevent unqualified and untrained individuals from performing HVACR service.

Copyright Goodheart-Willcox Co., Inc.

Chapter Review

Summary

- A job is short-term employment, while a career is an opportunity to increase skill and attain professional advancement.
- Career clusters are broad categories of employment fields. These can be further divided into several pathways. HVACR is generally part of the Architecture and Construction career cluster.
- The work of an HVACR technician is divided into installation work and service work.
- The HVACR field includes many occupations, including engineer, designer, drafter, estimator, energy auditor, building inspector, trainer, and product support technician.
- The employment outlook for HVACR technicians is good, with a 21% increase in positions forecast for the coming years.
- Career opportunities may be found by searching career and HVACR websites and through industry contacts and networking.
- To apply for a position, submit a résumé, a cover letter, and any relevant information that may be requested on a job application form.
- Before an interview, research the company and position, prepare a list of questions, and arrange to arrive a few minutes early. For an interview, dress and groom professionally, listen attentively, make good eye contact, and exhibit polite behavior.
- Good workers groom properly, manage time effectively, take initiative, stay focused, and complete tasks efficiently.
- Professional behavior involves working as a team, maintaining a positive attitude, listening attentively, developing solutions to problems, and communicating well.
- With changes in technology, system designs, and building/manufacturing regulations, lifelong learning is necessary in an HVACR career.
- Involvement in HVACR-related associations and organizations provides opportunities for networking and continued learning.
- Attaining entry-level and professional certifications can make you a more attractive candidate for job opportunities and provides you with credibility when dealing with customers.
- Some states require licensing for HVACR contractors and technicians. This usually requires work experience, passing an exam, and paying an application fee.

Review Questions

Answer the following questions using the information in this chapter.

1. HVACR generally falls into the _____ career cluster.
   A. Architecture and Construction
   B. Agriculture
   C. Finance
   D. Hospitality and Tourism
2. The initial setup of HVACR equipment and systems is _____ work.
   A. installation
   B. management
   C. service
   D. None of the above.
3. Fixing and performing maintenance on existing systems is _____ work.
   A. installation
   B. management
   C. service
   D. None of the above.
4. The career requiring the highest level of education and licensing is an HVACR _____.
   A. drafter
   B. engineer
   C. estimator
   D. technician
5. To develop a bid, an estimator generally adds together the cost of the following, *except* _____.
   A. emotional investment
   B. equipment and materials
   C. labor and time required
   D. permits and inspections
6. An energy auditor generally performs the following tests, *except* for _____.
   A. amperage draw on compressor
   B. blower door test
   C. duct tightness test
   D. thermal imaging

Copyright Goodheart-Willcox Co., Inc.

7. Building inspectors ensure that a building project adheres to _____.
   A. applicable codes
   B. contemporary style
   C. fashionable design
   D. principles of good taste
8. A career search is enhanced by _____, which is the process of connecting with other individuals within a group or industry.
   A. certifying
   B. financing
   C. licensing
   D. networking
9. An application process will usually involve the following paperwork, *except* _____.
   A. application form
   B. cover letter
   C. résumé
   D. work order
10. After an interview for a position, send a _____ to the interviewer(s).
    A. bill
    B. receipt of sale
    C. thank-you letter
    D. cover letter
11. Employers value good work habits. These include the following, *except* _____.
    A. being dependable
    B. being a gossip
    C. being punctual
    D. being responsible
12. Characteristics of good leadership include the following, *except* _____.
    A. criticizing coworkers
    B. motivating others
    C. serving as a good role model
    D. solving problems
13. Professional behavior includes the following, *except* _____.
    A. analyzing a situation for a workable solution
    B. complaining about coworkers
    C. maintaining a positive attitude
    D. working as a team
14. All persons who intend to install, maintain, service, or repair HVACR equipment should first acquire _____ certification.
    A. EPA
    B. GAMA
    C. organic
    D. specialty
15. HVACR state licensing generally requires the following, *except* _____.
    A. an application fee
    B. a four-year college degree
    C. HVACR work experience
    D. passing a licensing exam

Copyright Goodheart-Willcox Co., Inc.

CHAPTER 2 Safety

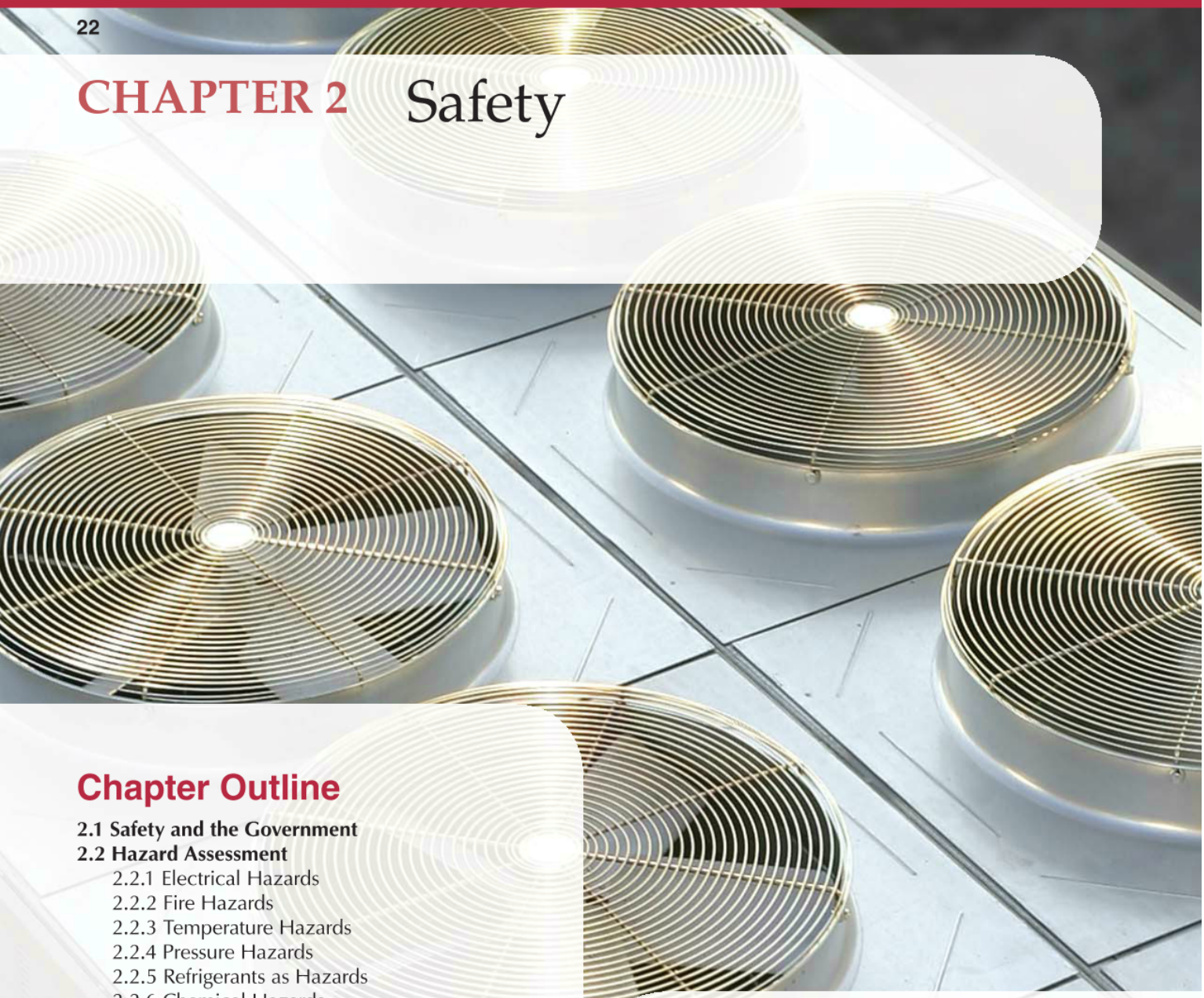

Chapter Outline

2.1 Safety and the Government
2.2 Hazard Assessment
- 2.2.1 Electrical Hazards
- 2.2.2 Fire Hazards
- 2.2.3 Temperature Hazards
- 2.2.4 Pressure Hazards
- 2.2.5 Refrigerants as Hazards
- 2.2.6 Chemical Hazards
- 2.2.7 Breathing Hazards

2.3 Personal Protective Equipment (PPE)
- 2.3.1 Head Protection
- 2.3.2 Hearing Protection
- 2.3.3 Eye Protection
- 2.3.4 Respiratory Protection
- 2.3.5 Protective Clothing

2.4 Safe Work Practices
- 2.4.1 Lifting
- 2.4.2 Ladder Safety
- 2.4.3 Scaffolding Safety
- 2.4.4 Fall Protection Training
- 2.4.5 Confined Spaces
- 2.4.6 Hand and Power Tools
- 2.4.7 First Aid Procedures
- 2.4.8 Safety Certifications

Learning Objectives

Information in this chapter will enable you to:

- Describe OSHA and its purpose.
- Properly assess electrical, fire, temperature, pressure, refrigerant, chemical, and breathing hazards.
- Explain the components of a safety data sheet (SDS).
- Discuss the need for personal protective equipment (PPE) for head, hearing, eye, and respiratory protection.
- Exercise safe practices when lifting, using a ladder or scaffold, for fall protection, in confined spaces, and for hand and power tools.

Technical Terms

air-purifying respirator
ASHRAE Standard 34
confined space
Globally Harmonized System (GHS)
hazard
Hazard Communication Standard (HCS)
hazard pictogram
hazard statement
lockout (LO)
lockout/tagout (LOTO)
Occupational Safety and Health Act (OSHA)
personal protective equipment (PPE)
safety data sheet (SDS)
signal word
stationary refrigerant detector
supplied-air respirator
tagout (TO)

Introduction

Safe HVACR installation and repair work requires trained and alert technicians. It is important to be aware of the work hazards, correct procedures, and protective equipment that will keep you safe while at work. Most hazards are avoidable and most accidents are preventable. The four hazards that are most common in the trades include: falls, electrical accidents, "caught-between" accidents (for example, between heavy equipment and a wall), and "struck-by" accidents (hit by a falling object).

Video

- Safety

2.1 Safety and the Government

The national law that covers workplace safety is the ***Occupational Safety and Health Act (OSHA)***. This law covers the safety requirements of equipment as well as the personal safety of the technician. Become familiar with the relevant safety standards by visiting the OSHA website. Information can be found in different categories, such as general industry, construction, maritime, and agriculture.

Companies are required to report to OSHA every fatality or permanently disabling injury or any accident involving three or more hospitalized injuries. Carelessness can result in injury or a fatality; therefore, safety is a shared responsibility that must be taken seriously.

HVACR installation and repair can be done indoors and out, in residential and commercial settings. The correct clothing and personal protective equipment (PPE) will ensure the comfort and safety of the technician. In addition, working on rooftops, in ceiling plenums, and on suspended ductwork presents potential fall hazards. It is important to evaluate work conditions for fall hazards and use safe practices for climbing, ladders, and scaffolding.

A technician should be alert to emergency procedures and the location of main electrical disconnects and gas shutoff valves. In addition, chemicals and refrigerants can be dangerous to the skin, eyes, or respiratory system. It is the technician's responsibility to be aware of safety data sheets (SDS) for a particular job. During certain seasons, a technician may work an excessive number of hours and become tired and careless. It is important to remain alert and aware on the job.

2.2 Hazard Assessment

A ***hazard*** is a potential for harm. According to OSHA, "In practical terms, a hazard often is associated with a condition or activity that, if left uncontrolled, can result in an injury or illness." Identifying, eliminating, or minimizing hazards will ensure the safety of the technician and others. OSHA provides detailed plans for conducting a formalized hazard assessment. For additional information, visit the OSHA website.

The OSHA audit program is mandated by law and requires a yearly audit. However, safe practices and evaluation of risks should be an on-going process. A simple hazard assessment should be performed by the technician on arrival at the work site. This should include an awareness of emergency exits, the location of first aid equipment, the presence of hazardous chemicals or materials, and ventilation concerns. Common workplace hazards are described in the following sections.

2.2.1 Electrical Hazards

Second only to a nuclear reaction, an electrical arc is the hottest thing on earth. An electrical arc is seven times the temperature at the sun's surface. Electricity may cause shock, burns, explosions, and electrocution. Electrical hazards are the most difficult hazards to identify. Often, there are no obvious visible signs to alert a technician of a risk.

A well-designed and enforced lockout/tagout (LOTO) policy is critical for safety. Systems that require lockout include electrical, hydraulic, pneumatic, mechanical, and thermal. Never expect others to shut off a power source. A technician must personally shut off the power source to ensure that the circuit is de-energized. Assume a power source is live until you directly shut it off, **Figure 2-1**.

Lockout/tagout (LOTO) is actually two separate practices that are often combined into one practice. ***Lockout (LO)*** is the practice of locking a mechanism or an electrical switch in the open position so that maintenance or service work can be performed safely. ***Tagout (TO)*** is the practice of placing a tag on a mechanism

Uline

Figure 2-1. Include your name and relevant information on a tagout.

Copyright Goodheart-Willcox Co., Inc.

or an electrical switch to inform others that service work is in process and that this mechanism or switch's position should not be changed. Often, lockout and tagout are combined into ***lockout/tagout (LOTO)***, in which an electrical switch is locked open and tagged, **Figure 2-2**.

According to OSHA standards, a technician must "use lockout devices for equipment that can be locked out. Tagout devices may be used in lieu of lockout devices only if the tagout program provides employee protection equivalent to that provided through a lockout program." Electrical panels have a location for a padlock to be used for lockout. In order to prohibit others from accidentally powering on a unit, the panel should remain locked, and the technician should hold the key. See **Figure 2-3**.

On some occasions, it may be necessary to work with the power on. Confirm the voltage of the circuit being checked and verify that the range selector on the testing instrument is set correctly. Make certain that only the meter probes touch live equipment. Keep all skin and parts of the body clear of electrical terminals and connections.

Safety Note

Part of the Circuit

Do not become a part of the electrical circuit by becoming a conductor between two live wires or a live wire and a ground. The human body can conduct electricity. Move with care and take precautions to remain alive and not become part of an electrical circuit.

Safety Note

Moisture and Electricity

Never stand in wet or damp areas when checking live connections. Water conducts electricity, and it could make you part of the circuit. When taking electrical measurements, wear shoes with insulated soles and heels. Note signs requiring PPE, such as eyewear or footwear.

Electrical shock occurs when the body becomes a part of the circuit. As electricity flows through the body, it affects the heart and may stop it from pumping, resulting in death. Every technician should complete a first aid course including CPR.

Ideal Industries, Inc.

Figure 2-2. A lockout/tagout kit for different electrical switch and valve builds.

Copyright Goodheart-Willcox Co., Inc.

Uline

Figure 2-3. Various forms of electrical lockout equipment is available.

When using electrical tools, ensure they are grounded and are connected only to grounded circuits. Older handheld tools were often designed with metal frames. If a tool is metal and has a power cord, confirm there is a grounding wire in the power cord. In the event that the motor develops a short to the metal casing, the ground wire will carry the current rather than your body. This will result in a fuse or circuit breaker opening the circuit. If an extension cord is used, it should be connected to a ground-fault circuit interrupter (GFCI) receptacle. A GFCI is a fast-acting circuit breaker that will shut off electric power within as little as 1/40 of a second in the event of a ground fault. An electrical current leak will trigger the GFCI to open, interrupting current flow. Modern hand tools tend to be plastic-cased and often battery-operated. The motor and tool are insulated within the tool, ensuring worker safety. Such tools are both safe and convenient to use.

Exercise extreme care when using a screwdriver or other tools in an electrical panel when the power is on. A short circuit to ground could occur through a metal tool, which may cause an electrical arc, resulting in electrical burns.

Safety Note

Jewelry and Electricity

Do not wear jewelry when working on live electric circuits. Since jewelry is often metal, it will conduct electricity. It could cause accidental shock or burns.

2.2.2 Fire Hazards

HVACR work may involve dealing with solvents and fuels. Such materials are flammable and combustible. Therefore, a technician must use caution when working near items capable of producing ignition, such as burners and torches. Look for symbols indicating flammability, **Figure 2-4**.

Fire is a chemical reaction. A portable fire extinguisher can be used to extinguish a small fire. A technician should be familiar with the different types of fire extinguishers and how to use them. The average fire extinguisher contains only ten seconds of extinguishing power. Therefore, time is of the essence.

There are different classes of fires, based on the type of material being consumed, **Figure 2-5**. Fire extinguishers are marked with symbols identifying the types of fires they will extinguish. Always make sure the fire extinguisher is marked for the appropriate type of fire before using it.

Safety Note

Extinguishing Electrical Fires

Never use water on an electrical (Class C) fire due to the high risk of electrical shock. Only use a Class C–rated fire extinguisher.

OSHA

Figure 2-4. This sign indicates that a substance is flammable, is self-heating, emits flammable gas, or self-reacts.

Copyright Goodheart-Willcox Co., Inc.

Fires	Type	Use	Operation
Class A Fires Ordinary Combustibles (Materials such as wood, paper, textiles.) *Requires... cooling-quenching* Old: A New:	**Soda-acid** Bicarbonate of soda solution and sulfuric acid 	Okay for use on: A Not for use on: B, C, D	Direct stream at base of flame.
Class B Fires Flammable Liquids (Liquids such as grease, gasoline, oils, and paints.) *Requires...blanketing or smothering.* Old: B New:	**Pressurized Water** Water under pressure 	Okay for use on: A Not for use on: B, C, D	Direct stream at base of flame.
Class C Fires Electrical Equipment (Motors, switches, etc.) *Requires... a nonconducting agent.* Old: C New:	**Carbon Dioxide (CO_2)** Carbon dioxide (CO_2) gas under pressure 	Okay for use on: B, C Not for use on: A, D	Direct discharge as close to fire as possible, first at edge of flames and gradually forward and upward.
Class D Fires Combustible Metals (Flammable metals such as magnesium and lithium.) *Requires...blanketing or smothering.* Old: D New:	**Foam** Solution of aluminum sulfate and bicarbonate of soda 	Okay for use on: A, B Not for use on: C, D	Direct stream into the burning material or liquid. Allow foam to fall lightly on fire.
	Dry Chemical 	Multi-purpose type: Okay for A, B, C; Not okay for D Ordinary BC type: Okay for B, C; Not okay for A, D	Direct stream at base of flames. Use rapid left-to-right motion toward flames.
	Dry Chemical Granular type material	Okay for use on: D Not for use on: A, B, C	Smother flames by scooping granular material from bucket onto burning metal.

Goodheart-Willcox Publisher

Figure 2-5. Always check that a fire extinguisher is compatible for use with an intended fire.

Copyright Goodheart-Willcox Co., Inc.

Using a Fire Extinguisher

The following describes correct usage of a fire extinguisher. Remember the initials **P.A.S.S.** This stands for **P**ull, **A**im, **S**queeze, and **S**weep.

1. Pull the pin at the top of the extinguisher. This will release a locking mechanism allowing the extinguisher to discharge.
2. Aim at the base of the fire. Do not aim at the flames. To extinguish a fire, you must extinguish the fuel.
3. Squeeze the lever slowly, releasing the extinguishing agent. Releasing the handle will cause the discharge to stop.
4. Sweep from side to side. Use a sweeping motion, moving the fire extinguisher back and forth until the fire is out.

Safety Note

Torch Flame near Combustibles

When using a torch near combustible materials or wood or finished surfaces, use a heat shield. This is also true when using a torch near wires or within a cabinet, **Figure 2-6**.

Safety Note

Ventilation during Welding

Do not braze or weld in an enclosed, nonventilated area. A welding or brazing torch consuming oxygen could cause the oxygen level to fall too low for safety.

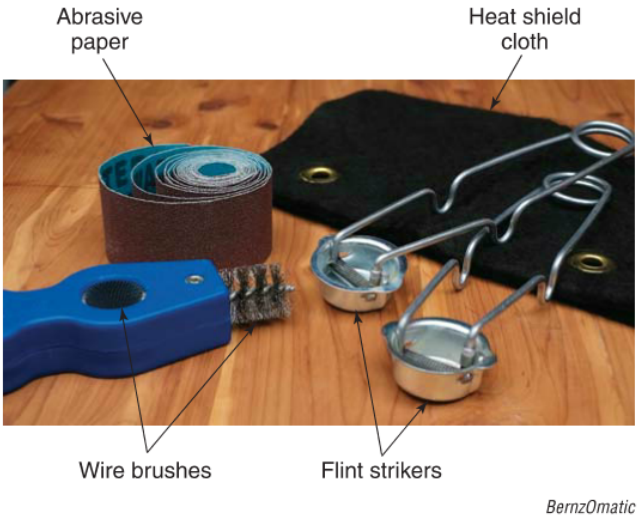

BernzOmatic

Figure 2-6. A heat shield cloth may be available as part of an accessory kit for a torch.

2.2.3 Temperature Hazards

During installation and servicing of HVACR equipment, a technician could be exposed to temperature extremes. When working outdoors, wear sunscreen and appropriate clothing for protection from UV rays. Working in hot temperatures can cause one's body to overheat. Signs of heat-related illness include an elevated body temperature, headache, nausea, weakness, dizziness, fainting, and confusion. Be alert and look for signs of overheating. Drink plenty of water to stay well hydrated.

When working outdoors during the winter, wear weather-appropriate clothing and waterproof boots. Layers of clothing work well for retaining body heat. Be alert to hypothermia and frostbite. Hypothermia symptoms include shivering, increased pulse and breathing rates, loss of coordination, confusion or disorientation, and a loss of consciousness. If you suspect someone of having hypothermia, call emergency services and move that person to a warm area.

Frostbite occurs when temperatures are below freezing. Symptoms include reddened skin that develops gray/white patches. There may be numbness in the affected area.

Safety Note

Wind Chill

Cold temperatures are a danger, but a technician must also be alert of wind chill. As temperatures drop below normal and wind speed increases, heat leaves the body more rapidly.

Attics, rooftops, and mechanical rooms pose specific risks to the technician. They may be extremely hot or cold, depending on the location and weather. Wear appropriate clothing for the location. Extreme temperatures may be encountered indoors within the work environment as well. When working in a low-temperature freezer, dress appropriately with cold weather clothing.

HVAC ducting may contain hot or cold air, and hydronic piping may contain hot or cold water. Label pipes with material and flow direction. Note any potential hazards. Always wrap hot pipes to avoid burns. Be sure the jobsite first aid kit includes material to treat burns, **Figure 2-7**.

Refrigerants have the potential to cause both frostbite and burns. As refrigerant pressure decreases, refrigerant temperature also decreases, which increases risk of freezing. If refrigerant pressure increases, temperature increases, which increases the potential for burns. Severity of burn damage is dependent on the temperature and pressure of the refrigerant, the amount of refrigerant, and the length of time of exposure.

Copyright Goodheart-Willcox Co., Inc.

Uline

Figure 2-7. Be prepared to quickly treat burns with a burn kit. These typically include burn dressings, gels, instant cold compresses, nonstick pads, and bandages.

2.2.4 Pressure Hazards

There are a variety of pressure vessels that a technician encounters, such as accumulators, liquid receivers, refrigerant cylinders, fuel cylinders, boilers, and hot water tanks. Low-pressure and high-pressure boilers and commercial hot water tanks require periodic inspections. A placard on or near a vessel should indicate when it was inspected and the due date for its next inspection. A visual inspection of accumulators and receivers is recommended. Note any rust, corrosion, or cracks.

Refrigerant Cylinder Safety

Refrigerant cylinders contain gas under pressure, **Figure 2-8**. Use caution and care when handling.

OSHA

Figure 2-8. This sign indicates that a cylinder contains gas under pressure.

Improper usage can result in damage to property, serious injury, or death. Refillable refrigerant cylinders must be inspected every five years. The date for inspection should be stamped on the cylinder. Information on a refrigerant cylinder label should include the following:

- Type of refrigerant.
- Net weight of the refrigerant.
- Color coding.
- TDG (transportation of dangerous goods) requirements.
- Bar coding.
- SDS (safety data sheet) reference.

Obtain an SDS for each specific refrigerant used and follow manufacturer instructions. Refrigerant cylinders should have a cylinder pressure relief valve located at the top in the vapor space. If pressure builds up too high, the relief valve will begin releasing vapor. As vapor escapes, pressure is reduced. Some of the liquid in the cylinder vaporizes to occupy space left by the escaping vapor. After pressure reduces adequately, the relief valve closes to retain the remaining refrigerant charge.

A refrigerant cylinder may have a fusible plug. This is made of a material with a low melting temperature. If a cylinder becomes overheated, its fusible plug melts to release the entire refrigerant charge. This prevents the cylinder from rupturing or exploding, but it also results in the loss of the cylinder's entire refrigerant charge.

Safety Note

Cylinders and Heat

Never heat a refrigerant cylinder with a flame. Do not allow a cylinder to reach a temperature more than 125°F. Higher temperature in a confined volume means higher pressure.

Refillable refrigerant cylinders should not be filled more than 80%. Do not drop a refrigerant cylinder. A cylinder dropped without a cap on could become a deadly projectile powered by inner pressure. Move the cylinder only while the protective cap is on. If a cylinder is too heavy to carry, firmly strap it to a cart in a vertical position with its protective cap secured on. If a cylinder were to fall over, its cap would protect the valve, preventing it from breaking off. Never roll a cylinder on its base or lay it down to roll it.

Do not use cylinders that are dented, rusted, or damaged. Damaged cylinders may fail at lower pressures than specified. Examine a cylinder's valve assembly for damage. Store and transport cylinders in a vertical position with the valve at the top.

Copyright Goodheart-Willcox Co., Inc.

Careless handling of a refrigerant cylinder may result in a release of refrigerant and result in frostbite, skin damage, or blindness. Wear safety glasses with side shields or a full-face shield, safety shoes, long pants, a long-sleeved shirt, and gloves. Avoid spilling refrigerant on skin or getting it in the eyes. If exposed, wash skin with soap and water. If in contact with the eyes, flush with water and seek medical assistance. Do not breathe refrigerant fumes. Do not smoke in an area containing refrigerant vapor.

Safety Note

Refrigerant in Confined Spaces

Exercise caution when using or handling fluorinated refrigerants. Heavy concentrations in a confined space can displace oxygen and lead to suffocation.

Other Pressurized Cylinders

Nitrogen is used in some methods of leak detection and is also used in refrigeration system servicing to purge air from tubing during welding and brazing. A low pressure of 1–2 psi is used for this purging process. Commercial nitrogen cylinders contain approximately 2500 psi of pressure at room temperature. Therefore, the nitrogen must be pressure-regulated prior to use. Nitrogen under full cylinder pressure could burst a weak point in a refrigeration system and could be quite dangerous. Always use an approved pressure regulator attached to the outlet of a compressed gas cylinder, **Figure 2-9**.

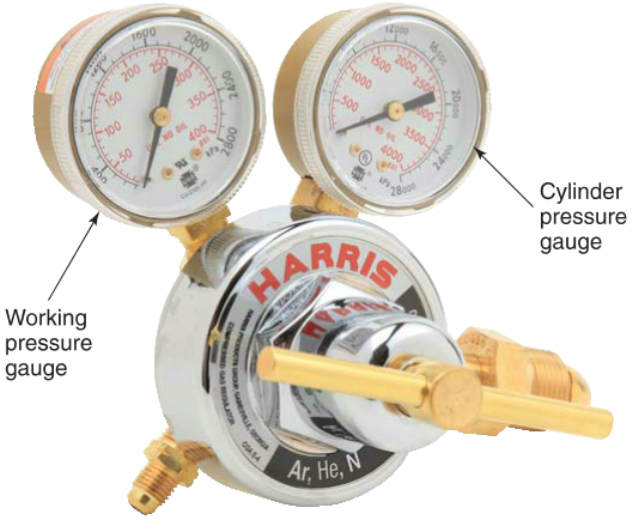

Harris Group

Figure 2-9. A pressure regulator may have two pressure gauges. One monitors cylinder pressure, and the other shows the working pressure in the hose.

Oxygen also must be regulated due to its high pressure. Oxygen may not be combined with oil. Oil residue located in an oxygen regulator connection can cause an explosion, **Figure 2-10**.

Safety Note

Gas for Proper Procedures

Oxygen or any combustible gas should never be used to test for pressure or leaks. These gases may react explosively with oil.

Oxygen and acetylene are often used together. Acetylene is extremely explosive. A pressure-reducing regulator must be used with acetylene. In addition, when moving a cylinder, an approved hand truck with strap must be used and the protective cap must be in place. During storage, cylinders must be upright in a vertical position, chained, and separated.

2.2.5 Refrigerants as Hazards

ASHRAE Standard 34 names refrigerants and assigns safety classifications according to their flammability and toxicity. There are two classes of toxicity and three classes of flammability, **Figure 2-11**.

Many refrigerant vapors and gases are heavier than air. In a confined space these vapors and gases can displace oxygen, resulting in a buildup of fumes. A technician may not note that the concentration of refrigerant is becoming excessive until it is too late. Symptoms include dizziness and numbness. If this occurs, quickly move to an area with fresh air. Always ensure proper ventilation in a workspace. Be aware of where entrances, stairs, and elevators are located in case of the need for a quick evacuation.

Safety Note

Ventilation Requirements

Ensure proper ventilation prior to beginning a job. Use fans to add fresh air into a confined space. Cross ventilation will minimize refrigerant concentrations.

Toxic and combustible refrigerant gases in mechanical equipment rooms are potentially dangerous and can create unsafe conditions. Equipment in these rooms may leak harmful combustible or toxic gases including environmentally harmful refrigerant gases. In such areas, stationary leak detectors incorporating alarms may be required, **Figure 2-12**.

A ***stationary refrigerant detector*** is a refrigerant detector in a fixed location that will note an increase of refrigerant vapors or gases in advance of dangerous levels. Some systems include a ventilation fan, flashing

Copyright Goodheart-Willcox Co., Inc.

OSHA

Figure 2-10. This sign indicates that the substance contained within is an oxidizer. These are not combustible, but they do promote combustion. Oxygen is a common oxidizer and is used to increase the heat and intensity of an acetylene flame.

ASHRAE Standard 34 Classification Standards	
Toxicity	
Class A	No evidence of toxicity below 400 ppm (lower toxicity)
Class B	Evidence of toxicity below 400 ppm (higher toxicity)
Flammability	
Class 1	Refrigerant that will not propagate a flame under normal conditions in open air
Class 2	Refrigerant may propagate a flame under certain conditions in open air
Class 3	Highly flammable

Goodheart-Willcox Publisher

Figure 2-11. Refrigerant toxicity and flammability classifications.

lights as visual alarms, and an audible alarm. If the programmed parts per million (PPM) of refrigerant is reached, the alarm will sound, and the lights will flash. When an alarm sounds, take all precautions necessary, including use of special breathing apparatus. Turn on ventilation if it is not already operating.

2.2.6 Chemical Hazards

During the course of work, a technician will use various chemicals. These can be used to clean equipment, for water treatment, or for a variety of other purposes. Most chemicals used will be fairly mild; however, those used for water treatment can be harsh and require specific precautions. These products can involve specific risks and especially the risk of chemical burn following eye or skin exposure. Be alert to the location of eye and body wash facilities, **Figure 2-13**.

Ritchie Engineering Co., Inc. – YELLOW JACKET Products Division

Figure 2-12. A stationary refrigerant detection system can have multiple remote monitors to cover a large area.

Safety Note

SDS and First Aid

It is the technician's responsibility to be knowledgeable of the SDS (safety data sheet) for chemicals being used. Be alert to first aid treatment prior to use. In the case of exposure, follow manufacturer directions and seek medical assistance.

Uline

Figure 2-13. Whenever arriving at a facility, be sure to locate at least one eyewash station.

Copyright Goodheart-Willcox Co., Inc.

Various other chemical hazards exist. Never use carbon tetrachloride as a cleaning agent, as it is extremely toxic when inhaled and on the skin. Oil and refrigerant are contaminated during a motor burnout and contain acid. These products are dangerous to the skin, eyes, and lungs. When handling such a situation, use appropriate PPE and be mindful of warning signs, **Figure 2-14**.

Globally Harmonized System (GHS)

The ***Globally Harmonized System (GHS)*** is a standardized system for labeling chemicals. The GHS is the basis of OSHA's hazard communication requirements.

The standardized label elements included in the GHS are symbols, signal words, and hazard statements. Symbols, called ***hazard pictograms***, convey health, physical, and environmental hazard information, assigned to a GHS hazard class and category, **Figure 2-15**.

Signal words, such as "Danger" or "Warning," are used to indicate the relative level of severity of the hazard. ***Hazard statements*** are standard phrases assigned to a hazard class and category that describe the nature of the hazard.

OSHA

Figure 2-14. This sign indicates that a substance can cause chemical burns or corrosion to skin, can damage eyes, and can corrode metal.

OSHA

Figure 2-15. One example of a hazard pictogram is this sign, which indicates that a substance is harmful to humans. It may be carcinogenic, mutagenic, toxic to reproductive organs, toxic to breathe, or can cause targeted organ toxicity or respiratory hypersensitivity.

Hazard Communication Standard and Safety Data Sheets

The ***Hazard Communication Standard (HCS)*** is an OSHA standard that requires chemical manufacturers, distributors, or importers to provide ***safety data sheets (SDS)*** to communicate the hazards of hazardous chemical products. SDSs were formerly known as material safety data sheets (MSDS). An SDS is created in a uniform format that includes section numbers, headings, and the following associated information:

- Section 1, Identification. This includes product identifier; manufacturer or distributor name, address, phone number; emergency phone number; recommended use; restrictions on use.
- Section 2, Hazard(s) Identification. This includes all hazards regarding the chemical; required label elements.
- Section 3, Composition/Information on Ingredients. This includes information on chemical ingredients; trade secret claims.
- Section 4, First Aid Measures. This includes important symptoms, effects, and required treatment.
- Section 5, Fire-Fighting Measures. This lists suitable extinguishing techniques, equipment; chemical hazards from fire.
- Section 6, Accidental Release Measures. This lists emergency procedures, protective equipment, and proper methods of containment and cleanup.
- Section 7, Handling and Storage. This lists precautions for safe handling and storage, including incompatibilities.
- Section 8, Exposure Controls and Personal Protection. This lists OSHA's permissible exposure limits (PELs), threshold limit values (TLVs), appropriate engineering controls, and personal protective equipment (PPE).
- Section 9, Physical and Chemical Properties. This lists chemical's characteristics.
- Section 10, Stability and Reactivity. This lists chemical stability and possibility of hazardous reactions.
- Section 11, Toxicological Information. This includes routes of exposure, related symptoms, acute and chronic effects, and numerical measures of toxicity.
- Section 12, Ecological Information.
- Section 13, Disposal Considerations.
- Section 14, Transport Information.

Copyright Goodheart-Willcox Co., Inc.

- Section 15, Regulatory Information.
- Section 16, Other Information. This includes the date of preparation or last revision.

Safety Note

SDS Accessibility

Employers must ensure that SDSs are readily accessible to employees. If you cannot locate an SDS, inform company management immediately.

2.2.7 Breathing Hazards

Work sites often contain a variety of harmful substances such as dust, asbestos, adhesives, and solvents. When using resins or adhesives, be certain to work in a continuously ventilated area. Dust can be harmful to a technician's respiratory system. In some instances, a respirator that has the ability to filter out dust must be worn.

In the past, asbestos was used as insulation in homes, around piping, and in furnace rooms. We are now aware that asbestos is extremely dangerous to humans. Asbestos fibers, when inhaled, are extremely carcinogenic (cancer causing). When cutting or removing asbestos, a ventilation system with a high-efficiency particulate air (HEPA) filter must be used.

Other breathing hazards can arise from the various chemicals and substances used in HVACR work. Refrigerant vapors that have been exposed to heat or flame are toxic. A technician will note a strong odor. Vacate and ventilate such an area.

Safety Note

Ventilation When Using a Torch

When brazing in enclosed spaces, ventilation is critical. A technician's head should remain below rising fumes. Use a fan to circulate air and provide fresh air for breathing and for brazing.

2.3 Personal Protective Equipment (PPE)

In any workplace, various hazards will be encountered. Potential hazards can be either health hazards or physical hazards. Examples of health hazards include overexposure to harmful chemicals, dust, or radiation. Examples of physical hazards are high heat, electrical connections, or sharp edges. Controlling a hazard and eliminating it is most preferable; however, some hazards cannot be removed entirely or controlled realistically.

Personal protective equipment (PPE) is worn by a technician to minimize exposure to health and physical hazards. Examples of PPE include gloves, hard hats, goggles, and respirators. Use of PPE alone will not prevent or protect from hazards. A technician must use a variety of strategies to protect and maintain safety.

2.3.1 Head Protection

A head injury can cause permanent impairment or disability for life. A blow to the head can even cause death. Hard hats protect a technician from impact, penetration, electrical shock, and burn hazards to the head. They must always be worn at a construction site. Hard hats must be worn with the bill facing forward, **Figure 2-16**.

Headgear comes in a variety of sizes with most items being adjustable for proper fit. Hard hats have a protective hard outer shell and a shock absorbing lining. Straps ensure the hat stays in place.

2.3.2 Hearing Protection

Determining the need for hearing protection requires consideration of the following:

- The loudness of the noise in decibels (dB).
- The length of time of exposure to the noise.
- If the employee moves between different areas.
- If the noise is produced from a single source or multiple sources.

OSHA's guidelines for permissible noise exposure are shown in **Figure 2-17**. OSHA requires that hearing protection must be worn at noise levels of 90 dB or greater for 8 hours per day. A location where one must raise their voice to be heard is likely an environment where hearing protection is warranted. Hearing protectors must be worn consistently throughout a noisy work environment. If removed for even a short period, the protection is considerably reduced.

Uline

Figure 2-16. Always wear a hard hat on a construction work site.

Copyright Goodheart-Willcox Co., Inc.

Maximum Permissible Noise Exposure	
Duration of Exposure (Hours per Day)	Sound Level (dBA)
8	90
6	92
4	95
3	97
2	100
1 1/2	102
1	105
1/2	110
1/4 or less	115

Adapted from OSHA

Figure 2-17. Table of permissible noise exposure levels.

There are three types of hearing protection:

- Single-use earplugs are made of foam, silicone rubber, or a similar material. They are self forming when inserted.
- Preformed earplugs fitted by a professional. These can be either disposable or reusable. If reusable, clean after each use.
- Earmuffs must seal perfectly and completely around each ear. Glasses, facial hair, or movements, such as chewing, may reduce seal and effectiveness, **Figure 2-18**.

A

B

Uline

Figure 2-18. Hearing protection equipment. A—A pair of earplugs. B—Earmuffs connected to a hard hat.

2.3.3 Eye Protection

The majority of injuries on the job are the result of objects falling or flying, such as sparks flying into the eye. In HVACR activities, a technician is exposed not only to these concerns but also exposure to chemicals, acid, and light radiation. At the least, a technician should always wear protective safety glasses or goggles with side shields, **Figure 2-19**.

Uline

Figure 2-19. Wraparound safety glasses.

Full goggles should be worn when performing work in a dusty area or when using a powder-actuated tool (such as a nail gun). If exposed to a potential for more severe impact or when working with chemicals or caustic cleaners, a full-face shield should be worn, **Figure 2-20**.

When brazing, a full-face shield is recommended, but a shaded lens is also necessary according to the intensity of the flame being used. This is necessary to protect eyes from cornea damage, due to the brightness of the flame.

2.3.4 Respiratory Protection

Often, a respiratory hazard can be removed or alleviated with increased ventilation. However, when that is not possible, respirators must be used. There are two types of respirators: air-purifying or supplied-air. Air-purifying respirators include a basic mask, half-face mask, and full-face mask with cartridge, **Figure 2-21**.

Any mask must seal securely around the face to avoid allowing any access for dust or particles. Half-face and full-face masks provide the most secure sealing around the face. Cartridges can be changed to protect against certain chemicals and substances.

Air-purifying respirators are passive respirators that remove dust and certain chemicals from the air. When there is dust in the air from cutting, sanding, and working with insulation, it may be necessary to wet the area down to encourage the dust to settle.

Copyright Goodheart-Willcox Co., Inc.

Uline

Figure 2-20. Safety goggles and a face shield provide the proper eye protection for different job activities.

When there is a limited amount of oxygen in the air (less than 19.5%), when contaminants cannot be filtered, or when filtering would overload an air-purifying respirator, a supplied-air respirator must be used. ***Supplied-air respirators*** provide supplemental oxygen.

Care of respirators is important. They should be taken apart, cleaned with a mild cleaning solution, and dried. Any component that shows wear should be replaced. Note that respirator parts for different brands are not interchangeable. Respiratory protection devices require periodic performance flow testing. Respirators should be stored to protect against dust, sunlight, moisture, and extreme temperatures.

2.3.5 Protective Clothing

An HVACR technician's hands are exposed to temperature extremes, abrasions, cuts, and chemicals. Wearing the correct gloves minimizes such risks. Protective gloves must be inspected prior to each use. **Figure 2-22** shows a variety of work gloves.

Types of gloves that are commonly used include the following:

- Leather gloves—suitable for avoiding cuts, abrasions, and for use during cutting, welding, soldering, or when there is a danger of touching hot surfaces.
- Aluminized gloves—offer reflective and insulating protection against heat. Require insert made of synthetic material to protect against heat and cold.
- Aramid fiber gloves—protect against heat and cold. These are cut- and abrasive-resistant.
- Synthetic gloves—Protect against heat and cold. These are cut- and abrasive-resistant. May withstand some diluted acids but not alkalis and solvents.

Uline

Figure 2-21. A basic lightweight mask and a half-face respirator with space for two cartridge filters.

Copyright Goodheart-Willcox Co., Inc.

Uline

Figure 2-22. A variety of work gloves for different uses.

- Fabric gloves—protect against dirt, slivers, abrasion. Not appropriate for use with rough, sharp, or heavy materials.
- Coated fabric gloves—made from cotton flannel with napping on one side, plastic coating on the other. Good for general purpose such as handling bricks or wire.
- Chemical and liquid resistant gloves—made with rubber or plastic. The thicker the glove material, the greater the chemical resistance. Note thick gloves may limit grip and dexterity. Be certain to check that the gloves being worn are resistant to the chemicals being used.

Wear abrasion-resistant gloves when handling sheet metal or sharp objects. When handling refrigerants, the technician is exposed to two risk factors. The first is the low temperature that the refrigerant presents. The second is the danger of an acidic oil spray. Therefore, it is recommended that gloves used offer both thermal and chemical protection. Gloves that protect against electrical shock should be chosen based on the voltage of the electrical source.

Work shoes or boots should be well fitted, providing support and stability. The footwear should be made of heavy leather and be nonconductive (to prevent electrical shock). Heat-resistant soles will protect feet against hot work surfaces. Metal insoles protect against punctures. A steel-toe or composite-toe shoe protects the top of the foot and toes.

2.4 Safe Work Practices

During the course of a workday, a technician will be required to move around in a variety of ways, carrying items of different size, shape, and weight. Much of the work will include the use of various hand and power tools. A technician must bear in mind the best way to conduct each task to ensure personal safety and prevent injuries to self and others around.

Copyright Goodheart-Willcox Co., Inc.

2.4.1 Lifting

When lifting heavy or large objects, use tools that can assist the process. Use of a hand truck, portable dolly, or pry bar may simplify movement. When lifting items, consider wearing a brace for proper back support, **Figure 2-23**.

Do not attempt to lift heavy equipment independently. Ask others for assistance. When lifting heavy objects, use your legs, not your back. Keep your back straight during lifting.

2.4.2 Ladder Safety

Ladders used in HVACR work should be nonconductive, such as those made of fiberglass. Inspect ladders frequently for defects or deterioration. Be certain there is no oil or grease or other potential slipping hazard on the rungs. Portable ladders must have nonslip feet. The more steady the base and feet, the less likely the ladder is to tilt or sway.

Safety Note

Ladder Safety

Never use a damaged or broken ladder. Never place a ladder on top of scaffolding.

The following are some general guidelines for ladder safety:

- Place a ladder on a stable and level surface.
- Position the bottom of an extension ladder no further away from the wall than one quarter of the supported height.
- If the ladder is being used to access an upper area, such as a roof, the ladder must extend a minimum of 3′ above the step off surface.
- Tie, block, or secure the upper part of the ladder where it meets the building. This will prevent the ladder from moving sideways.
- Follow the maximum carrying capacity of the ladder. Take into account both the weight of the technician and the materials.
- The "three points of contact" rule should be used, as it minimizes chances of slipping or falling. Climb facing the ladder with two hands and one foot, or two feet and one hand in contact with the ladder rungs. Use towlines or a tool belt to carry materials, **Figure 2-24**.

Uline

Figure 2-23. A back brace can provide back support when much lifting must be done.

JugLugger

Figure 2-24. This technician is using a shoulder strap to carry a cylinder of refrigerant to a rooftop.

Copyright Goodheart-Willcox Co., Inc.

- Stay centered while on the ladder. Keep both hips in line with or between the rails of the ladder. This keeps your weight centered with the ladder. Do not overreach or lean.

Safety Note

Ladders and Electrical Hazards

When setting up stepladders or extension ladders, be aware of power lines. Do not place a ladder too near or against a live electrical hazard. If possible, use a ladder made of nonconductive material, such as fiberglass.

2.4.3 Scaffolding Safety

Often, installation or repair of ductwork requires the use of scaffolding. See OSHA regulations regarding scaffolding and its usage:

- Scaffolds must have toeboard, midrail, and top rail.
- Platforms must be at least 18″ wide.
- Scaffolds must have ladders for proper access. A fall protection device or safety cage is necessary for scaffolding over 16′ high.
- Scaffold wheels must be in locked position when the scaffold is in use.

Safety Note

Scaffolding and Electricity

Before climbing scaffolding, ensure that proper clearance from power lines can be maintained.

2.4.4 Fall Protection Training

Fall protection is required if a technician is working at heights higher than a 6′ drop. Any time a technician is working around moving machinery, fall protection must be used. Fixed fall protection would include wall or guardrails of at least 42″ in height. If fixed fall prevention is not available, personal fall protection must be used. PPE for falls consists of a properly fitted body harness connected to a properly anchored fall arresting system, **Figure 2-25**.

The combination of the safety harness with the anchored lanyard is intended to limit the fall to a distance minimizing impact. Chest and leg straps should fit snugly. The D-ring or connective device should be positioned between the shoulder blades. A technician should receive proper training regarding fall protection prior to initial use of equipment. Always check fall-protection devices prior to use for signs of wear.

2.4.5 Confined Spaces

A ***confined space*** consists of an area that is closed off from a larger space and is large enough for a person to enter and perform work. Working in a confined space restricts movement. In addition, working in a confined space means limited airflow, increasing the risk for explosion, asphyxiation, or poisoning.

Prior to entering a confined space, check to ensure adequate oxygen exists and that no hazardous vapors are present. Welding, brazing, or soldering in a confined space is extremely dangerous and may cause an explosion. If you do enter a confined space, have someone standing outside the space with an emergency breathing apparatus ready and available. Constant communication with this person is necessary. Have adequate lighting and be aware of safe entry and exit points. It may be beneficial to use a safety harness and rope in case quick removal is necessary.

Safety Note

CO in Confined Space

Carbon monoxide (CO) may build up in a confined space. It is odorless and tasteless and will cause poisoning.

Uline

Figure 2-25. Fall-protection safety harness.

Copyright Goodheart-Willcox Co., Inc.

2.4.6 Hand and Power Tools

Always read the manufacturer's instructions prior to using a tool. Often, there will be recommendations regarding proper care and maintenance. It is important to use the appropriate tool for a task. The greatest hazard with a hand tool is when it is used for a purpose other than that for which it was intended. Check tools for wear and tear and replace or repair as necessary. Make certain tools are secure when working on ladders or scaffolding. Always use a sharp tool by pushing it away from you, not toward you. When working with hand tools, always wear goggles and use gloves if necessary.

When using power tools, always use a GFCI to help protect from shock. Prior to plugging in the tool, be certain to check the power switch and ensure it is in the off position. When using power tools, use the appropriate PPE. Clean, lubricate, and maintain power tools as per manufacturer's instructions. Disconnect a power tool prior to performing maintenance or when not in use. Tool guards on equipment should never be tampered with, as they are there to protect the user. Any extension cords must be sized appropriately for the tool. They should be of the outdoor type, rated for 600 V, and include an insulated grounding conductor.

Safety Note

Grounding Prong Missing

Never operate an electric tool with the ground prong missing. If such a tool malfunctions, you could become the grounding conductor.

2.4.7 First Aid Procedures

As mentioned earlier in this chapter, it is recommended that all HVACR technicians enroll in an approved first aid course. Often schools or colleges offer first aid as an elective. Knowing how to quickly and correctly address injuries can save lives.

In an event that first aid is required, promptly begin first aid as per your training and request someone call emergency services. A person performing first aid should remain calm, assess the situation, and direct others as necessary. Realize that the first minutes following an accident are the most critical. Always follow your employer's documentation processes following an accident. Know where a first aid kit is available at all times and know how to use its contents, **Figure 2-26**.

2.4.8 Safety Certifications

Employers may request or require that their technicians participate in an OSHA 10-hour certification program. The goal of the program is to train workers on how to recognize, avoid, and prevent safety and health hazards in the workplace.

Through this program, workers can attend a 10-hour class delivered by OSHA-authorized trainers. The 10-hour class is intended for entry-level workers. A 30-hour class is designed for workers with some safety responsibility. Through these trainings, OSHA assists in ensuring that workers are more knowledgeable about workplace hazards and their rights.

Uline

Figure 2-26. Learn how to use the contents of a first aid kit.

Copyright Goodheart-Willcox Co., Inc.

Chapter Review

Summary

- OSHA is the national code that covers workplace safety.
- A hazard is a potential for harm.
- Lockout/tagout (LOTO) practices eliminate or reduce electrical hazards.
- Properly store and use solvents and fuels to minimize fire hazards.
- When working in hot conditions, be aware of the signs of heat-related illness. Wear appropriate clothing and PPE and stay hydrated. In the cold, wear layered clothing to retain heat and waterproof boots to keep dry. Know the signs of hypothermia and frostbite.
- Read a product's SDS and manufacturer literature before use.
- Breathing hazards include dust, asbestos, adhesives, solvents, refrigerant, and other chemicals. Use appropriate ventilation for a given task in a given location.
- Personal protective equipment (PPE) minimizes health and physical hazards.
- Use nonconductive ladders and scaffolding in the proper manner. Setup of step and extension ladders is critical to preventing falls.
- Read a tool's manufacturer directions and only use hand and power tools for their intended use. Wear appropriate PPE for a given tool's use.

Review Questions

Write your answers on a separate sheet of paper. Do not write in this book.

1. The national code that covers workplace safety is _____.
   A. AHRI
   B. ASHRAE
   C. EPA
   D. OSHA
2. A good method of preventing electrical hazards is to _____.
   A. use a hard hat
   B. use a lockout/tagout (LOTO) practice
   C. ventilate the area well
   D. wear a respirator
3. For proper fire extinguisher use, remember the initials _____.
   A. I.W.I.N.
   B. L.O.T.O.
   C. P.A.S.S.
   D. Y.O.L.O.
4. Before dealing with an electrical fire, make sure that the fire extinguisher is rated Class _____.
   A. A
   B. B
   C. C
   D. D
5. An elevated body temperature, headache, nausea, weakness, dizziness, fainting, and confusion are signs of _____.
   A. electrical shock
   B. frostbite
   C. heat-related illness
   D. hypothermia
6. A sudden uncontrolled release of refrigerant could cause the following, *except* _____.
   A. blindness
   B. electrical burns
   C. frostbite
   D. skin damage
7. When storing or transporting refrigerant cylinders, they should be kept _____.
   A. at a 45° angle against something sturdy
   B. horizontal with the valve at either side
   C. vertical with the valve at the bottom
   D. vertical with the valve at the top
8. Since nitrogen cylinders can be charged to such high internal pressure, a _____ is necessary when using the nitrogen.
   A. first aid kit
   B. hazard pictogram
   C. pressure regulator
   D. set of earmuffs
9. Because many refrigerant vapors are heavier than air, a confined space must have _____.
   A. a GFCI outlet
   B. good ventilation
   C. LOTO supplies
   D. a pressure regulator
10. When cutting or removing asbestos, run a ventilation system with a(n) _____ filter.
    A. GFCI
    B. HEPA
    C. PPE
    D. SDS

Copyright Goodheart-Willcox Co., Inc.

11. If an environment requires workers to raise their voices to be heard, _____ protection is likely warranted.
    A. eye
    B. fall
    C. head
    D. hearing
12. When working in a very dusty environment, _____ should be used for eye protection.
    A. face shield
    B. safety goggles
    C. standard safety glasses
    D. sunglasses
13. When working where there is a limited amount of oxygen in the air (less than 19.5%), use a(n) _____ as respiratory protection.
    A. basic mask air-purifying respirator
    B. cartridge filter air-purifying respirator
    C. supplied-air respirator
    D. tightly tied bandana or neckerchief
14. When handling toxic or corrosive liquid chemicals, wear _____ gloves.
    A. aramid fiber
    B. fabric
    C. leather
    D. rubber or plastic
15. A ladder being used to access an upper area should extend at least _____ above the step off surface.
    A. 3″
    B. 15″
    C. 2′
    D. 3′

Copyright Goodheart-Willcox Co., Inc.

CHAPTER 3 Service Calls

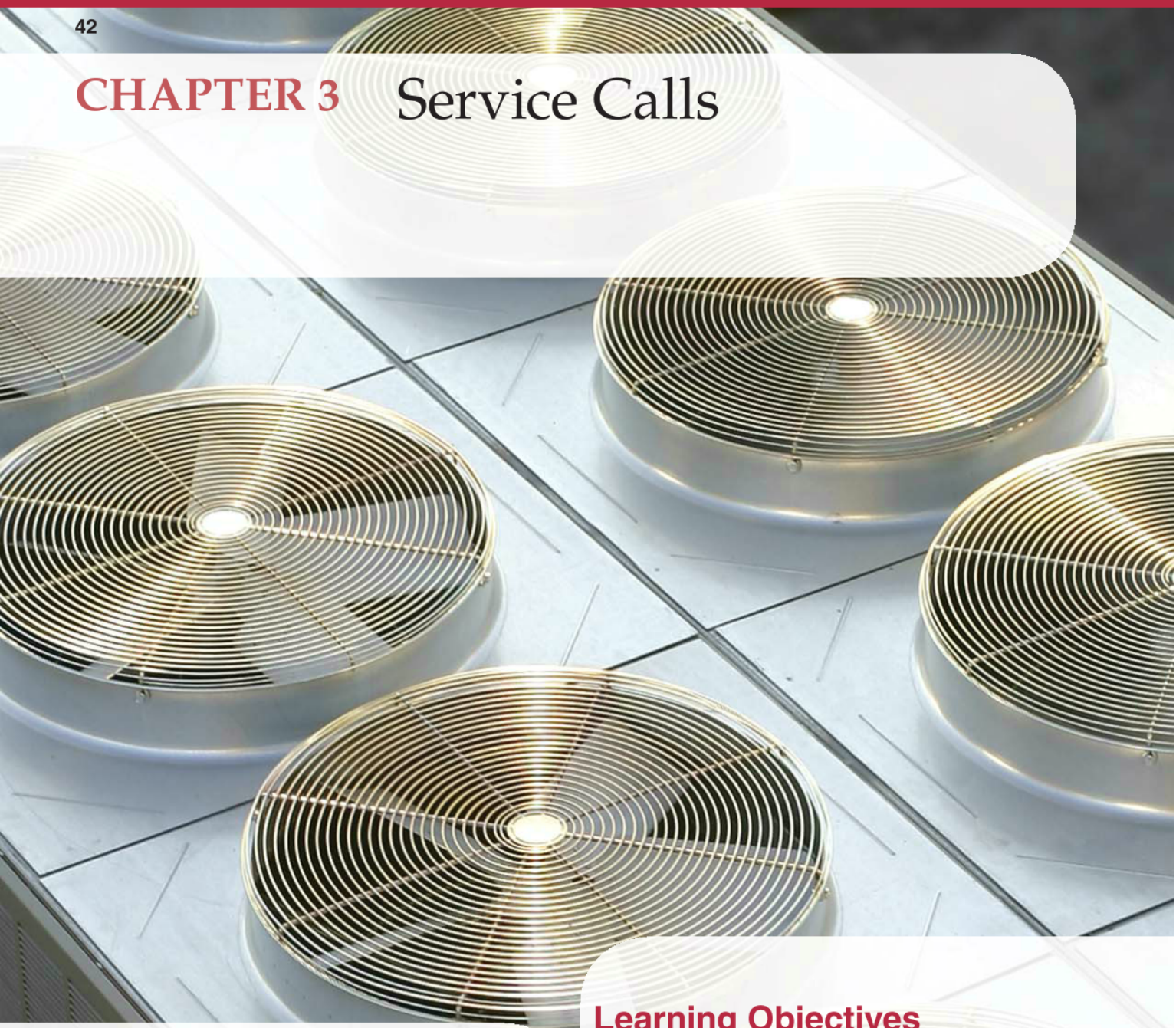

Chapter Outline

3.1 Servicing
3.2 Troubleshooting
- 3.2.1 Troubleshooting Charts and Procedures
- 3.2.2 Using Nonstandard Charts

3.3 Customer Service
- 3.3.1 Technician Appearance and Conduct
- 3.3.2 Arriving on the Job
- 3.3.3 Service Estimates
- 3.3.4 Service Contracts
- 3.3.5 Contractual Agreements

Learning Objectives

Information in this chapter will enable you to:

- Describe three general categories of HVACR service.
- Explain the steps in a standard troubleshooting procedure.
- Evaluate a problem in a logical and systematic sequence.
- Select a remedy for a problem using a three-step procedure.
- Explain how a technician's appearance and conduct affects customer relations.
- Understand the basics for writing service estimates and service contracts.

Technical Terms

callback
contractual agreement
customer relations
maintenance
maintenance service contract
repair
servicing
trouble code
troubleshooting

Introduction

The key to a successful business is repeat customers, and the key to repeat customers is customer satisfaction. Technicians need to go above and beyond just properly installing and servicing HVACR systems. They also need to be honest, friendly, and prompt in dealing with customers.

A knowledgeable and well-trained technician should be able to explain what is wrong with a malfunctioning system and offer possible solutions, including the benefits and disadvantages of each option. Providing customers with enough information and advice to choose the repair solution develops trust and a sense of ease.

A neat and orderly appearance is often seen as a reflection of neat and orderly repair work. Customers not only want a technician's work to be professional, they also want their technician to look and sound professional.

Video

- Professionalism

3.1 Servicing

In the HVACR industry, ***servicing*** generally refers to work performed on installed equipment or systems. This definition can also be extended to include installation of a new system in an existing building. Installation of a new system in a new structure would normally be described as *installing* rather than as *servicing*. See **Figure 3-1**.

Most servicing occurs in one of three categories:

- Repair.
- Maintenance.
- Upgrades/system additions.

Repair is service required to fix a system that is not operating correctly. Typically, the homeowner or business owner identifies a problem and contacts an HVACR service company. Often, the problem is that the system is no longer delivering sufficient cooling or heating. Other common problems include leaks and unusual noises.

Maintenance is service performed regularly to reduce the likelihood of a future breakdown and to minimize any reduction of system performance. For example, maintenance for residential air-conditioning systems is often performed annually and may include cleaning the condenser coils and checking the evaporator drain. Maintenance of commercial systems often includes filter changes and equipment lubrication.

The final general category of service—upgrades and system additions—involves work that improves the capabilities of an existing system. For example, a homeowner may want to replace an older programmable thermostat with an Internet-enabled thermostat that can be monitored and adjusted with a smartphone app.

3.2 Troubleshooting

Troubleshooting is a critical part of repair work. ***Troubleshooting*** is the systematic analysis of a problem. This analysis is generally guided by a chart provided by the manufacturer of the equipment.

Each system has its own unique features, and consequently, its own problems. This chapter will cover common troubleshooting areas and give the recommended procedure to follow when servicing different types of equipment.

Thinking Green

Proper Service Is Also Green Service

Service technicians that follow proper service procedures are already being green. Proper service procedures are designed to maximize system effectiveness while minimizing energy consumption, refrigerant loss, and other waste. By following proper service procedures, a service technician can make the system perform better, save the customer money, and reduce the environmental impact of the system.

3.2.1 Troubleshooting Charts and Procedures

One of the key requirements for a service technician is the ability to follow a standard procedure, which is a sequence of actions, or steps, designed to

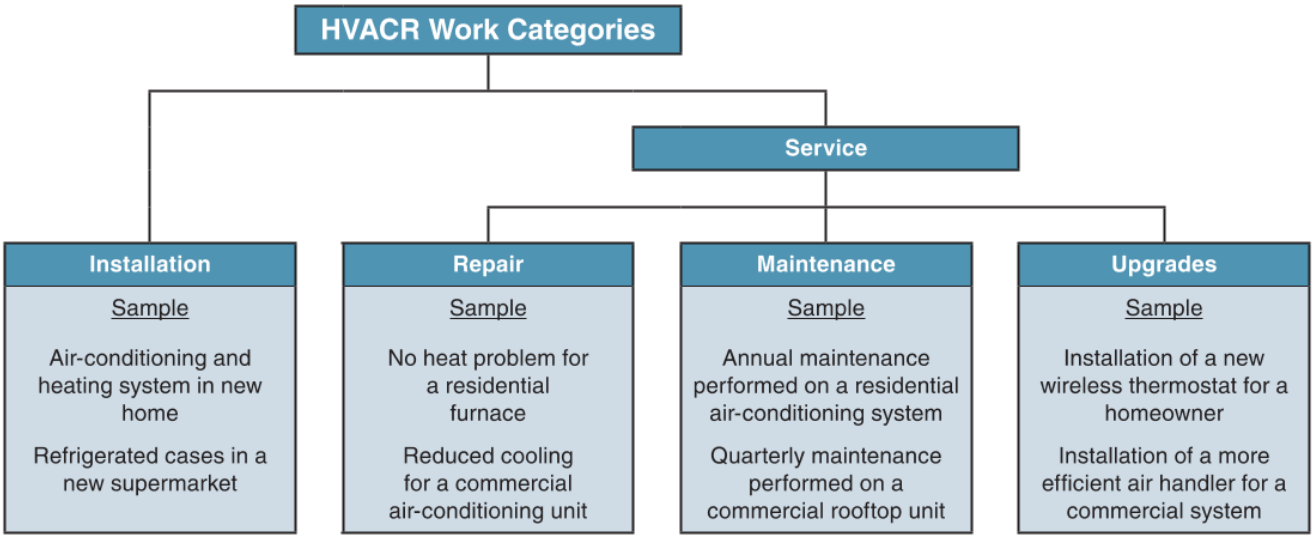

Goodheart-Willcox Publisher

Figure 3-1. This diagram illustrates the broad categories of work performed by an HVACR technician.

Copyright Goodheart-Willcox Co., Inc.

identify and correct a specific problem in the system. Using standard procedures saves time, money, and frustration. By following the same sequence of activities, you will become more efficient through repeated use of your skills. An example of a standard troubleshooting procedure is as follows:

1. Obtain a description of the problem and a list of recent repairs from the owner.
2. Determine the possible cause from the problem's description.
3. Verify the suspected cause using pinpoint tests. If the suspected cause is not the actual cause, determine another possible cause, keeping in mind all information gathered. Repeat Step 3 until the true cause of the problem is determined.
4. Identify a specific remedy for the problem.

Whenever possible, obtain a service manual or troubleshooting chart. The manual or chart should be written by the manufacturer of the equipment being serviced. It may be available from the building owner, your employer's resources, or the manufacturer's website. There are many different types of manuals in use. However, they all perform the same function, which is helping the technician diagnose and service a malfunctioning system.

Most charts have three basic columns:

- *Problem*.
- *Possible Cause*.
- *Remedy*.

Follow a troubleshooting chart in an orderly, step-by-step fashion. On arrival at the customer's site, you should become familiar with the system in question. Visually inspect the system. Examine all components and wiring for any evidence of malfunction. If such evidence is found, review the system's electrical wiring and component diagram. The component diagram reveals how bad components affect the system problem.

Never attempt to make a quick decision that may only temporarily fix the problem. Since it may not uncover the root or cause of the problem, such a decision will often result in a ***callback*** for the same reason as the original service call. An example of this would be a complaint of "inadequate cooling." After determining that a system is low on refrigerant, a technician could simply add refrigerant. However, without locating the leak that caused the problem, this would only provide a temporary solution and an incorrect remedy. There would likely be a callback to the same location for the same problem. Callbacks must be avoided because they can shake the customer's confidence in the company.

Thinking Green

Avoid "Temporary Fixes"

In addition to costing the customer more money in the long run, an improper or "temporary" fix also has a greater impact on the environment. When considering the environmental impact of an avoidable callback, consider any refrigerant lost because of the inadequate repair, the extra energy consumed because the system is not functioning at maximum efficiency, any material waste, and the opportunity cost. Time spent performing an improper repair and the resulting callback is time not spent fixing another system.

Many residential and commercial units include a controller that monitors system operation. Temperature and pressure sensors provide feedback to the controller as to the condition of the unit. When a problem occurs, the controller signals a failure. Some units use a light emitting diode (LED) code with letters or numbers or a light or series of lights, as shown in **Figure 3-2**.

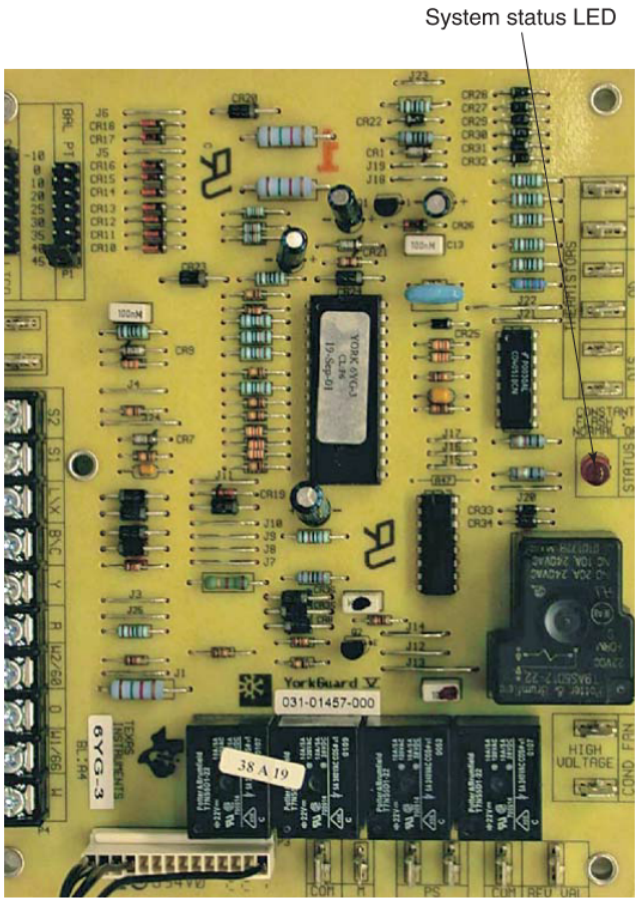

York International Corp.

Figure 3-2. Note the LED used on this controller circuit board to indicate a heat pump's operating status.

Copyright Goodheart-Willcox Co., Inc.

A ***trouble code*** is a form of visual communication that correlates with a manufacturer's explanation of where or what a unit's problem may be. The codes and their meanings will vary from manufacturer to manufacturer and product to product. **Figure 3-3** shows a manufacturer's troubleshooting code for a status light.

Owner's Description of Problem

The first column of a troubleshooting chart normally lists problems. This column may be titled *Problem*, *Trouble*, *Complaint*, or similar. This column corresponds to the complaint given by the owner. Usually the complaint is described in general terms.

Status Light Trouble Codes	
LED Light Status	**Trouble**
One (1) flash	Heartbeat (normal operation)
Two (2) flashes	High pressure switch opens for at least 6 seconds
Three (3) flashes	Discharge temperature is over 263°F
Four (4) flashes	Discharge temp is under 90°F after one hour of compressor run time
Five (5) flashes	Defrost failure
Six (6) flashes	Discharge sensor short
Seven (7) flashes	Outdoor sensor short or open
Nine (9) flashes	Bonnet sensor failure

York International Corp.

Figure 3-3. This chart shows the corresponding LED light status and trouble codes for a heat pump.

An experienced technician begins troubleshooting by carefully listening to the owner's complaint. The owner often is not familiar with the principles of operation of a system. Frequently, he or she will use terms that are not the same as those used in the field. Therefore, a technician must listen carefully.

When analyzing a problem presented by the owner, obtain as much information as possible. This includes how the system is operating now and how it operated before any malfunction. After consulting with the owner, ask other occupants for any additional information about system performance.

Checking Possible Cause

The next step is to check the *Possible Cause* column of a troubleshooting chart. This column may also be titled *Probable Cause*, *Have You Checked*, or similar. This listing analyzes the problem in terms of the major components of the system. A system malfunction may have multiple components listed as possible causes, which means it is important to test each component to identify which one is the specific cause of the problem.

Figure 3-4 lists possible causes of a problem in a self-contained commercial food storage unit. As shown, the owner indicated that the problem is excessively long or continuous unit operation. Possible causes could be a low refrigerant charge, control contacts stuck or frozen closed, or any of the other items identified.

The possible causes should be investigated thoroughly. After identifying the general part of the system that is the possible cause of the problem, the technician should perform tests and inspections to determine the actual cause.

Troubleshooting Chart		
Problem	**Possible Cause**	**Remedy**
Unit operates for excessively long period or continuously.	1. Shortage of refrigerant.	1. Fix leak, add charge.
	2. Control contacts stuck or frozen closed.	2. Clean contacts or replace control.
	3. Refrigerated space has excessive load or poor insulation.	3. Determine fault and correct.
	4. System inadequate to handle load.	4. Replace with larger system.
	5. Evaporator coil iced.	5. Defrost.
	6. Restriction in refrigeration system.	6. Determine location and remove.
	7. Dirty condenser.	7. Clean condenser.
	8. Filter dirty.	8. Clean or replace.
	9. Low airflow.	9. Replace filter. Clean evaporator coil. Check motor speed.

Goodheart-Willcox Publisher

Figure 3-4. Troubleshooting charts are used by a technician to help identify possible causes and remedies for a customer's complaint or problem.

Copyright Goodheart-Willcox Co., Inc.

Suggested Remedy

The final column in a troubleshooting chart may be labeled *Remedy*, *Repair*, *Solution*, *You May Need To*, or some similar term. This is the third step when using a troubleshooting chart. You will perform the appropriate task from this third column.

There are many steps to follow in repairing refrigeration equipment. Each part is checked in a step-by-step manner. Actual procedures will vary. They will depend on the specific remedy selected, the type of part or device being checked, and the specific system. The sequence of procedures for checking and repairing or replacing a part will vary. Procedures for an electrical device will be different from that of a mechanical device.

Safety Note

Proper Procedures

Always follow basic safety guidelines as you work through a service procedure. Proper tools, gauges, electrical meters, personal protective equipment (PPE), and other necessary supplies must be used.

3.2.2 Using Nonstandard Charts

Troubleshooting charts vary, depending on the purpose of the equipment and the particular manufacturer. Be very careful to select the right troubleshooting chart from the equipment manufacturer. Write down the exact model number of the system being serviced and locate a chart based on that model number. Any components that have been added to the system must also be taken into consideration. General troubleshooting charts for hermetic refrigeration systems, domestic and light commercial refrigeration systems, and industrial refrigeration systems are included in the *Appendix*.

Some troubleshooting charts include additional information or use a different format from the standard three-column chart. **Figure 3-5** shows the servicing and heating analysis guide for a gas-fired, forced-air furnace. Although this chart uses a format different from the standard three-column chart, the three-step concept can still be used.

To use a nonstandard troubleshooting chart, begin by identifying where the possible problems are located on the chart. Using the servicing and heating analysis guide in **Figure 3-5** as an example, the possible problems are listed under the heading *Complaint*, which is divided into two categories, *No Heat* and *Unsatisfactory Heat*.

After identifying which complaint listed in the chart most closely matches the owner's description of the problem, identify the possible causes of the problem. In the heating analysis guide example, the chart uses a sequence of check marks that correspond to the possible causes, which are listed to the left of the check marks.

The third step is to identify possible solutions, which is done by looking to the right of the check marks. If the problem is believed to be caused by improper airflow or distribution, the chart directs you to check the static pressure of the ducts and indicates that you should see "Service Procedure S-17." A technician would then perform the service procedure as indicated. See **Figure 3-6**.

3.3 Customer Service

The role of the HVACR technician extends beyond troubleshooting and repair skills. The service technician is not only required to be knowledgeable in refrigeration and air conditioning, but must also meet the customer's needs and understand business operations.

One of the keys to a successful business operation is good customer relations. The term ***customer relations*** refers to the way a business interacts with customers. As you interact with a customer, he or she will judge

Service Call Scenario

Examples of Service Calls and Troubleshooting

In later chapters of this textbook, *Service Call Scenario* features provide examples of an HVACR technician visiting a customer and addressing a repair issue. Each one of the *Service Call Scenario* features follows the basic troubleshooting model and includes the following sections:

Customer Complaint: The customer's description of the problem.

Possible Causes: A list of potential causes of the problem.

Description of Problem: A more detailed description based on the technician's evaluation of the system.

Testing: Testing performed to determine which of the potential causes is creating the problem.

Solution: The corrective action taken once the cause of the problem has been identified.

Safety: A reminder of specific safety issues related to the testing performed and the solution implemented.

Copyright Goodheart-Willcox Co., Inc.

you based on your job performance and attitude. As a technician, it is your responsibility to instill in the customer a sense of trust, value, and satisfaction with the work performed. This is accomplished mostly through your verbal communication with the customer and your general attitude and appearance. These factors combine to give an impression of your company to the customer.

It is essential to always be courteous when dealing with customers, even when things are not going well. This is especially true when the customer feels that a problem is not being handled properly. If the service call is a callback, be especially sensitive to the customer's concerns because you will need to regain his or her trust after a failure to remedy the problem the first time.

Servicing Heating Analysis Guide

Possible Cause	Complaint									Test Method–Remedy	See Service Procedure
	No Heat			Unsatisfactory Heat							
	System Will Not Start	Burner Won't Ignite	Burner Ignites–Locks Out	Main Burner Shuts Off Prior to T-Stat Being Satisfied	Short Cycles	Long Cycles	Soot or Fumes	Too Much Heat	Not Enough Heat		
No main power	✓									Test voltage	S-1
Faulty thermostat	✓									Test thermostat	S-3
Faulty limit switch		✓		✓						Test fan and limit control	S-6
Faulty flame sensor			✓							Test flame sensor	S-22
Faulty ignition control module		✓	✓							Test ignition control module	S-21
Faulty induced draft blower motor	✓									Test motor	S-8, S-9
Faulty wiring harness		✓								Test wiring	S-2
Broken or shorted igniter		✓								Test igniter	S-20
Faulty combustion relay	✓			✓						Test relay	S-5
Sensor not in flame, low micro-amps			✓							Test flame sensor	S-22
Open auxiliary limit		✓		✓						Push manual reset	S-7
Improper heat anticipator setting				✓	✓	✓				Check heat anticipator setting	S-3B
Improper airflow or distribution				✓	✓			✓	✓	Check duct static	S-17
Improper thermostat location					✓	✓		✓	✓	Relocate thermostat	

Amana Refrigeration, Inc.

Figure 3-5. Troubleshooting charts are created in many formats. This heating analysis guide for gas-fired furnaces uses a variation on the three-column format to identify problems, causes, and remedies.

Copyright Goodheart-Willcox Co., Inc.

Service Procedure S-17

Checking Duct Static S-17

The maximum and minimum allowable external static pressures are found in the specification section. These tables also show the amount of air being delivered at a given static by a given motor speed or pulley adjustment.

The furnace motor cannot deliver proper air quantities (CFM) against statics other than those listed.

Too great of an external static pressure will result in insufficient air that can cause excessive temperature rise, resulting in limit tripping, etc. Whereas not enough static may result in motor overloading.

To determine proper air movement, proceed as follows:

1. With clean filters in the furnace, use a draft gauge (inclined manometer) to measure the static pressure of the return duct at the inlet of the furnace. (Negative pressure.)
2. Measure the static pressure of the supply duct. (Positive pressure.)
3. Add the two readings together for total external static pressure.

Note: Both readings may be taken simultaneously and read directly on the manometer if so desired. If an air-conditioning coil or electronic air cleaner is used in conjunction with the furnace, the readings must also include these components.

4. Consult proper tables for the quantity of air.

If the total external static pressure exceeds the minimum or maximum allowable statics, check for closed dampers, registers, undersized and/or oversized poorly laid out ductwork.

Amana Refrigeration, Inc.

Figure 3-6. Troubleshooting charts often include or reference specific service procedures to be performed once the cause of the problem has been identified.

Pro Tip

Customer Perspective

Keep the customer's perspective in mind when making a service call. Treat the customer's needs as an emergency situation. In the eyes and mind of the customer, it is an emergency. In the case of no heating and no cooling problems, the customer may be experiencing fear due to uncertainty of how long the no service condition will continue and how expensive the repair will be. Provide as much information to the customer as you can to help reduce uncertainty.

3.3.1 Technician Appearance and Conduct

The appearance and conduct of the technician contribute to the company image. A neat personal appearance helps to create a sense of confidence that is necessary in dealing with the customer. It affects the customer's attitude toward the service performed. Wearing a service company's uniform or work shirt with the company name on it shows a professional company attitude, **Figure 3-7**.

Arriving on time and displaying good work habits create a desirable impression. Accurate, efficient work and respect for the customer's property build a customer's trust. The customer is then more likely to be satisfied with the service. The service technician should be aware that positive remarks concerning the company contribute to good customer relations. It is also important to have respect for company vehicles and equipment. This reflects a concern for the total operation of the company.

Goodheart-Willcox Publisher

Figure 3-7. A technician must maintain a professional appearance.

Copyright Goodheart-Willcox Co., Inc.

3.3.2 Arriving on the Job

After arriving at a jobsite, clearly state your name and identify your company. Confirm the equipment problem that the customer has experienced and make sure the customer knows you are there to fix the problem to his or her satisfaction. The customer should then be asked some specific questions:

- What has occurred?
- When was the problem first noticed?
- How many times has it occurred?

Any additional inquiries applicable to the situation should be made. A polite and patient attitude when asking these questions will help in obtaining the information needed to determine the problem and make the repair.

Any information that the customer volunteers concerning previous problems with the equipment should be written on the service contract or work order. Also, any interest shown by the customer in add-on equipment or new contractual agreements should be noted.

When servicing is completed, the proper billing forms should be presented and explained for the customer to sign. See **Figure 3-8**. If applicable, indicate to the customer what can be done in the future to prevent the problem from occurring.

Service records are absolutely essential if one wishes to establish a permanent business. These records contain details regarding ownership, type of equipment, type of work done, and materials used. This record enables "check backs" if the system does not operate correctly. Furthermore, it establishes sales prospects as systems get older.

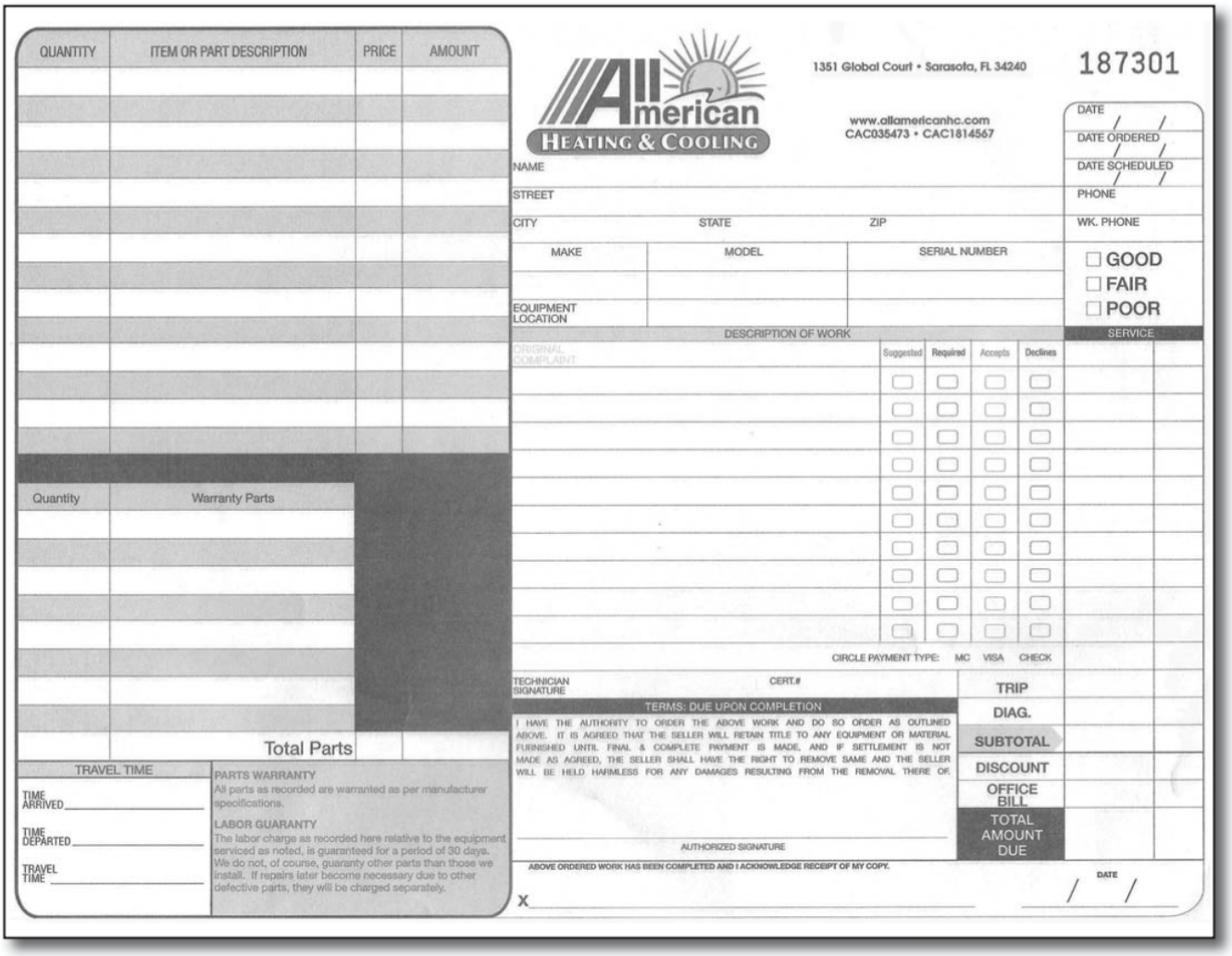

All American Heating & Cooling

Figure 3-8. Note the checklist on this inspection report for quick assessment of a unit.

Copyright Goodheart-Willcox Co., Inc.

3.3.3 Service Estimates

Many companies operating refrigeration equipment ask for bids when repair, replacement, or service is required. A service company bidding on this work needs someone who specializes in providing estimates. This specialist should be thoroughly acquainted with material costs, labor costs, and service problems. The individual must be able to judge how much time is necessary to do the repair. Records kept of service and maintenance work can be used as a reference for how much a job cost in the past or how much time it took a technician to perform a similar task.

Estimates must also factor in overhead expenses. Such expenses include equipment costs and office and shop services. In total, the estimate should account for all material costs, labor costs, and overhead costs while still including a margin of profit for the company.

3.3.4 Service Contracts

It is good business to offer contracts for maintenance and service. Many large companies have developed such contracts. There are two features of a service contract that often appeal to purchasers:

- A 24-hour availability service clause.
- An absolute guarantee of work done.

Consumers have become familiar with the concept of the ***maintenance service contract***. For example, all new cars are sold with an extended maintenance contract available to the owners. This means that the purchaser can extend the service contract on the vehicle. Service agreements are used for many items, including household appliances, television sets, personal computers, and other products. This wide application has created a public awareness of the benefits of maintenance contracts. Most HVACR service contracts include twice-a-year service. The heating unit is checked in the fall, and the air-conditioning unit is checked in the spring. This ensures that the units will be operable prior to their season of usage, **Figure 3-9**.

Thinking Green

Seasonal Inspections

During seasonal inspections, it is important to inspect and maintain all of the system components that may affect system efficiency. Rather than thinking of the seasonal service as a set of unrelated individual tasks, think about the seasonal inspection and service as a single operation designed to keep the entire system operating at peak efficiency.

A typical service contract offers a weekly, monthly, or annual rate. For this amount, the service company agrees to keep the heating and cooling units in good condition. This charge may or may not cover parts. Contracts may also be on a time-and-materials basis.

If a company sets up a service contract, technicians should be provided with procedures and check sheets. A check sheet should indicate the date, the name of the technician making the call, and a list of tasks to complete. The following are some tasks typically included on a check sheet:

- Test for refrigerant leaks.
- Check head pressure.
- Check low-side pressure.
- Check oil charge.
- Check water valve.
- Check water drain.
- Check and lubricate motor.
- Check belt condition and tension.
- Clean evaporator.
- Clean condenser.
- Straighten fins.
- Voltage readings.
- Amperage readings.
- Check circulating fans.
- Check/replace filters.
- Tighten electrical connections.
- Lubricate moving parts.

Any parts that may require future replacement should be indicated on the check sheet. Examples would be belts, filters, and other devices that usually have a limited and foreseeable operating life. By bringing those replaceable parts previously noted to the next service call, it will save any time that would have been necessary to return to the warehouse for parts.

3.3.5 Contractual Agreements

Contractual agreements are legal agreements that specify the terms and conditions of service that often include initial repair work and follow-up periodic maintenance. These are often purchased as a result of a service call. The form is filled out by the technician after speaking with the owner.

Contractual agreements vary, depending on the equipment and the services provided. To properly complete the forms for a service agreement, a technician must be familiar with all the various types of services offered and understand the benefits of these agreements for the customer.

Copyright Goodheart-Willcox Co., Inc.

All American Heating & Cooling
1351 Global Court, Sarasota, Florida 34340
www.allamericanhc.com

PRECISION TUNE-UP REPORT

CUSTOMER NAME:_____ DATE:_____
ADDRESS:_____
TELEPHONE:_____ EMAIL_____

SYSTEM #___

AIR HANDLER:
MAKE:_____
MODEL:_____
SERIAL:_____

CONDENSER:
MAKE:_____
MODEL:_____
SERIAL:_____

REPORT:

CONDENSING UNIT:
SUCTION PRESSURE:_____
HEAD PRESSURE:_____
COMPRESSOR RATED AMPS:_____
COMPRESSOR ACTUAL AMPS:_____
FAN MOTOR RATED AMPS:_____
FAN MOTOR ACTUAL AMPS:_____
LUBRICATION (IF REQUIRED)_____
COIL INSPECTION:_____
CONTACTOR & RELAYS:_____

EVAPORATOR UNIT:
FAN MOTOR RATING:_____
FAN MOTOR ACTUAL AMPS:_____
LUBRICATION (IF REQUIRED)_____
COIL INSPECTION:_____
INSPECT DRAIN PAN:_____
VACUUM DRAIN LINE:_____
ALGAE TABLETS ADDED:_____
CLEAN OR REPLACE FILTERS:_____
FILTER SIZE & TYPE:_____

REFRIGERANT ADDED LBS & TYPE:_____
ELECTRONIC AIR CLEANER TYPE AND SIZE:_____
HEPA FILTER TYPE AND SIZE:_____
DEHUMIDIFIER:_____
ZONE PANEL:_____
ENERGY RECOVERY VENTILATORS:_____
UV LIGHTS TYPE, SIZE, LOCATION:_____
GAS FURNACE:_____

ELECTRIC HEAT:_____
HEAT STRIP KW:_____
INSPECTION OF ELEMENTS:_____
AMPERAGE READING:_____

MISCELLANEOUS:_____
INSPECT THERMOSTAT:_____
INSPECT HUMIDISTAT:_____
BREAKER SIZE:_____

COMMENTS:_____
_____
_____

SERVICE TECHNICIAN:_____

All American Heating & Cooling

Figure 3-9. A seasonal tune-up report used by a technician for a customer with a maintenance service contract.

Copyright Goodheart-Willcox Co., Inc.

Chapter Review

Summary

- The three categories of servicing are repair, maintenance, and upgrades/system additions.
- Troubleshooting is the systematic analysis of a problem.
- Troubleshooting charts help a technician follow a standard procedure for identifying and fixing a problem. Troubleshooting charts usually contain columns that list the problem or customer complaint, the possible causes, and the repair or solution.
- When troubleshooting, a technician tests each major component listed as the possible cause of a problem to determine which specific component is the actual cause.
- A technician's appearance, timeliness, and communication skills affect the customer's sense of trust and satisfaction with the work being performed.
- Service estimates take into account the cost of materials; the length of time certain jobs take; the cost of labor; and the tools, instruments, and equipment needed.
- Maintenance and service contracts help ensure the longevity of a system. Technicians working on systems with service contracts use procedures and records to expedite their work.

Review Questions

Answer the following questions using information in this chapter.

1. Which of the following is an example of repair work?
   A. Changing furnace filters.
   B. Replacing a failed compressor.
   C. Lubricating a fan motor.
   D. Checking an evaporator drain.
2. Replacing a working blower fan with a new fan that is more energy efficient is an example of which type of service work?
   A. Repair.
   B. Maintenance.
   C. Upgrade/system addition.
   D. Installation.
3. Define *troubleshooting*.
   A. Analysis of a problem.
   B. Labor that corrects a problem.
   C. The use of instruments to solve a problem.
   D. All of the above.
4. Why is the procedure given in a troubleshooting chart a good method to use?
   A. It saves time.
   B. It saves money.
   C. It saves frustration.
   D. All of the above.
5. With whom should a technician first speak when troubleshooting a problem?
   A. The boss.
   B. The building owner.
   C. The manufacturer.
   D. The wholesaler.
6. What is the first step in troubleshooting?
   A. Attach proper test equipment.
   B. Determine the possible cause.
   C. Identify a specific remedy for the problem.
   D. Obtain a description of the problem.
7. When you are troubleshooting and servicing a unit, quick and hasty decisions may result in _____.
   A. additional and identical service work required later
   B. necessary callbacks
   C. the unit being only temporarily fixed
   D. All of the above.
8. What does the first column in a troubleshooting chart list?
   A. The model number.
   B. The necessary repair.
   C. The possible cause.
   D. The problem.
9. The way a business interacts with customers is called _____.
   A. annoying callback
   B. customer relations
   C. trouble maintenance
   D. troubleshooting
10. Why do units with maintenance agreements last longer and have fewer breakdowns?
    A. The units are tuned-up on a regular schedule.
    B. The units are cleaned on a regular schedule.
    C. Written analysis of the system is kept.
    D. All of the above.

Copyright Goodheart-Willcox Co., Inc.

CHAPTER 4 Energy and Matter

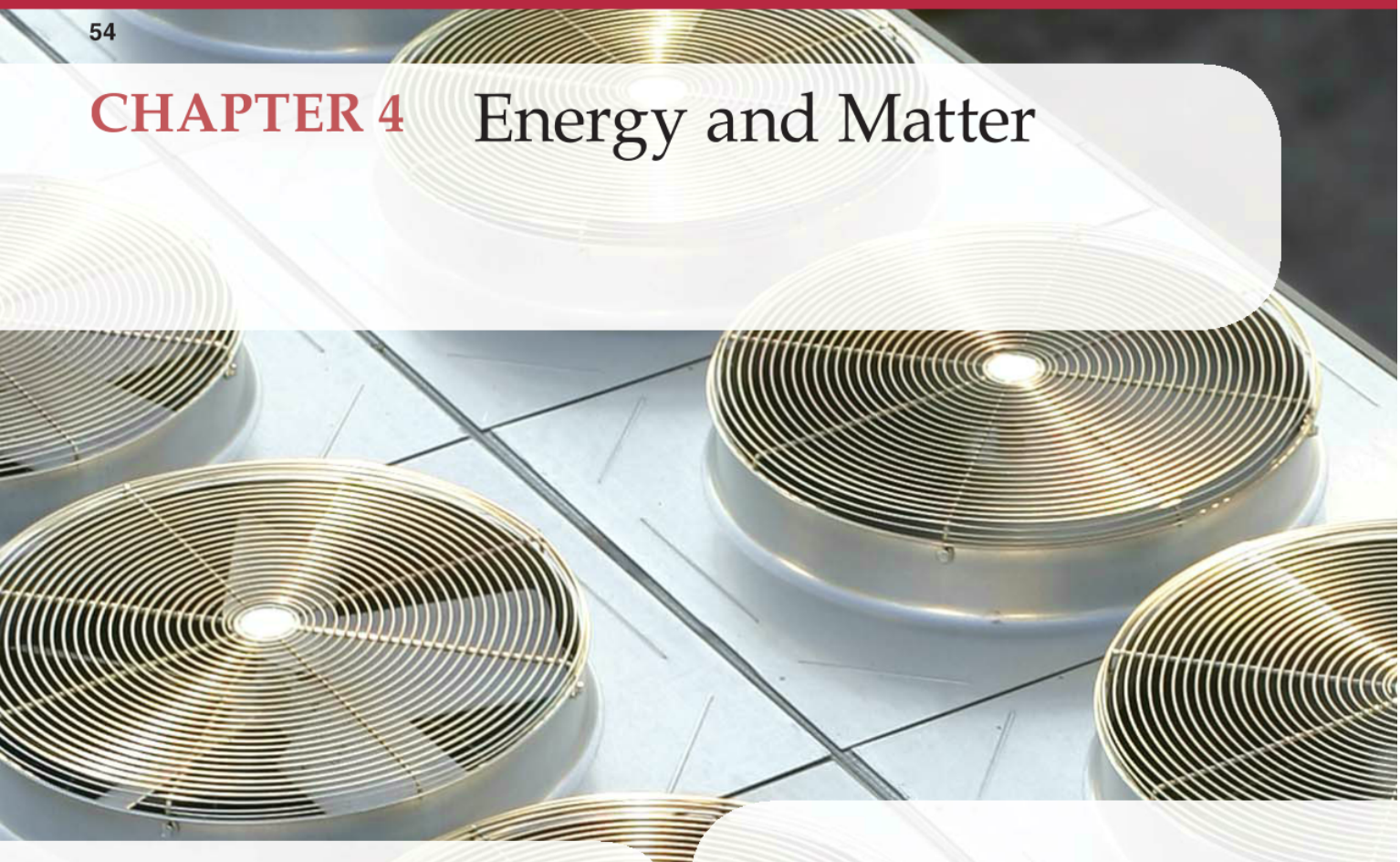

Chapter Outline

4.1 Systems of Measurement
4.2 Matter and Energy
4.3 Mass and Weight
4.4 Density
4.4.1 Specific Volume
4.4.2 Specific Gravity (Relative Density)
4.5 Force, Work, and Power
4.5.1 Force
4.5.2 Work
4.5.3 Power
4.5.4 The Relationship between Energy, Force, Work, and Power
4.6 Heat
4.6.1 Temperature and Heat Relationship
4.6.2 Calculating Heat Energy
4.6.3 Methods of Heat Transfer
4.6.4 Heat and States of Matter
4.7 Measuring Refrigeration Effect
4.7.1 Ton of Refrigeration Effect
4.7.2 US Customary Units for Measuring Refrigeration Effect
4.7.3 SI Derived Units for Measuring Refrigeration Effect

Learning Objectives

Information in this chapter will enable you to:

- Differentiate between matter and energy.
- Summarize the relationship between force, work, and power.
- Differentiate between the Fahrenheit, Celsius, Rankine, and Kelvin temperature scales.
- Use the appropriate formulas to calculate enthalpy, specific enthalpy, and changes in heat for a given substance.
- Compare the radiation, convection, and conduction methods of heat transfer.
- Illustrate the differences between the three states of matter.
- Differentiate between sensible heat and latent heat.
- Predict the effect of a drop in temperature or an increase in pressure on a saturated vapor.
- Summarize the relationships between mass, weight, and density.
- Explain the concepts of specific gravity and relative density.
- Compare the different units used to measure refrigeration effect.

Technical Terms

absolute temperature scale
ambient temperature
British thermal unit (Btu)
Celsius scale
cold
conduction
convection
density
energy
enthalpy
Fahrenheit scale
foot-pound (ft-lb)
force (F)
gas
heat
heat insulator
horsepower (hp)
joule (J)
Kelvin scale
kinetic energy
latent heat
latent heat of fusion
latent heat of vaporization
law of conservation of energy
liquid
mass
matter
newton
potential energy
power
radiation
Rankine scale
relative density
sensible heat
solid
specific enthalpy
specific gravity
specific heat capacity
specific volume
temperature
therm
ton of refrigeration
watt (W)
weight
work (W)

Introduction

The purpose of a refrigeration system is to transfer heat from one location to another. This process of heat transfer is based on scientific principles. Some of these principles and concepts—such as energy, power, heat, heat transfer, and temperature—are explained in this chapter. Additional scientific concepts are discussed in the next chapter.

This basic science knowledge is the foundation needed to understand the operation of a refrigeration system. By learning these fundamentals, you will have a deeper understanding of how a refrigeration system operates and be able to troubleshoot system problems effectively.

4.1 Systems of Measurement

This book provides values and measurements in both US Customary and SI units. The US Customary system is based on the English system of measurements. The base units of the US Customary measurement system include the foot (ft) for distance and the pound (lb) for mass.

The SI (*Système International d'Unités*) system is the modern version of the metric system. The base SI units include the meter (m) for distance and the gram (g) for mass. Additional US Customary and SI units will be explained in appropriate chapters and in the *Appendix*.

4.2 Matter and Energy

The universe is made up of energy and matter. You can think of ***matter*** as the building blocks of the universe. Everything we can touch is made up of matter. Matter exists in three states: solid, liquid, and gas. ***Energy*** is the ability to effect a change in matter. It can also be defined as the ability or capacity to perform work. Using the building block analogy, you can think of matter as a pile of blocks. Energy is required to transform those building blocks from a loose pile into a wall.

Energy comes in many different forms. It can be chemical, thermal, light, electrical, or mechanical. It can be further subdivided into potential and kinetic energy. ***Potential energy*** is stored energy. Examples of potential energy are water behind a dam, electrical energy in a battery, and a suspended weight that can fall or drop. ***Kinetic energy*** is energy doing work. Examples are water flowing over a dam, a battery lighting a bulb, and a falling weight. As you can see from these examples, energy of one type can change into another type under the right conditions. This is a foundational principle in the law of conservation of energy. The ***law of conservation of energy*** states that energy cannot be created or destroyed; it is simply changed from one form to another, **Figure 4-1**.

Think of the building block analogy once again. Kinetic energy is used to stack the building blocks to create the wall. As the wall is created, potential energy is stored in each of the stacked bricks. The higher a block is lifted, the more kinetic energy is used to lift it and the more potential energy it stores when it is in position. If the wall topples over, the potential energy is converted back to kinetic energy as the blocks fall to the ground.

4.3 Mass and Weight

The amount of a substance is commonly related to how much it weighs. Food and metals, for example, are sold on the basis of their weight. The gravitational force exerted by the earth on an object is expressed as the object's ***weight***. As the amount of a substance increases, the force of gravity acting on it increases proportionally.

The force of gravity diminishes as the distance from the earth increases. This means that an object's weight varies based on its distance from the earth. The object weighs less the farther it is from the earth. The term ***mass*** is used to express that the quantity of material is the same, regardless of the change in the force of gravity.

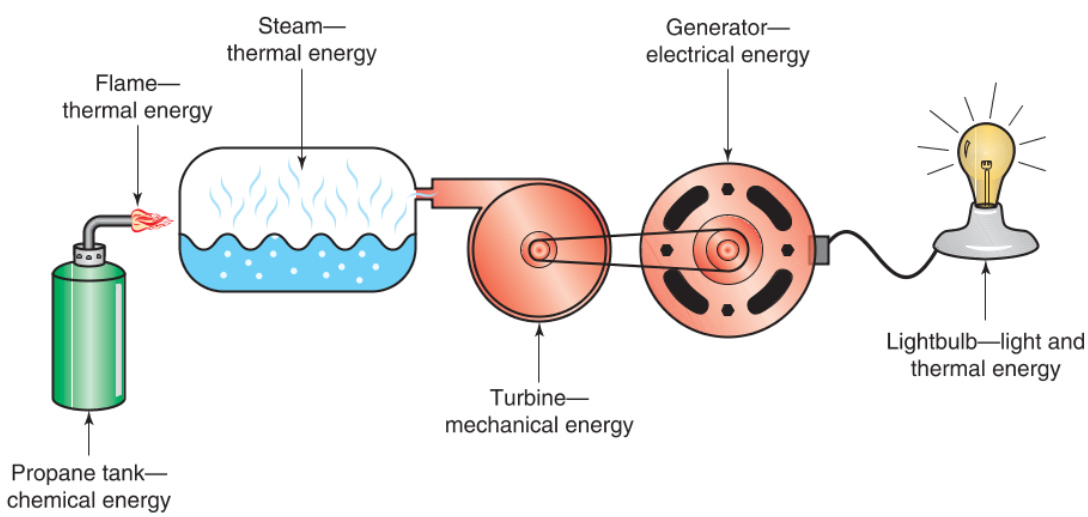

Goodheart-Willcox Publisher

Figure 4-1. This figure shows how energy is changed from one form to another. Some common energy forms include thermal, electrical, mechanical, and chemical.

Copyright Goodheart-Willcox Co., Inc.

Weight is often expressed as the force an object exerts on a scale. The US Customary units of weight are the ounce, pound, and ton. If an object weighs one pound at the earth's surface, it is said to have a mass of one pound. A small subscript *f* appearing under the pound unit abbreviation (lb_f) indicates that the unit refers to the object's weight (pounds of force or *pound force*). A small subscript *m* under the pound unit (lb_m) indicates that the unit refers to the object's mass (pounds of mass). In SI units, mass is measured in kilograms (kg). A kilogram is equivalent to 2.2 lb_m.

4.4 Density

Some substances are heavier than others. ***Density*** is a substance's mass per unit of volume. This refers to the amount of a substance within a given amount of space. Comparative weights of gases, liquids, and solids may be shown by either density or specific gravity, which will be discussed later in this chapter. In the US Customary system, density is expressed as pounds per cubic foot (lb/ft^3). In the SI system, density is expressed in kilograms per cubic meter (kg/m^3).

4.4.1 Specific Volume

When comparing densities of gases, it is common to express the densities in specific volumes. Avogadro's law states that at equal pressures and temperatures, a specific number of molecules of one gas will take up the same space as the same number of gas molecules of a different gas, regardless of mass. Since gases have different masses, a pound of one gas will have more or less molecules than a pound of another gas, and will therefore take up more or less space. ***Specific volume*** is the volume of a specific amount of gas under standard conditions. Standard conditions are 68°F (20°C) and 14.7 psia (101.3 kPa).

The volume of 1 lb of dry, clean air at standard conditions is 13.454 ft^3. By comparison, 1 lb of hydrogen occupies 178.9 ft^3. One pound of ammonia (R-717) occupies 21 ft^3. One pound of carbon dioxide (R-744) occupies only 8.15 ft^3, **Figure 4-2**.

In SI units, the volume of 1 kg of dry, clean air at standard conditions is 0.840 m^3. By comparison, 1 kg of hydrogen occupies 11.17 m^3. One kilogram of ammonia (R-717) occupies 1.311 m^3. One pound of carbon dioxide (R-744) occupies only 0.509 m^3.

If a gas has a greater specific volume than air, the gas is called a light gas. If it occupies less space than air, it is classified as a heavy gas. The specific volume is the inverse of the density. The higher a specific volume, the lower its density. The lower a specific volume, the higher the density.

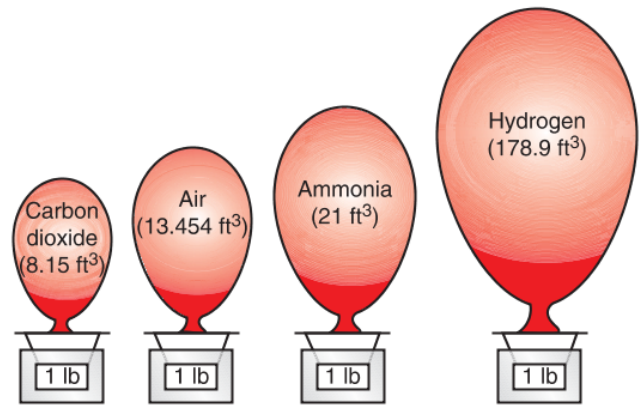

Goodheart-Willcox Publisher

Figure 4-2. Specific volume is used to compare the amount of space that a gas takes up when it weighs one pound. Hydrogen is the lightest gas, so it takes more molecules, which take up more space, to make one pound.

Unit equivalents, specific volume:

$$1\ lb/ft^3 = 16\ kg/m^3$$
$$1\ kg/m^3 = 0.0625\ lb/ft^3$$

4.4.2 Specific Gravity (Relative Density)

Specific gravity is the ratio of the mass of a certain volume of a liquid or a solid compared to the mass of an equal volume of water. Water is given a specific gravity of one. Objects that float on water have a specific gravity less than one. Objects that sink in water have a specific gravity greater than one. Mixtures of salt and water (brine) have a specific gravity greater than one.

The ***relative density*** of gases is defined as the ratio of the mass of a certain volume of a gas as compared to the mass of an equal volume of hydrogen. The mass of both gases are measured at 68°F and 29.92 in. Hg pressure. Avogadro's law states that different gases at equal temperatures, pressures, and volumes contain equal numbers of molecules, regardless of the densities of the gases being compared. Since hydrogen is the lightest of all gases, all other gases will have relative densities greater than 1.

4.5 Force, Work, and Power

Force, work, and power are interrelated ways of measuring the application of energy. In the sections that follow, the connections between these measurements will be explained.

4.5.1 Force

Force (F) is energy applied to matter that, unless counteracted by opposing forces, causes a change in the matter's velocity. The unit of force is the pound force (lb_f).

Copyright Goodheart-Willcox Co., Inc.

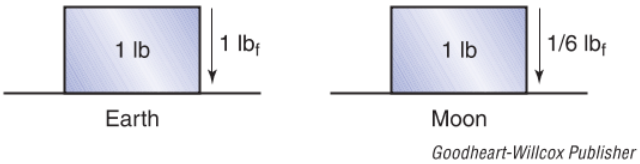

Figure 4-3. A one-pound object exerts 1 lb_f on the surface of the earth. On the moon, it exerts less force because the acceleration of gravity is less than 32.2 ft/s^2.

The pound force is that force which, applied to a one-pound mass, will result in an acceleration of 32.2 ft/s^2. This value of acceleration is known as the *acceleration constant*.

On earth, where the acceleration of gravity is 32.2 ft/s^2, an object with a mass of 1 lb exerts a 1 lb_f on the surface on which it rests, **Figure 4-3**. This force is the weight of the object. If the object of 1-lb mass were on the moon, where the gravity is about 1/6 that on earth, the weight of the mass would be 1/6 lb_f.

In SI units, the unit of force is the newton (N). A ***newton*** is that force which, applied to a one-kilogram mass, will accelerate the mass at a rate of 1 m/s^2. Since the acceleration due to gravity is 9.8 m/s^2 at the surface of the earth and the newton is based on an acceleration of 1 m/s^2, the mass (in kilograms) must be multiplied by a conversion factor of 9.8 when calculating gravitational force (weight) using SI units.

Formula for gravitational force (SI):

F (in newtons) = mass (in kg) × acceleration due to gravity (m/s^2)

Unit equivalents:

$$1\ lb_f = 4.45\ N$$
$$1\ N = 0.22\ lb_f$$

4.5.2 Work

Work (W) is force (F) multiplied by the distance (D) through which it travels. The US Customary unit of work is called the foot-pound. One ***foot-pound*** is the amount of work done in lifting a 1-lb weight a vertical distance of 1 ft, **Figure 4-4**. Work is sometimes expressed in inch-pounds. At such times, the distance through which the force acts is measured in inches.

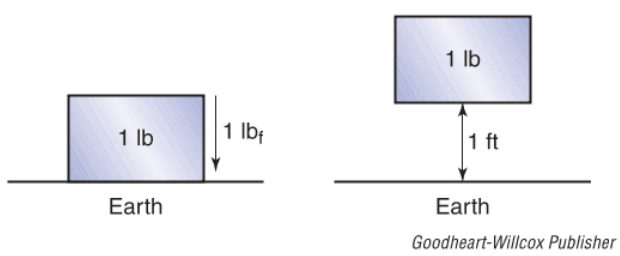

Figure 4-4. Work takes into account the distance over which force is applied.

The SI unit of work is called the joule (J). The ***joule (J)*** is the amount of work done by a force of one newton through a distance of one meter. Work may also be measured simply in units of newton-meters (N·m), although this unit is usually reserved for measuring torque (rotation or twisting).

Formula for calculating work:

Work = Force × Distance

Unit equivalents:

$$1\ ft\text{-}lb_f = 1.356\ J = 1.356\ N{\cdot}m$$
$$1\ J = 1\ N{\cdot}m = 0.737\ ft\text{-}lb$$

Example:

Calculate the work when lifting a weight of 2000 lb a vertical distance of 10′.

Solution:

Work = Force × Distance

$$W = 2000\ lb \times 10\ ft$$
$$W = 20{,}000\ ft\text{-}lb$$

or, expressed in inch-pound units,

$$W = 2000\ lb \times 10\ ft \times \left(\frac{12\ in}{1\ ft}\right)$$
$$W = 240{,}000\ in\text{-}lb$$

Example:

The propeller on a boat pushes the boat through the water with a force of 200 N. If the boat travels 10 km, how much work is done? (1 km = 1000 m).

Solution:

Work = Force × Distance

$$W = 200\ N \times 10\ km \times \left(\frac{1000\ m}{1\ km}\right)$$

Then continue with the original equation and new distance value.

$$W = 200\ N \times 10{,}000\ m$$
$$W = 2{,}000{,}000\ N{\cdot}m$$

4.5.3 Power

Power is the *rate* at which work is performed. It is calculated by dividing the total amount of work performed by the time during which the work was taking place.

The US Customary unit of mechanical power is ***horsepower***. One horsepower (hp) is the equivalent of 550 foot-pounds of work per second (ft-lb/s), **Figure 4-5**. The SI unit of power is the watt (W). A ***watt*** is a force

Copyright Goodheart-Willcox Co., Inc.

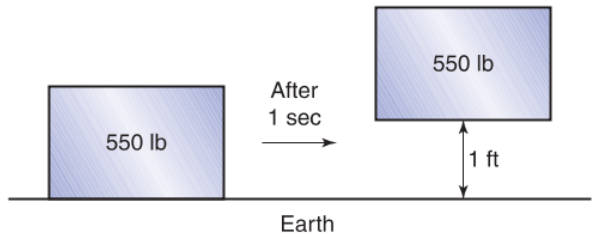

Goodheart-Willcox Publisher

Figure 4-5. Power takes into account the amount of time it takes to perform a certain amount of work.

of one newton moving through a distance of one meter in one second. The SI unit commonly used to measure mechanical power is the kilowatt (kW). A kilowatt is equal to 1000 watts.

Formula for calculating power:

$$\text{Power} = \frac{\text{Work}}{\text{Time}}$$

Unit equivalents:

$$1 \text{ hp} = 550 \text{ ft-lb/s} = 746 \text{ watts} = 0.75 \text{ kW}$$
$$1 \text{ kW} = 1000 \text{ watts} = 1000 \text{ J/s}$$
$$= 1000 \text{ N·m/s} = 1.33 \text{ hp}$$

Example:

A 2000-lb weight is lifted 10′ in two minutes. What is the required power?

Solution:

The work is 20,000 ft-lb (2000 lb × 10′). To calculate power, the time is expressed in seconds: 2 minutes = 120 seconds.

$$\text{Power} = \frac{\text{Work}}{\text{Time}}$$
$$P = \frac{20{,}000 \text{ ft-lb}}{120 \text{ s}}$$
$$P = 166.7 \text{ ft-lb/s}$$

Converting to horsepower:

Remember that 1 hp equals 550 ft-lb/s. Use that information to convert 166.7 ft-lb-s into horsepower:

$$P = 166.7 \text{ ft-lb/s} \times \frac{1 \text{ hp}}{550 \text{ ft-lb/s}}$$
$$P = 0.3 \text{ hp}$$

Example:

What is the power required to lift a mass of 100 kilograms at the rate of 10 meters per second?

Solution:

Before calculating power, first determine the values for force, work, and time. As discussed earlier, to determine gravitational force in SI units, multiply the mass by the acceleration due to gravity (9.8 m/s^2).

Calculating force (SI):

$$F = \text{mass} \times \text{acceleration due to gravity}$$
$$F = 100 \text{ kg} \times 9.8 \text{ m/s}^2$$
$$F = 980 \text{ N}$$

The required force is 980 N. To calculate work, multiply the force by the distance (W = F × D).

$$W = 980 \text{ N} \times 10 \text{ m}$$
$$W = 9800 \text{ N·m}$$

The work is 9800 N·m. Finally, to calculate power, divide the work by the amount of time (per second = 1 second).

$$\text{Power} = \frac{\text{Work}}{\text{Time}}$$
$$P = \frac{9800 \text{ N·m}}{1 \text{ s}}$$
$$P = 9800 \text{ N·m/s}$$

Note that 1 N m is equal to 1 joule. Therefore,

$$P = 9800 \text{ N·m/s} = 9800 \text{ J/s}$$

Since 1 watt is defined as 1 joule per second, the convert from joule/seconds to watts is on a 1 to 1 ratio.

$$P = 9800 \text{ J/s} = 9800 \text{ W}$$

To make this easier to read and write, convert 9800 W to kilowatts (kW) by dividing by 1,000.

$$P \text{ (in kW)} = P \text{ (in W)} \div 1000$$
$$= 9800 \text{ W} \div 1000$$
$$= 9.8 \text{ kW}$$

4.5.4 The Relationship between Energy, Force, Work, and Power

Weightlifting provides a good analogy for remembering the relationship between energy, force, work, and power. Potential energy is the strength that the weightlifter feels before stepping up to the barbell. When using that energy to push upward on the barbell, the weightlifter is applying a force. When lifting the barbell overhead, the lifter has caused kinetic energy and performed work. The power of the weightlifter is measured by the weight lifted and the speed at which the weight is raised overhead.

4.6 Heat

Heat is a form of energy that results in the motion of atoms. Atoms are considered the smallest indivisible

Copyright Goodheart-Willcox Co., Inc.

part of an element because if the atoms were broken down further, they would no longer have the characteristics of that element. All substances are made up of tiny atoms, which combine to make molecules. All atoms are in a state of rapid motion.

As the temperature of a substance increases, the atoms move more rapidly. As the temperature drops, the atom movement slows down. If all heat is removed from a substance, all molecular motion stops. The temperature at which all heat is removed is called *absolute zero*.

Cold means low temperature or lack of heat. Cold is the result of removing heat. A refrigerator produces *cold* by drawing away heat from the inside of the refrigerator cabinet. The refrigerator does not destroy the heat. It pumps heat from the inside of the cabinet to the outside.

Heat always travels from a substance at a higher temperature to a substance at a lower temperature. If a substance is warmed, heat is added. If a substance is cooled, heat is removed.

The amount of heat in a substance equals the mass of the substance multiplied by its temperature. The amount of heat in a substance may greatly affect the nature of the substance. Adding heat causes most substances to expand; removing heat causes them to contract.

4.6.1 Temperature and Heat Relationship

Temperature is a measure of the heat intensity or heat level of a substance. Remember that all atoms in a substance are in motion. As the substance gets hotter, those atoms move faster. As the substance cools, the atoms slow down.

Temperature alone does not give the amount of heat energy in a substance. In order to calculate the total heat contained in a substance, the temperature must be multiplied by the mass of the substance. For example, a small copper dish weighing a few grams, heated to 1340°F (727°C) does not contain as much heat energy as 5 kilograms of copper heated to 284°F (140°C). However, the heat intensity of the smaller dish is greater. It is important not to use the words *heat* and *temperature* carelessly.

Temperature Scales

The two most common temperature scales are the Fahrenheit scale and the Celsius scale. The ***Celsius scale*** is used in the SI system of measurement and is named in honor of Anders Celsius, the Swedish astronomer who recommended the new system. Celsius is sometimes called the *Centigrade* scale. The ***Fahrenheit scale*** is named after German scientist Daniel Fahrenheit and is used in the US Customary system.

The increments of both scales are based on the temperature of melting ice at sea level (1 atmosphere of pressure) and the temperature of boiling water at sea level. On the Fahrenheit scale, the temperature of melting ice is 32°F. The temperature of boiling water is 212°F. This provides 180 spaces or degrees between the freezing and boiling temperatures.

On the Celsius scale, the temperature of melting ice is 0°C. The temperature of boiling water is 100°C. There are 100 spaces or degrees on the scale between freezing and boiling.

Formula for temperature conversions:

$$F = 9/5 \times C + 32$$
$$C = (F - 32) \times 5/9$$

where

F = temperature in degrees Fahrenheit

C = temperature in degrees Celsius

The 9/5 conversion factor is the same ratio as the number of spaces or degrees between the freezing and boiling points of water on the two scales: 180/100.

Example:

Convert 22°C to degrees Fahrenheit.

Solution:

Use the formula for converting degrees Celsius to degrees Fahrenheit:

$$F = 9/5 \times C + 32$$

Insert the known Celsius value:

$$F = 9/5 \times 22 + 32$$

Perform the multiplication:

$$F = 39.6 + 32$$

Add the remaining values for the total:

$$F = 71.6°$$

Temperature conversion charts are provided in the *Appendix*.

Absolute Temperature Scales

Absolute zero is the temperature at which molecular motion stops. It is the lowest temperature possible. There is no heat in the substance at this point. An ***absolute temperature scale*** is a temperature scale that uses absolute zero as its starting point. It is used in cryogenics (very low temperature work). There are two absolute temperature scales. These two scales are the ***Rankine scale*** (Fahrenheit absolute scale) and the ***Kelvin scale*** (Celsius absolute scale).

The Rankine scale uses the same increments (spaces between degrees) as the Fahrenheit scale. However, zero on the Rankine scale (0°R) is equivalent to –460°F. The Kelvin scale uses the same increments as the Celsius scale. However, zero on the Kelvin scale (0K) is equivalent to –273°C. Note that scientists

Copyright Goodheart-Willcox Co., Inc.

omit the degree symbol (°) when writing Kelvin temperatures. Therefore, Kelvin temperatures are often expressed with the numerical value and just the letter *K*, not using a degree symbol. **Figure 4-6** compares the Celsius, Kelvin, Fahrenheit, and Rankine scales.

Absolute temperature scales are not used by the technician during normal service work. They are typically used by engineers in designing various parts of heating and air conditioning systems. The absolute temperature scales are also used to identify the operational performance of a product. These ratings can then be used by the technician to compare one manufacturer's products with those of another manufacturer.

Problem:

What are the temperatures on the Kelvin scale at which water freezes and boils?

Solution, freezing point:

Water freezes at 0°C. A temperature on the Kelvin scale is 273 degrees greater than the same temperature on the Celsius scale. Therefore, the freezing temperature of water is 273 degrees above zero Kelvin (K), or 273K.

Solution, boiling point:

Water boils at 100°C. The boiling point of water on the Kelvin scale will be: 100 + 273 = 373K.

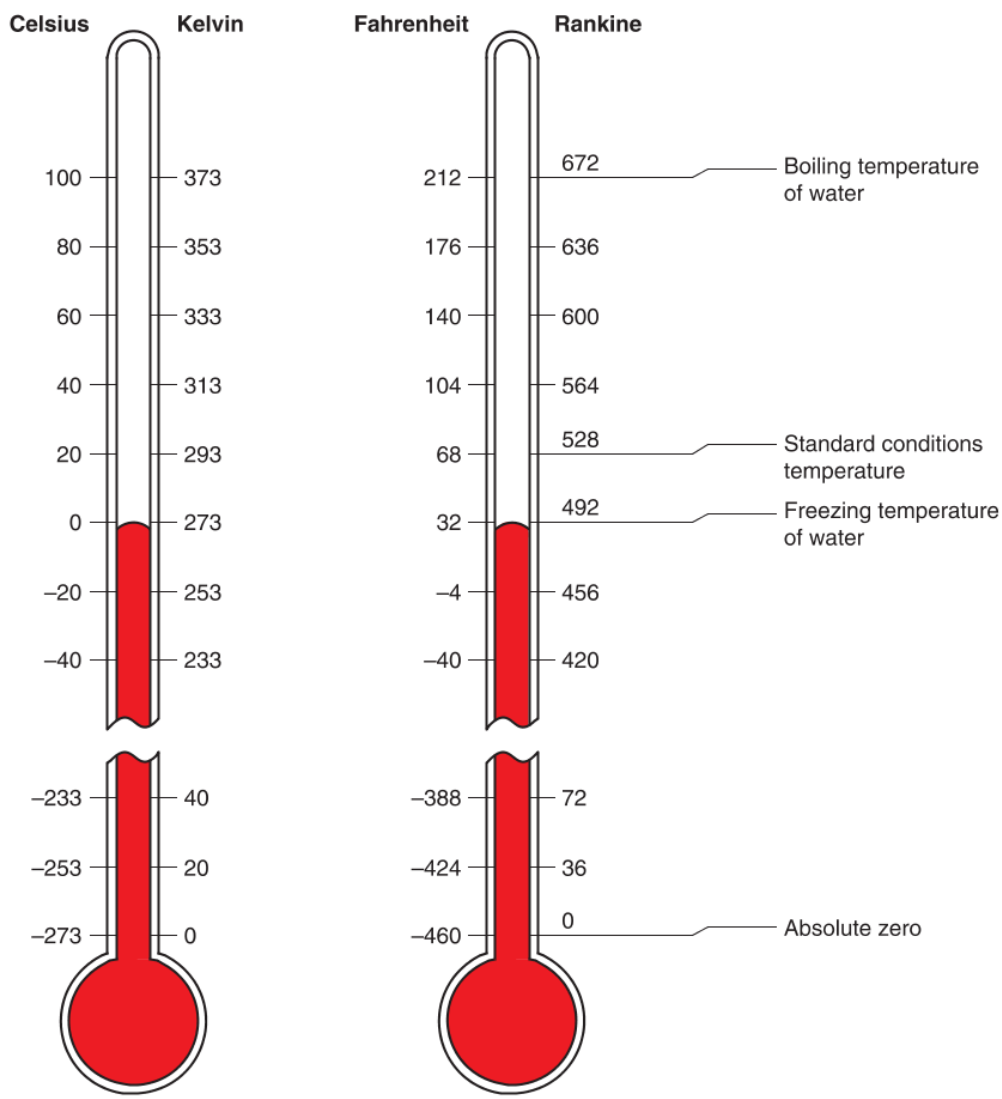

Goodheart-Willcox Publisher

Figure 4-6. A comparison between the Kelvin, Celsius, Fahrenheit, and Rankine temperature scales is shown here.

Copyright Goodheart-Willcox Co., Inc.

Ambient Temperature

Ambient temperature is the temperature of the air surrounding an object. This may be in reference to a motor that is indoors or to a condenser that is outdoors. Ambient depends on the context and the part in question. For example, a motor operated at full power may be guaranteed not to get hotter than 72°F (40°C) above the ambient temperature. Then, if the room temperature (ambient temperature) is 86°F (30°C), the temperature of the motor could get as high as 158°F (70°C) when working at full power.

Ambient temperature is not usually constant. It may change day-by-day and hour-by-hour, depending on usage of the space, sunshine, and many other factors. This is why most equipment specifications will include a maximum ambient temperature or an average ambient temperature.

4.6.2 Calculating Heat Energy

As mentioned earlier, temperature indicates the intensity of heat in a substance, but not the quantity of heat. To determine the quantity of heat in a substance, you need to know the temperature and the mass of the substance. You also need to know the specific heat capacity of the substance.

Specific Heat Capacity

The ***specific heat capacity*** of a substance is the amount of heat added or released to change the temperature of one pound of a substance by 1°F. In the SI system, specific heat capacity is the amount of heat needed to change one kilogram of a substance by one degree Kelvin. The specific heat capacity of a substance is the same in both the Kelvin and Celsius scales because they use the same increments.

Different substances require different amounts of heat per unit of mass to cause changes in temperature. The heat required to change the temperature of a substance also varies depending on whether the substance is in its solid, liquid, or gaseous state. The specific heat capacities of common substances are shown, in both SI and US Customary units, in **Figure 4-7**. Note that even though water and ice are the same substance, they have different specific heat capacities because they are in different physical states: solid and liquid.

Heat Units

The US Customary unit of heat is the ***British thermal unit (Btu)***. The Btu is the amount of heat required to raise the temperature of 1 lb of water 1°F. See **Figure 4-8A**. Where large heat loads are involved, the unit ***therm*** (equaling 100,000 Btu) is often used.

In the SI system, the unit of heat is the joule (J). A joule is a very small unit of heat. For refrigeration work, the kilojoule (kJ) is used. One kilojoule equals 1000 joules. The amount of heat required to raise the temperature of 1 kg of water 1°C is equal to 4.187 kJ. See **Figure 4-8B**.

Calculating Change in Heat

Whether a substance is cooled or heated, the change in heat is calculated the same way, providing no physical state change occurs (from solid to liquid or liquid to gas, etc.). The temperature difference is multiplied by the mass of the substance, which is then multiplied by the specific heat of the substance. The result is the amount of heat added or removed to cause the stated temperature change. The following are formulas for US Customary and SI calculations. The Δ symbol is

Specific Heat Capacities of Common Substances

Substance	Specific Heat Capacity	
	Btu/lb°F	kJ/kgK
Alcohol	0.615	2.575
Brick	0.200	0.837
Copper	0.095	0.398
Glass	0.187	0.783
Glycerin	0.576	2.412
Graphite	0.200	0.837
Ice	0.504	2.110
Iron	0.129	0.540
Mercury	0.033	0.139
R-12	0.213	0.892
R-22	0.260	1.089
R-134a	0.204	0.854
R-410A	0.200	0.840
R-502	0.255	1.068
R-717 (liquid ammonia @ 40°F)	1.100	4.606
R-744 (carbon dioxide @ 40°F)	0.600	2.512
Salt brine 20%	0.850	3.559
Water (R-718)	1.000	4.187
Wood	0.327	1.367

Goodheart-Willcox Publisher

Figure 4-7. This table shows the specific heat capacity values for some substances. See the *Appendix* for a more extensive list.

Copyright Goodheart-Willcox Co., Inc.

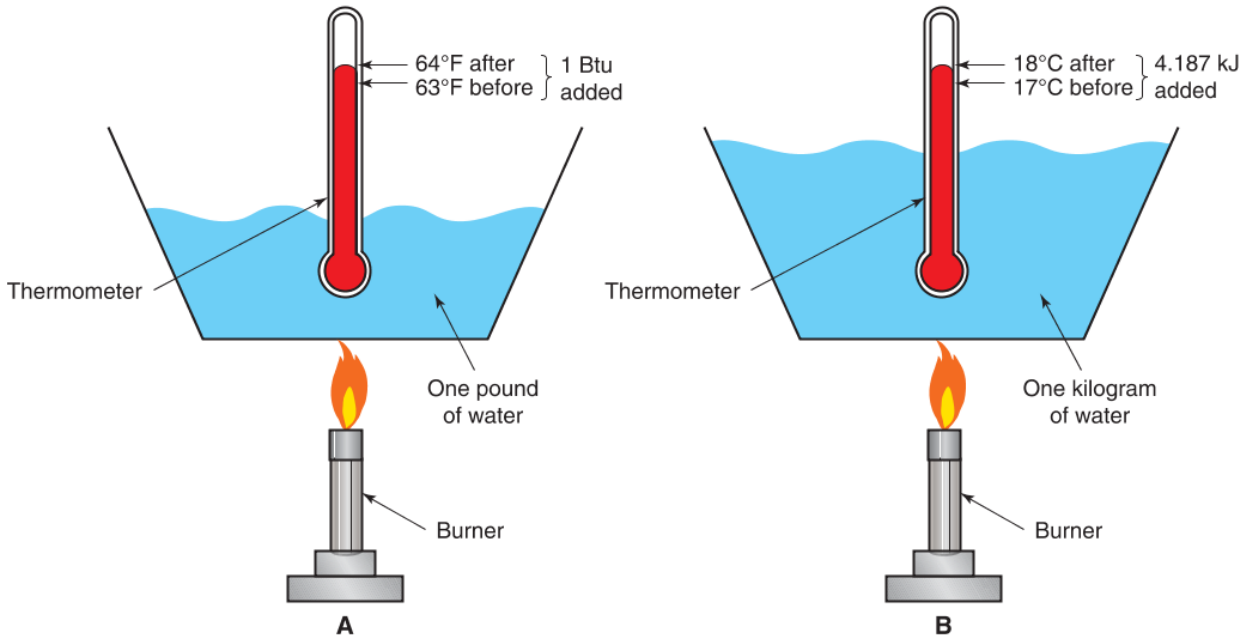

Goodheart-Willcox Publisher

Figure 4-8. Each unit of heat energy (Btu and joule) is defined as the amount of heat required to raise the temperature of a specific quantity of water by a specific amount. A—Raising the temperature of one pound of water from 63°F to 64°F requires one British thermal unit of heat. B—It takes 4.187 kJ of heat to raise the temperature of 1 kg of water from 17°C to 18°C.

used to show a change, such as a change in temperature or a change in heat.

Formula for calculating change in heat:

$$\Delta Q = m \times c \times \Delta T$$

For US Customary calculations:

ΔQ = change in heat (Btu)
m = mass (lb)
c = specific heat capacity (Btu/lb°F)
ΔT = change in temperature (°F)

For SI calculations:

ΔQ = change in heat (kJ)
m = mass (kg)
c = specific heat (kJ/kg°C or kJ/kgK)
ΔT = change in temperature (°C or K)

Unit equivalents, heat:

1 kJ = 0.948 Btu
1 Btu = 1.055 kJ

Unit equivalents, temperature:

1°C = 1K
1°F = 1°R

Unit equivalents, specific heat:

1 Btu/lb°F = 4.187 kJ/kg°C
1 kJ/kg°C = 0.2388 Btu/lb°F

Example:

Calculate the amount of heat (in Btu) required to raise the temperature of 62.4 lb of water from 40°F to 80°F.

Solution:

The specific heat capacity (c) of water is 1 Btu/lb°F. To calculate the change in heat (ΔQ), multiply the specific heat capacity (1 Btu/lb°F) by the change in temperature (80°F – 40°F = 40°F) and the mass (62.4 lb).

$\Delta Q = m \times c \times \Delta T$

ΔQ = 62.4 lb × 1 Btu/lb°F × (80°F – 40°F)

Start by solving the equation within the parenthesis: (80°F – 40°F).

ΔQ = 62.4 lb × 1 Btu/lb°F × (40°F)

Multiply out the equation one pair at a time, starting on the left.

ΔQ = 62.4 Btu/°F × (40°F)

Multiply the final pair to solve the equation.

ΔQ = 2496 Btu

Example:

Determine the amount of heat (in Btu) that must be removed to cool 40 lb of 20% salt brine from 60°F to 20°F.

Solution:

According to **Figure 4-7**, the specific heat capacity of 20% salt brine is 0.85 Btu/lb°F. Multiply this value

Copyright Goodheart-Willcox Co., Inc.

by the change in temperature and the mass to calculate the change in heat.

$\Delta Q = m \times c \times \Delta T$

$\Delta Q = 40 \text{ lb} \times 0.85 \text{ Btu/lb°F} \times (60°\text{F} - 20°\text{F})$

Start by solving the equation within the parenthesis: (60°F – 20°F).

$\Delta Q = 40 \text{ lb} \times 0.85 \text{ Btu/lb°F} \times (40°\text{F})$

Multiply out the equation one pair at a time, starting on the left.

$\Delta Q = 34 \text{ Btu/°F} \times (40°\text{F})$

Multiply the final pair to solve the equation.

$\Delta Q = 1360 \text{ Btu}$

Example:

Find the amount of heat (in kJ) required to raise the temperature of 1 kg of water from 4°C to 27°C.

Solution:

The specific heat capacity of water is 4.187 kJ/kg°C. To determine the change in heat (ΔQ), multiply 4.187 kJ/kg°C by the mass (1 kg) and change in temperature (27°C – 4°C = 23°C).

$\Delta Q = m \times c \times \Delta T$

$\Delta Q = 1 \text{ kg} \times 4.187 \text{ kJ/kg°C} \times (27°\text{C} - 4°\text{C})$

Start by solving the equation within the parenthesis: (27°F – 4°F).

$\Delta Q = 1 \text{ kg} \times 4.187 \text{ kJ/kg°C} \times (23°\text{C})$

Multiply out the equation one pair at a time, starting on the left.

$\Delta Q = 4.187 \text{ kJ/°C} \times (23°\text{C})$

Multiply the final pair to solve the equation.

$\Delta Q = 96.301 \text{ kJ}$

Example:

Find the amount of heat (kJ) that must be removed to cool 15 kg of 20% salt brine from 16°C to 7°C.

Solution:

According to **Figure 4-7**, the specific heat capacity of 20% salt brine in SI units is 3.559 kJ/kg°C. Use the values for mass (15 kg) and change in temperature (16°C – 7°C = 9°C) to find the change in heat.

$\Delta Q = m \times c \times \Delta T$

$\Delta Q = 15 \text{ kg} \times 3.559 \text{ kJ/kg°C} \times (16°\text{C} - 7°\text{C})$

Start by solving the equation within the parenthesis: (16°F – 7°F).

$\Delta Q = 15 \text{ kg} \times 3.559 \text{ kJ/kg°C} \times (9°\text{C})$

Multiply out the equation one pair at a time, starting on the left.

$\Delta Q = 53.385 \text{ kJ/°C} \times (9°\text{C})$

Multiply the final pair to solve the equation.

$\Delta Q = 480.465 \text{ kJ}$

Enthalpy

Enthalpy, as it is used in refrigeration work, is the total amount of heat in a substance, calculated from an accepted reference temperature. For water and water vapor calculations, the reference temperature is 32°F (0°C). For refrigerant calculations, the accepted reference temperature is –40°F (–40°C).

The formula for calculating enthalpy is identical to the formula for calculating change in heat. The difference between calculating enthalpy and calculating a change in heat is that, in an enthalpy calculation, the difference in temperature is the difference between a single measured temperature and the reference temperature. In a change in heat calculation, the difference in temperature is calculated between two measured temperatures.

Formula for calculating enthalpy:

$$H = m \times c \times \Delta T$$

where

H = enthalpy
m = mass of substance
c = specific heat of substance
ΔT = difference between measured temperature and reference temperature

Example:

What is the enthalpy of 1 lb of water at 212°F, assuming 0 enthalpy at 32°F?

Solution:

The specific heat of water (c) is 1 Btu/lb°F. Thus,

$H = m \times c \times \Delta T$

$H = 1 \text{ lb} \times 1 \text{ Btu/lb°F} \times (212°\text{F} - 32°\text{F})$

Start by solving the equation within the parenthesis: (212°F – 32°F).

$H = 1 \text{ lb} \times 1 \text{ Btu/lb°F} \times (180°\text{F})$

Multiply out the equation one pair at a time, starting on the left.

$H = 1 \text{ Btu/°F} \times (180°\text{F})$

Multiply the final pair to solve the equation.

$H = 180 \text{ Btu}$

The total enthalpy of 1 lb of water at 212°F is 180 Btu.

Example:

What is the total enthalpy of 5 kg of water at 80°C, assuming 0 enthalpy at 0°C?

Solution:

The specific heat of water (c) is 4.187 kJ/kg°C. Thus,

$H = 5 \text{ kg} \times 4.187 \text{ kJ/kg°C} \times (80°\text{C} - 0°\text{C})$

Copyright Goodheart-Willcox Co., Inc.

Start by solving the equation within the parenthesis: (80°C – 0°C).

$H = 5\text{ kg} \times 4.187\text{ kJ/kg°C} \times (80\text{°C})$

Multiply out the equation one pair at a time, starting on the left.

$H = 20.935\text{ kJ/°C} \times (80\text{°C})$

Multiply the final pair to solve the equation.

$H = 1674.8\text{ kJ}$ (total enthalpy at 80°C)

The total enthalpy of 5 kg of water at 80°C is 1674.8 Btu.

Specific Enthalpy

Specific enthalpy is enthalpy per unit of mass. It is measured in Btu per pound or kilojoules per kilogram. Tables showing the enthalpy of substances and pressure-enthalpy diagrams are based on specific enthalpy. Specific enthalpy is calculated by dividing the enthalpy by the mass of the substance.

Formula for calculating specific enthalpy:

$$h = \frac{H}{m}$$

where

h = specific enthalpy (Btu/lb or kJ/kg)

H = enthalpy (Btu or kJ)

m = mass (lb or kg)

Unit equivalents:

1 kJ/kg = 0.4299 Btu/lb

1 Btu/lb = 2.326 kJ/kg

Example:

If 100 lb of a substance absorbs 2000 Btu of energy when heated from the reference state of 0 Btu/lb, what is the specific enthalpy?

Solution:

$$h = \frac{H}{m}$$

$$h = \frac{2000\text{ Btu}}{100\text{ lb}}$$

$$h = 20\text{ Btu/lb}$$

4.6.3 Methods of Heat Transfer

Heat always flows from a warmer substance to a cooler substance. The faster moving atoms give up some of their energy to slower moving atoms. Therefore, each fast atom slows down a little and each slower atom moves a little faster.

Heat can be transferred or moved from one body to another by radiation, conduction, or convection. Three methods of heat transfer are commonly used in comfort heating and cooling, **Figure 4-9**.

Radiation

Radiation is the transfer of heat by heat rays. The earth receives heat from the sun by radiation. Light rays from the sun turn into heat when they strike materials. Materials that are more translucent absorb less heat from the passing light. For example, air is heated very little as light rays pass through it. Likewise, a glass pane absorbs little heat as rays pass through it. An object that is completely opaque allows none of the light to pass through, so the light is either absorbed by the material, generating heat, or the light is reflected away.

Light generates more heat when striking dark-colored objects than when striking light-colored or

Radiation Conduction Convection

King Electrical Mfg. Co.; Sealed Unit Parts Co. Inc.; Cadet Manufacturing Co.

Figure 4-9. The three methods of heat transfer are radiation, conduction, and convection.

Copyright Goodheart-Willcox Co., Inc.

polished surfaces. This is because light-colored and polished objects reflect more rays than they absorb. Only absorbed light is changed into heat. Rough, dark-colored surfaces will get hotter than light-colored or polished surfaces because they absorb more of the light.

Any heated surface loses heat to cooler surrounding space or surfaces through radiation. Likewise, a cold surface will absorb radiated heat. Some space heating systems use radiant heating sources located in the ceilings, walls, or floors.

Conduction

Conduction is the flow of heat through a material due to molecular vibrations in the material. For example, a piece of iron with one end in a fire will soon become warm from end to end. This is an example of the transfer of heat by conduction. The heat travels through the iron, using the metal as the conducting medium. The flow can also be from one substance to another substance in direct contact.

Substances differ in their ability to conduct heat. In general, substances that are good conductors of electricity, such as copper, aluminum, and iron, are also good conductors of heat. Substances that conduct heat poorly, such as cork, foam plastics, and mineral wool, are called ***heat insulators***. Such substances are used to insulate refrigerators and homes. Structures can use insulators to maintain an inside temperature that is different from the outside temperature.

Convection

Convection is the movement of heat from one place to another by way of a liquid or gas. For example, heated air moves from a forced-air furnace into the rooms of a house. The heated air warms the rooms. Then cool air returns through cold air ducts to receive another supply of heat. The same method may be used to cool a space. Unwanted heat is collected and discharged outside the space. A convection oven heats by convection. It transfers heat to its contents through the air in the oven.

4.6.4 Heat and States of Matter

Substances exist in three states, depending on their temperature, pressure, and heat content. For example, water at atmospheric pressure is a solid at temperatures below 32°F (0°C). It is a liquid from 32°F (0°C) to 212°F (100°C). At 212°F (100°C) and above, water is a vapor (gas). The 32°F (0°C) freezing point and 212°F (100°C) boiling point for water apply only at atmospheric pressure. Water is shown in its three states in **Figure 4-10**.

A ***solid*** is any physical substance that keeps its shape even when not contained. The molecules of a solid are strongly attracted to each other. They stay in the same relative position to each other, and considerable force is necessary to separate them. Yet, they are in a condition of rapid motion or vibration. The rate of vibration depends on the temperature. The lower the temperature, the slower the molecules vibrate. The higher the temperature, the faster the vibration.

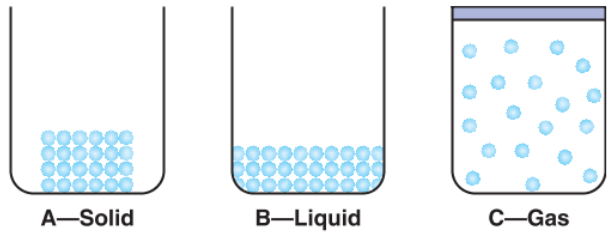

Goodheart-Willcox Publisher

Figure 4-10. This figure shows the three states of water. A—Solid state. The shape and volume of the block of ice are definite. Note the empty space around the sides of the block. B—Liquid state. The water takes the shape of its container, but it does not continue expanding. C—Gaseous state. Vapor or gas expands to fill its entire container and exerts pressure uniformly in all directions.

A ***liquid*** is any substance that has no definite shape but has a definite volume. A liquid takes the shape of its container. However, its molecules strongly attract each other. Think of the molecules as swimming among their fellow molecules without ever leaving them. The higher the temperature, the faster the molecules swim. Warmer molecules move upward toward the top of the container. This is because they take up more space because of their rapid movement. They become lighter (less dense) than colder molecules.

A ***gas*** is any physical substance with no definite shape or volume, which expands to fill its container. The molecules, having little or no attraction for each other, travel in straight lines. They fly around, bouncing off each other, off molecules of other substances, or off the container walls. They have little or no attraction for any other substance. **Figure 4-10C** shows how gases behave.

Almost any substance can be made to exist as a solid, a liquid, and a gas. Any molecule can be made to vibrate, swim, or fly. Adding heat causes most substances to expand and removing heat causes them to contract. All substances change their physical state if enough heat is added or removed. For instance, water is a solid (ice) at temperatures below 32°F (0°C) at atmospheric pressure. If enough heat is added to the ice, it melts and becomes water, a liquid. Additional heat causes the water to turn into steam, a vapor. Understanding how heat is absorbed and released during phase changes provides the basis for understanding how refrigeration systems function.

Copyright Goodheart-Willcox Co., Inc.

Latent Heat

Heat that brings about a change of state with no change in temperature is called ***latent heat***. In refrigeration work, the physics of latent heat is especially important because the cooling effect of refrigeration systems is accomplished through evaporation and condensation of the refrigerant. Evaporation is a change in state from liquid to gas. Condensation is a change in state from gas to liquid.

Changes of state occur at the certain temperature and pressure combinations for a given substance. When a substance is at the correct temperature and pressure, enough heat is added or removed to produce a state change. However, all of the heat energy added or removed while the substance is at its freezing point or boiling point is used to change the state of the material. The heat used to change its physical state does not change the temperature of the substance.

Examine the graph in **Figure 4-11**. Note that a considerable amount of heat (144 Btu/lb, 335 kJ/kg) was added between points B and C. Even so, the temperature did not change. This heat was required to change the ice into water. The heat required to change a substance from a solid to a liquid or from a liquid to a solid is called the ***latent heat of fusion***. If a liquid substance is at its freezing temperature, the latent heat of fusion must be removed from the substance to cause it to change to a solid.

Sometimes the heat added to a substance to cause it to melt is referred to as the *latent heat of melting* and the heat taken away to freeze a substance is referred to as the *latent heat of freezing*. Both of these terms refer to the same heat as the latent heat of fusion.

Between points D and E in **Figure 4-11**, 970 Btu/lb (2257 kJ/kg) of heat were added, and yet the temperature did not change. This heat was required to change the water to steam. The latent heat added to a liquid to change it into a gas or the latent heat removed from a gas to change it into a liquid, is called the ***latent heat of vaporization***. Sometimes, the latent heat removed from a gas to cool it into a liquid is referred to as the *latent heat of condensation*.

Figure 4-12 shows the latent heat of vaporization for water and several common refrigerants. For water, this value is 970 Btu/lb (2257 kJ/kg). Every substance has a different latent heat value. This is because each substance has a different molecular structure.

Sensible Heat

Heat that causes a change in the temperature of a substance is called ***sensible heat***. When heat is added to a substance and the temperature rises as the heat is added, the increase in heat is sensible heat. Likewise, heat may be removed from a substance. If the temperature of the substance falls, the heat removed is sensible heat.

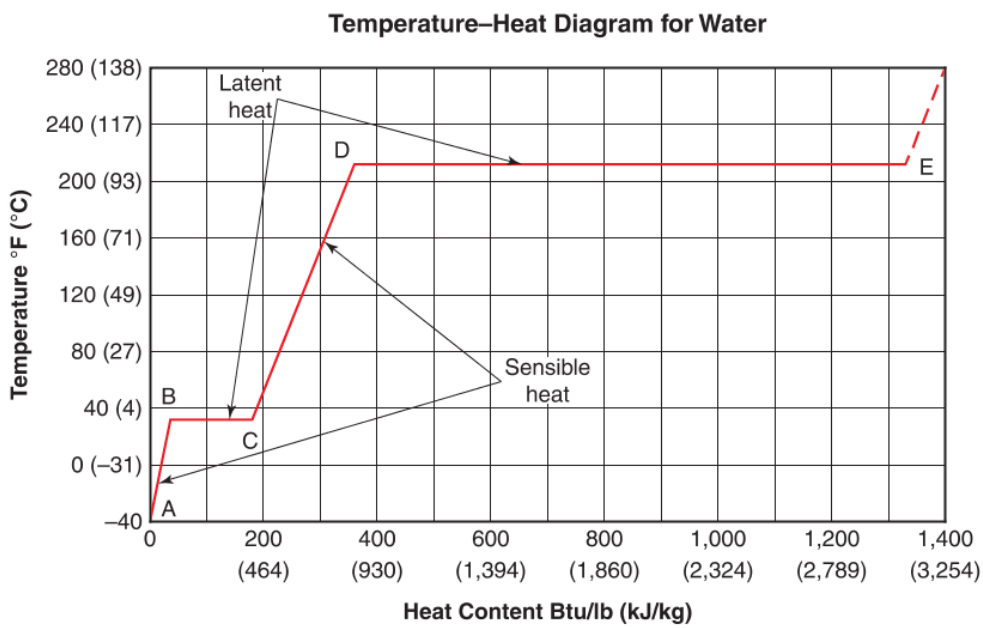

Goodheart-Willcox Publisher

Figure 4-11. A temperature-heat diagram for water. From A to B, 36 Btu/lb were added to heat the ice to 32°F. From B to C, 144 Btu/lb were added to melt the ice, but the temperature did not change. From C to D, 180 Btu/lb were added to heat the water from 32°F to 212°F. From D to E, 970 Btu/lb were added to vaporize the water, but the temperature did not change. The heat added after point E increases the temperature of the steam, as shown by the dotted line.

Copyright Goodheart-Willcox Co., Inc.

Latent Heat of Common Substances		
Substance	Latent Heat of Vaporization	
	Btu/lb	kJ/kg
Water (R-718)	970	2257
R-717 (Ammonia)	589	1371
R-40 (Methyl chloride)	184	428
R-12	72	167
R-22	101	234
R-134a	93	216
R-404A	87	202
R-410A	117	275

Goodheart-Willcox Publisher

Figure 4-12. This table shows the latent heat of vaporization of water and some common refrigerants at their normal boiling points under atmospheric pressure. The latent heat of fusion is not given, as refrigerants do not freeze at temperatures commonly handled by HVACR technicians. A more extensive list of substances and their latent heat values is available in the *Appendix*.

Two important sensible heat measurements that HVACR technicians use often are *superheat* and *subcooling*. Superheat is the difference in temperature between a vapor and its condensation point. For example, in the graph in **Figure 4-11**, once the liquid water has been completely vaporized at Point E, the addition of heat increases its temperature. The higher its temperature, the more superheated the vapor becomes.

To calculate a vapor's superheat, subtract its measured temperature from its condensation point temperature. In the case of water at atmospheric pressure, this is 212°F (100°C). Thus, if water vapor has a temperature of 240°F at atmospheric pressure, then its superheat value is 28°F (240°F – 212°F = 28°F).

Subcooling is similar to superheat in that it measures the difference in temperature between a liquid and its boiling point. In **Figure 4-11**, water is subcooled between Points C and D. To determine a liquid's subcooling, calculate the difference between its measured temperature and its boiling point. For example, if water at atmospheric pressure has a temperature of 150°F, then it has a subcooling value of 62°F (212°F – 150°F = 62°F).

Understanding how to calculate superheat and subcooling is critical to determining whether an air conditioning or refrigeration system is working properly and has the proper amount of refrigerant. More information on superheat and subcooling will be covered in more detail in later chapters.

4.7 Measuring Refrigeration Effect

The ability of a refrigeration system to remove heat can be measured in a variety of ways. The following sections explain the different units that can be used to express the rate at which a refrigeration system removes heat. The sections also explain how to convert between the different units.

4.7.1 Ton of Refrigeration Effect

The cooling capacity of older refrigeration units is often indicated in "tons of refrigeration." A ***ton of***

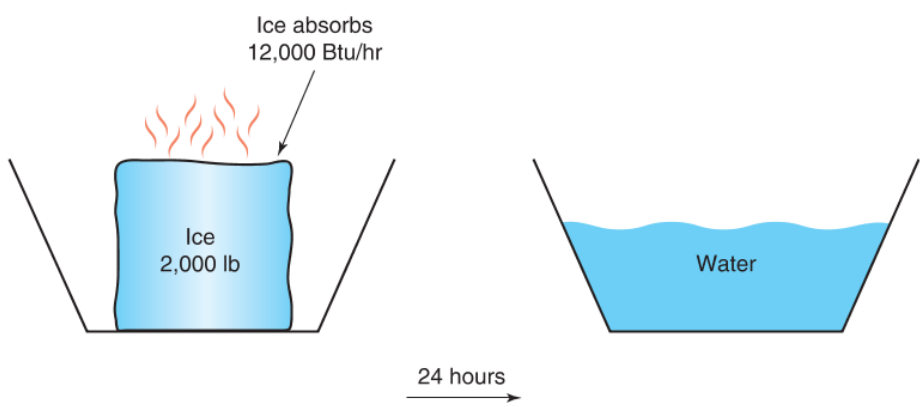

Goodheart-Willcox Publisher

Figure 4-13. Ice absorbs heat from its surroundings as it melts. The amount of heat absorbed to melt 1 ton of ice in 24 hours is referred to as a ton of refrigeration.

Copyright Goodheart-Willcox Co., Inc.

refrigeration represents the amount of heat energy absorbed when a ton (2000 lb) of ice melts during one 24-hour day, **Figure 4-13**. The ice is assumed to be a solid at 32°F (0°C) initially and assumed to be entirely water at 32°F (0°C) at the end of the 24-hour period.

4.7.2 US Customary Units for Measuring Refrigeration Effect

Today, refrigeration systems are often rated in Btu/hr instead of tons. The Btu equivalent of one ton of refrigeration is easy to calculate. Multiply the mass (weight) of one ton of ice (2000 lb) by the latent heat of fusion (melting) of ice (144 Btu/lb). Then, divide the product by 24 hours to obtain Btu/hr.

Unit equivalents:

$$\text{One ton of refrigeration effect} = \frac{2000\text{ lb} \times 144\text{ Btu/lb}}{24\text{ hrs}}$$

Start by solving the equations above the fraction bar (2000 lb × 144 Btu/lb):

$$1\text{ ton} = \frac{288{,}000\text{ Btu}}{24\text{ hrs}}$$

Then, divide the two values remaining (288,000 Btu ÷ 144 Btu/lb):

$$1\text{ ton} = 12{,}000\text{ Btu/hr}$$

If, on the other hand, the Btu/hr capacity of the system is known, you can find the equivalent tonnage rating by dividing the capacity by 12,000 Btu/hr.

Example:

What will be the ton rating of a refrigeration system capable of absorbing 1,728,000 Btu in 24 hours?

Solution:

$$\text{Refrigeration effect} = \frac{1{,}728{,}000\text{ Btu/24 hours}}{12{,}000\text{ Btu/hr}}$$

Start by solving how many Btu are removed per hour (1,728,000 Btu ÷ 24 hours):

$$= \frac{72{,}000\text{ Btu/hr}}{12{,}000\text{ Btu/hr}}$$

Divide the remaining values to determine the tonnage (72,000 Btu/hr ÷ 12,000 Btu/hr):

$$= 6\text{ tons of refrigeration effect}$$

Example:

What is the hourly Btu heat absorbing capacity of a 1/2-ton refrigeration system?

Solution:

$$\text{Refrigeration effect} = 0.5\text{ ton} \times 12{,}000\text{ Btu/hr}$$
$$= 6000\text{ Btu/hr}$$

4.7.3 SI Derived Units for Measuring Refrigeration Effect

Refrigeration effect can be expressed with units derived from the SI system. You can calculate the SI equivalent of a ton of refrigeration effect by multiplying the mass of the ice in kilograms by the latent heat of fusion of ice in kilojoules per kilogram. This gives you the total amount of heat absorbed to melt the ice. If you divide this total by the length of time required to melt the ice in seconds, the result is the SI equivalent of a ton of refrigeration effect.

Example:

What is the refrigeration effect in kilowatts of a refrigeration system with a 1 ton capacity?

Solution:

$$\text{Refrigeration effect} = \frac{m \times h}{t}$$

where

h (for water) = 335 kJ/kg
1 ton = 907 kg
24 hr = 86,400 s

$$\text{Refrigeration effect} = \frac{907\text{ kg} \times 335\text{ kJ kg}}{86{,}400\text{ s}}$$

Start by solving the equations above the fraction bar (907 kg × 335 kJ kg):

$$= \frac{303{,}845\text{ kJ}}{86{,}400\text{ s}}$$

Divide the remaining values to determine the tonnage (303,845 kJ ÷ 86,400 s):

$$= 3.5\text{ kJ/s} = 3.5\text{ kW}$$

Unit equivalents:

1 ton refrigeration effect	=	12,000 Btu/hr
1 ton refrigeration effect	=	3.5 kW

Copyright Goodheart-Willcox Co., Inc.

Chapter Review

Summary

- There are two basic systems of measurement: US Customary and SI. Both are important to know for HVACR work, depending on geographic location.
- Matter exists in three states: solid, liquid, and gas. Energy is the ability to perform work or the ability to cause a change in matter.
- The weight of a substance is a measurement of the force of gravity acting on the substance. On earth, a substance's weight is equal to its mass. The density of a substance is calculated by dividing the mass of the substance by its volume.
- The specific gravity of a substance is the ratio of the substance's density to the density of water. Relative density is the ratio of a gas's density to that of hydrogen.
- Force is energy applied to matter that causes a change in the matter's velocity. Work is the application of force through a distance. Power is the rate at which work is performed.
- Temperature is the heat intensity of a substance. It is commonly measured using the Fahrenheit or Celsius temperature scales.
- The amount of heat energy required to raise the temperature of 1 lb of a substance by 1°F or 1 kg of a substance by 1K is a substance's specific heat capacity.
- Enthalpy is the total heat energy a substance contains, measured from an accepted reference temperature.
- Heat can be transferred through radiation, conduction, convection, or a combination of all three methods. Heat always flows from a warmer substance to a cooler substance.
- A solid has a definite shape and volume. A liquid has a definite volume, but its shape can change to conform to its container. A gas does not have a definite volume or a definite shape.
- Latent heat is heat absorbed or released as a substance changes state. Latent heat has no effect on the temperature of a substance. Sensible heat is the heat energy absorbed or released to change the temperature of a substance.
- One ton of refrigeration effect provides cooling equivalent to melting a ton of ice over a 24-hour period. The ton unit is equivalent to 12,000 Btu/hr.

Review Questions

Write your answers on a separate sheet of paper. Do not write in this book.

1. The two main classifications of energy are _____.
   A. force and power
   B. matter and electricity
   C. positive and negative
   D. potential and kinetic
2. The law of conservation of energy states that _____.
   A. energy can be changed from one form to another
   B. energy cannot be created
   C. energy cannot be destroyed
   D. All of the above.
3. _____ is the rate at which work is performed.
   A. Energy
   B. Force
   C. Power
   D. Weight
4. Temperatures measured on the _____ scale can be converted to Fahrenheit temperatures by subtracting 460°F.
   A. Celsius
   B. Kelvin
   C. Centigrade
   D. Rankine
5. The _____ of a substance is the amount of heat added or released to change the temperature of 1 lb of the substance by 1°F or 1 kg of the substance by 1K.
   A. enthalpy
   B. latent heat content
   C. sensible heat coefficient
   D. specific heat capacity
6. Enthalpy is the _____.
   A. best means of transferring heat
   B. heat required to change a substance from a liquid to a gas
   C. heat required to change a substance from a solid to a liquid
   D. total amount of heat in a substance, calculated from an accepted reference temperature

Copyright Goodheart-Willcox Co., Inc.

7. _____ is the method by which heat is transferred from one substance to another through a circulating medium, such as air or water.
   A. Conduction
   B. Convection
   C. Enthalpy
   D. Radiation
8. Heat energy can be categorized as latent heat and _____ heat.
   A. active
   B. kinetic
   C. potential
   D. sensible
9. Latent heat is heat added to a substance that _____.
   A. causes the substance to change state
   B. has no effect whatsoever on the substance
   C. raises the temperature of the substance
   D. raises the temperature of the substance and causes it to change state
10. The density of a substance is defined as the mass of the substance _____.
    A. divided by the force of gravity
    B. divided by its volume
    C. multiplied by the force of gravity
    D. multiplied by its volume
11. The weight of a substance is defined as the _____.
    A. force of gravity acting on the substance
    B. density of the substance divided by its mass
    C. density of the substance multiplied by its mass
    D. number of molecules of the substance divided by its density
12. If a substance has a specific gravity less than 1.0, it means that the substance is _____.
    A. denser than water
    B. a gas, not a liquid
    C. less dense than water
    D. not affected by gravity
13. Objects that float on water have a _____.
    A. high superheat value
    B. greater specific volume than water
    C. specific gravity greater than 1
    D. specific gravity less than 1
14. Relative density is defined as the ratio of the mass of a certain volume of a gas as compared to the mass of an equal volume of hydrogen. Knowing this concept and that density is mass per volume, a heavy gas would then have a relative density _____.
    A. equal to 1
    B. greater than 1
    C. less than 1
    D. None of the above.
15. A ton of refrigeration effect is defined as the _____.
    A. amount of heat energy absorbed when a ton of ice melts during one 24-hour day
    B. amount of heat energy absorbed when a ton of water at 68°F evaporates
    C. cooling capacity of a system charged with a ton of R-134a refrigerant
    D. cooling capacity required to completely freeze a ton of 68°F water in one hour

Copyright Goodheart-Willcox Co., Inc.

CHAPTER 5 Gases

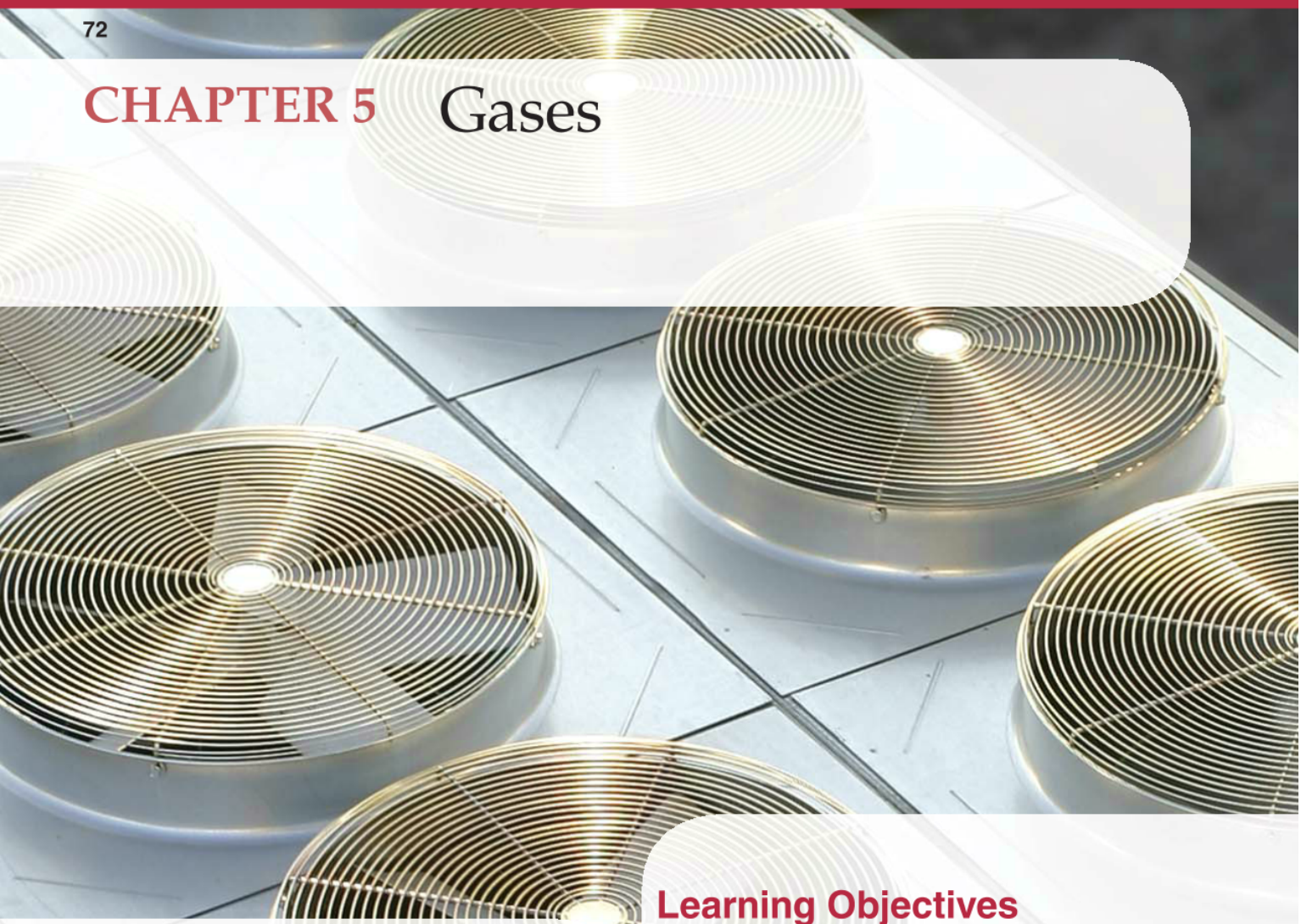

Chapter Outline

5.1 Volume
5.2 Pressure
- 5.2.1 Pascal's Law
- 5.2.2 Relationship of Pressure to Volume and Heat
- 5.2.3 Effect of Pressure on State Changes in Matter
- 5.2.4 Measuring Pressure

5.3 Gas Laws
- 5.3.1 Boyle's Law
- 5.3.2 Charles' Law
- 5.3.3 Gay-Lussac's Law
- 5.3.4 Combined Gas Law
- 5.3.5 Avogadro's Law and the Ideal Gas Law
- 5.3.6 Dalton's Law

5.4 Saturated Vapor
5.5 Basic Processes That Provide Cooling Effect
- 5.5.1 Air Exchange
- 5.5.2 Pressure Change
- 5.5.3 State Change

Learning Objectives

Information in this chapter will enable you to:

- Describe the effect on gas pressure and temperature when its volume is increased or decreased.
- Describe Pascal's law and provide examples of it in the HVACR industry.
- Illustrate the effect of pressure and heat on the three states of matter.
- Differentiate between gauge pressure and absolute pressure.
- Understand how the concepts of Boyle's law, Charles' law, Gay-Lussac's law, and the combined gas law explain the behavior of refrigerant in the operation of a mechanical refrigeration system.
- Describe Dalton's law and explain how it can be applied to HVACR work.
- Explain the significance of saturated vapors in a refrigeration system.
- Describe how the processes of air exchange, pressure change, and state change provide a cooling effect.

Technical Terms

adiabatic compression
atmosphere
Avogadro's law
bar
Boyle's law
Charles' law
combined gas law
critical pressure
critical temperature
Dalton's law
Gay-Lussac's law
heat of compression
partial vacuum
pascal
Pascal's law
perfect vacuum
pressure
saturated vapor
torr

Review of Key Concepts

Reviewing these concepts from earlier chapters will help you understand new concepts presented in this chapter:

- Heat is a form of energy that causes the motion of atoms. Cold means low temperature or lack of heat. Temperature is a measure of the heat intensity or heat level of a substance. Enthalpy is the total amount of heat in a substance. (Chapter 4)
- The two most common temperature scales are the Fahrenheit scale (US Customary) and the Celsius scale (SI system). Ambient temperature is the temperature of the air surrounding an object. (Chapter 4)
- An absolute temperature scale is a temperature scale that uses absolute zero as its starting point. There are two absolute temperature scales: Rankine (Fahrenheit absolute) and Kelvin (Celsius absolute). (Chapter 4)
- The three methods of heat transfer are radiation, conduction, and convection. (Chapter 4)
- Matter has three physical states: solid, liquid, and gas. The physical state of a substance is determined by applied pressure and temperature. (Chapter 4)
- Latent heat brings about a change of state with no change in temperature. Sensible heat causes a change in the temperature of a substance. Superheat is the difference between a vapor's temperature and its condensation point. Subcooling is the difference between a liquid's temperature and its boiling point. (Chapter 4)
- Evaporation is a process that absorbs heat into the evaporating substance. Condensation is a process that releases heat from a condensing substance. (Chapter 4)

Introduction

The previous chapter introduced some basic science concepts related to temperature and heat. This chapter provides additional foundational knowledge of scientific concepts, focusing on the behavior of gases.

Refrigeration systems function by continuously changing the phase of a refrigerant from liquid to gas and then back to liquid. One phase change absorbs heat while the other releases heat. By controlling the location where these phase changes occur, heat is transferred from one location to the other using the refrigerant as the transport medium.

Video

- Combined Gas Law

5.1 Volume

Volume is the physical space that a substance occupies. In most cases, solids and liquids are practically noncompressible. This means that solids and liquids have a specific volume that can be measured. On the other hand, gases do not have a fixed volume. Gases expand to fill whatever container they are in.

As a substance is heated, its volume tends to increase due to expansion, which is caused by the increased motion in the substance's molecules. When a substance cools, its molecules slow down, and its volume tends to decrease due to contraction.

If a gas is in a sealed container of a fixed volume, it can only expand a certain amount until it completely fills the container. When the gas completely fills its container and cannot expand further, any additional energy put into the gas results in increases in pressure and temperature.

5.2 Pressure

The operation of a refrigeration system depends mainly on pressure differences in the system. ***Pressure*** is force per unit of area. It is expressed in pounds per square inch (psi). Pounds are the force, and inches are the area. Pressure is also expressed in pascals (Pa) or kilopascals (kPa) in the SI system. A ***pascal*** is a newton per square meter (N/m^2). Recall that the newton is the SI unit of force.

Substances always push on the surfaces of their containers or supports. A solid exerts a pressure on its support. If the support were removed, the solid would fall to another supporting level. A liquid exerts pressure on the sides and the bottom of its container and the air above it. A gas expands to completely fill its container and exerts a pressure on all surfaces of its container.

A solid weight of 1 lb with a bottom surface area of 1 in^2 exerts a pressure of 1 pound per square inch (1 psi) on a flat surface. Liquid in a container exerts an increasing pressure on the sides and bottom of its container as the liquid depth increases. The pressure of gas in a container depends on the quantity and temperature of the gas. As the quantity or temperature of the gas increases, so does the pressure.

Formula for calculating pressure:

$$P = \frac{F}{A}$$

where

P = pressure (psi or Pa)
F = force (lb or N)
A = area on which the force is acting (in^2 or m^2)

Example:

Determine the pressure generated when 250 lb of force is applied over an area of 10 in^2.

Solution:

$$P = \frac{F}{A}$$

$$P = \frac{250 \text{ lb}}{10 \text{ in}^2}$$

$$P = 25 \text{ psi}$$

As shown by the pressure formula, if force increases and area remains the same, pressure will increase. If force remains the same but area increases, pressure will decrease.

If the force value in the previous example was increased to 500 lb and area remained 10 in^2, pressure would increase to 50 psi. If the force remained at 250 lb but area increased to 25 in^2, pressure would decrease to 10 psi. See **Figure 5-1**.

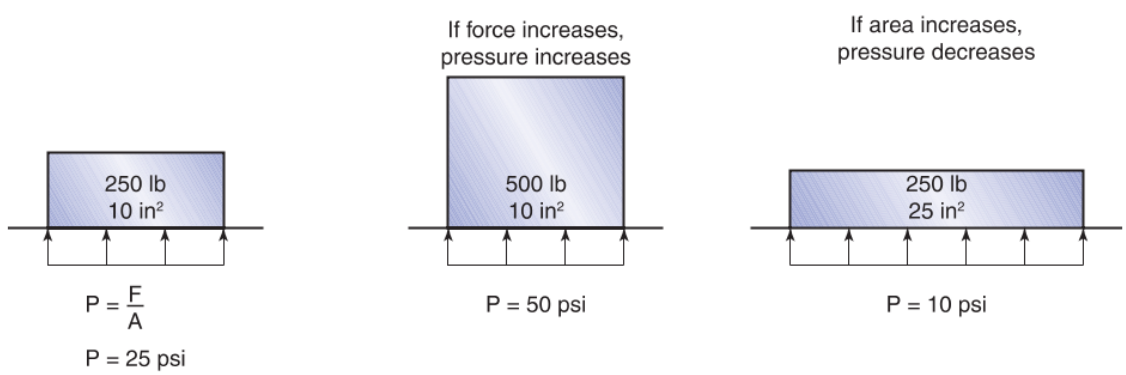

Goodheart-Willcox Publisher

Figure 5-1. This illustration shows how a change in force or area affects pressure. Increasing force increases pressure. Increasing area decreases pressure.

Copyright Goodheart-Willcox Co., Inc.

5.2.1 Pascal's Law

The pascal unit of pressure is named in honor of the French mathematician and scientist Blaise Pascal, whose work revolutionized the study of hydraulics. ***Pascal's law*** states that pressure applied upon a confined fluid is transmitted equally and undiminished in all directions. A fluid is any substance whose molecules move freely past each other. This includes both liquids and gases.

Figure 5-2 illustrates Pascal's law. A piston is fitted into a small cylinder connected to a fluid-filled container. A force of 60 psi (415 kPa) is applied to the piston in the small cylinder. The pressure gauges show the pressure being transmitted equally in all directions.

5.2.2 Relationship of Pressure to Volume and Heat

Pressure, volume, and heat are interrelated. As energy is added to a substance, it may cause the volume of the substance to increase, the temperature of the substance to increase, the pressure of the substance to increase, or a combination of these. These three variables are especially important to gases and liquids. They explain the behavior of refrigerants in an HVACR system. If temperature increases and volume is held constant, pressure increases. If temperature increases and pressure is held constant, volume increases.

As a gas is compressed into a smaller volume (as in a compressor), its pressure and temperature rise. This is due to the work (energy) added to the gas by compression. The energy added is often termed the ***heat of compression***. When a gas is compressed without gaining heat from or losing heat to its surroundings, it is called ***adiabatic compression***. Adiabatic compression results in a rapid increase in temperature because the heat of compression is not lost to surrounding materials. A common example of compression that is nearly adiabatic is the compression stroke of a piston in a gasoline engine. The piston compresses the mixture of gasoline and air quickly enough that heat cannot leave the mixture, causing the temperature of the fuel mixture to rise. In refrigeration systems, a compressor performs a similar function, which will be discussed in later chapters.

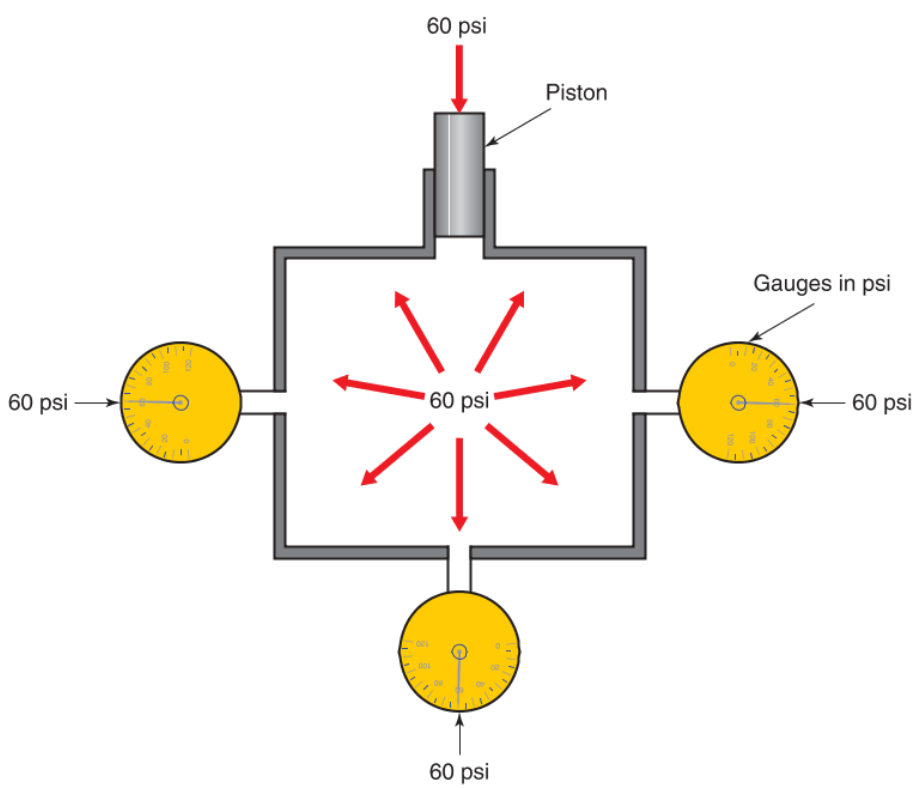

Goodheart-Willcox Publisher

Figure 5-2. This drawing illustrates Pascal's law. A pressure of 60 psi (515 kPa) is pressing against all walls of the container. All gauges have the same reading, indicating that the pressure is distributed equally throughout the fluid in the container.

Copyright Goodheart-Willcox Co., Inc.

5.2.3 Effect of Pressure on State Changes in Matter

The temperature at which a substance changes its physical state (solid, liquid, gas) depends on the pressure acting on the substance. The higher the pressure is, the higher the temperature needed to bring about a state change. If the pressure applied to liquid water is raised, the temperature at which it will vaporize into steam is also going to be higher than normal.

Why does higher pressure require a higher temperature for liquid to vaporize? An increase in pressure pushing down on the water molecules forces the water molecules to gain more energy in order to expand and separate from each other. The reverse is also true. If the pressure is lowered, the temperature at which the change of state takes place is also lowered. Water under low pressure will boil at a lower temperature because it is easier for the water molecules to separate with less pressure pushing down on them. This principle is used to evacuate moisture from a refrigerant circuit. A vacuum pump lowers the pressure, which causes moisture to vaporize and be drawn out of the circuit. This pressure on state changes relationship is shown in **Figure 5-3**.

The ***critical temperature*** of a substance is the highest temperature at which the substance may be liquefied, regardless of the pressure applied to it. At temperatures above the critical temperature, the substance will always be in a gaseous state. For water, the critical temperature is around 705°F (374°C). This means that if water vapor is heated to above 705°F, then it cannot be turned back into liquid water no matter how much pressure is applied to it. It can only return to liquid state if its temperature is dropped to or below 705°F (374°C). The *Appendix* lists critical temperatures for common substances and refrigerants.

The ***critical pressure*** of a substance is the pressure at which the gaseous form of the substance liquefies when the substance is at its critical temperature. When a gas is at its critical temperature, any pressure less than the critical pressure causes the substance to remain in gaseous form.

Pressure also affects the change between liquid and solid states of matter. Generally, increasing pressure increases the temperature at which a substance changes

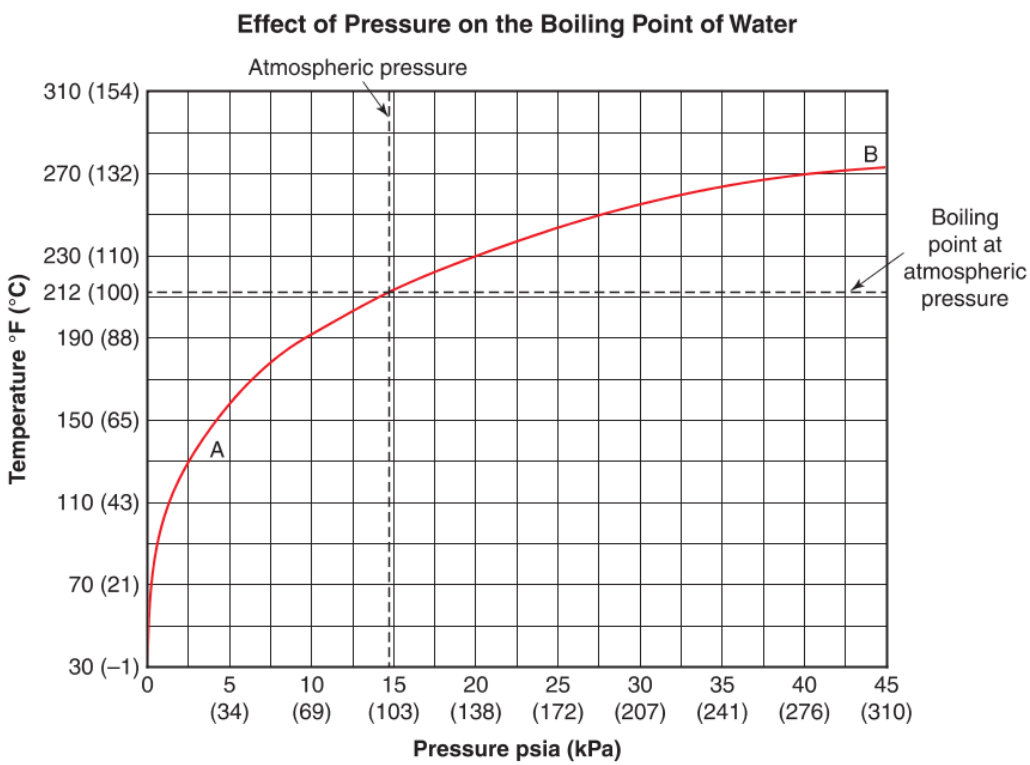

Goodheart-Willcox Publisher

Figure 5-3. The pressure-temperature curve for water is shown here. At atmospheric pressure, water boils at 212°F (100°C). At point A, with a vacuum of 3 psia (20 kPa), water boils at 142°F (62°C). Increasing pressure above atmospheric level raises the boiling point temperature. At point B, which is at a pressure of 45 psia (311 kPa), water's boiling point is raised to 271°F (133°C). Higher pressure requires higher temperature for boiling. Lower pressure requires lower temperature for boiling.

Copyright Goodheart-Willcox Co., Inc.

between solid and liquid. The melting point of water is a special case. Increasing the pressure on water *lowers* the freezing temperature. Decreasing the pressure raises the freezing temperature. **Figure 5-4** shows this relationship.

Water's pressure and state of change relationship is the opposite of the general rule stated at the beginning of this section. This occurs because water expands when it freezes. Most substances expand when they melt, and for them, the higher the pressure, the higher the melting temperature.

Refrigeration systems use the effect of reduced pressure to lower the boiling point of refrigerants inside the system. Consider the refrigerant R-134a. It boils under atmospheric pressure (15 psia or 100 kPa) at –15°F (–26°C). If the pressure is lowered to 9 psia (62 kPa), the boiling temperature is lowered to –35°F (–37°C). **Figure 5-5** shows the effect of pressure change on the evaporating temperature of three substances used in refrigeration work.

Evaporating Temperatures at Different Pressures			
Substance	Pressure		
	8.7 psia	14.7 psia	29 psia
Water	192.2°F	212°F	251.6°F
R-12	–41.8°F	–20.2°F	14°F
R-717 (ammonia)	–40°F	–36.4°F	–0.39°F

Goodheart-Willcox Publisher

Figure 5-5. This chart shows the effect of pressure on the evaporating temperatures of three fluids used in refrigeration work.

5.2.4 Measuring Pressure

Atmospheric pressure is expressed in pounds per unit of area, inches of liquid column height, or in atmospheres. In addition to the different units of pressure, pressure measurements may be made using a perfect vacuum as the zero point (absolute pressure) or using atmospheric pressure at sea level as the zero point (gauge pressure). The most popular gauges are those that register in pounds per square inch above atmospheric pressure (psig or psi).

Gauge Pressure and Absolute Pressure Scales

A reading of 0 psi on the gauge pressure scale is equal to atmospheric pressure, which is about 14.7 psia at sea level (although 15 psia is often used as an approximate). This pressure value may also be referred to as one atmosphere. Pressure above atmospheric pressure registers on this type of gauge. For example, a gauge pressure of 5 psig would be equal to an absolute pressure of 19.7 psia (5 psi + 14.7 psi).

Absolute pressure scales register zero when pressure cannot be further reduced. A ***perfect vacuum*** is

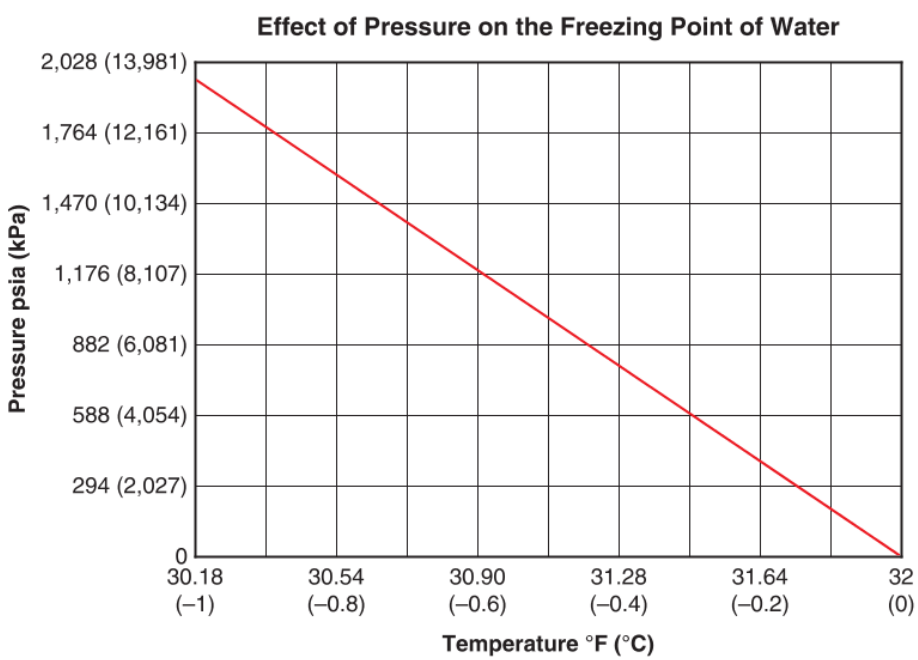

Goodheart-Willcox Publisher

Figure 5-4. This chart shows the effect of pressure on the freezing point temperature of water.

Copyright Goodheart-Willcox Co., Inc.

0 pounds per square inch absolute (0 psia). In solving most pressure and volume problems, it is necessary to use absolute pressures (psia). Absolute pressure is gauge pressure plus atmospheric pressure: 14.7 psi + psig = psia.

Pro Tip

Pressure Units

It is important that a technician recognize whether values are expressed in absolute pressure or gauge pressure units. If the value is followed by *psi* or *psig*, the value is referring to gauge pressure. If the value is followed by *psia*, the value is referring to absolute pressure.

Example:

Calculate absolute pressure when the pressure gauge reading is 21 psi.

Solution:

absolute pressure = gauge pressure + atmospheric pressure
= 21 psig + 14.7 psia
= 35.7 psia

Perfect and Partial Vacuums

As already mentioned, a perfect vacuum is a pressure that cannot be reduced any further. A perfect vacuum is used as the zero point for measuring absolute pressures. A ***partial vacuum*** is any pressure below atmospheric pressure (14.7 psia).

Units for Pressure Measurement

Pressure measurements are often made using the familiar psi unit. However, there are numerous other units available for measuring pressure under certain circumstances. These alternative units include inches of mercury (in. Hg), feet or inches of water column, torrs, bars, atmospheres, pascals, and kilopascals. The following sections introduce these units and explain why they might be used.

Inches of Mercury

In the US Customary system, pressure above atmospheric pressure is generally measured in pounds per square inch (psi). Pressure below atmospheric pressure is measured in inches of mercury column.

A simple mercury-column pressure gauge consists of an open reservoir of mercury and a vertical tube that is sealed at one end. The open end of the tube is submerged into the reservoir of mercury, which is exposed to atmospheric pressure. The closed end of the tube contains a vacuum. The weight of the atmosphere pushes down on the mercury in the reservoir, forcing it up the tube. Since the sealed end of the tube contains a vacuum, there is no air pressure pushing back down on the column of mercury. The barometer in **Figure 5-6** is a mercury gauge that works on this principle.

The distance the fluid climbs in the tube depends on the density of the liquid and the atmospheric pressure. Under standard conditions, which are 68°F (20°C) and 14.7 psia (101.3 kPa), a mercury column will measure 29.92″ high.

It is often necessary to convert inches of mercury into pounds per square inch absolute (psia) or other units. Formulas are available for making accurate conversions; however, the chart shown in **Figure 5-7** makes converting easy. From this chart, you can see that 2 in. Hg roughly equals 1 psia.

Inches or Feet of Water Column

Low levels of air pressure or a vacuum can be measured with a column of water instead of mercury. A column of 29.92 in. Hg is equal to a water column about 34′ high. The height is greater because water is so much lighter (less dense) than mercury.

Water columns are usually designed for measuring small pressures above or below atmospheric pressure. These pressure measuring devices are called manometers. They are calibrated in inches of water

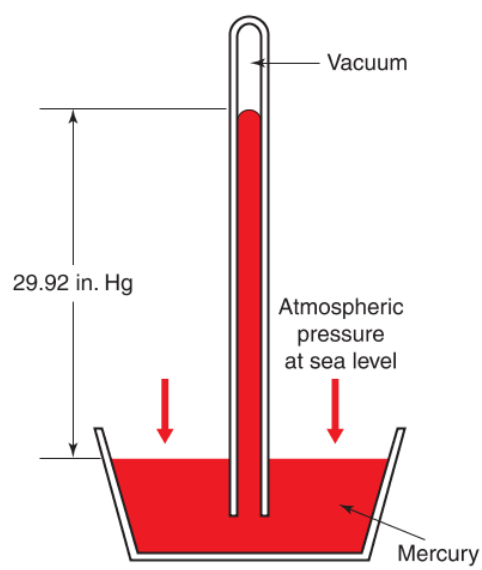

Goodheart-Willcox Publisher

Figure 5-6. This drawing shows the principle of a mercury barometer. It consists of a glass tube closed at one end and filled with mercury. The open end is sealed and the tube is inverted into a reservoir of mercury. When the seal is removed, the mercury in the tube drops to a level corresponding to atmospheric pressure. Note: Mercury is a hazardous material. Do not work directly with mercury.

Copyright Goodheart-Willcox Co., Inc.

Conversion Chart for Vacuum Pressure Values			
Inches of Hg	mm of Hg	psia	Ft of Water
30		15	
29.92	760	14.7	33.4
29		14.5	
28	711	14	32.2
27		13.5	
26	660	13	29.9
25		12.5	
24	610	12	27.6
23		11.5	
22	559	11	25.3
21		10.5	
20	508	10	23.0
19		9.5	
18	457	9	20.7
17		8.5	
16	408	8	18.4
15		7.5	
14	356	7	16.1
13		6.5	
12	305	6	13.8
11		5.5	
10	254	5	11.5
9		4.5	
8	203	4	9.2
7		3.5	
6	152	3	6.9
5		2.5	
4	102	2	4.6
3		1.5	
2	51	1	2.3
1		0.5	
0	0	0	0

Goodheart-Willcox Publisher

Figure 5-7. This chart lists equivalent values for inches of mercury, millimeters of mercury, pounds per square inch absolute (psia), and feet of water for vacuum pressures.

column. **Figure 5-8** shows how a water manometer can be used for determining pressure in air ducts and gas lines. A water column 2.3′ high (or about 28″) equals 1 psi.

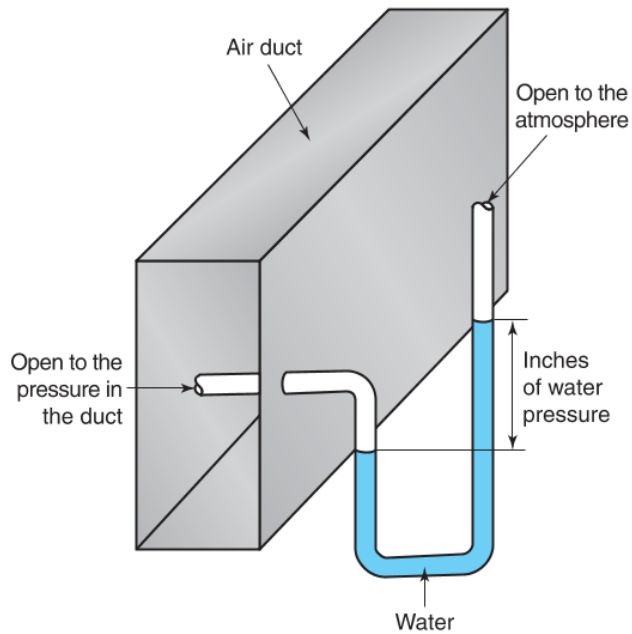

Goodheart-Willcox Publisher

Figure 5-8. A water manometer is used to measure low pressure in air ducts and gas lines. Pressure is indicated in inches of water. It is measured by the difference in water level between the two branches of the tube.

Torrs, Bars, and Millibars

The ***torr*** is a unit of measure that has been devised for measuring high vacuums (pressure close to an absolute vacuum). The unit is named after the man who invented the mercury barometer, Evangelista Torricelli. One torr equals a pressure of 1 mm of mercury (mm Hg), or 1/760 of an atmosphere, almost a perfect vacuum. A ***bar*** is 14.5 psia, which is nearly equal to one atmosphere (14.7 psia). A millibar (mb) is equal to 0.001 bar, **Figure 5-9**.

Ritchie Engineering Co., Inc. – YELLOW JACKET Products Division

Figure 5-9. Vacuum gauges using torr, in. Hg, and mbar units.

Copyright Goodheart-Willcox Co., Inc.

Atmospheres

In some high-pressure refrigerating machines, pressure gauges are calibrated in atmospheres. An ***atmosphere*** is approximately 14.7 pounds per square inch absolute (psia), which is frequently rounded to 15 psia. Two atmospheres roughly equals 30 psia. Three atmospheres roughly equals 45 psia.

Pascals and Kilopascals

In SI units, atmospheric pressure is expressed in kilopascals (kPa). **Figure 5-10** compares pressures in US Customary and SI units. From this chart, you can see that kilopascals measure absolute pressure. This means that 0 kilopascals equates to a perfect vacuum.

The pascal, rather than the kilopascal, is used for measuring high vacuums (pressures close to an absolute vacuum). Normal atmospheric pressure is 101.3 kPa. For practical purposes, gauges are often calibrated at 100 kPa for atmospheric pressure.

Pressure Gauges

A service technician may have to measure both pressure and vacuum in the same system. Therefore, some pressure gauges measure both. These are called compound gauges. A scale on a compound gauge goes up and also down from zero. Going up the scale measures above atmospheric pressure. Going down the scale measures below atmospheric pressure (vacuum). **Figure 5-11** illustrates such a gauge.

In North America, compound gauges do not always have kilopascal scales. As an alternative, these gauges may have a bar scale and include an equation to calculate the kilopascal measurement (bar × 100 = kPa), **Figure 5-12**.

Conversion Chart for Pressure in SI Units		
psia	psig	kPa
105	90	725
90	75	621
75	60	518
60	45	414
45	30	311
30	15	207
15	0	100
10	–5	69
5	–10	35
0	–15	0

Goodheart-Willcox Publisher

Figure 5-10. This table lists equivalent pressures in both US Customary and SI units.

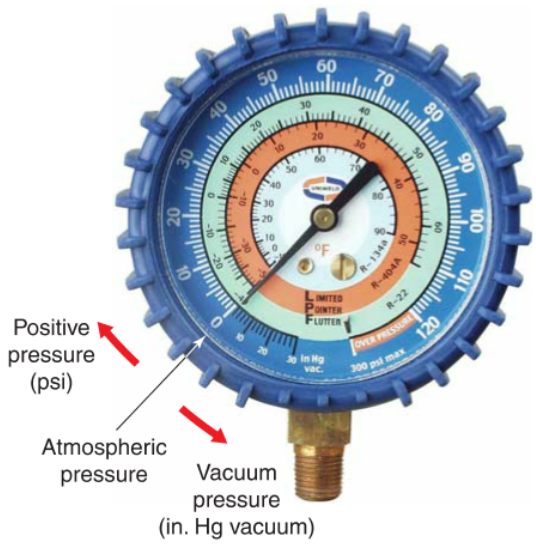

Uniweld

Figure 5-11. Compound gauges, like the one shown here, measure pressures above atmosphere in psi and pressures below atmosphere using units of in. Hg vacuum. On the gauge shown, zero indicates atmospheric pressure.

Ritchie Engineering Co., Inc. – YELLOW JACKET Products Division

Figure 5-12. This compound gauge has a pressure scale for psi and bar. Remember that 1 bar equals 14.5 psia. For SI units, the conversion equation shown allows easy calculating of the kilopascal equivalent.

5.3 Gas Laws

Modern refrigeration systems are based on the principle that refrigerants absorb heat as they turn from a liquid into a vapor and release heat as they change from a vapor back into a liquid. For this reason, it is extremely important that a service technician have a good understanding of the way gases behave. The

Copyright Goodheart-Willcox Co., Inc.

following sections explain some of the physical laws that govern the behavior of gases.

5.3.1 Boyle's Law

Robert Boyle (1627–1691) was one of the first true chemists. He developed ***Boyle's law***, which describes the relationship between the pressure and volume of a gas if the temperature remains constant. Boyle's law states that the volume of a gas varies inversely to the pressure, provided the temperature remains constant. If the pressure of an amount of gas doubles, its volume drops to half of what it was originally. If the gas pressure is reduced in half, the volume doubles. Therefore, if either the pressure or volume is changed (with the temperature held constant), the corresponding volume or pressure is changed inversely in exact proportion.

Formula for Boyle's Law (Temperature Constant):

$$\frac{P_2}{P_1} = \frac{V_1}{V_2}$$

where

P_1 = initial pressure
P_2 = final pressure
V_1 = initial volume
V_2 = final volume

The formula for Boyle's law may not mean much on first look, but the formula can be rearranged to clarify the principles that Boyle's law represents.

$$P \uparrow = V \downarrow$$
$$P \downarrow = V \uparrow$$

These rearranged formulas show the inverse relationship of pressure and volume when temperature is held constant. Boyle's law shows how volume decreases as pressure increases, when temperature remains constant. It also shows the reverse of this: how volume increases as pressure decreases, when temperature remains constant.

5.3.2 Charles' Law

Jacques Charles (1746–1823) was a French scientist who discovered the relationship of temperature and volume of gases. While Boyle experimented with holding temperature constant, Charles experimented with holding pressure constant. Charles' theory was based on the effects of temperature or volume when pressure remained constant.

Charles' law states that with a constant pressure, the volume of a given quantity of gas varies directly to the absolute temperature. This means that if pressure is held constant, the volume of the gas will increase if gas temperature rises, and the volume will decrease if temperature drops.

Formula for Charles' Law (Pressure Constant):

$$\frac{V_1}{T_1} = \frac{V_2}{T_2}$$

where

V_1 = initial volume
V_2 = final volume
T_1 = initial temperature
T_2 = final temperature

The formula for Charles' law may not mean much on first look, but the formula can be rearranged to clarify the principles that Charles' law represents.

$$T \uparrow = V \uparrow$$
$$T \downarrow = V \downarrow$$

These rearranged formulas show the direct relationship of temperature and volume when pressure is held constant. Charles' law shows how volume increases as temperature increases, when pressure remains constant. It also shows the reverse of this: how volume decreases as temperature decreases, when pressure remains constant.

5.3.3 Gay-Lussac's Law

Joseph Louis Gay-Lussac (1778–1850) was a French chemist who discovered the relationship between pressure and temperature when volume is held constant. While Boyle experimented with holding gas temperature constant and Charles experimented with holding gas pressure constant, Gay-Lussac experimented with holding gas volume constant. ***Gay-Lussac's law*** states that at constant volume, the absolute pressure of a given quantity of a gas varies directly with its absolute temperature. In other words, when a gas is held at a constant volume, its pressure and temperature will rise together or will fall together.

Formula for Gay-Lussac's Law (Volume Constant):

$$\frac{P_1}{T_1} = \frac{P_2}{T_2}$$

where

P_1 = initial pressure
P_2 = final pressure
T_1 = initial temperature
T_2 = final temperature

The formula for Gay-Lussac's law may not mean much on first look, but the formula can be rearranged to clarify the principles that Gay-Lussac's law represents.

$$P \uparrow = T \uparrow$$
$$P \downarrow = T \downarrow$$

These rearranged formulas show the direct relationship of pressure and temperature when volume is held constant. Gay-Lussac's law shows how temperature increases as pressure increases, when volume

Copyright Goodheart-Willcox Co., Inc.

remains constant. It also shows the reverse of this: how temperature decreases as pressure decreases, when volume remains constant.

Gay-Lussac's law is extremely important and applicable to compression refrigeration systems. A refrigeration system is divided into the low side and the high side. When the compressor is operating, the low side is under low pressure, and the high side is under high pressure. Since each side of a refrigeration system is essentially a constant volume, Gay-Lussac's law is in effect. In other words, if a refrigerant's pressure is high, its temperature will also be high. On the low side of the system, pressure is low, so the temperature will be low, **Figure 5-13**.

5.3.4 Combined Gas Law

The combined gas law combines the concepts of Boyle's law, Charles' law, and Gay-Lussac's law. It shows the interrelationship of gas pressure, volume, and temperature. The ***combined gas law*** states that the ratio among a gas's pressure, volume, and temperature remains constant. Essentially, this law states that if a gas's temperature increases, its pressure or volume must increase proportionally. If a gas's temperature decreases, its pressure or volume must also decrease.

Formula for Combined Gas Law:

$$\frac{P \times V}{T} = k$$

where

P = pressure
V = volume
T = temperature
k = gas constant

When two of the variables are known, the third can be determined by rearranging the formula. The

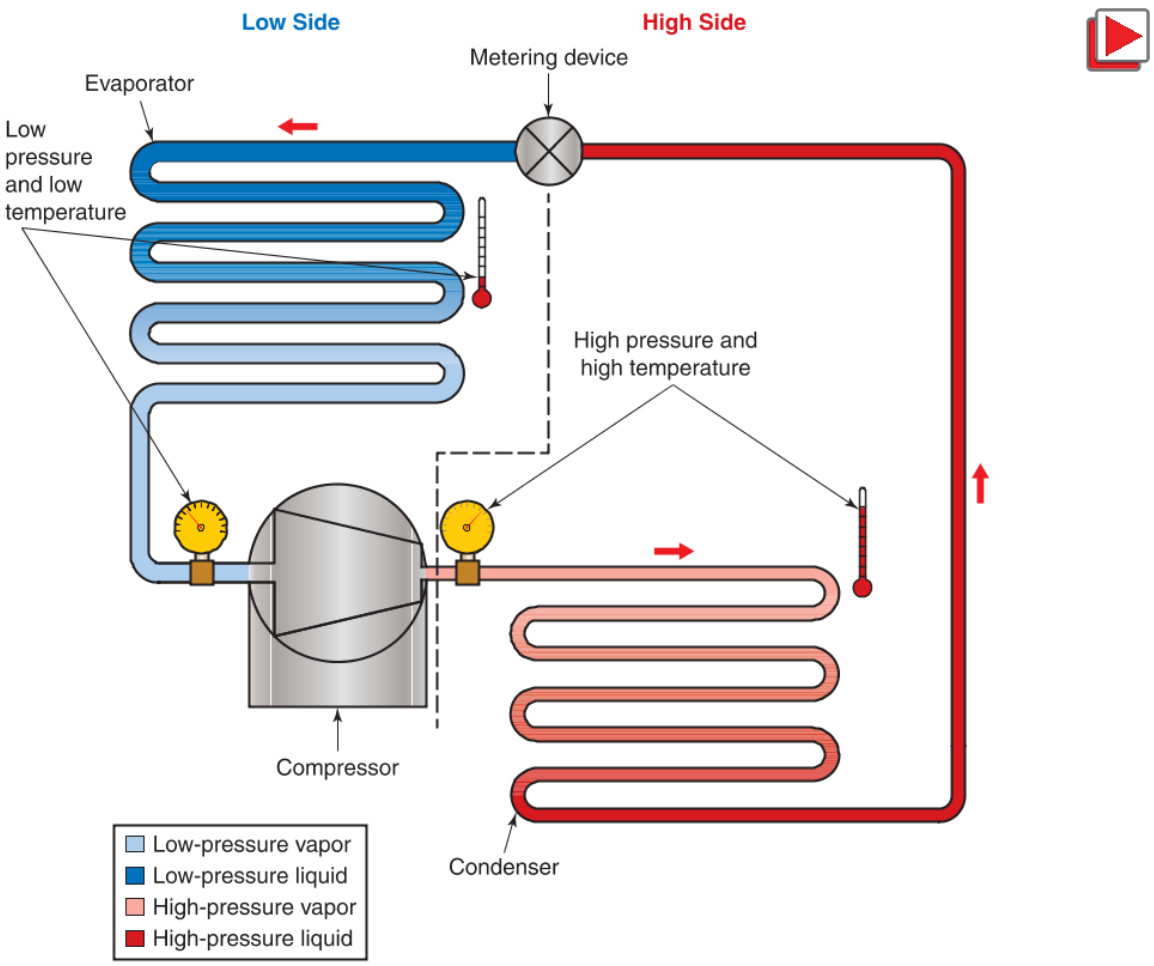

Goodheart-Willcox Publisher

Figure 5-13. The operation of mechanical refrigeration systems are based on the principles of Gay-Lussac's law. In a fixed volume, high pressure corresponds to high temperature, and low pressure corresponds to low temperature.

Copyright Goodheart-Willcox Co., Inc.

combined gas law formula can be arranged to solve for either temperature, pressure, or volume:

$$P = \frac{k \times T}{V}$$

$$V = \frac{k \times T}{P}$$

$$T = \frac{P \times V}{k}$$

There are several ways to use the combined gas law equation and rearrange it for solving different variables. Remember that the ratio among the numbers must remain constant.

$$\frac{P_1 \times V_1}{T_1} = \frac{P_2 \times V_2}{T_2}$$

where

P_1 = initial pressure
P_2 = final pressure
T_1 = initial temperature
T_2 = final temperature
V_1 = initial volume
V_2 = final volume

The principles of Boyle's law, Charles' law, Gay-Lussac's law, and the combined gas law should be remembered throughout this book. Knowing their concepts and how they apply to refrigeration is the key to understanding system operations and being able to troubleshoot and diagnose system problems.

5.3.5 Avogadro's Law and the Ideal Gas Law

Amedeo Avogadro (1776–1856) was an Italian physicist and mathematician. He was the first to theorize that equal volumes of gases at equal pressures and temperatures contain equal numbers of molecules, regardless of the mass of the gases. For example, a million molecules of hydrogen at a given temperature and pressure would occupy the same volume as a million molecules of nitrogen at the same temperature and pressure, even though the nitrogen has fourteen times as much mass. This concept illustrates ***Avogadro's law***.

The combined gas law shows the proportional relationship between temperature, pressure, and volume, but it does not include a variable for the quantity of gas. Avogadro's law can be combined with the combined gas law to create the ideal gas law. The ideal gas law provides a formula for calculating the pressure, temperature, or volume for a known quantity of gas. This formula is used to generate many of the charts and tables used by refrigeration technicians. It is generally used by engineers, rather than technicians.

5.3.6 Dalton's Law

John Dalton (1766–1844) was an English educator who experimented with mixtures of gases rather than one pure gas. Dalton discovered that in a mixture of gases, each gas acts as if it were occupying the space alone. Therefore, ***Dalton's law*** states that to determine the total pressure of a confined mixture of gases, the pressure for each gas involved must be added.

Formula for Dalton's Law:

$$P_1 + P_2 + \ldots + P_N = P_T$$

where

P_T = total pressure
P_1 = pressure of first gas
P_2 = pressure of second gas
$+ \ldots + P_N$ = pressure of all other gases in mixture

Dalton's law is important to HVACR work, because a refrigeration system should ideally contain only gas, which is the refrigerant for that system. However, due to poor service practices, a refrigeration system can become contaminated with air. When this occurs, total pressure within the system is the pressure of the refrigerant charge plus the pressure of the air, **Figure 5-14**. Pressures will no longer correspond with the pressure-temperature (P/T) chart of the refrigerant due to the effect of the air.

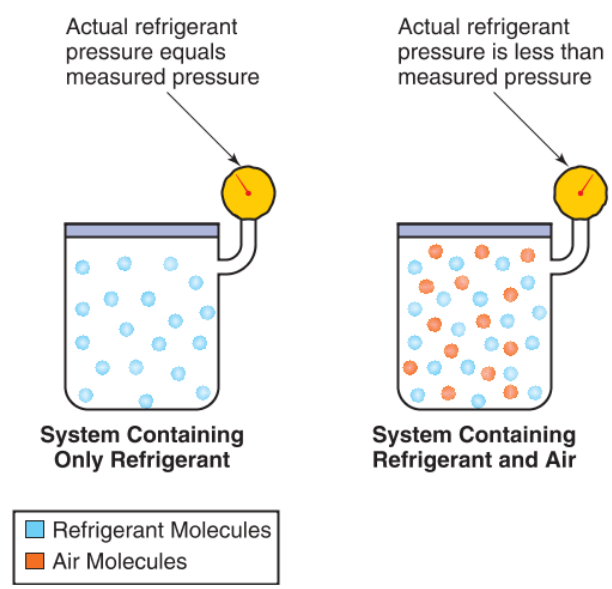

Goodheart-Willcox Publisher

Figure 5-14. When air is present in refrigeration system, the measured pressure of the system is greater than the actual pressure of the refrigerant.

Copyright Goodheart-Willcox Co., Inc.

5.4 Saturated Vapor

The term ***saturated vapor*** indicates a condition of balance on an enclosed quantity of a vaporized fluid. The balance is such that some vapor will condense if there is even the slightest lowering of its temperature or an increase in its pressure.

Saturated vapors are often found where a substance is changing phases. For this reason, saturated vapor is most often found in a refrigeration system's two heat exchangers: the evaporator and the condenser. When a vapor is saturated, there is usually some of that substance also present in liquid form. During refrigeration system operation, the evaporator and condenser each have saturated vapor. In the evaporator, liquid is boiling into vapor. In the condenser, vapor is condensing into liquid.

In a saturated vapor condition, all of the substance has been vaporized that can be vaporized under the existing conditions of pressure and temperature. If more heat is added or if pressure is lowered, more liquid will vaporize. If heat is removed or pressure increased, some vapor will condense. In an evaporator, heat is added, so that the liquid boils into vapor. In a condenser, heat is removed, so vapor condenses into liquid.

5.5 Basic Processes That Provide Cooling Effect

It is important that you understand the underlying science behind refrigeration systems, and it is important to understand how those principles are applied in modern refrigeration systems. The following are the basic methods refrigeration systems use to transfer heat to provide cooling action. Modern refrigeration systems often use a combination of these methods to provide maximum cooling effect.

5.5.1 Air Exchange

In air exchange, heat transfers from warm air to a cooler surface without causing a state change. Heat always flows from a warmer substance to a cooler substance. The heat can be transferred through radiation, conduction, convection, or a combination of these methods. An example of a simple air exchange would be blowing warm air across a set of cold pipes to cool the blowing air.

5.5.2 Pressure Change

The combined gas law points out that the pressure of a gas is directly variable to temperature and inversely variable to its volume. Decreasing the pressure on a gas causes the gas to expand and/or causes its temperature to drop. This phenomenon, along with a state change from liquid to gas, provides the cooling action in a refrigeration system.

5.5.3 State Change

Heat is either absorbed or released when matter changes state. As a solid changes to a liquid or a liquid changes to a gas, heat is absorbed from the surrounding area. Evaporative cooling systems are based on this principle. One simple example of an evaporative cooling system is a desert bag.

A desert bag is made of tightly woven fabric and is filled with drinking water. Since the bag is not waterproof, some water slowly seeps through to the outside. Thus, the outside surface of the bag remains moist. Moisture on the surface of the bag evaporates rapidly. Much of the heat that causes this evaporation comes from the bag and its water. Thus, heat is drawn from the drinking water inside the canvas. This causes the water temperature to drop several degrees below the temperature of the surrounding air.

Copyright Goodheart-Willcox Co., Inc.

Summary

- The volume of a gas is directly related to the temperature of the gas and inversely related to the pressure acting on the gas.
- Pressure is force per unit of area. If the level of force is increased, pressure increases. If the level of area increases, pressure decreases. In US Customary, pressure is generally expressed in pounds per square inch (psi). In SI, pressure is generally expressed in pascals or kilopascals.
- Pascal's law states that pressure applied upon a confined fluid is transmitted equally and undiminished in all directions. This law applies to both liquids and gases.
- The critical temperature of a substance is the highest temperature at which a substance can be liquefied. The critical pressure of a substance is the pressure at which the gaseous form of a substance will liquefy when the substance is at its critical temperature.
- Pressure, volume, and heat are interrelated. If volume is held constant while temperature increases, pressure will increase. If volume is decreased, pressure and temperature rise.
- The higher the pressure is on a substance, the higher the temperature needed to bring about a change of physical state. The reverse is also true. The lower the pressure applied to a substance, the lower the temperature needed to bring about a change of physical state.
- Pressure scales that set zero at atmospheric pressure are referred to as gauge pressure scales. Pressure scales that set zero at a perfect vacuum are referred to as absolute pressure scales.
- Vacuum may be measured in units of inches of mercury, (in. Hg), feet or inches of water column (in H_2O), torrs, bars, millibars, psia, microns, and kilopascals.
- Boyle's law states that if temperature is held constant, volume varies inversely with pressure. Charles' law states that if pressure is held constant, volume varies directly with temperature. Gay-Lussac's law states that if volume is held constant, temperature varies directly with pressure.
- The combined gas law shows the interrelationship of gas pressure, volume, and temperature. It states that the ratio among these variables remains constant. Avogadro's law states that equal volumes of gases at equal pressures and temperatures contained equal numbers of molecules, regardless of the mass of the gases. Dalton's law states that in a confined mixture of gases, the pressure of each gas must be added to calculate the total pressure.
- A saturated vapor describes an enclosed quantity of a vaporized fluid that could condense if heat were removed or pressure increased. Saturated vapor often exists alongside a liquid form of the same substance. This is common in evaporators and condensers during refrigeration system operation.
- The three basic processes that provide a cooling effect are air exchange, pressure change, and state change. These three processes are used in a refrigeration system to absorb heat out of a conditioned space and expel it into an unconditioned space.

Review Questions

Write your answers on a separate sheet of paper. Do not write in this book.

1. A gas is any physical substance that has _____.
   A. a definite volume, but takes the shape of the container holding it
   B. a definite volume and shape
   C. a relative density less than 1.0
   D. no definite volume or shape and expands to fill its container
2. According to the definition and the formula for pressure, if the area increases, _____.
   A. force decreases
   B. force increases
   C. pressure decreases
   D. pressure increases
3. According to Pascal's law, if a piston applies pressure to fluid in a sealed cylinder, the pressure will _____.
   A. be applied equally and undiminished to all surfaces of the cylinder
   B. be greatest near the piston and least at the farthest point from the piston
   C. remain unchanged, but the temperature of the fluid will decrease
   D. remain unchanged, but the temperature of the fluid will increase

Copyright Goodheart-Willcox Co., Inc.

4. Critical pressure is the _____.
   A. maximum pressure a substance is capable of achieving
   B. minimum pressure at which a gas at its critical temperature can condense
   C. minimum pressure at which a substance at its critical temperature can remain solid
   D. pressure applied to a solid that causes it to change to a liquid
5. The _____ the pressure on a substance, the _____ the temperature needed to bring about a change of physical state.
   A. higher, higher
   B. higher, lower
   C. lower, higher
   D. None of the above.
6. _____ law states that if volume is held constant, temperature varies directly with pressure.
   A. Boyle's
   B. Charles'
   C. Dalton's
   D. Gay-Lussac's
7. _____ law states that in a confined mixture of gases, the pressure of each gas must be added to calculate the total pressure.
   A. Boyle's
   B. Charles'
   C. Dalton's
   D. Gay-Lussac's
8. According to the combined gas law, if the pressure of a gas is held constant as its temperature is increased, then the volume of the gas _____.
   A. decreases
   B. increases
   C. remains constant
   D. None of the above.
9. A saturated vapor will condense if the _____.
   A. temperature of the vapor is increased
   B. pressure of the vapor is decreased
   C. pressure of the vapor is decreased and the temperature is increased
   D. pressure of the vapor is increased and the temperature is decreased
10. A cooling effect can be generated through _____.
   A. air exchange
   B. pressure change
   C. state change
   D. All of the above.

Copyright Goodheart-Willcox Co., Inc.

Hampden Engineering Corporation

HVAC training kits place all the components of a system in an easy to access arrangement so students can measure, observe, and understand all aspects of system operation.

Copyright Goodheart-Willcox Co., Inc.

CHAPTER 6 Basic Refrigeration Systems

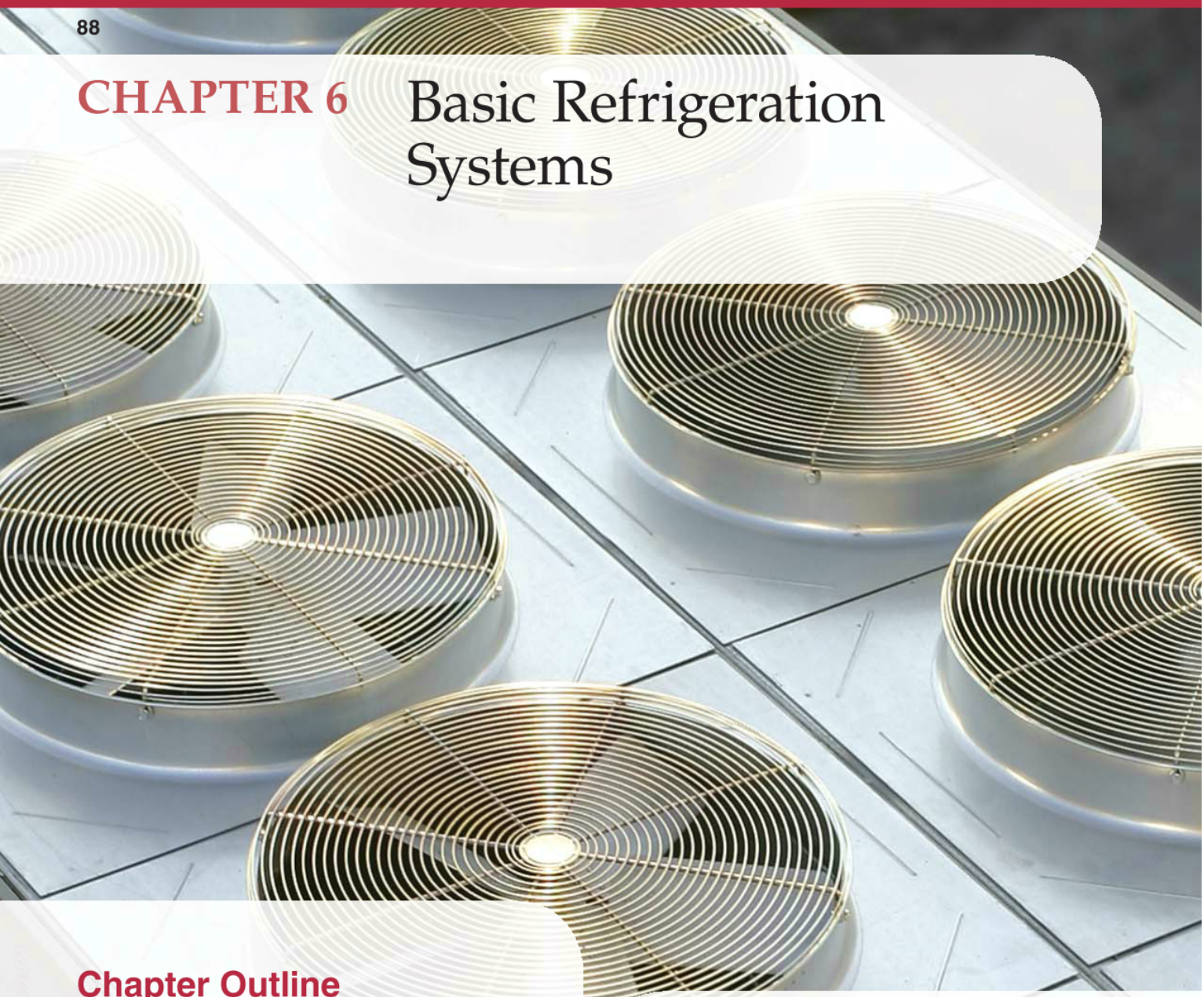

Chapter Outline

6.1 Compression Refrigeration Cycle
6.2 High Side and Low Side
6.3 Compression
- 6.3.1 Compressor
- 6.3.2 Oil Separator

6.4 Condensing
- 6.4.1 Condenser
- 6.4.2 Liquid Receiver
- 6.4.3 Liquid Line
- 6.4.4 Liquid Line Filter-Drier

6.5 Metering Device
6.6 Evaporating
- 6.6.1 Evaporator
- 6.6.2 Accumulator
- 6.6.3 Suction Line
- 6.6.4 Suction Line Filter-Drier

Learning Objectives

Information in this chapter will enable you to:

- Explain how phase changes are used in refrigeration systems to transfer heat.
- Describe how phase change is possible through pressure change or the addition or removal of heat.
- Summarize the four phases of the compression refrigeration cycle.
- Identify the components that divide the low and high sides of a compression refrigeration system.
- Understand the purpose of each of the components in a compression refrigeration system.

Technical Terms

accumulator
compressor
condenser
evaporator
filter-drier
flash gas
forced-air condenser
forced-draft evaporator
high side
high-side pressure
liquid line
liquid receiver
low side
low-side pressure
metering device
natural-convection condenser
natural-draft evaporator
oil separator
reciprocating
refrigerant
suction line
superheated

Review of Key Concepts

Reviewing these concepts from earlier chapters will help you understand new concepts presented in this chapter:

- Evaporation is a process that absorbs heat into the evaporating substance. Condensation is a process that releases heat from a condensing substance. (Chapter 4)
- An increase in pressure raises a substance's boiling point, and a decrease in pressure lowers a substance's boiling point. (Chapter 5)
- In a fixed volume, an increase in a gas's pressure will increase its temperature. A decrease in pressure will decrease a gas's temperature. (Chapter 5)

Introduction

The purpose of any refrigeration system is to remove heat from a space where it is not wanted. The two most popular methods of producing refrigeration are compression and absorption. Absorption refrigeration systems will be discussed in later chapters. This chapter will introduce the basics of how a compression refrigeration system operates and explain the purpose of each component in the system.

Video

- Basic Refrigeration System

6.1 Compression Refrigeration Cycle

From residential comfort cooling systems to commercial freezers, all compression refrigeration equipment removes heat using evaporation. Evaporation is one method the human body uses to cool itself. When our bodies detect that we are overheating, we sweat. The perspiration absorbs heat from our skin and evaporates. This transfer of heat by evaporation cools us. The refrigerant in a refrigeration system works like perspiration for buildings. It cools by absorbing heat. In refrigeration systems, ***refrigerants*** are fluids that absorb heat inside the refrigerated space and release the heat outside.

Removing heat from inside a refrigerated space is comparable to using a sponge to remove water from a leaking canoe. After the sponge soaks up some water in the canoe, it is held over the side of the canoe and squeezed, releasing the water overboard. This process transfers the water from the canoe into the lake, where the addition of more water makes little difference. Refrigeration systems transfer heat instead of water. In a refrigeration system, an evaporator is where the refrigerant "soaks up" heat. A compressor then "squeezes" the refrigerant into a condenser. In the condenser, the absorbed heat is released "overboard" outside the system, **Figure 6-1**.

In a refrigeration system, the refrigerant repeatedly changes phase from liquid to vapor (gas) and back again. These liquid and vapor phase changes are due to changes in pressure and temperature. Low-pressure liquid refrigerant can be compared to a dry sponge. A dry sponge has the potential to soak up a lot of water, and low-pressure liquid refrigerant has the potential to soak up and remove a lot of heat.

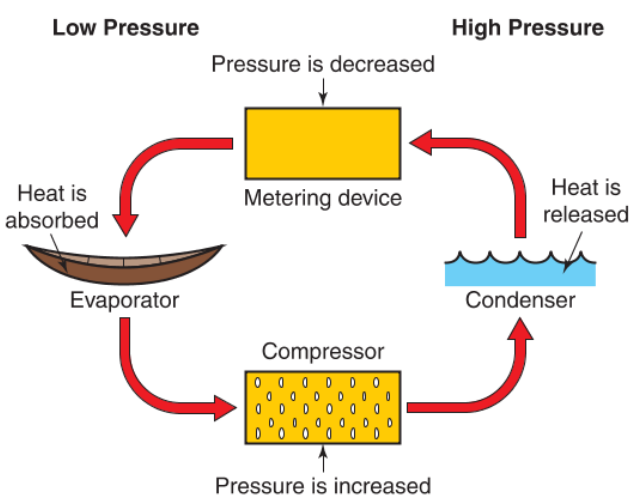

Goodheart-Willcox Publisher

Figure 6-1. Using a sponge to remove water from a canoe is an analogy for how a compression refrigeration system removes heat. Heat is absorbed and released due to phase changes and changes in pressure.

When the sponge is dipped in the canoe water, it is similar to refrigerant entering the evaporator. Both the canoe and the evaporator are the places that we want to modify and control. In the evaporator, low-pressure liquid refrigerant soaks up heat and changes into low-pressure vapor refrigerant. The absorbing or soaking up of heat by the liquid refrigerant in the evaporator occurs for two reasons: a decrease in pressure and a difference in temperature.

First, as the refrigerant enters the evaporator, a decrease in pressure causes the refrigerant's boiling point to decrease. A lower boiling point allows some of the liquid refrigerant to evaporate, which is a process that absorbs heat. Second, the rest of the cool liquid refrigerant absorbs the heat of the warm air surrounding the evaporator because of the temperature difference. Remember that heat naturally flows from a warmer to a cooler place. In this case, heat flows from the air around the evaporator to the refrigerant inside the evaporator. *Low-pressure liquid* refrigerant is like a dry sponge, but *low-pressure vapor* refrigerant is like a wet sponge that has sopped up water.

The compressor is a pump that draws the evaporator's low-pressure vapor refrigerant into it. By compressing the refrigerant into an increasingly smaller space, the compressor increases pressure and literally squeezes the low-pressure vapor refrigerant into a high-pressure vapor refrigerant and expels it into the condenser. *High-pressure vapor* refrigerant is like a soaking wet sponge that cannot absorb more water. The compressor's squeezing causes an increase in both the pressure and the temperature of the refrigerant.

In the condenser, heat is released from the high-pressure, heat-soaked vapor refrigerant as a result of the temperature difference between the hot refrigerant and the cooler air surrounding the condenser. The added heat content from the compressor increases the condenser's potential for releasing heat by raising the temperature difference between the refrigerant and the air surrounding the condenser. This increased difference allows the heat to escape more quickly. The condenser is like the space beside the boat where the soaked sponge is wrung out into the lake. Refrigerant leaves the condenser as a *high-pressure liquid*. Enough heat is released in the condenser to change the vapor back into liquid. This high-pressure liquid on its way back to the evaporator is comparable to the wrung-out sponge being brought back into the canoe for more water.

In a compression refrigeration system, absorption and rejection of heat occurs as often as necessary.

Copyright Goodheart-Willcox Co., Inc.

Just as water can enter a canoe in several ways, such as through leaks or waves splashing over the sides, so too, can heat enter a refrigerated space. Heat leaks through the insulated walls and enters when the door is opened. Heat flows from hot to less hot. Any warm substance placed inside a refrigerated space also serves as a source of heat. Heat is not destroyed by a refrigeration system. It is simply removed from the refrigerated space and released outside.

6.2 High Side and Low Side

One of the most important factors in the operation of refrigeration systems is pressure. Heat is absorbed or rejected based on pressure. High pressure causes the rejection of heat. Low pressure allows the absorption of heat. Refrigeration systems have a low-pressure side ("low side") and a high-pressure side ("high side"), **Figure 6-2**.

In the refrigeration cycle, the opening of the evaporator just past the metering device is the beginning of the low side of the system. The ***low side*** of the system is where heat is absorbed and removed from the refrigerated space. It is under low pressure. The compressor serves as the divider between the low and high sides of a refrigeration system.

The compressor then uses suction and draws in low-pressure refrigerant, compresses it, and pushes it into the high side under high pressure. The ***high side*** of the system is where heat is rejected out of the refrigeration system. It is under high pressure. The metering device divides the high side from the low side. The following sections explain the four phases of the compression refrigeration cycle and the role that each system component plays in that cycle.

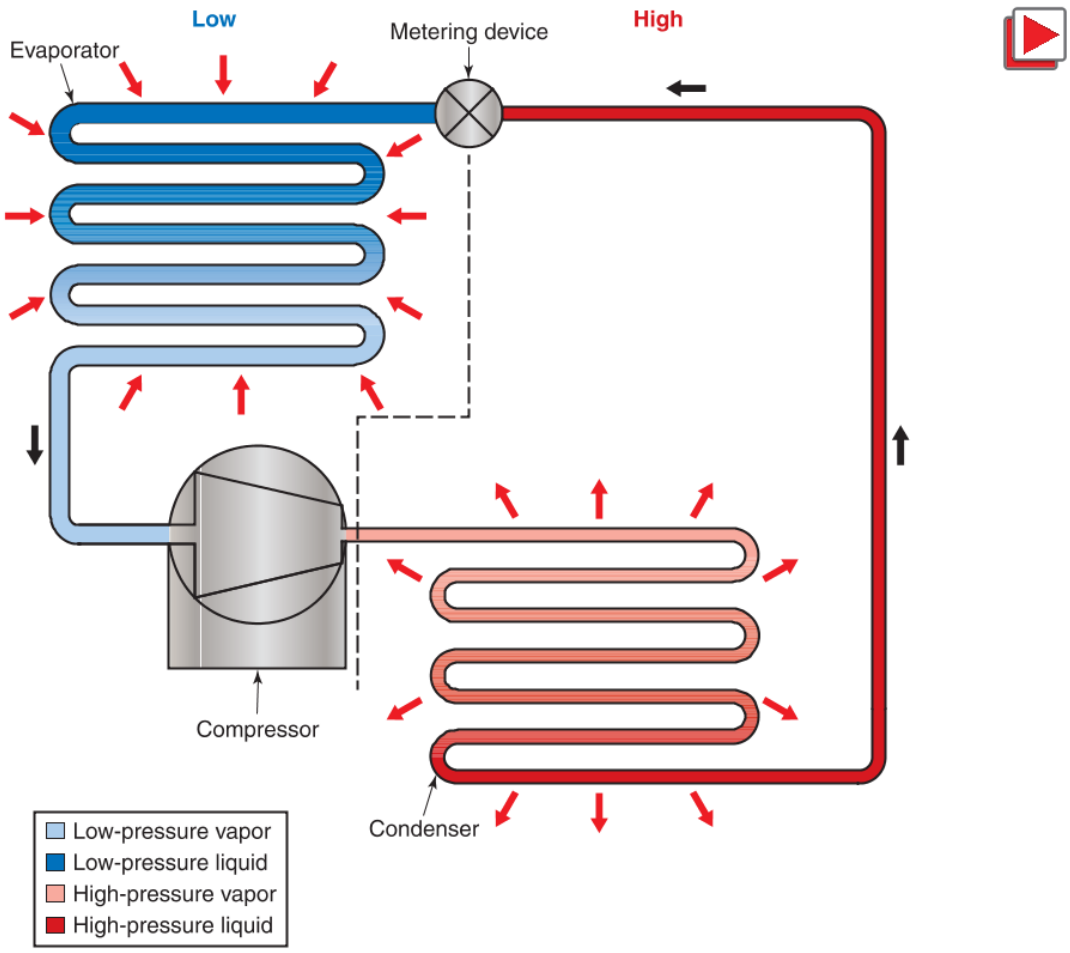

Goodheart-Willcox Publisher

Figure 6-2. This diagram of a compression cycle shows the two pressure conditions. The low-pressure side extends from the metering device, through the evaporator, and to the compressor. The high-pressure side starts at the compressor's discharge valve and extends through the condenser to the metering device. The low side absorbs heat. The high side releases heat.

Copyright Goodheart-Willcox Co., Inc.

Pro Tip

HVACR System Pressures

An HVACR system is divided into the high side and the low side. Each side is a fixed volume. Remember that Pascal's law states that "pressure applied upon a confined fluid is transmitted equally and undiminished in all directions." Therefore, the low side essentially has the same pressure value throughout, and the high side essentially has the same pressure value throughout.

The names used to refer to these pressures can vary. ***Low-side pressure*** can also be called *suction pressure*, *evaporator pressure*, and several other names, depending on circumstances. ***High-side pressure*** can also be called *discharge pressure*, *condenser pressure*, *head pressure*, and several other names, depending on circumstances. Be aware of these different names of system pressure.

6.3 Compression

The compressor is the "heart" of a compression refrigeration system. It acts as the pump of the refrigeration system. A compressor's role is two-fold. First, it must create suction to draw heat-filled refrigerant vapor from the evaporator (low-pressure area) into the compressor. Because an operating compressor is constantly drawing refrigerant out of the evaporator, it creates low pressure there. Second, the compressor compresses each quantity of refrigerant drawn in during suction, which increases both the pressure and temperature of the refrigerant. The refrigerant vapor leaves the compressor discharge line and enters the condenser as a high-temperature, high-pressure vapor.

Upon startup, the compressor begins to move refrigerant molecules from the low side to the high side. These molecules of refrigerant enter the condenser from the compressor through the compressor's discharge line. Before startup, the temperatures inside and outside the condenser are the same. See **Figure 6-3A**. In order to promote heat transfer, the refrigerant vapor temperature must be increased so that it will give up heat to the surrounding air.

The longer the compressor runs, the more vapor molecules it squeezes into the condenser. While the condenser volume remains unchanged, its pressure increases. With a constant volume, pressure and temperature both rise and fall together. Therefore, the condenser temperature increases as its pressure increases.

The high temperature of the refrigerant in the condenser causes heat to flow to the surrounding metal and air. This cooling continues until enough heat loss makes some vapor molecules condense into liquid molecules. As these molecules collect, they flow into the liquid line. See **Figure 6-3B**.

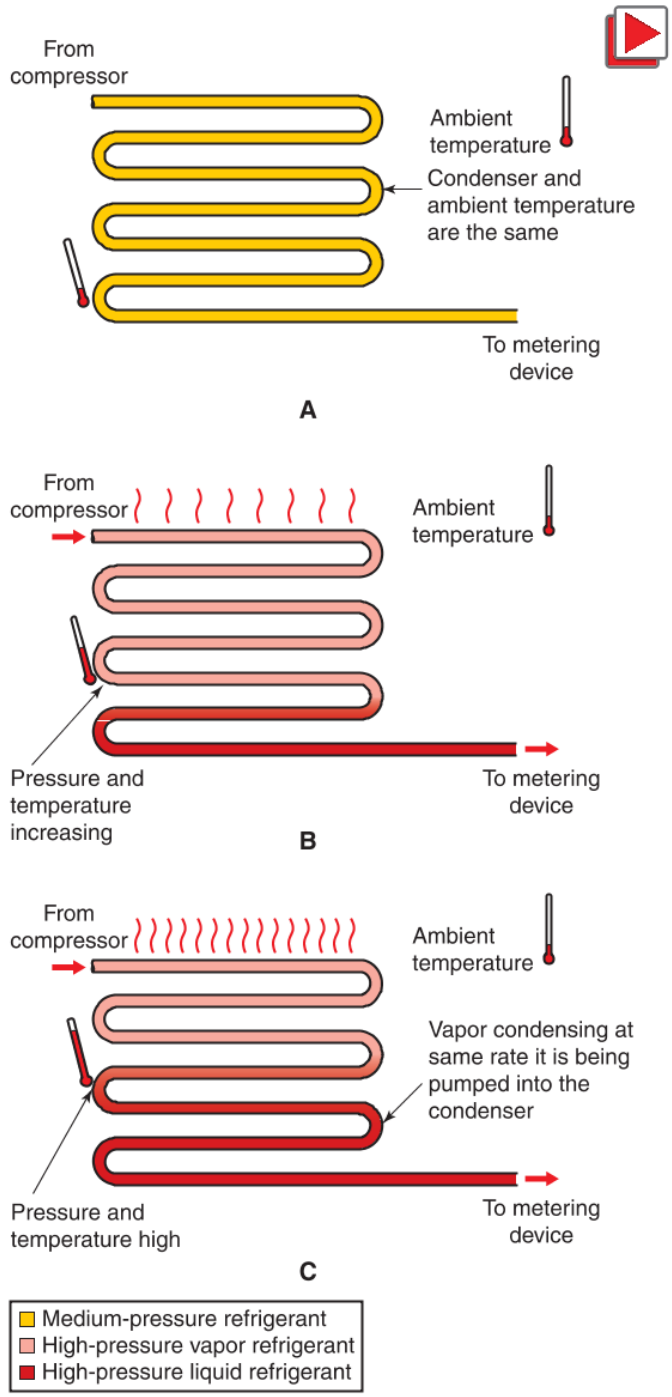

Goodheart-Willcox Publisher

Figure 6-3. A—Before the compressor starts, the pressure is not high, and the condenser temperature is near ambient temperature. B—As a compressor operates, the temperature and pressure in the condenser increase, and some refrigerant vapor condenses into liquid. C—The system is now in a state of equilibrium (balance). The pressure is high, much heat is being removed, and vaporized refrigerant is condensing at the same rate that it is being pumped into the condenser.

Copyright Goodheart-Willcox Co., Inc.

The temperature and pressure continue to rise until operational balance is reached. This is when the number of vapor molecules that condense into liquid equals the number of vapor molecules that the compressor pumps into the condenser. See **Figure 6-3C**.

If anything changes this balance, the condensing pressure and temperature adjust accordingly. For example, if the room gets warmer, the pressure and temperature rise again. This continues until just as many vapor molecules are condensing as are being pumped into the condenser.

After condensing, the refrigerant passes through the liquid line to the metering device. At the metering device, refrigerant pressure is reduced to allow evaporation of the liquid at a low temperature in the evaporator.

6.3.1 Compressor

In a mechanical HVACR system, a ***compressor*** is a device that removes heat-laden, low-pressure vapor refrigerant from the evaporator. It compresses (squeezes) vapor into a small volume at a high temperature and high pressure. This vapor is pumped into the condenser. The compressor is one of the two places that separate a system's low side and high side. A discharge line connects the compressor to the condenser. It is smaller than the suction line, since vapor has been compressed to a smaller volume at a higher temperature and pressure. A discharge line contains superheated vapor at high pressure.

Safety Note

Discharge Line Danger

When a system is operating, a discharge line becomes very hot. Do *not* touch it.

The reciprocating compressor is commonly used in domestic, commercial, and industrial refrigeration systems. ***Reciprocating*** is a term that describes moving first in one direction and then in the opposite direction. This movement may be in a back-and-forth direction or an up-and-down direction. See **Figure 6-4**. While

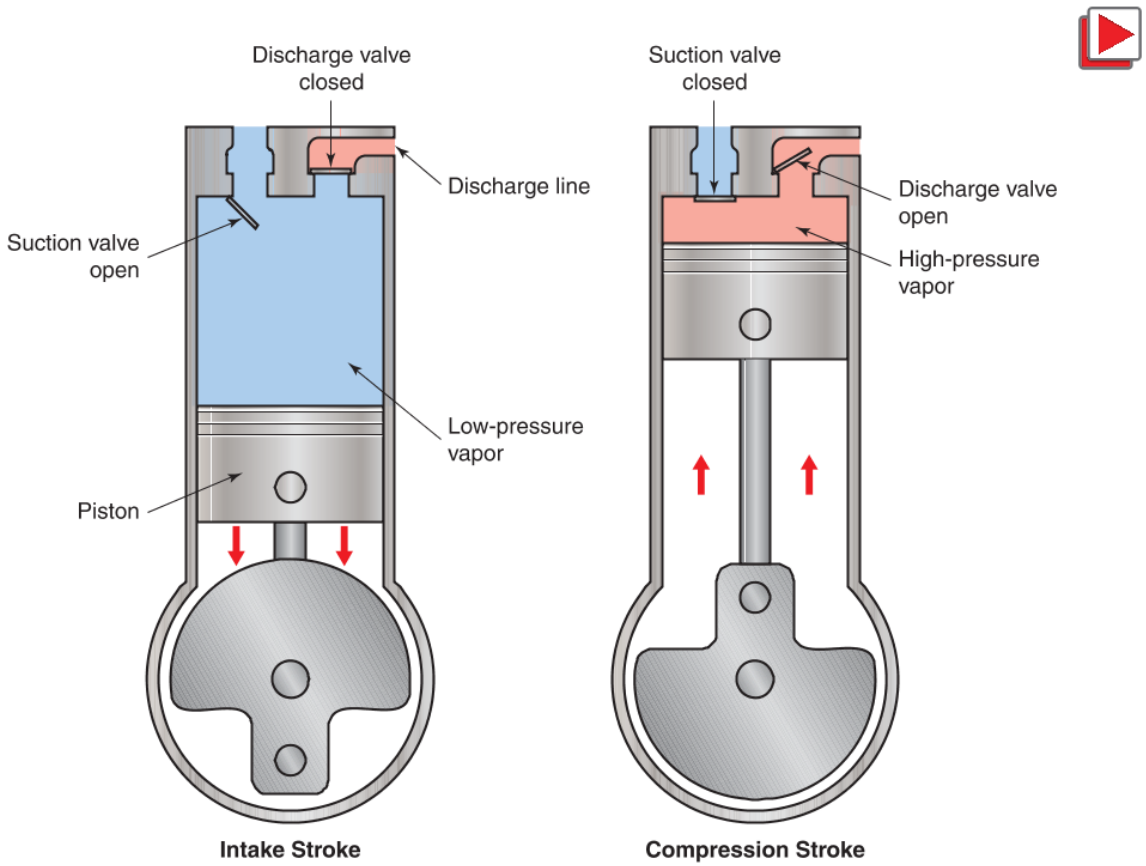

Goodheart-Willcox Publisher

Figure 6-4. As a reciprocating compressor moves back and forth, it draws in low-pressure vapor refrigerant and compresses it into high-pressure vapor refrigerant.

Copyright Goodheart-Willcox Co., Inc.

the compressor motor turns, the attached piston moves up and down within the cylinder. It is this reciprocating movement of the compressor piston that provides both the suction of the refrigerant into the compressor and the compression of the refrigerant, which raises the heat content and pressure and expels the refrigerant into the condenser, **Figure 6-5**.

The compressor is the most expensive and crucial component of a system. It can be thought of as being the "heart" of the refrigeration system. Its capacity must be matched to the capacity of the other components to effectively push the refrigerant through the high side at the exact rate the vapor is being removed from the evaporator on the low side.

6.3.2 Oil Separator

Compressors are lubricated by oil. This oil is placed inside the compressor crankcase or housing. It is circulated to various compressor parts. In a hermetic (sealed) system, this oil also lubricates the motor bearings.

When the compressor operates, small amounts of oil are pumped out with the hot, compressed vapor. A small amount of oil throughout the system does no harm. However, too much oil entering the condenser, metering device, evaporator, and filters interferes with their operation. Oil can be separated from refrigerant by placing an oil separator between the compressor exhaust and the condenser. The operation of such a separator is shown in **Figure 6-6**.

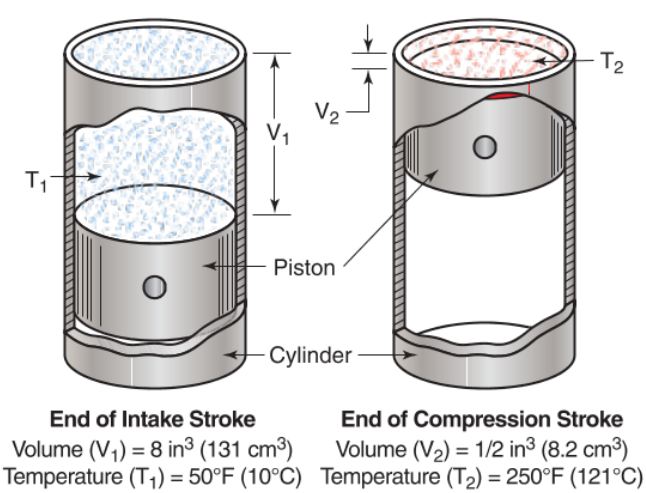

Goodheart-Willcox Publisher

Figure 6-5. The temperature of the vapor in the cylinder increases as the vapor is compressed into a smaller space by the piston.

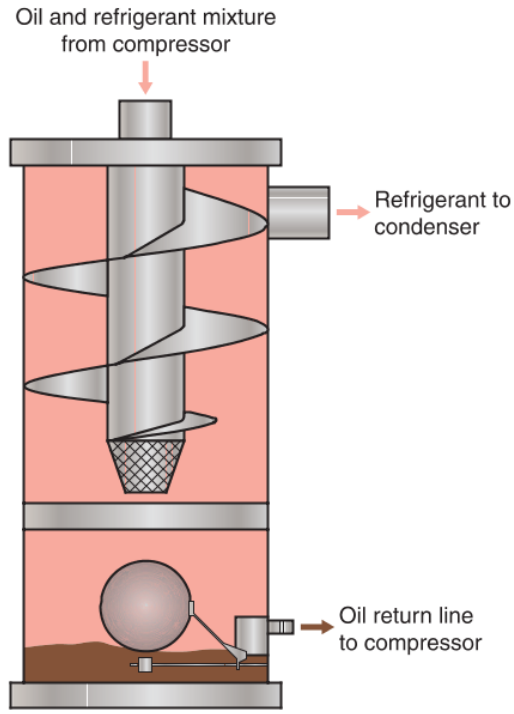

Goodheart-Willcox Publisher

Figure 6-6. An oil separator located in the discharge line. Note the flows of refrigerant and oil.

An ***oil separator*** is a tank or cylinder that contains a series of baffles or screens that collect oil. The oil, separated from the hot, compressed vapors, drops to the bottom of the oil separator. A float controls a needle valve to an oil return line connected to the compressor crankcase. When the oil level is high enough, the float rises and opens the needle valve. The pressure in the oil separator is considerably higher than the pressure in the compressor crankcase. This causes the oil to return quickly to the compressor crankcase. The oil serves as a liquid seal to prevent refrigerant from entering the return line. The float closes the needle valve when the oil level in the separator drops.

Oil separators are quite efficient. They allow very little oil to pass into the rest of the system. Oil separators are most commonly used in large commercial installations.

6.4 Condensing

A condenser is the part of a compression refrigeration system that releases heat from the vapor refrigerant and allows the vapor to condense back into liquid. Only liquid refrigerant should leave the condenser. A condenser must be sized with consideration to the size of the compressor and evaporator.

High-pressure, high-temperature vapor discharged by the compressor travels through the discharge line to

Copyright Goodheart-Willcox Co., Inc.

the condenser. Exiting the condenser, the liquid refrigerant travels through the liquid line to the metering device.

6.4.1 Condenser

In the refrigeration cycle, a ***condenser*** removes the latent heat from the refrigerant vapor. By releasing the latent heat, the vapor condenses back to a liquid.

Pro Tip

Latent Heat Terms

A tool, part, component, or process in a refrigeration system may have numerous names. This can be confusing, but it is important for HVACR professionals to be aware of these different names. For example, in the paragraph above, the term *latent heat* can also be written as *condensation heat*, *heat of evaporation*, *evaporation heat*, *heat of vaporization*, *enthalpy of vaporization*, and *enthalpy of condensation*. These all refer to the heat necessary for a change of phase. In the case of a condenser, it is the heat for changing a vapor into a liquid.

Condensers frequently transfer heat into one of two substances: air or water. Air-cooled condensers are cooled by the flow of air. As hot, high-pressure refrigerant vapor flows through the condenser tubes, air around the condenser accepts the heat given up by the condensing refrigerant. Often, air-cooled condensers have fans that blow air over the tubes to remove heat more quickly. A condenser with a fan is a ***forced-air condenser***. Condensers without fans are ***natural-convection condensers***. These are also called *static condensers*, **Figure 6-7**.

Water-cooled condensers are mainly manufactured in three different designs: shell-and-tube, shell-and-coil, and tube-within-a-tube. In a shell-and-tube condenser, cooling water flows through long, straight copper pipes that run along the inside of a long cylinder filled with hot refrigerant. In a shell-and-coil condenser, water flows through a coil of copper tubing that winds around the walls of a shell filled with refrigerant. A tube-within-a-tube condenser consists of two tubes. One tube is located inside the other. Water

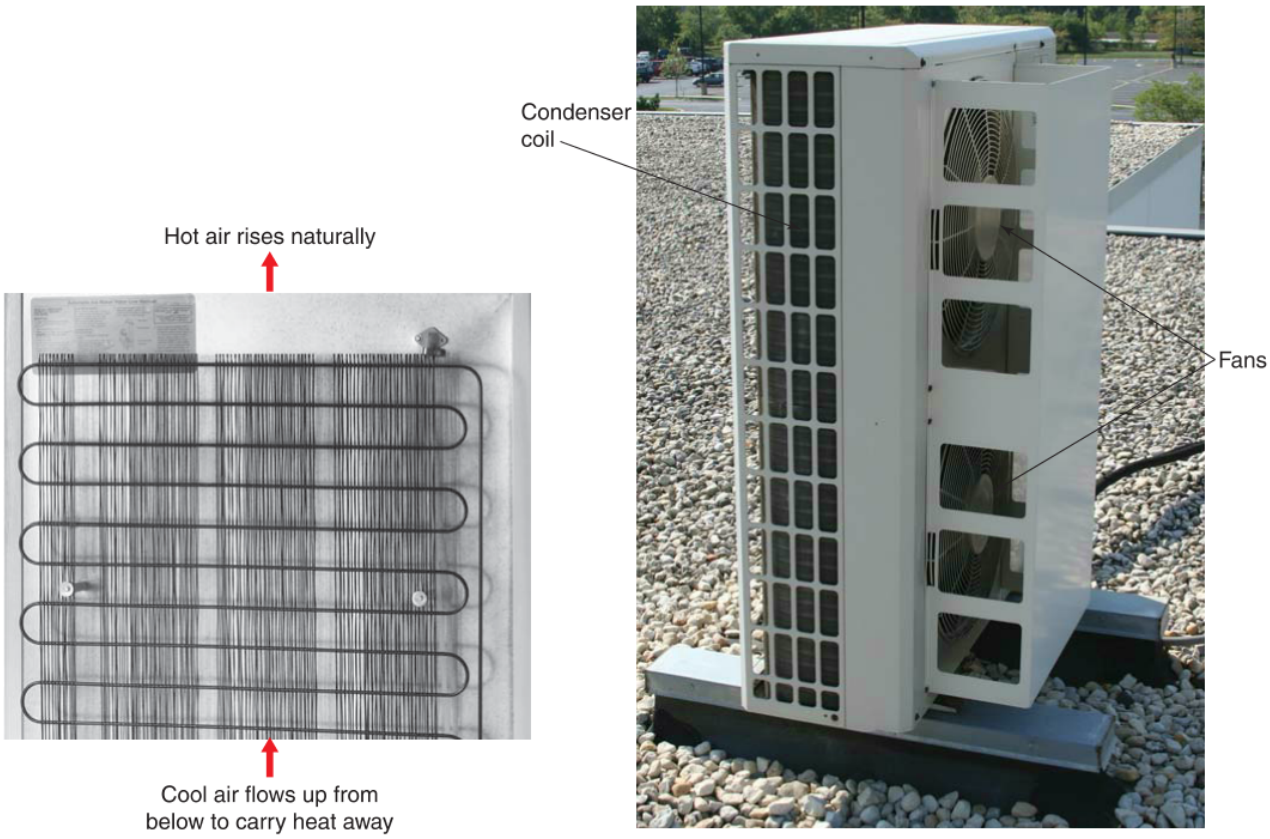

Whirlpool Corporation; Goodheart-Willcox Publisher

Figure 6-7. A—This static condenser relies on natural convection to carry away the heat released by vapor refrigerant as it condenses. B—A forced-air condenser uses one or more fans to disperse heat more quickly than a static condenser.

Copyright Goodheart-Willcox Co., Inc.

flows through the inner tube in one direction. In the outer tube, refrigerant flows in the opposite direction of the water flow.

6.4.2 Liquid Receiver

The ***liquid receiver*** is a storage tank for liquid refrigerant located on the high side between the condenser and the liquid line. Occasionally, a liquid receiver is built into the bottom of a condenser, **Figure 6-8**.

During system servicing, refrigerant is often pumped out of various system parts and into the liquid receiver where the refrigerant can be sealed off from the rest of the system. This is called a pump down. Having a liquid receiver makes the quantity of refrigerant in a system less critical. When a smaller amount of refrigerant is needed, the remaining refrigerant collects in the liquid receiver.

Most liquid receivers have service valves. A fine copper mesh in the liquid receiver outlet prevents dirt from entering the liquid line. See **Figure 6-9**. Liquid receivers are usually found on larger HVACR systems that have a significant refrigerant charge. These systems use either low-side float or expansion valve metering devices. Systems with a capillary tube metering device do not use liquid receivers.

Blissfield Manufacturing

Figure 6-8. Liquid receivers can be small to very large. They allow for greater flexibility in refrigeration volume in the system, which makes charge amount less critical.

Copyright Goodheart-Willcox Co., Inc.

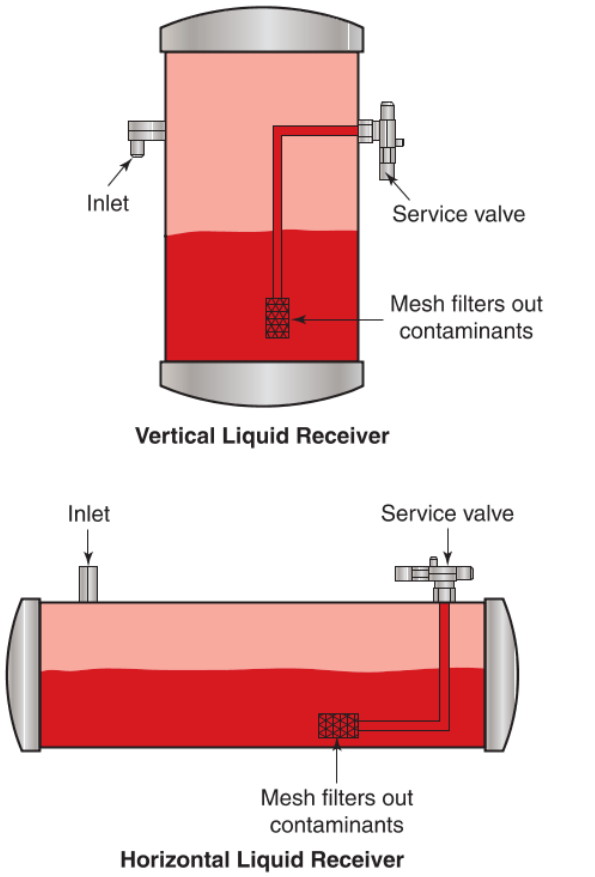

Goodheart-Willcox Publisher

Figure 6-9. Two common types of liquid receivers. Note the liquid receiver service valves. They make service and maintenance tasks easier to perform.

6.4.3 Liquid Line

A ***liquid line*** is tubing that carries liquid refrigerant from the condenser or liquid receiver to the metering device. Copper tubing is most commonly used. Liquid lines may be connected by brazing or using flared fittings. Because refrigerant is compressed at high pressure on the high side, a liquid line has a smaller diameter than a system's suction line.

In some systems, the liquid line may be in contact with all or part of the suction line. This arrangement forms a heat exchanger between each refrigerant line that warms the suction line and cools the liquid line. This helps to prevent condensing in the suction line and helps to prevent flash gas in the liquid line. ***Flash gas*** is the instantaneous evaporation of some of the liquid refrigerant. Some flash gas is acceptable in the evaporator because it cools the remaining liquid refrigerant to the desired evaporation temperature. Excessive flash gas reduces the efficiency of the evaporator. When a system has an expansion valve as its metering device, flash gas in the liquid line can cause damage to the expansion valve.

6.4.4 Liquid Line Filter-Drier

The liquid line contains a filter-drier. Liquid line filter-driers are also called *high-side filter-driers*. All systems should have a liquid line filter-drier installed. A ***filter-drier*** collects moisture, dirt, metal, and other debris to prevent any from entering the metering device. The drying element in the filter removes moisture. This moisture might otherwise freeze in the metering device. Moisture is also harmful when mixed with oil in a system because it forms sludge and acid. Moisture is especially harmful to hermetic units. A liquid line filter-drier is shown in **Figure 6-10**.

6.5 Metering Device

The ***metering device*** controls the flow of refrigerant into the evaporator. *Metering device*, *refrigerant control*, and *refrigerant flow control* are terms often used interchangeably. A metering device is located between the liquid line and the evaporator. Its function is to lower the pressure of the refrigerant by restricting the passageway into the evaporator, **Figure 6-11**.

A metering device's restriction allows only a small quantity of liquid refrigerant to pass. Since this small quantity of liquid refrigerant does not fill all the available space in the evaporator, pressure is reduced. The space that the liquid refrigerant does not fill is filled with vapor refrigerant that flash boils because of the

Emerson Electric Co.

Figure 6-10. This liquid line filter-drier has arrows printed on it to show the installer which direction refrigerant should be flowing through the device.

Copyright Goodheart-Willcox Co., Inc.

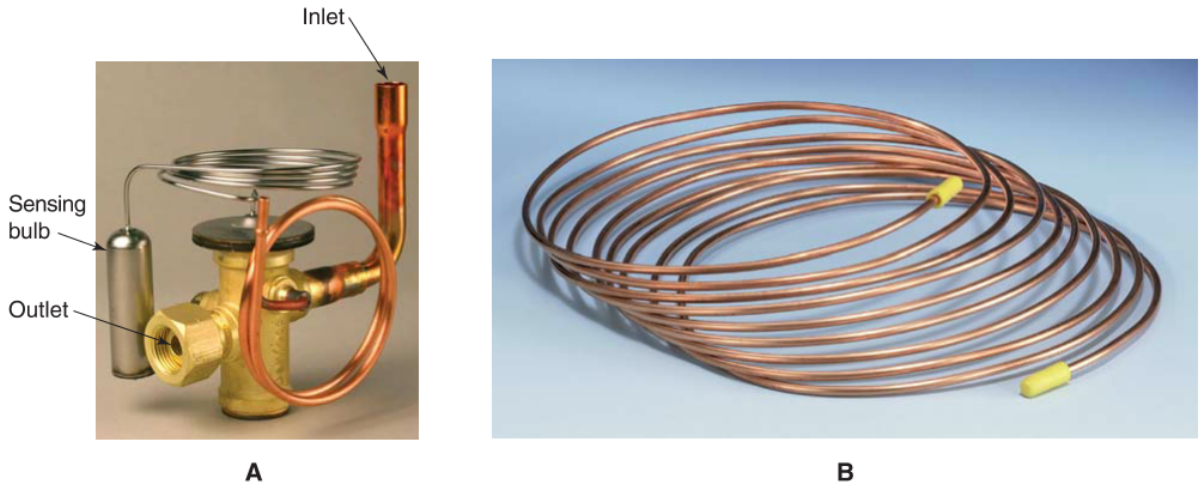

Danfoss; Sealed Unit Parts Co., Inc.

Figure 6-11. Two types of metering devices are shown here. A—A thermostatic expansion valve has a sensing bulb that reacts to temperature and can modify the flow of refrigerant through the valve. B—A capillary tube, which is commonly used in domestic refrigerators, has a narrow passageway that restricts the flow of refrigerant.

reduced pressure. The metering device maintains this lower pressure in the evaporator.

There are several types of metering devices:

- Fixed orifice.
- Capillary tube.
- Thermostatic expansion valve (TXV).
- Automatic expansion valve (AXV).
- Electronic expansion valve (EEV).
- Low-side float (LSF).
- High-side float (HSF).

These types of metering devices and their characteristics are explained in Chapter 20, *Metering Devices*.

6.6 Evaporating

In compression refrigeration systems, evaporation is the process by which refrigeration takes place. As mentioned earlier in this chapter, evaporation occurs when a liquid absorbs heat and becomes a gas or vapor. In a refrigeration system, an evaporator is the component that aids a refrigerant in heat absorption.

Warm air passes through the fins of an evaporator. These fins add to the surface area of the evaporator tubing, increasing the transfer of heat from the air to the tubing. Heat is absorbed by the liquid refrigerant, causing it to evaporate. The refrigerant that had entered the evaporator as a liquid now changes to a vapor.

Refrigerants with low boiling points are preferred, as the temperature difference between the air and the refrigerant is required for heat to flow from hot to cold. The temperature of the air flowing over the evaporator becomes increasingly colder, which cools the conditioned area.

6.6.1 Evaporator

An ***evaporator*** is a heat-exchanging device that absorbs heat into its refrigerant. When a refrigeration system is running, liquid refrigerant entering the evaporator from the metering device is suddenly under low pressure. The tremendous pressure drop between the metering device and evaporator lowers the boiling temperature of the liquid refrigerant. It is so low that some liquid refrigerant entering the evaporator immediately boils into vapor and absorbs heat. As the rest of the liquid refrigerant travels through the evaporator, it boils into vapor by absorbing heat from the air around the evaporator. This absorption of heat is how the refrigeration of the conditioned space begins.

Evaporators can be either natural draft or forced draft (forced air). With a ***natural-draft evaporator***, air naturally moves by the evaporator due to changes in temperature and pressure. Remember that hot air naturally rises. With a ***forced-draft evaporator***, air is blown around the evaporator by a fan, **Figure 6-12**.

Copyright Goodheart-Willcox Co., Inc.

A B

Lordan A.C.S. Ltd

Figure 6-12. Two different size evaporators. A—A large rail evaporator with distributor shown on its side. B—A specially made miniature evaporator.

Pro Tip

Cooling Coil

In various publications and in the field, the terms *evaporator* and *cooling coil* are often used interchangeably. However, this practice is not always accurate. Any tubing that provides cooling using a refrigerant that absorbs heat in order to evaporate is called an *evaporator.* Any tubing that provides cooling using brine or any fluid that absorbs heat but does *not* evaporate is called a cooling coil. Often, cooling coils can be found on more complicated systems, such as ground-source heat pumps or complex commercial refrigeration systems that include a secondary loop refrigeration system.

6.6.2 Accumulator

Refrigerant in a suction line is always supposed to be in vapor form. However, vapor refrigerant may condense before reaching the compressor. If this liquid refrigerant enters the compressor, it can cause considerable damage to the compressor. An ***accumulator*** is a tank in the suction line that prevents liquid refrigerant from flowing through the suction line and into the compressor. A typical accumulator has its inlet and outlet at the top. Any liquid refrigerant that flows into an accumulator falls to the bottom and must evaporate to enter the suction line, **Figure 6-13**. Accumulators are also referred to as *suction accumulators* because they are in the suction line.

Emerson Climate Technologies

Figure 6-13. Note the inlet and outlet at the top of this accumulator.

Copyright Goodheart-Willcox Co., Inc.

Not all refrigeration systems have accumulators. Most small systems do not require an accumulator. Commercial system accumulators are explained in Chapter 22, *Refrigerant Flow Components*.

6.6.3 Suction Line

A ***suction line*** is tubing that carries refrigerant vapor from evaporator to compressor. A suction line must be large enough to carry the vaporized refrigerant with minimal flow resistance. It should slope from the evaporator down to the compressor. If it does not slope, pockets of oil will collect.

A suction line is commonly made of copper tubing. It should be insulated in order to prevent moisture from the air from condensing on the cold tubing. An insulated suction line keeps a system balanced and running smoothly, **Figure 6-14**.

DiversiTech Corporation

Figure 6-14. Insulation is placed over a copper suction line to prevent the formation of condensation on the line and prevent reduced system efficiency from heat absorbed outside the conditioned space.

Thinking Green

Suction Line Condensation

Condensation on the suction line means that more heat is being absorbed by the refrigerant vapor. The problem is that the vapor may be taking heat from spaces that are not intended to be conditioned. This additional heat absorption means that the refrigeration system would be bearing a heavier load than it should. This causes reduced efficiency, extra work for the system, and higher power bills for the owner. Insulating the suction line can improve system efficiency.

The vapor refrigerant moving through the suction line is ***superheated***. This means that the temperature of the refrigerant is above its condensation (saturation) point. This additional heat content can be measured in degrees because it is sensible heat. Be aware that the term *superheat* refers to the difference in temperature between the actual temperature of the refrigerant and the temperature that corresponds to the pressure of the refrigerant. Measurement and calculation of superheat will be covered in later chapters. A refrigerant that is superheated must first decrease in temperature before it can begin to condense into a liquid.

Remember that it is the compressor's suction of vapor refrigerant through the suction line that provides the low pressure necessary for the low boiling point in the evaporator. This means that the refrigerant inside the suction line is a low-temperature, low-pressure superheated gas. Although the term *superheated* sounds like something hot, the suction line in which the superheated refrigerant flows is cool or cold to the touch, because the boiling point of the refrigerant is so low.

6.6.4 Suction Line Filter-Drier

Some systems include a suction line filter-drier between the evaporator and compressor. A suction line filter-drier performs the same function as a liquid line filter-drier, but it is designed for low-pressure use on the low side of the system. Suction line filter-driers may be a part of the original system or added during system service for a particular purpose. Some filter-driers are temporarily placed in the system to clean the refrigerant. Certain system failures, such as compressor motor burnout, require the addition of specialized filter-driers to protect the system from circulating acid and contaminants. **Figure 6-15** shows a typical suction line filter-drier.

A filter-drier used in the suction line should offer little resistance to vaporized refrigerant flow. The pressure difference between the evaporator and the inlet to the compressor should be small. If a suction line filter-drier is causing a large or noticeable pressure drop, it should be removed from the system. Suction line filter-driers are also called *low-side filter-driers*.

Copyright Goodheart-Willcox Co., Inc.

Emerson Electric Co.

Figure 6-15. The direction of refrigerant vapor flow is indicated on this suction line filter-drier. Note the service connections on each side of the filter. These are convenient for connecting gauges for taking pressure measurements.

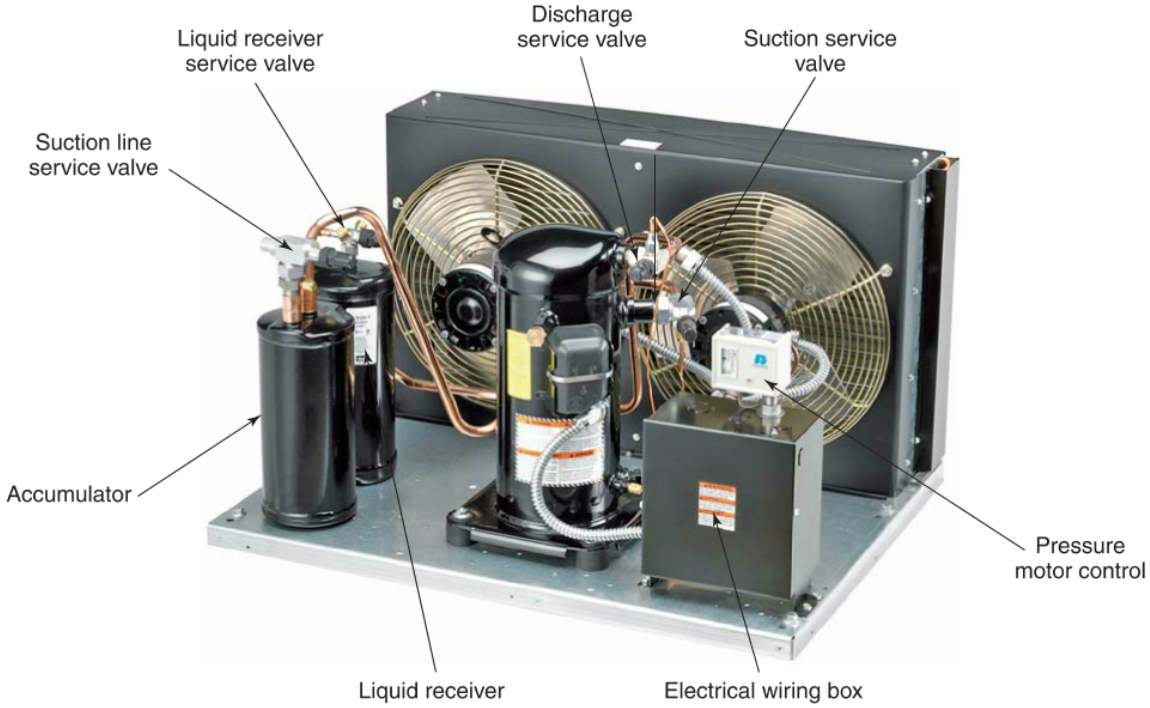

Tecumseh Products Company

Some commercial refrigeration condensing units have nearly all the basic components of an HVACR system in one convenient location. This arrangement promotes ease of service and installation.

Copyright Goodheart-Willcox Co., Inc.

Chapter Review

Summary

- Heat transfer is accomplished in refrigeration systems by refrigerant changing phase between vapor and liquid. As a refrigerant evaporates, it absorbs heat. As refrigerant condenses, it expels heat. Heat always flows from hot to less hot.
- The four processes that make up a compression refrigeration system are compressing, condensing, metering, and evaporating. A compression refrigeration system uses mechanical energy to drive the refrigeration process.
- A compressor raises the pressure and heat content of a refrigerant as it pumps the refrigerant into the high side of the system.
- Condensation of refrigerant takes place in a condenser. This process releases heat and changes the phase of the refrigerant from vapor to liquid.
- A liquid line is a refrigerant passage from a condenser or liquid receiver and to a metering device. A filter-drier in the liquid line removes moisture and contaminants from high-side refrigerant.
- A metering device restricts the passage of refrigerant to lower its pressure. A metering device divides the high side of the system from the low side.
- Evaporation of refrigerant takes place in an evaporator. As liquid refrigerant absorbs heat, it changes into a vapor.
- A suction line is a refrigerant passage from an evaporator to a compressor. It may contain an accumulator and a filter-drier.
- By allowing only vapor refrigerant to flow through a suction line, accumulators protect compressors from damage that would be caused by pumping liquid refrigerant.

Review Questions

Answer the following questions using the information in this chapter.

1. _____ refrigerant is like a dry sponge that has the ability to soak up a lot of water.
   A. Low-pressure liquid
   B. Low-pressure vapor
   C. High-pressure liquid
   D. High-pressure vapor
2. _____ refrigerant is like a soaking wet sponge that cannot absorb more water.
   A. Low-pressure liquid
   B. Low-pressure vapor
   C. High-pressure liquid
   D. High-pressure vapor
3. From the metering device through the evaporator to the compressor is the _____ side of the system.
   A. low
   B. high
   C. condensing
   D. heat-rejecting
4. From the compressor exhaust through the condenser and liquid line to the metering device is the _____ side of the system.
   A. low
   B. high
   C. evaporative
   D. suction
5. Using suction, a compressor draws in refrigerant by creating _____ in the evaporator.
   A. low pressure
   B. high pressure
   C. low temperatures
   D. high temperatures
6. Using the process of compression, a compressor increases refrigerant _____.
   A. pressure and volume
   B. temperature and volume
   C. volume and heat content
   D. pressure and heat content
7. Commonly used in different HVACR applications, _____ compressors use a back-and-forth or up-and-down motion.
   A. rotary
   B. scrolling
   C. reciprocating
   D. centrifugal
8. A heat-exchanging device designed to expel or reject heat is a(n) _____.
   A. accumulator
   B. evaporator
   C. liquid receiver
   D. condenser
9. A condenser that uses a fan to remove heat more quickly is called a _____ condenser.
   A. static
   B. forced-air
   C. natural-convection
   D. water-cooled

Copyright Goodheart-Willcox Co., Inc.

10. Heat flow can best be described as _____.
    A. flowing from hot areas to cold areas
    B. flowing from cold areas to hot areas
    C. remaining stationary unless forced to move
    D. remaining stationary regardless of forces around it
11. A storage tank for liquid refrigerant on the high side of the system is a(n) _____.
    A. accumulator
    B. condenser
    C. evaporator
    D. liquid receiver
12. A refrigeration system with a(n) _____ metering device does *not* use a liquid receiver.
    A. capillary tube
    B. low-side float
    C. automatic expansion valve
    D. thermostatic expansion valve
13. Into which tank can a technician pump a refrigeration system's entire refrigerant charge to perform service?
    A. Accumulator
    B. Evaporator
    C. Condenser
    D. Liquid receiver
14. The high-pressure line between condenser and metering device is called the _____ line.
    A. condensing
    B. suction
    C. liquid
    D. discharge
15. To protect a system from dirt, moisture, metal, and other debris, install a(n) _____.
    A. accumulator
    B. filter-drier
    C. metering device
    D. oil separator
16. A heat-exchanging device designed to absorb heat is a(n) _____.
    A. accumulator
    B. evaporator
    C. liquid receiver
    D. condenser
17. The instantaneous evaporation of liquid refrigerant in an evaporator is called _____.
    A. absorbent
    B. subcooled liquid
    C. superheated vapor
    D. flash gas
18. A storage tank that traps liquid refrigerant on the low side of the system is a(n) _____.
    A. accumulator
    B. condenser
    C. evaporator
    D. liquid receiver
19. An accumulator will function best with its inlet positioned _____ the tank.
    A. at the top of
    B. at the bottom of
    C. in the middle of
    D. anywhere on
20. The low-pressure line is sometimes called the _____ line.
    A. condensing
    B. suction
    C. liquid
    D. discharge

Copyright Goodheart-Willcox Co., Inc.

CHAPTER 7 Tools and Supplies

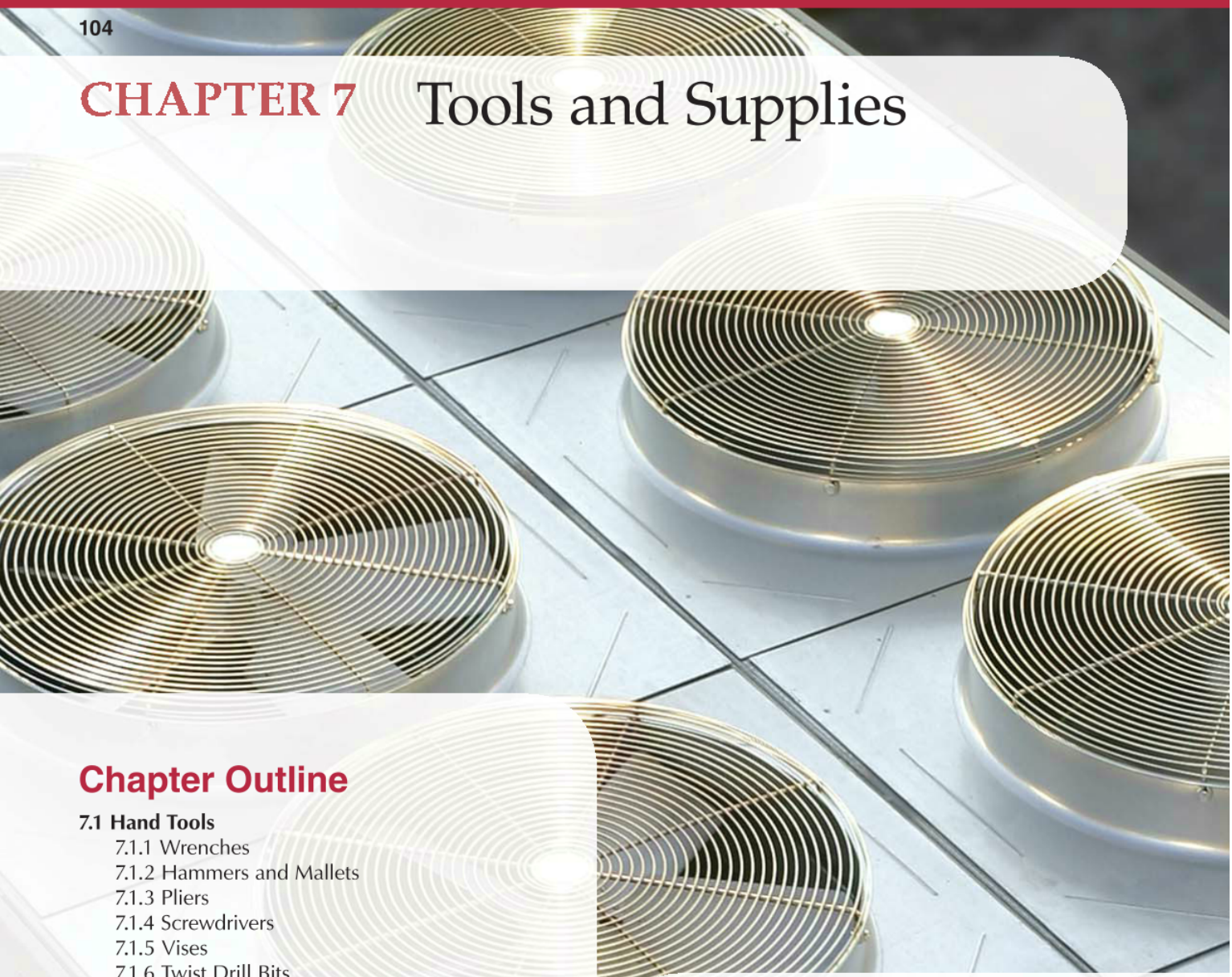

Chapter Outline

7.1 Hand Tools
- 7.1.1 Wrenches
- 7.1.2 Hammers and Mallets
- 7.1.3 Pliers
- 7.1.4 Screwdrivers
- 7.1.5 Vises
- 7.1.6 Twist Drill Bits
- 7.1.7 Cold Chisels
- 7.1.8 Punches
- 7.1.9 Files
- 7.1.10 Hacksaws
- 7.1.11 Levels

7.2 Power Tools

7.3 Instruments
- 7.3.1 Thermometers
- 7.3.2 Manometers
- 7.3.3 Linear Measuring Tools
- 7.3.4 Multimeters

7.4 Standard Supplies
- 7.4.1 Fasteners
- 7.4.2 Gaskets
- 7.4.3 Abrasives
- 7.4.4 Brushes
- 7.4.5 Cleaning Solvents

7.5 Employer-Provided Tools and Equipment

Learning Objectives

Information in this chapter will enable you to:

- Explain how to use various hand tools.
- Select the appropriate hand tool for a specific task.
- Select the appropriate power tool for a specific task.
- Monitor temperature with various thermometers.
- Identify different types of fastening methods and devices.
- Compare cleaning methods and the use of various solvents.
- Identify basic supplies needed on a typical installation or service call.
- Follow approved safety procedures.

Technical Terms

abrasives
adjustable wrench
bolt
box end wrench
cap screw
center punch
cleaning solvent
cold chisel
combination (slip-joint) pliers
cracking
diagonal pliers
double-cut file
drift punch
file
flare nut wrench
gasket
hacksaw
hammer
hex key wrench
level (orientation)
level (tool)
lineman's pliers
machine screw
mallet
manometer
open end wrench
pin punch
pipe wrench
pliers
plumb
prick punch
punch
refrigeration service valve wrench
screwdriver
single-cut file
socket wrench
thermometer
torque wrench
twist drill bit
vise
wrench

Introduction

The tasks involved in HVACR work encompass those of a number of trades. This requires the use of a variety of tools, instruments, and supplies. General hand tools are required for mechanical work. Electrical instruments, pressure gauges, and heat-sensing instruments are needed for electrical, pressure, and temperature measurements. Sheet metal tools are necessary for assembling ductwork. This chapter will cover the tools, instruments, and supplies most commonly used in HVACR work.

Video

- Basic Tools and Instruments

Thinking Green

Tool and Equipment Care

A service technician relies on his or her instruments to provide a reliable and accurate snapshot of the condition of the system being serviced. If an instrument is in poor working condition or is out of calibration, the service technician will be unable to accurately measure the system conditions. Therefore, the technician will be unable to ensure that the system is functioning at maximum efficiency. Similarly, tools and equipment that are in poor condition can result in improper repairs and increased waste.

7.1 Hand Tools

The HVACR technician performs work chiefly with hand tools. To be successful, the technician must choose quality tools, use them properly, and take care of them. Many service failures can be traced to poor hand tool skills.

Compared to an automobile engine, refrigeration equipment is relatively light. It can easily be damaged by abuse or carelessness. Great care is necessary to avoid damaging refrigeration units. This section provides useful suggestions for the selection, care, and use of hand tools.

7.1.1 Wrenches

Most refrigeration and air conditioning work requires the use of various types of wrenches. A ***wrench*** is a hand tool with fixed or movable jaws that can be used to grip or turn nuts, bolts, or other objects.

Caution

Proper Size and Application

Many fasteners and HVACR system parts are copper or brass, which are soft metals. Be sure to use the proper size and type of wrench on soft metal parts to avoid deforming or destroying them.

Use wrenches properly so that they fit completely on the nut or bolt. Sockets should be inserted all the way on the nut or bolt head. A loose or worn wrench may slip and round off the corners on nuts or bolts. Proper servicing then becomes impossible without replacing the ruined part.

Safety Note

Proper Wrench Usage

Always pull on a wrench rather than push on it. Otherwise, the sudden loosening of the nut or bolt may result in a serious hand injury.

Corresponding Wrench and Bolt Sizes

Nominal Bolt Size	Wrench Size
1/4″	7/16″
5/16″	1/2″
3/8″	9/16″
7/16″	5/8″
1/2″	3/4″
9/16″	13/16″
5/8″	7/8″
3/4″	1″

Goodheart-Willcox Publisher

Figure 7-1. This table matches wrench openings with standard bolt heads and nuts.

The table in **Figure 7-1** shows what size wrench will fit the most common bolt and nut sizes. Below 1/2″ bolt size, the wrench size is 3/16″ larger than the bolt size. A 1/4″ bolt uses a 7/16″ wrench size (1/4″ + 3/16″ = 7/16″). At 1/2″ bolt size and larger, the wrench size is 1/4″ larger than the bolt size. For example, on a 5/8″ bolt, a 7/8″ wrench size is needed (5/8″ + 1/4″ = 7/8″). The size of the wrench opening (across the flats) is marked on the wrench.

Caution

Wrench Leverage

Avoid pounding on a wrench to obtain greater turning force or *torque*. Avoid using a length of pipe or another wrench for more turning force or torque. The extra torque could damage the fastener, the wrench handle, or the wrench head. If a fastener is frozen, use a larger wrench. Apply penetrating oil to the joint if there is corrosion.

Technicians should have a complete set of both standard and metric wrenches in their service vehicle. However, in HVACR work, some fastener sizes are more common than others. Technicians can put together a service tool kit that contains only the most commonly required tools, which they can carry from room to room. The other tools can be left in the service vehicle until needed.

The following are the wrenches a service technician is most likely to need:

- Set of 3/8″ drive sockets (12-point, 7/16″ to 1″), with 3/8″ drive torque handle, speed handle, swivel handle, and T-handle.
- Adjustable wrench (8″).

Copyright Goodheart-Willcox Co., Inc.

- Set of Allen wrenches.
- Refrigeration service valve ratchet wrenches (3/16″, 7/32″, and 1/4″) with square openings.
- Set of 15° open-end wrenches (1/2″, 3/4″, 7/8″, and 1″).
- Box end wrench (1/2″).
- T-socket wrench (1/2″).

Wrenches should be made of good alloy steel and should be properly heat-treated. They should be accurately machined and ground to fit the nut or bolt head. The wrench should fit the nut or bolt head tightly, so that as much of the surface area of the wrench contacts as much of the nut or bolt surface area as possible. For these reasons, the following list of wrench types are arranged in the order of preferred use:

1. Socket wrenches.
2. Box end wrenches.
3. Open end wrenches.
4. Adjustable wrenches.

Socket Wrenches

A ***socket wrench*** consists of a handle with a socket head on one end. The socket head has a ratcheting square shaft that can hold a variety of sockets. If the handle is turned in one direction, the shaft and socket turn with the handle to tighten or loosen the nut or bolt. If the handle is turned in the other direction, the handle moves freely but the shaft and socket do not move. This ratcheting function allows the handle to be repositioned without turning the fastener, making the wrench useful in tight places where rotating the wrench 360° is not possible. A button or lever switch on the socket head can reverse the direction of rotation.

If a nut or bolt head has enough room around it, a 6-point socket is the best socket to use. Twelve-point sockets have slightly thinner walls and can sometimes fit where there is not enough clearance for a 6-point socket. Socket wrench handles have a 1/4″, 3/8″, or 1/2″ square drive, or shaft. The handles come in a variety of designs, as shown in **Figure 7-2**.

Some sockets are designed to hold a loose fastener securely inside the socket. This prevents the nut or screw from falling out during alignment and initial threading. This feature is very useful, since a dropped nut or screw may be difficult to retrieve.

Metric-size nuts and bolts require metric-size wrenches. **Figure 7-3** shows a set of metric 6-point sockets commonly used when working with metric-size nuts and bolts. The size marked on the socket corresponds to the diameter of the cap screw or bolt. It is not the distance across the flats as it is with fractional-inch wrenches.

Klein Tools, Inc.

Figure 7-2. This is a typical set of socket wrenches and handles.

Copyright Goodheart-Willcox Co., Inc.

Klein Tools, Inc.

Figure 7-3. Metric-size sockets. The size marked on each socket corresponds to the diameter in millimeters (mm) of the bolt or cap screw.

A variation of the socket wrench is the nut driver. A nut driver is a small direct-drive socket wrench, **Figure 7-4**. The most commonly used nut driver sizes are 1/4″, 5/16″, and 3/8″ because they fit most unit panels and motor end bell bolts. Though some have handles that can be fitted with assorted socket heads, many have fixed heads. These nut drivers look like screwdrivers that have a socket head instead of a screwdriver tip.

Box End Wrenches

A ***box end wrench*** is a type of wrench that has an enclosed gripping head that is placed around a nut or bolt. Often, a box end wrench (also called a *box wrench*) can be used in tight spaces where a socket wrench cannot fit. Box end wrenches are usually 12-point and provide a powerful, non-damaging grip on the nut or bolt, **Figure 7-5**. Socket wrenches are the safest, but box end wrenches are the next safest. Box end wrenches are less likely to slip than open end wrenches.

Klein Tools, Inc.

Figure 7-4. Fixed-head nut drivers are often available in sets with a range of commonly used sizes. Note how the nut drivers are color coded by size to make selecting them from a tool kit easier.

Snap-On Inc.

Figure 7-5. These alloy steel box end wrenches have 12-point ends. Both ends are offset (double offset) to provide gripping or swinging clearance around the mechanism.

Box end and socket wrenches are easier to position on the fastener if they are double broached (12-point). **Figure 7-6** illustrates both 6-point and 12-point box end wrenches. A 12-point socket is easier to use if the handle must be operated in a small or restricted space. A 6-point socket is best for worn hex nuts or bolts. This is because a 6-point socket or box end has thicker wrench walls and applies force over a greater surface area than a 12-point wrench.

Box end wrenches may be straight, offset, or double offset. Most box end wrenches are double-ended. Both ends may be the same size with one end offset,

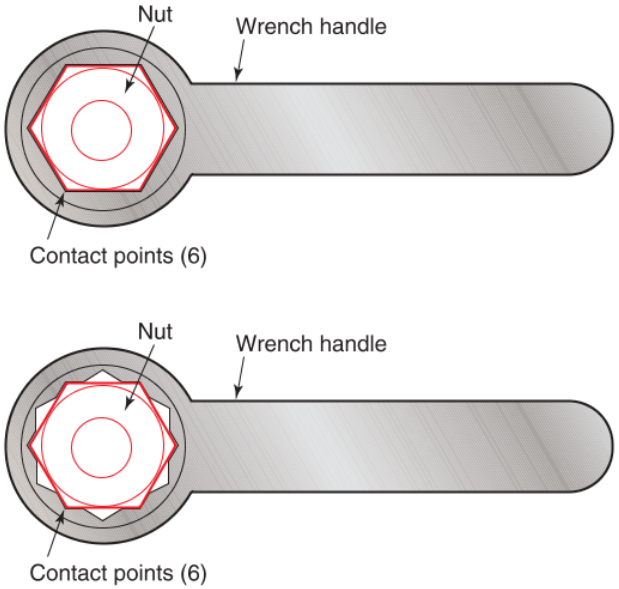

Goodheart-Willcox Publisher

Figure 7-6. Box end wrenches as they appear fitting over hex nuts. The upper wrench is a 6-point box end. The lower wrench is a 12-point box end. Note that the 6-point wrench has more surface area contact on the 6-point nut.

Copyright Goodheart-Willcox Co., Inc.

or they may be different sizes. Box end wrenches having both flat and 15° offset handles are necessary for a complete tool kit.

Open End and Combination Wrenches

An ***open end wrench*** is a type of wrench that has a gripping head with an opening so the head can be slid on the nut or bolt head from the side. These wrenches are used in close spaces and on unions, where socket wrenches and box end wrenches cannot be used, **Figure 7-7**.

Open end wrenches with jaws that are spread or that have burrs should not be used for refrigeration work. Open end wrenches used in servicing work should have thick jaws. Thin wrench jaws have a tendency to bite into soft brass and copper parts.

Another popular type of wrench used in refrigeration work is the combination wrench. Typically, both ends of a combination wrench are the same size, **Figure 7-8**.

Adjustable Wrenches

Odd-size nuts and bolts are often found in refrigeration work. Therefore, wrenches with adjustable jaws are necessary in a tool kit. An ***adjustable wrench*** is a wrench with gripping jaws that can be moved to form the desired size opening, **Figure 7-9**. Force should be applied to an adjustable wrench in the proper direction. This causes the movable jaws to press against the wrench body, thus tightening the grip on the nut or bolt head.

Safety Note

Adjustable Wrench Fit

Adjustable wrenches must be kept in good repair. If a wrench does not fit tightly, it may slip and result in a ruined wrench, a bruised hand, or a deformed nut or bolt head.

Klein Tools, Inc.

Figure 7-7. This is a typical open end wrench. Each end has a different sized head.

Klein Tools, Inc.

Figure 7-8. A combination wrench has an open end head and a box end head. It has the same size head on both sides.

Reed Manufacturing Co.

Figure 7-9. With an adjustable wrench, the handle should be pulled as shown by the direction of the arrow on the handle. The red arrows around the head show the pressure of the wrench against the corners of the nut. Turning the wrench in the direction shown tends to press the movable jaw against the wrench body, thus tightening the grip.

Pipe Wrenches

Pipe wrenches are wrenches designed to grip pipes, studs, and other cylindrical (round) surfaces. The greater the torque on the wrench handle, the tighter the wrench will grip the object. Pipe wrenches should not be used on nuts or bolt heads, **Figure 7-10**.

An internal-type pipe wrench, **Figure 7-11**, may be used for installing pipes, nipples, or fittings. A chain wrench is another type of adjustable pipe wrench. It can be used on square, round, or irregular shapes. An advantage of the chain wrench is that it can be used in confined areas. Another variation is the strap wrench, which uses nylon to grip the pipe, **Figure 7-12**.

Reed Manufacturing Co.

Figure 7-10. Note the ridges along the gripping surface of these pipe wrenches.

Copyright Goodheart-Willcox Co., Inc.

Reed Manufacturing Co.

Figure 7-11. Internal pipe wrenches, like this one, grip the pipe from the inside.

Flare Nut Wrenches

A ***flare nut wrench***, as shown in **Figure 7-13**, is similar to an open end wrench, but has a smaller opening in the gripping head. Flare nut wrenches are used to tighten and loosen flare nuts with SAE fittings. Forged flare nut sizes are an SAE standard used in automotive, marine, and refrigeration service. A flare nut wrench can be slipped over the tubing to reach the flare nut. A box end wrench cannot do this. An open end wrench could be used, but a flare nut wrench grips the nut better, reducing the risk of damaging the nut. Other types of flare nut wrenches, such as open ratcheting wrenches, are also available.

Snap-On Inc.

Figure 7-13. Flare nut wrenches are used when turning SAE flare nuts.

Hex Key and Torx® Wrenches

Hex key wrenches are small hand tools with differently sized hexagonal shafts that grip matching hexagonal indents in the heads of screws. These wrenches are typically constructed of alloy steel with a hexagonal (six-point) tip. A common type of hex key wrench is a fold-up tool with many key sizes in one handle. Individual L-keys and T-handle hex keys are frequently used for long-reach operations, such as setscrews on pulleys. Be aware that hex keys are also sometimes called *Allen wrenches*.

Another type of wrench similar to the hex key wrench is the Torx® wrench, which has a star-shaped shaft. The star shape provides a greater contact area and distribution of pressure than the hex shape. This means the technician is less likely to damage the screw or wrench when trying to loosen or tighten a fastener. Several types of key sets are shown in **Figure 7-14**.

Chain Wrench **Strap Wrench**

Reed Manufacturing Co.

Figure 7-12. Two other types of adjustable pipe wrenches.

Copyright Goodheart-Willcox Co., Inc.

Hex Key Wrench Set

Torx Key Wrench Set

T-Handle Hex Key Set

L-Style Hex Key Set

Klein Tools, Inc.

Figure 7-14. Key wrenches are available in a variety of styles.

Refrigeration Service Valve Wrenches

Refrigeration service valves are different from other valves. They often have stems with a square end milled on the valve shaft or have a hex opening. A ***refrigeration service valve wrench*** is needed to turn a service valve's stem. Service valves come in different sizes depending on the size of the unit, **Figure 7-15**.

Some service valve wrenches have one ratcheting end and one fixed end. Wrenches with two ratcheting ends often have a feature allowing the technician to lock the ratcheting mechanism, so it can be used as a fixed wrench.

Pro Tip

Cracking Service Valves

When cracking open valves, use only the fixed or locked end of a service valve wrench. ***Cracking*** is the slight opening required to cause the valve needle or plunger to leave its seat. This allows only a very slow flow of refrigerant. The fixed end of the wrench allows a technician to control the slight opening and closing of a valve. For rapid opening and closing of valves, the ratchet end may be used.

Ritchie Engineering Co., Inc. – YELLOW JACKET Products Division

Figure 7-15. Refrigeration service valve wrenches often have a different size head on each end of the wrench to accommodate the various sizes used on HVACR systems.

Some refrigeration service valve wrenches have a reversible ratchet, **Figure 7-16**. The operator can reverse the direction of turning without removing the wrench from the stem. These wrenches are often used to open or close a compressor access valve. They may also be

Copyright Goodheart-Willcox Co., Inc.

Bacharach, Inc.

Figure 7-16. Reversible ratchet service valve wrenches may have different size and shape openings on each end. The top has a 1/2″, 6-point socket opening and a 3/16″ square opening. The bottom has a 3/8″ square opening on one end and a 1/4″ square opening on the other end.

used to tighten or loosen a nut or bolt by changing the reversible ratchet.

Many manufacturers use valve stems other than the 1/4″ square. Some valve stems are made so that the milled end is inside the valve body. To accommodate these valves, adapters are available in various sizes. The male or drive part of the socket is usually 1/4″ square. There are a few that use a larger drive (9/32″). The sockets that fit the valve stem come in five sizes: 3/16″, 7/32″, 1/4″, 5/16″, and 3/8″, **Figure 7-17**.

Torque Wrenches

All materials are somewhat elastic (stretchable, compressible, and twistable). Even cast iron and hardened steels used in the construction of compressors are elastic up to a point. When tightening bolts, nuts, and other attachments on compressor parts and assemblies, it is important to apply a turning force (torque) that will provide the proper amount of tightness. Otherwise, warpage or other part damage may occur. To measure and regulate the amount of tightness, a torque wrench is used, **Figure 7-18**.

Ritchie Engineering Co., Inc. – YELLOW JACKET Products Division

Figure 7-17. Refrigeration service valve wrenches use adapters to operate service valves with hex openings.

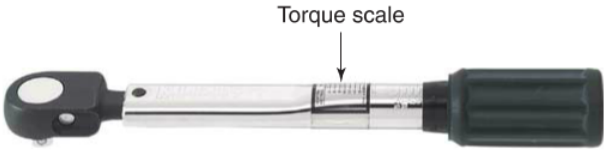

Klein Tools, Inc.

Figure 7-18. Torque wrenches are used to measure the amount of tightness being applied to nuts and screws.

Torque wrenches are usually only wrench handles with a pressure gauge. They are used with sockets of different sizes. On the handle is a pressure gauge with a dial or pointer, which measures the foot-pounds or inch-pounds of torque.

The manufacturers of HVACR equipment determine the proper torque that should be applied to the various fasteners in their products. The recommended torques for the many parts in a refrigeration system are specified in manufacturer service manuals.

To use a torque wrench, the operator fits the proper sized socket onto the wrench. The socket is then applied to the nut, and the handle of the wrench is pulled until the indicator shows that the required torque has been applied. At that torque, the nut is at the tightness recommended by the manufacturer.

7.1.2 Hammers and Mallets

A ***hammer*** is a hand tool consisting of a long handle attached to a hard head used for pounding or striking. It is important that the hammerhead be firmly fastened to the handle. The handle must also be in good condition.

Hammers are available in a wide variety of designs, and a refrigeration technician will need to use several different types on a regular basis. Most technicians will include a 12- or 16-ounce ball peen hammer in their tool kits. A claw hammer may also be needed for mounting pipe supports and fastening sheet metal to wood. See **Figure 7-19**.

Pro Tip

Hammer Usage

Below are some tips for using a hammer in HVACR work:

- Grasp the handle about two-thirds of the way back from the head.
- For light, accurate blows, hold the hammer with the index finger on the top of the handle and use wrist action.
- For heavy blows, hold the hammer with fingers around the handle and use elbow muscles.

Copyright Goodheart-Willcox Co., Inc.

Klein Tools, Inc.

Figure 7-19. Two types of hammers commonly used by HVACR technicians. A—A ball peen hammer. B—A standard straight-claw hammer.

A ***mallet*** is a type of small hammer used for safely striking parts. In service work, a mallet is often needed to drive parts into place or to separate them without damaging their surfaces. For such work, a 1 1/2-lb to 2-lb mallet is desirable. Mallets are made of rawhide, rubber, wood, plastic, or lead. See **Figure 7-20**.

7.1.3 Pliers

Pliers are multipurpose hand tools that are often used for bending, gripping, and cutting. They are made of alloy steel, usually with manganese, although some are chrome-vanadium steel. Top-quality pliers are usually drop forged. Many different types are available, as described below.

Common Gripping Pliers

Combination (slip-joint) pliers are size-adjustable pliers that are handy for general use, **Figure 7-21**. However, they should not be used on nuts, bolts, or fittings. They can slip and damage the surface. A variation on slip-joint pliers is tongue-and-groove pliers, **Figure 7-22**. Tongue-and-groove pliers are similar though they are often larger and may have angled heads or rounded jaws.

Klein Tools, Inc.

Figure 7-20. A mallet is often used to drive or separate parts.

Klein Tools, Inc.

Figure 7-21. By shifting the pivot point on slip-joint pliers, the size of the span of the jaws is adjusted.

Cutting Pliers

Cutting pliers are pliers with jaws that can be used for cutting various materials. These are mostly used when working on electrical tasks. One type of cutting pliers, called ***lineman's pliers***, is a powerful cutting and gripping tool, **Figure 7-23**. Another type, called ***diagonal pliers***, has jaws angled for use in close quarters for a nearly flush cut. See **Figure 7-24**. The different types of cutting pliers are usually insulated to protect the technician when working on electrical parts.

Klein Tools, Inc.

Figure 7-22. Like slip-joint pliers, tongue-and-groove pliers are size adjustable by changing the pivot point along different grooves.

Klein Tools, Inc.

Figure 7-23. Lineman's pliers function as cutting pliers and gripping pliers.

Klein Tools, Inc.

Figure 7-24. These diagonal cutting pliers are useful for electrical work in tight places.

Copyright Goodheart-Willcox Co., Inc.

Special Pliers

End-cutting pliers, duck bill pliers, and long-nose pliers are frequently used in hard-to-reach places, **Figure 7-25**. Round-nose pliers are used to shape wire into loops and to bend sheet metal edges. These pliers are usually insulated, as they are often used when working on electrical jobs.

7.1.4 Screwdrivers

A ***screwdriver*** is a hand tool consisting of a handle, shaft, and head with a sized and shaped tip, used for turning screws. See **Figure 7-26**. A complete set of screwdrivers is necessary for both HVACR installation and shop work. The length of a screwdriver is measured from the blade tip to the handle. Handles are not included in the measurement. The recommended average sizes are 2 1/2″, 4″, 6″, and 8″.

The types of screwdrivers are named for the shape of the blade or bit. See **Figure 7-27** for a variety of screw openings and matching screwdriver bits. One of the most common screwdrivers is the slotted or straight blade. The screwdriver bit should fit the screw slot snugly. The blade should be wide enough to fill the screw slot end-to-end.

Klein Tools, Inc.

Figure 7-26. A screwdriver set typically includes screwdrivers of different sizes and head tips, such as slotted and Phillips.

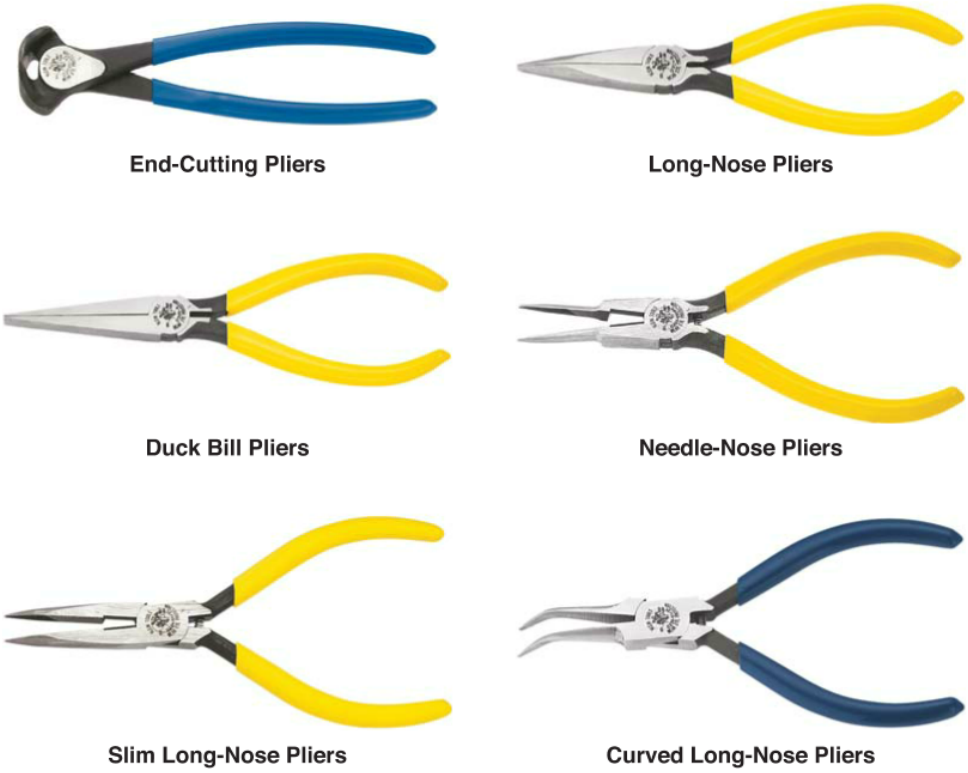

Klein Tools, Inc.

Figure 7-25. Specialty pliers are manufactured for use in specific applications, such as in areas that are difficult to reach.

Copyright Goodheart-Willcox Co., Inc.

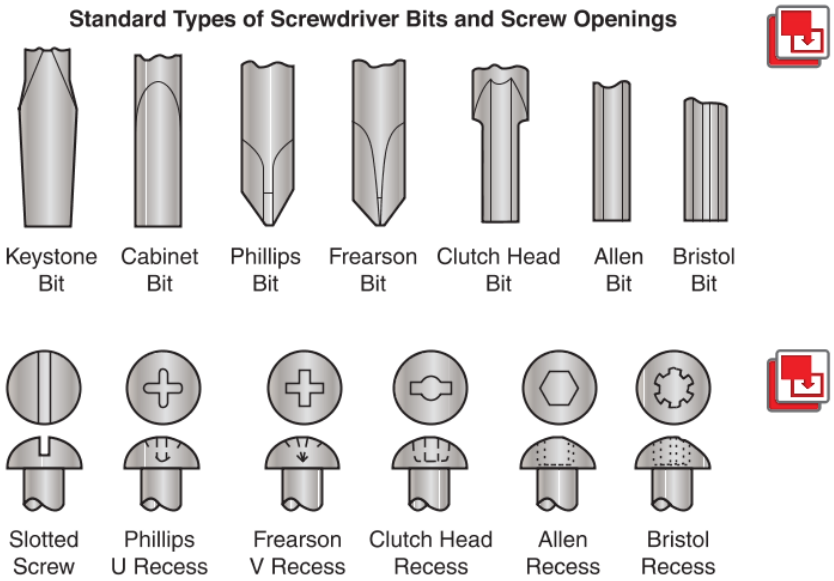

Goodheart-Willcox Publisher

Figure 7-27. These common types of screw heads may be found on refrigeration equipment. The corresponding screwdriver bits are shown above each screw head.

The Phillips screwdriver has a tip that fits a recessed cross in the head of the screw. Phillips screwdrivers are available in the 3″ size for No. 4 and smaller screws, the 4″ size for No. 5 to No. 9 screws, the 5″ size for No. 10 to No. 16 screws, and the 8″ size for No. 18 screws and larger.

Better quality screwdrivers have strong handles firmly bonded to the blade. Plastic handles are popular. Some screwdrivers may be equipped with a clip that holds screws while starting them. Other specialty styles of screwdriver include stubby and offset, **Figure 7-28**. Stubby (short) screwdrivers are available

A B

Milwaukee Electric Tool Corp.; Klein Tools, Inc.

Figure 7-28. Specialty screwdrivers. A—Stubby screwdrivers are used in tight spaces. B—Offset screwdrivers are often required to access inconveniently located screws.

Copyright Goodheart-Willcox Co., Inc.

for working in small spaces. An offset screwdriver is necessary in refrigeration work. There are many places where an offset screwdriver is the only tool capable of turning a hard-to-reach screw.

Caution

Safe Screwdriver Use

Each job has a proper tool. For instance, never use a screwdriver as a chisel by pounding on it with a hammer. For electrical work, especially in confined areas, use screwdrivers with insulated shafts.

7.1.5 Vises

A sturdy machinist's vise is necessary in the shop and helpful in the field. A ***vise*** is a clamping apparatus that opens and closes using a screw mechanism. A vise is particularly convenient for holding parts while drilling, filing, or assembling, **Figure 7-29**.

One vise should be large enough to hold most compressor bodies. A special pipe vise, which has a hacksaw blade slot, is useful for a large service shop. This blade slot allows accurate cutting of piping and tubing.

When clamping parts that must not be marred, such as copper tubing, brass fittings, and valve bodies, make sure the contact areas of the vise jaws are made from a soft material. Many vises have jaw pad inserts that can be installed as needed. These inserts can be made of copper, brass, aluminum, rubber, or plastic and can be screwed into the jaw faces. Covers that slip over the jaws are also available in a variety of materials, **Figure 7-30**.

7.1.6 Twist Drill Bits

Twist drill bits are frequently used for installation and repair work. The term *twist drill bit* refers to the method by which the drill bit flutes are manufactured. Drill bit designs are available for working with metal, wood, plastic, and masonry. A twist drill bit may be turned by a drill press, portable electric drill, or cordless drill.

Most commonly, twist drill bits have straight shanks. This means that the section gripped by a three-jaw chuck is straight and cylindrical in shape. See **Figure 7-31**. The shank of a twist drill bit carries a stamped identification giving the kind and size of the drill bit. Twist drill bits may be made from high carbon steel or from alloy steel for high-speed use.

Most twist drill bits have two cutting edges or "lips." These edges must be sharp and equal in length. They must also have proper clearance and rake angles for the material being drilled. See **Figure 7-32**. Twist drill bits also have flutes, which remove chips from the hole.

Reed Manufacturing Co.

Figure 7-29. A vise like the one shown can be used to hold parts for cutting, drilling, or filing.

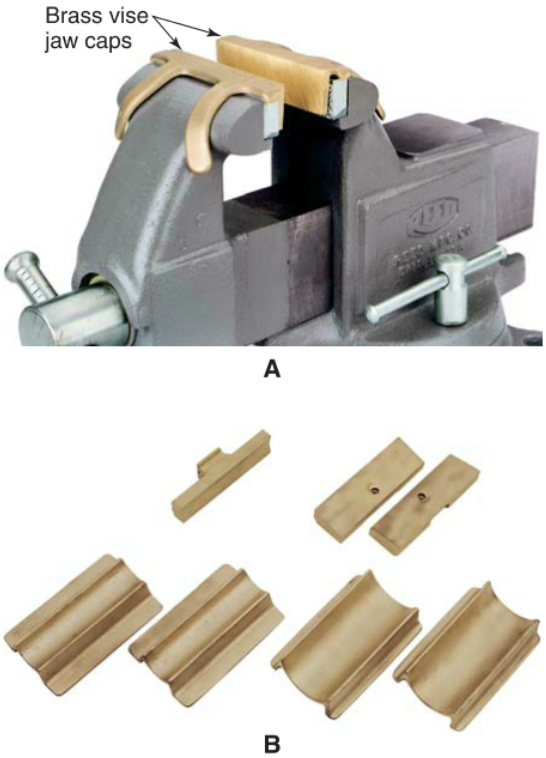

Reed Manufacturing Co.

Figure 7-30. A—This vise has brass jaw caps installed over its regular jaws. B—These vise jaw caps are used when holding a tube or pipe.

Klein Tools, Inc.

Figure 7-31. A straight-shank twist drill bit used on metal.

Copyright Goodheart-Willcox Co., Inc.

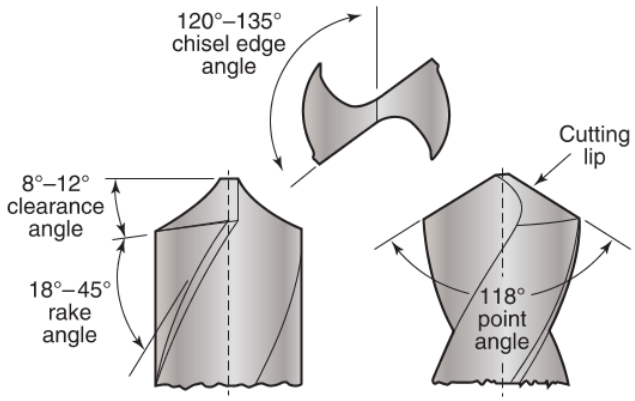

Kennametal, Inc.

Figure 7-32. Note the angles and shapes of this twist drill point correctly ground for steel. The clearance angle shown (8″–12″) is found on drill bits in the 1/2″ range. As diameters are reduced, clearance angles increase. A 1/16″ diameter twist drill should have a clearance angle of about 20″.

To ensure that the drill bit forms the correct size hole, both cutting lips must be exactly the same length and angle. If one lip is longer, the hole being drilled will be oversize. If one lip has a smaller angle, it will do all the cutting and soon grow dull.

Drilling speed depends on the type of material being drilled and the diameter of the hole. In general, the smaller the twist drill bit is, the faster it should be turned. Always be sure the drill bit is actually cutting as it turns. If the cutting edges are just rubbing against the stock, they will quickly heat up. Overheating will destroy the hardness of the drill bit.

Drill Bit Sizes

Drill bits are sized by the diameter of the finished hole that they create. Those intended for working with metal come in three different set sizes. Identification systems for sizes include fractional numbers, whole numbers, and letters. See the *Appendix*. Fractional sizes come in sets from 1/16″ to 1/2″ in steps of 1/64″. Larger sizes are also available. Numbered sets begin with No. 1 and range through No. 80 (0.228″–0.0135″). The higher the number, the smaller the drill bit. No. 1 through No. 60 are the most commonly used sizes. Letter size twist drill bits range from "A" (0.234″) to "Z" (0.413″). Number and letter twist drill bit sets are often used as tap drills to make holes for inside threads. They provide a greater range of sizes than the fractional bits.

Tap Drill Sizes

A tap drill should be slightly larger than the inside diameter of the threads for which the hole is being drilled. Always refer to tap-drill size tables for the correct size drill. For most refrigeration and air conditioning work, the tap drill table in **Figure 7-33** is satisfactory.

Common Tap Drill Sizes

Tap	Tap Drill	Tap	Tap Drill
4/36	No. 43	14-20	No. 9
	No. 44		No. 10
	No. 45		No. 11
4-40	3/32	14-24	No. 6
	No. 43		No. 7
	No. 44		No. 8
4-48	No. 41	1/4-20	No. 5
	No. 42		No. 6
5-40	No. 37		13/64
	No. 38		No. 7
	No. 39		No. 8
5-44	No. 36	1/4-28	7/32
	No. 37		No. 3
	No. 38	5/16-18	17/64
6-32	No. 33		G
	No. 34		F
	7/64	5/64-24	J
	No. 36		I
6-40	No. 32	3/8-16	O
	No. 33		5/16
8-32	No. 29	3/8-24	R
8-36	No. 28		Q
	No. 29	7/16-14	3/8
10-24	No. 24		U
	No. 25	7/16-20	25/64
	No. 26		W
10-32	No. 19	1/2-13	27/64
	No. 20	1/2-20	29/64
	No. 21	9/16-12	31/64
	No. 22	9/16-18	33/64
12-24	No. 15	5/8-11	17/32
	No. 16	5/8-18	37/64
	No. 17	3/4-10	21/32
12-28	3/16	3/4-16	11/16
	No. 13		
	No. 14		
	No. 15		

Outside diameter

Number of threads per inch

Goodheart-Willcox Publisher

Figure 7-33. These are the tap drill sizes recommended for common tapping operations. Note that for certain sizes the tap drill may be a fractional-inch size, a number size, or a letter size.

Copyright Goodheart-Willcox Co., Inc.

Caution

Tap Drill Holes

It is very important that the hole to be tapped is first drilled to the correct size. If the hole is oversized, the threads will not be full size. If the hole is undersized, the tap must remove too much metal and will probably break. See **Figure 7-34**.

Hole Saws

Installation, retrofits, and repair work in HVACR may require technicians to drill holes through walls of different material. Such jobs often require the use of hole saws, **Figure 7-35**. Hole saws are often available in sets with a variety of sizes for different applications.

Milwaukee Electric Tool Corp.

Figure 7-35. This electric drill is fitted with a hole saw.

7.1.7 Cold Chisels

A ***cold chisel*** is a narrow metal tool with a beveled edge for cutting through various materials, **Figure 7-36**. As an example, you may find a corroded fastener that must be removed from an evaporator. A cold chisel can be used to cut the fastener. A 3/4″ flat cold chisel is a size used by many HVACR technicians.

Klein Tools, Inc.

Figure 7-36. A cold chisel can be used to cut through metal fasteners that cannot be loosened.

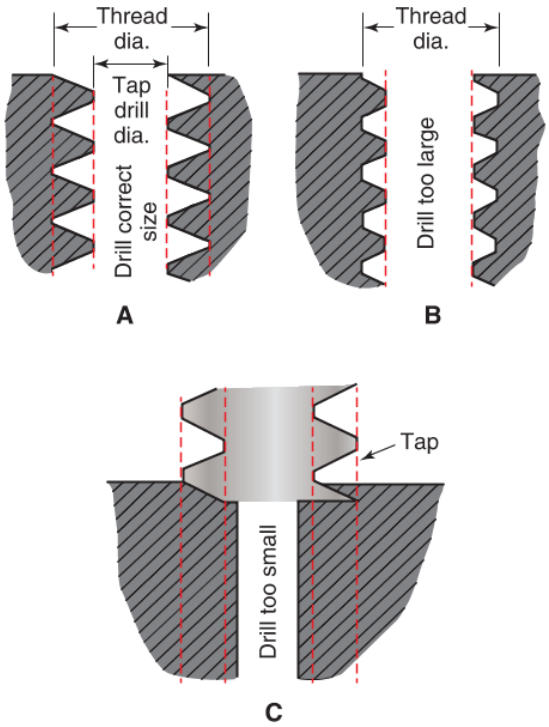

Goodheart-Willcox Publisher

Figure 7-34. Hole size is important when tapping threads in metal. A—Tap drill correct size, correct thread depth. B—Tap drill too large, threads not full depth. C—Tap drill too small, tap likely to break.

Safety Note

Mushrooming

Be sure to keep the head (hammering end) of the chisel free from "mushrooming." Flying pieces of metal from a mushroomed head may cause injuries.

7.1.8 Punches

The term ***punch*** refers to a broad category of cylindrical tools used for a variety of functions, including marking metal, punching holes in material, and driving out pins. They are available in various lengths and are usually made of heat-treated, chrome-alloy steel. The cutting edge or point is hard, while the head is tough and shatterproof. Always grind away any mushroom head that forms. A fairly heavy 6″ punch will be the most useful for HVACR work. A variety of shapes are available. There are four common types of punches: center punch, drift punch, pin punch, and prick punch.

Safety Note

Eye Protection

Always wear safety goggles or a face shield when working with chisels or punches.

Copyright Goodheart-Willcox Co., Inc.

A ***center punch*** is used for center punching the location of a hole to be drilled. A heavy blow on the punch makes a depression in which a drill can be started without the bit sliding around. A center punch can also be used to make alignment marks on refrigeration parts before dismantling. It has a 60° to 90° point.

The most commonly used punch is an automatic center punch. An automatic center punch performs the same function as a standard center punch, but does not require the use of a hammer. It has an internal spring-loaded mechanism that stores energy as the punch is pushed against a surface. When the punch is fully depressed, the spring-loaded mechanism releases all of its energy to deliver a single blow to the center point of the punch. This has the same effect as a hammer blow on a standard punch.

A ***drift punch*** is used to drive out keys and to line up holes in mating surfaces. The punch tapers from its flat point to the stock diameter. A ***pin punch*** is used for driving retainer pins in or out. The blunt end is called the bill. Pin punches are measured in overall length, by diameter of the stock, and by diameter of the bill. Pin punch bill diameters are available from 3/32″ to 5/16″. The ***prick punch***, or scratch awl, has a long, sharp point and is used only for layout work. Be careful not to damage this sharp point. See **Figure 7-37** for a comparison of the different types of punches.

7.1.9 Files

Files are hand tools with cutting ridges, or teeth, used to clean and shape metal surfaces. Various sizes and types are needed for different metal parts. Files are classified according to tooth size, tooth shape, and tooth pattern. ***Single-cut files*** have teeth cut in one direction. ***Double-cut files*** have teeth cut in two directions, **Figure 7-38**. Single-cut files are used for finishing surfaces, and double-cut files are used for fast metal removal.

Files typically come in 4″, 6″, 8″, 10″, and 12″ lengths, but larger files do exist. The sizes of the teeth vary and are available as dead smooth, smooth, second cut, bastard, rough, and coarse. The larger the file of a given type, the coarser the teeth will be. Thus, a second cut 12″ file has coarser teeth than a second cut 6″ file.

Many file shapes are available. They include rectangular, half round, round, triangular, square, wedge shape, and so on. See **Figure 7-39**.

File shapes are available in three types of rectangular cross-section: mill, hand, and flat. The mill file has only single-cut teeth. It is uniform in thickness but

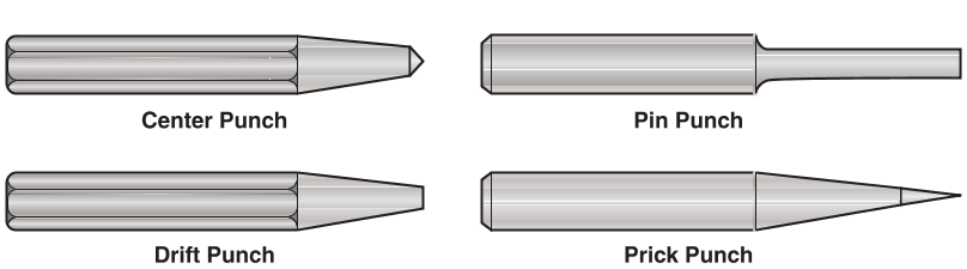

Goodheart-Willcox Publisher

Figure 7-37. Various types of punches are shown here.

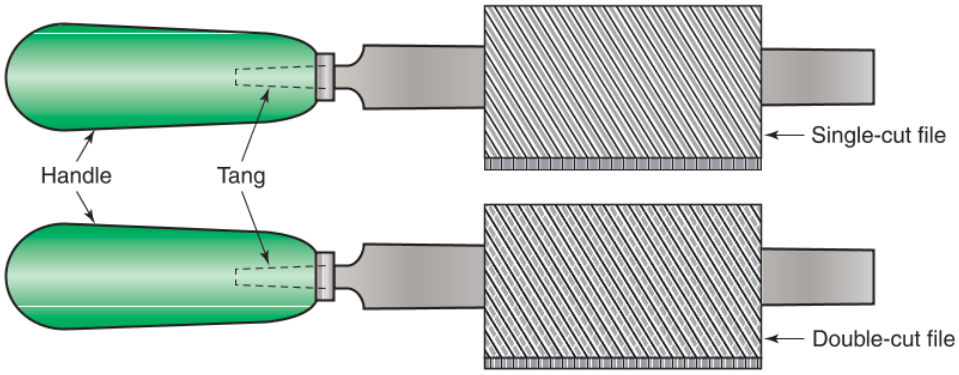

Cooper Tools, Nicholson

Figure 7-38. Hand files may be either single-cut or double-cut. Files should always have handles to avoid hand injuries.

Copyright Goodheart-Willcox Co., Inc.

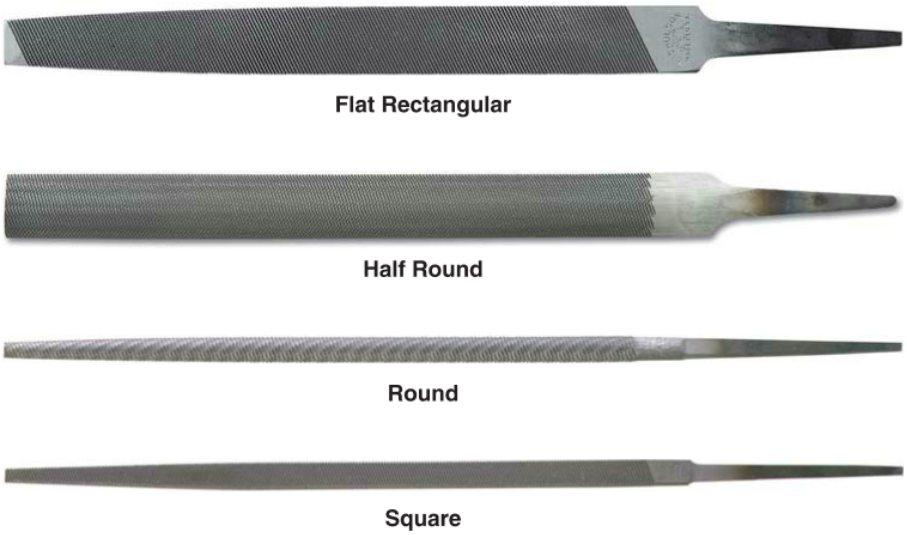

Cooper Tools, Nicholson

Figure 7-39. Note the various file shapes.

tapers slightly in width. The hand and flat files have double-cut teeth. The edges are parallel but the thickness varies slightly. The hand file has one edge that has no teeth, called a safe edge. The flat file has teeth on all four surfaces.

Pro Tip

File Maintenance

Use file brushes and file cards to clean the file teeth, which quickly become filled with metal, **Figure 7-40**. If clogging material is not removed, the files become useless. Do not use a file card for any other purpose than file cleaning in order to prevent the bristles from becoming clogged with dirt.

7.1.10 Hacksaws

A ***hacksaw*** is used for cutting tubing and for other work requiring metal cutting. **Figure 7-41** shows a popular type of hacksaw, with a rigid frame and a 12″ blade. Blades are available with different numbers of teeth per inch. Blades with 14 teeth per inch are used for soft metal and wide cuts, 18 teeth per inch for medium soft metals, 24 teeth per inch for general work, and 32 teeth per inch for thin metal, tubing, or hard metal. A thinner or harder metal will require a blade with more teeth per inch. The type of blade, its length, and the number of teeth per inch are usually printed on a hacksaw blade.

Hacksaw blades are directional and must be assembled in the frame in the proper direction. A hacksaw blade should not be stroked faster than 60 strokes per minute. Most blades are made of high carbon steel, and their cutting edges (points) are very sharp and very small. Cutting too rapidly will cause these points to overheat and lose their tempered hardness.

Cooper Tools, Nicholson

Figure 7-40. Keep files clean by using a file brush.

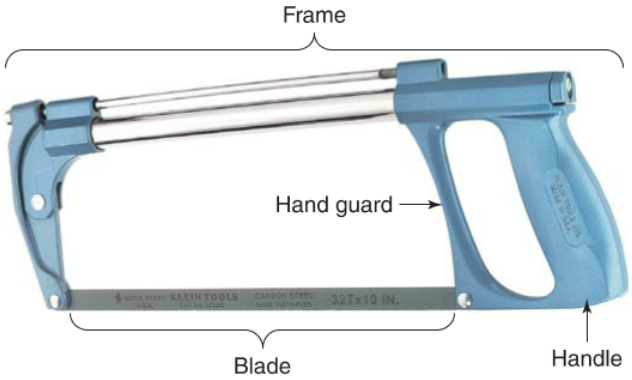

American Saw & Mfg. Company

Figure 7-41. Hacksaws usually have a rigid frame to hold the blade in proper tension.

Copyright Goodheart-Willcox Co., Inc.

Caution

Keeping Blade Teeth Sharp

Lifting the blade slightly on the back stroke will help keep the cutting edges sharp. If the blade is not lifted, chips may roll between the work and the cutting edge of the blade, dulling the teeth.

Most hacksaw blades have teeth that are hardened, while the back of the blade is soft and flexible. Such a design allows for faster, smoother cutting. This type of blade is both shock and heat resistant and is virtually unbreakable.

Special hacksaw frames are available for working in small holes and confined areas, **Figure 7-42**. There is also a stub hacksaw blade and an adapter drive to fit electric drills.

7.1.11 Levels

When installing registers, grilles, in-duct humidifiers, and other devices, it is important to make all cuts straight, level, and plumb. A ***level*** is a tool used to set a line at ***level*** (perfectly horizontal), ***plumb*** (perfectly vertical), or perfect 45° angle. Technicians will often use a spirit level, which has several small vials within the straight, long frame. Each vial is filled with a liquid that contains a bubble that moves based on the physical orientation of the level. By holding the level so that the bubble remains in the middle of the vial, the line along which the level is held can be considered straight, **Figure 7-43**.

Milwaukee Electric Tool Corp.

Figure 7-42. Compact hacksaws come in a variety of makes for different jobs.

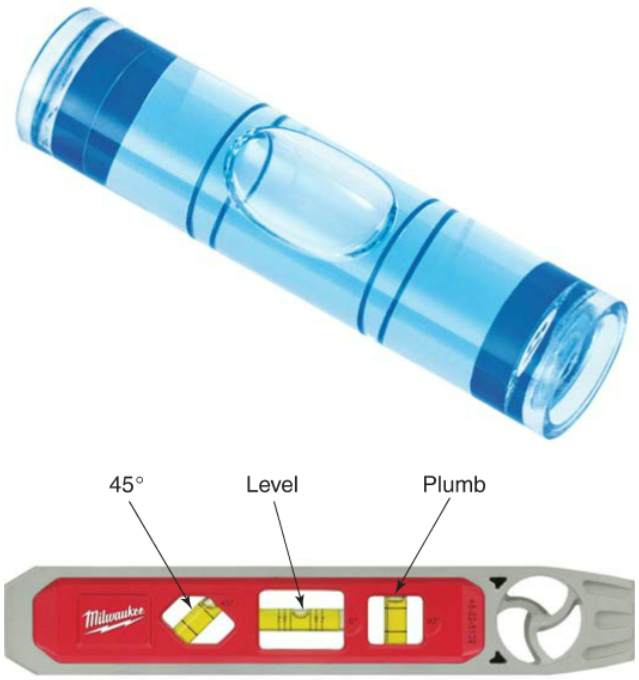

Milwaukee Electric Tool Corp.

Figure 7-43. Using a level to make all installations plumb and level shows professionalism, which customers will appreciate.

A standard level may also be called a *spirit level*, as the fluid inside each vial is often a spirit or alcohol. These liquids allow the bubble to move and react quickly to level changes. Also available are laser levels in different makes and models, **Figure 7-44**.

Milwaukee Electric Tool Corp.

Figure 7-44. Laser levels can be used in different types of installation work, much like spirit levels.

Copyright Goodheart-Willcox Co., Inc.

7.2 Power Tools

Hand tools are used throughout HVACR work on an everyday basis. However, some jobs progress more quickly or smoothly with the use of power tools. An industry as diverse as HVACR requires a variety of power tools.

Electric drills are one of the most commonly used power tools. An electric motor rotates a shaft that may be fitted with a variety of bits. Electric drills are used for installation, retrofit, and service work. When drilling into particularly hard surfaces like concrete or other masonry, it may be better to use a hammer drill, **Figure 7-45**.

Safety Note

Electrical Drill Ground

Electric drills should be grounded for safety. Most electric drills are equipped with a three-prong grounded plug. If the circuit to which the drill is connected does not have a three-prong grounded socket, a grounded adapter should be used. Some hand drills have the electric motor insulated from the case and do not need grounding. Grounding is covered further in Chapter 13, *Electrical Power*.

Close cousins of the electric drill are the impact driver and power screwdriver. These tools operate the same way as drills but for a different purpose. Drivers make the assembly and disassembly of units quick and efficient, **Figure 7-46**.

Safety Note

Eye Protection

Always wear safety glasses to protect your eyes from flying chips when using either a drill press or portable drill.

Milwaukee Electric Tool Corp.

Figure 7-45. This technician is using a hammer drill to make a hole in masonry.

Milwaukee Electric Tool Corp.

Figure 7-46. This technician is using an impact driver to quickly secure the hangers for this ductwork.

Not all holes can be cut and properly formed using hand tools or a hole saw on an electric drill. For larger holes and precise cuts, use a reciprocating saw. Though these tools can be used for a variety of jobs, reciprocating saws are especially handing when preparing to install ductwork and air registers in a building, **Figure 7-47**.

7.3 Instruments

The technician uses instruments to determine conditions, such as pressure and temperature, inside a refrigeration system. The most common instruments are thermometers and pressure gauges. Later chapters will cover specific types of pressure gauges and special instruments such as hygrometers, ammeters, voltmeters, and ohmmeters.

An instrument must be carefully handled and kept in good condition if it is to remain accurate. If its accuracy is in doubt, the instrument should be sent to a repair company for testing and calibration (adjustment).

7.3.1 Thermometers

A ***thermometer*** is an instrument for measuring temperature. In HVACR, a thermometer is often used to measure the temperature of an evaporator, liquid line, suction line, return air, or supply air. An ice water bath can be used to check a thermometer's

Copyright Goodheart-Willcox Co., Inc.

Milwaukee Electric Tool Corp.

Figure 7-47. This technician is using a reciprocating saw to cut holes for air registers in a new building.

accuracy. When its sensor is immersed in this solution, the thermometer should read within 1°F (1°C) of 32°F (0°C).

Many sizes and types of thermometers have been developed for the technician's use. Glass-stem thermometers usually read from –30°F to 120°F (–35°C to 49°C) in two-degree increments. Some thermometers have a special magnifying front built into the glass. This magnifies the liquid-filled tube for easier reading. A glass-stem thermometer tube may contain mercury or pure ethanol, toluene, kerosene, or isoamyl acetate dyed red for clarity. A mercury-filled thermometer is faster but more difficult to read.

Safety Note

Mercury Toxicity

Mercury is a highly toxic substance, which has been known to cause poisoning as a liquid and in vapor form. Use of mercury in thermometers is being phased out across the world. Extreme care should be used when using thermometers that contain mercury. For these reasons, most thermometers use another substance dyed red for clarity.

There are numerous other thermometers that are popular and easy to use. Dial stem thermometers, as shown in **Figure 7-48**, may be operated either by a bimetal strip or by a bellows charged with a volatile (vaporizes readily) fluid. Their temperature ranges vary, but they are usually from –40°F to 160°F (–40°C to 70°C) in two-degree increments.

Caution

Thermometer Limits

Never expose any type of thermometer to temperatures beyond the limits of its scale. Doing so may ruin the instrument. Also, do not allow the fluid in the thermometer to get so cold that the fluid freezes. This will cause the fluid to expand within the bulb and break the thermometer.

Although analog thermometers are still used, digital thermometers generally have a greater temperature range and accuracy. Many multimeters for HVACR work include a temperature probe attachment. This provides the service technician with the flexibility to use the multimeter to measure both electrical variables and temperatures, **Figure 7-49**.

Pro Tip

Measuring Multiple Variables

Bear in mind that when a multimeter is measuring an electrical value, it might not be able to measure temperature as well. This is when a small digital thermometer is useful. Use the multimeter to measure electrical values, such as voltage or current. At the same time, use the digital thermometer to measure temperature values, **Figure 7-50**. Meters and thermometers with clamp temperature probes attach directly to an object, such as a suction line or liquid line, to get accurate surface temperature measurements.

Sealed Unit Parts Co., Inc.

Figure 7-48. This dial stem thermometer is calibrated in 4-degree increments from –40°F to 160°F (–40°C to 70°C). This is the temperature range most used by technicians in HVACR work.

Copyright Goodheart-Willcox Co., Inc.

Milwaukee Electric Tool Corp.

Figure 7-49. This multimeter has a temperature function and probe attachment.

hilmor

Figure 7-50. This digital thermometer has two probes for two different measurements at once. This is especially useful when measuring both superheat and subcooling.

Ritchie Engineering Co., Inc. – YELLOW JACKET Products Division

Figure 7-51. This pistol-grip, handheld infrared thermometer can measure temperature from a distance. Use the laser as a sight for aiming the measurement placement.

Figure 7-51 shows how a handheld digital thermometer can be used to measure temperature on a condenser or evaporator from a distance. The temperature reading is compared to specifications for the specific type of system. **Figure 7-52** shows a minimum-maximum thermometer. This type is useful when attached to a system that is unattended for some time.

Recording thermometers or data loggers help locate malfunctions by making 24-hour or 7-day temperature records, **Figure 7-53**. Common features include the ability to record maximum and minimum temperatures at any time interval, cable connections so that the data may be downloaded to a computer or mobile device, and software that can be used to graph temperature changes over time. These instruments enable service technicians to monitor the operation of a unit for long periods of time.

The thermocouple and the thermistor are two types of temperature-sensing electronic devices commonly used in digital thermometers and control units. The fundamentals of these devices are described in Chapter 14, *Basic Electronics*.

7.3.2 Manometers

A ***manometer*** is a type of pressure gauge that measures values around atmospheric pressure. The principle of operation of the manometer is explained in Chapter 27, *Air Movement and Measurement*. A manometer with a pitot tube is used for measuring air velocity in ductwork. The common procedure is to insert the pitot tube in the duct and connect it to a manometer. This will give the technician both the total pressure and static pressure reading on the manometer. This can then be used to determine the velocity. A variety of manometer designs exist, as shown in **Figure 7-54**.

To measure duct pressures, a water manometer is usually used. The scale is usually movable, making it easier to adjust for the neutral point. **Figure 7-55** shows a manometer connected to an air duct to determine its pressure.

Caution

Manometer Blowout

Be aware of what pressure values you expect to measure before connecting a manometer. Always follow manufacturer setup directions to avoid blowing out the manometer's liquid. Sudden pressure changes may force the liquid out of the manometer, rendering the instrument useless.

Manometers can also be used to measure the pressure difference between two different places in an air duct. An example of this is a manometer used to measure the pressure drop across an air filter in an air distribution system.

Copyright Goodheart-Willcox Co., Inc.

Pacific Transducer Corp.

Figure 7-52. This minimum-maximum digital thermometer has both an internal and an external sensor.

Manometer scales are based on the following data:

Unit equivalents:

14.7 psi = 29.92 in. Hg
14.7 psi = 34′ water
1 in. Hg = 0.491 psi
1 psi = 2.035 in. Hg
1 psi = 2.31′ water
1 psi = 27.67″ water (in. H_2O)
1′ water (ft. H_2O) = 0.432 psi
1″ water (in. H_2O) = 0.036 psi

Amprobe

Figure 7-53. This data logger is capable of recording temperature and humidity.

Digital Manometer

U-Tube Manometer

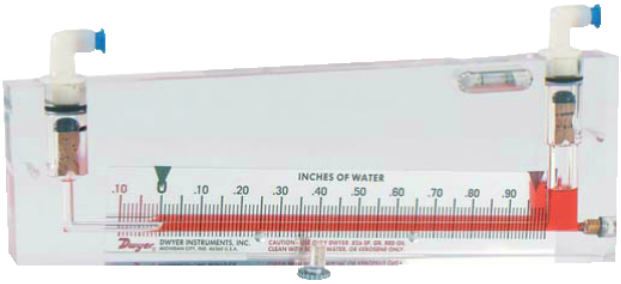

Inclined Manometer

Dwyer Instruments, Inc.

Figure 7-54. These are examples of common manometers.

Copyright Goodheart-Willcox Co., Inc.

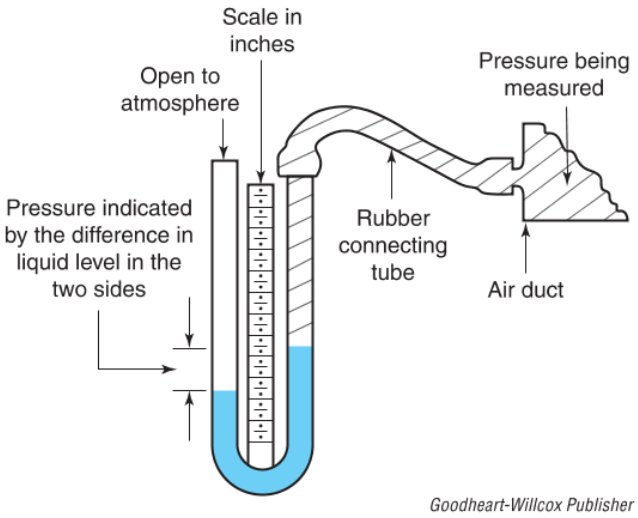

Figure 7-55. Note how a manometer is connected to an air duct to measure duct pressure.

7.3.3 Linear Measuring Tools

Measuring tools used by technicians include rulers, tapes, and micrometers. Measuring tools are used in cutting tubing and determining installation locations. A 9″ or 12″ stainless steel ruler is frequently needed when overhauling or installing refrigeration systems. The ruler should be graduated in increments of 1/32″. Numerals and graduations should be clearly visible. Installation workers may find a 25′ flexible steel tape useful when laying out a job, **Figure 7-56**.

7.3.4 Multimeters

A multimeter is a single instrument that comprises a collection of meters measuring different electrical variables. The most common measurements made with multimeters are voltage (ac or dc volts), resistance (in ohms, Ω), and current (ac or dc amps). Before the development of multimeters, it would have taken a voltmeter, an ohmmeter, and an ammeter to measure these different variables, **Figure 7-57**.

Multimeters can be either analog or digital. While analog meters generally read only the variables previously mentioned, newer digital multimeters can be used to measure a variety of other variables. Special attachments can further broaden the measuring capabilities of multimeters.

Since multimeters are used primarily in the electrical and electronic tasks of HVACR work, the various functions available on multimeters and how to use them will be covered in Chapter 17, *Servicing Electric Motors and Controls*.

7.4 Standard Supplies

In addition to tools and instruments, HVACR technicians use a steady stream of supplies in the systems they service. However, unlike tools and instruments, supplies are used and must be replaced on a regular basis. Supplies that technicians will need include screws, bolts, assorted fasteners, gaskets, abrasives, brushes, and cleaning solvents.

7.4.1 Fasteners

Various techniques have been developed to fasten pieces together. In metal work, solder, braze, welds, crimps, rivets, bolts, machine screws, pins, spring fasteners, and force fits have been used with success.

Milwaukee Electric Tool Corp.

Figure 7-56. Always take accurate measurements before cutting and installing materials.

Copyright Goodheart-Willcox Co., Inc.

Amprobe

Figure 7-57. The settings around the selector knob highlight the versatility of modern multimeters.

The type of fastening device used depends on the kind and condition of the metal and on how frequently the pieces must be dismantled. If the parts are to be put together permanently, riveting, welding, soldering, and brazing are popular fastening methods.

If the parts must be dismantled for frequent repair or service, fastening devices must be used that can be easily removed without damaging the parts. Nuts and bolts, cap screws, machine screws, and setscrews are used in these situations. **Figure 7-58** shows an assortment of fastening devices. In the SI system, fastener sizes are specified in millimeters. In the US Customary system, fastener sizes are expressed in inches and fractions of an inch. In both cases, fastener sizes are based on the diameter of the threaded portion of the fastener.

Machine Screws

Many small parts are fastened using specially threaded devices called ***machine screws***, which are like a hybrid between a screw and a bolt, as they can be simply screwed into place or held with a tightened nut. Machine screws are made of steel, stainless steel, brass, alloys, or other materials. These screws are available in a variety of head shapes. Various methods are used to turn machine screws. Some less commonly used screw heads are shown in **Figure 7-59**.

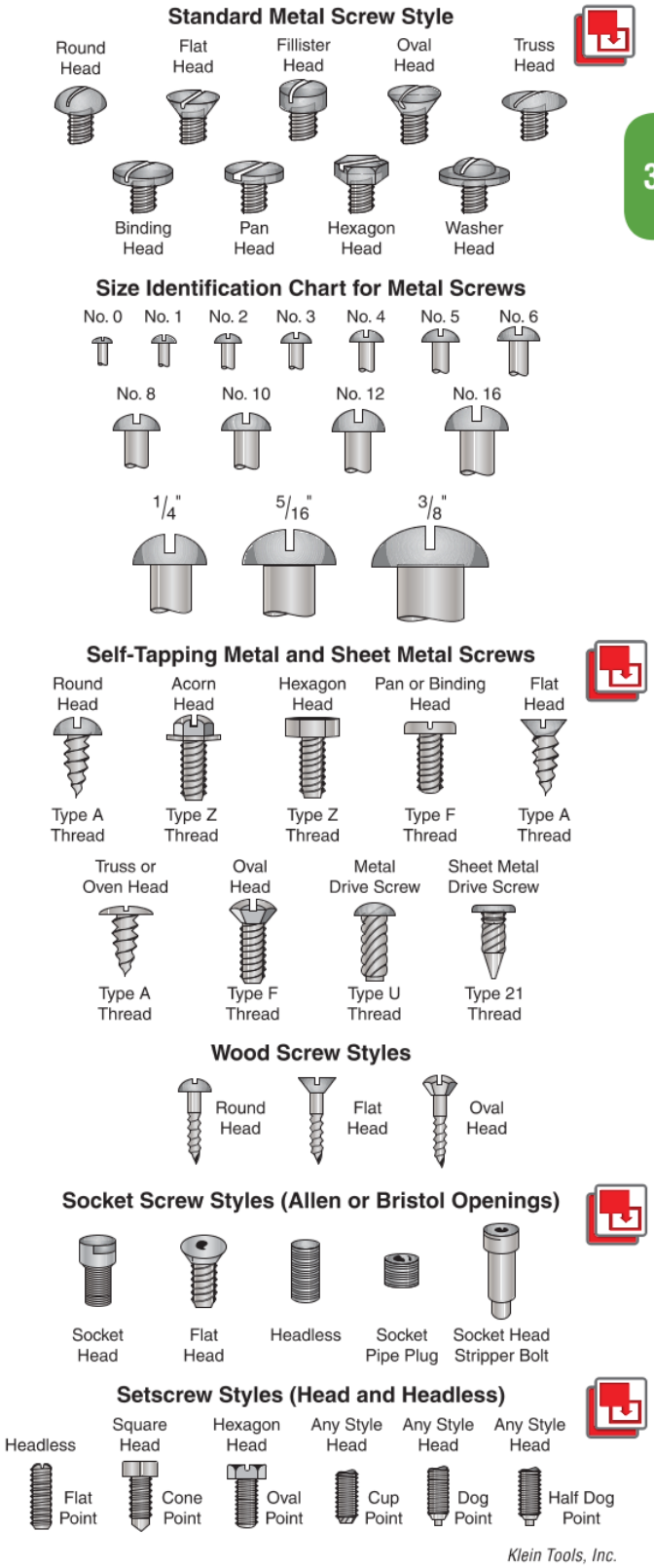

Klein Tools, Inc.

Figure 7-58. Fasteners must be carefully used and driven with proper tools.

Copyright Goodheart-Willcox Co., Inc.

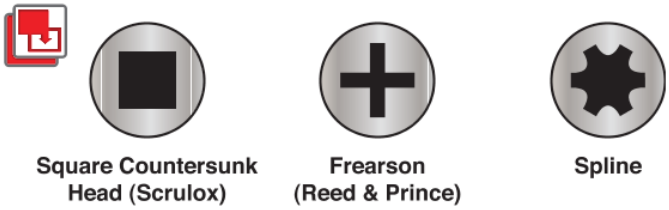

Goodheart-Willcox Publisher

Figure 7-59. These screw heads are less commonly used.

Machine screws come in various diameters. Eight are in the numbered sizes, while three are in the fractional inch sizes. The larger the number is, the larger the diameter. Each size may have either fine or coarse threads. A table of machine screw sizes and threads is given in **Figure 7-60**.

Bolts and Cap Screws

A ***bolt*** is a narrow, threaded shaft or bar with a head on one end that screws together with a nut to act as a fastener. In general, bolts and cap screws are used in sizes 1/4″ and larger. According to ISO specifications, the length of threads on a bolt is usually two times the bolt diameter plus 1/2″. The threading on a cap screw is usually longer than the threading on a bolt. Threads sometimes extend up to the head of the cap screw. A ***cap screw*** is threaded into a part of a mechanism and does not require a nut.

Common Machine Screw Sizes

Screw Number or Fractional Size	Diameter (in)	Threads Per Inch	
		Coarse	Fine
2	0.086	56	64
3	0.099	48	56
4	0.112	40	48
5	0.125	40	44
6	0.138	32	40
8	0.164	32	36
10	0.190	24	32
12	0.216	24	28
1/4	0.250	20	28
5/16	0.3125	18	24
3/8	0.375	16	24

Goodheart-Willcox Publisher

Figure 7-60. With machine screw sizes, a single diameter screw size can have two different threads per inch, depending on whether it is coarse or fine. This is a list of common sizes.

Metric screws can have four thread types: coarse, average, fine, and extra fine. Diameters of metric bolts, nuts, and screws, as well as the thread pitches, are in millimeters. Bolt size is determined by outside thread diameter.

Loosening a Tight Bolt or Nut

There are several safe ways to loosen a tight bolt or nut. Any of the following methods can be used to loosen corroded threads:

- Soak the threads with penetrating oil (an oil with a very low viscosity, specifically formulated to seep through rust to lubricate corroded threads). Apply the oil at the top of fastener, and allow it plenty of time to seep down through the corroded threads before attempting to loosen the frozen bolt or nut. You may need to allow the oil to soak in overnight on badly corroded threads.
- Heat the nut or bolt with a propane or acetylene torch. Keep in mind that the part being heated will expand. So, if you want to remove a nut, you would heat the nut, but not the bolt. If you want to remove a frozen cap screw from a part, you would heat all around the edges of the threaded bore, which should increase the bore's diameter slightly. Make sure the area being heated is free of lubricants. Never heat a vessel filled with a gas or liquid. Observe all appropriate safety guidelines when operating the torch.
- Lightly tap the nut or bolt with a hammer. Be careful not to apply too much force, which could actually damage the part or fastener. If you are working on copper, aluminum, or another soft material, you should use a plastic mallet rather than a steel hammer. Keep in mind that it is the steady vibration from the tapping, not the force of the blows, that loosens corroded threads.

7.4.2 Gaskets

Most mating surfaces are somewhat rough. To make a leak-proof joint, ***gaskets*** are often used between the surfaces. Gaskets are placed between the mating surfaces of parts being connected. As the joints are tightened, the gaskets are compressed. Gaskets, being soft, conform to the irregularities in the mating surfaces and seal the joints. They keep refrigerant from leaking out, prevent oil leakage, and keep air out of the system. Gaskets are commonly used between the valve plate and the compressor body,

Copyright Goodheart-Willcox Co., Inc.

between the service valve and the compressor body, and between the valve plate and the compressor head. Gaskets are also used on the crankcase and at the crankshaft seal on open or external drive units, **Figure 7-61**.

Gaskets can be made of neoprene, silicone, sponge rubber, felt, plastics, cork, rubber, or various metals. Metals are the most common gasket materials. Lead is popular, being soft and noncorrosive. Aluminum has also been used. Composition gaskets made of plastic-impregnated paper are also popular.

Gaskets must not restrict the openings. They must not lose their compressibility. Replacement gaskets must not be thicker than the original gaskets. The surfaces of parts that contact the gasket must be free of burrs, bruises, and foreign matter.

7.4.3 Abrasives

Metal surfaces can be cleaned, smoothed, or formed to accurate size with ***abrasives***. Abrasives are sand-like grinding particles, often attached to paper or cloth by glue or other adhesives. Sandpaper was the most widely used abrasive product for many years. Today, emery, aluminum oxide, and silicon carbide are also commonly used.

Each abrasive has several grades or variations in coarseness:

- Emery cloth—0000 (finest), 000 (extra fine), 00 (very fine), 0 (fine), 1/2 (medium fine), and 1 (medium).
- Silicon carbide—500 (finest), 360 (very fine), 320 (fine), 220 (medium fine), and 180 (medium).
- Aluminum oxides—320 (extra fine), 240 (fine), 150 (medium fine), and 100 (medium).

These abrasives come in 9″ × 11″ sheets or in rolls of different widths. Size 1″ is the width typically used for HVACR work. Sheet abrasives, whether paper or cloth, should be backed by a block of wood, metal, felt, or rubber. Special sanding blocks may also be used. Always use clean abrasive paper.

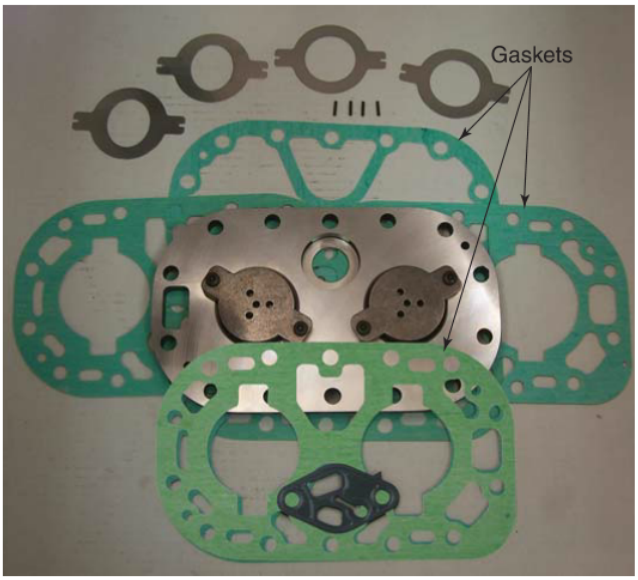

CMP Corporation

Figure 7-61. Gaskets and the parts they seal against within a large reciprocating compressor.

7.4.4 Brushes

A clean steel wire brush is an excellent tool to prepare copper and steel surfaces for welding or brazing. The brushes should have fine steel wire bristles that are thickly set. The handle should be comfortable. Special cylindrical brushes are good for cleaning outside and inside surfaces of tubing and fittings. See **Figure 7-62**. These brushes range in diameter from 1/4″ to 2 1/2″ (6 mm to 63.5 mm) to fit the diameter of the fitting.

Solder flux brushes are used for applying paste. Paintbrushes may be used for removing dust or dirt from an object or for applying cleaning agents.

7.4.5 Cleaning Solvents

Many refrigeration components must be thoroughly cleaned before and after repair. Any cleaning method must remove oil, grease, and sludge. In refrigeration and air conditioning, the cleaning method must also remove moisture, or at least it should not add moisture. Cleaning must not damage parts nor harm people. There are several cleaning methods available, including the following ***cleaning solvents***:

- Steam. If parts are exposed to hot water or steam, any grease on them will usually become fluid and

Worthington Cylinders

Figure 7-62. This wire brush is used for cleaning the inside and outside surfaces of tubing before soldering or brazing.

Copyright Goodheart-Willcox Co., Inc.

flow off the surface. Steam and hot water may burn the operator if they are carelessly applied. Steam cleaning is primarily used in industrial applications where equipment may become covered in grease.

- Caustic cleaning solution. An alkaline cleaner dissolved in hot water will remove grease and oil. This solution must be used carefully, otherwise burns or eye injury can result.
- Oleum (mineral spirits) or kerosene. These petroleum products are popular for cleaning. These products clean well and leave a smudge-free surface. However, they present a fire hazard and should always be used in small amounts. They should be contained in self-closing tanks. The area where they are being used should be exhaust-ventilated (have a hood and an explosion-proof exhaust fan). Mineral spirits are commonly used when cleaning small parts to remove paint residue or grease build-up.
- Alcohol. Alcohol is also a good cleaning fluid. However, it is both flammable and toxic. Special precautions must be taken: provide excellent ventilation, do not use near open flames, and use in small amounts.
- Degreasing vapor. Degreasing vapor involves using a cleaning fluid contained in a tank. The fluid is warmed, filling the upper part of the tank with vapors of the cleaner. Any parts suspended in this cleaning vapor are quickly and thoroughly cleaned. Such a tank must be specially vented. Degreasing tanks are primarily used by compressor remanufacturers where the components of a compressor, such as pistons and valves, are soaked in the tank to remove all built-up residue.
- Other cleaning fluids. A wide variety of cleaners are available. Check the manufacturer's recommended use to be sure the cleaner is appropriate for your application. Always read and carefully follow the manufacturer's instructions.

Safety Note

Excluded Cleaning Solutions

Carbon tetrachloride should never be used to clean refrigeration or air conditioning components. This chemical is toxic and can be absorbed through the respiratory system or the skin.

Never use gasoline for cleaning. It has a low flash point. Gasoline fumes are heavy and may travel far to ignition sources, causing an explosion or flash fire. Do not use propane to clean parts. Propane is very combustible.

7.5 Employer-Provided Tools and Equipment

A set of quality, well-maintained tools is required for servicing refrigeration units. Also, complete records of each job should be kept in an orderly manner. Most companies provide a panel truck or pickup truck equipped with major items such as:

- Vacuum pump.
- Recovery/recycling unit.
- Tubing and piping.
- Combination soldering, brazing, and welding outfit.
- Supply of replacement parts and materials.
  - A. Controls.
  - B. Fittings.
  - C. Lubricants.
  - D. Refrigerant.
- Leak detectors, especially electronic testers.
- Electrical testing instruments.

A service technician is usually expected to furnish his or her own hand tool kit. It is important to keep tools clean. This will result in better and faster work and extended tool life. Keep tools together on the job, either in a tool kit or in the truck. They should be organized and arranged neatly. Use good lighting on the job for ease of work and safety. Keep an extension cord and a movable light that can be safely mounted in your work area, **Figure 7-63**.

Milwaukee Electric Tool Corp.

Figure 7-63. Sufficient light is necessary in poorly lit locations and when power must be turned off for some electrical work.

Copyright Goodheart-Willcox Co., Inc.

Below is a list of some common tools to take on service calls:

- Refrigerant hoses with quick-connect fittings.
- Soldering/brazing torch (air-fuel or oxyacetylene).
- Hand vacuum cleaner.
- Gauge manifold (for R-410A, R-134a, etc.).
- Process tube adapters for connecting 3/16″, 1/4″, 5/16″, and 3/8″ copper tubing to charging hose.
- Tubing bender for 1/4″, 5/16″, and 3/8″ tubing.
- Flaring tool (3/16″ to 1/2″ capacity).
- Tubing cutter.
- Pinch-off tool.
- Swaging tool set (1/4″ to 5/8″).

Pro Tip

Clean Jobsite

The jobsite may require cleaning before starting work, while working, and after work is completed. A clean jobsite is a safe jobsite. Cleanliness also shows professionalism, which customers are happy to see, **Figure 7-64**.

Milwaukee Electric Tool Corp.

Figure 7-64. A vacuum is useful for cleaning up after an installation job.

Copyright Goodheart-Willcox Co., Inc.

Chapter Review

Summary

- It is best to use the type of wrench that can provide the most surface area contact between the wrench and the object that needs to be turned, such as a nut or bolt. Specialty wrenches are available for specific purposes such as gripping pipes, loosening flare nuts, or turning refrigeration service valves.
- Hammers are often used when installing supports for pipes and fastening sheet metal to wood. Mallets are used to drive parts into place during service work.
- Combination (slip-joint) pliers are versatile and have numerous uses. HVACR technicians often use lineman's pliers and diagonal pliers in electrical work as well.
- The most commonly used screwdrivers are slotted (straight blade) and Phillips. Due to space constraints in refrigeration work, technicians should have stubby (short) and offset screwdrivers available when necessary.
- Vises are used for holding parts when cutting, drilling, filing, or assembling.
- A cold chisel is a narrow metal tool with a beveled edge for cutting through various materials. A punch is a cylindrical tool used to mark metal, punch holes in material, or drive out pins. Files are hand tools used for cleaning and shaping metal parts.
- Hacksaws are used for cutting tubing and other metal parts. Blades vary by the number of teeth per inch. In general, the softer the material being cut, the less teeth required per inch.
- Levels are used in installation work to ensure that parts are level, plumb, and properly oriented.
- Power tools, such as electric drills, impact drivers, hammer drills, and reciprocating saws, are used for installation, service, and retrofit work in HVACR.
- Thermometers are instruments for measuring temperature. Different types of thermometers are glass-stem, dial, and digital.
- A manometer is a type of pressure gauge that measures values around atmospheric pressure. Often a manometer is used in determining air velocity in ductwork.
- Technicians often use stainless steel rulers and flexible steel tapes in planning an installation.
- For electrical measurements, technicians use multimeters, which package the functions of voltmeters, ohmmeters, and ammeters into a single instrument.
- Fasteners, such as machine screws, bolts, and cap screws, are found throughout a refrigeration system.
- Gaskets are soft materials placed between two rough surfaces that compress to form a seal between the surfaces.
- Abrasive materials are used to clean, smooth, or form metal surfaces. Brushes are used to clean or prepare metals for connecting, such as in brazing or welding.
- Cleaning solvents are used on many refrigeration system components before and after repair. Oil, grease, sludge, and moisture should be removed before finishing service work and returning a system to operation.
- Employers often provide certain tools, supplies, and equipment. Technicians are usually expected to supply their own hand tools. Tools and instruments must be kept clean and properly calibrated.

Review Questions

Answer the following questions using the information in this chapter.

1. What size wrench is used to loosen a 1/8″ bolt?
   A. 1/4″
   B. 5/16″
   C. 3/8″
   D. 7/16″
2. Which of the following could *not* be used to describe a box wrench?
   A. Double-ended
   B. Offset
   C. Double offset
   D. Open ended
3. Which type of wrench can be used to access a bolt head or nut from the side?
   A. Socket wrench
   B. Box end wrench
   C. Open end wrench
   D. Nut driver

Copyright Goodheart-Willcox Co., Inc.

4. When should you push and pull on a wrench?
   A. Push to loosen, pull to tighten
   B. Pull to loosen, push to tighten
   C. Always push
   D. Always pull
5. Which tool is used to remove a screw with a hexagonal indent in the head?
   A. Screwdriver
   B. Flare nut wrench
   C. Hex key wrench
   D. Six-point socket
6. Another name for a hex key wrench is a(n) _____.
   A. allen wrench
   B. pipe wrench
   C. flare nut wrench
   D. socket wrench
7. A(n) _____ wrench is used to open and close service valves.
   A. box end
   B. pipe
   C. refrigeration service valve
   D. adjustable
8. A _____ is used to drive parts together without damaging them.
   A. hammer
   B. mallet
   C. chisel
   D. file
9. Mainly used for cutting wires, _____ have angled jaws for making nearly flush cuts.
   A. diagonal pliers
   B. files
   C. chisels
   D. punches
10. Drill bit sizes are specified by the _____ of the hole they create.
    A. diameter
    B. radius
    C. circumference
    D. length
11. Which of the following is *not* a common type of punch?
    A. Drift punch
    B. Pin punch
    C. Prick punch
    D. Mushroom punch
12. Which file type has only single-cut teeth?
    A. Mill file
    B. X file
    C. Hand file
    D. Flat file
13. A hacksaw with _____ teeth per inch is used to cut thin metal, tubing, and hard metal.
    A. 14
    B. 18
    C. 32
    D. 24
14. When cutting a hole into masonry to install an anchor for an outdoor condensing unit, the best tool to use is a _____.
    A. cold chisel
    B. hammer drill
    C. multimeter
    D. reciprocating saw
15. To quickly remove or tighten fasteners for unit assembly, the best tool to use is a(n) _____.
    A. hacksaw
    B. impact driver
    C. level
    D. slip-joint pliers
16. When cutting large holes through walls, floors, or ceilings for the installation of air registers on ductwork, the best tool to use is a _____.
    A. center punch
    B. double-cut file
    C. reciprocating saw
    D. twist drill on an electric drill
17. The most common way to check a thermometer for accuracy is to dip it in _____ to get a reading close to 32°F.
    A. R-134
    B. saltwater
    C. a mixture of ice and water
    D. room temperature water
18. Use a _____ when installing so the end result will be level and plumb.
    A. chisel
    B. level
    C. multimeter
    D. punch
19. A thermometer may be used to measure the temperature of _____.
    A. an evaporator
    B. return air and supply air
    C. the liquid line and suction line
    D. All of the above.

Copyright Goodheart-Willcox Co., Inc.

20. A multimeter is often used to measure the _____ in a refrigeration system.
    A. current
    B. volume
    C. pressure
    D. vapor saturation
21. The type of threaded fastener designed to hold together a mechanism without using a nut is a(n) _____.
    A. bolt
    B. tap
    C. abrasive
    D. cap screw
22. Common metric screw thread types include all of the following *except* _____.
    A. coarse
    B. fine
    C. extra fine
    D. offset
23. A tight nut or bolt may be loosened safely by _____.
    A. soaking the threads with penetrating oil
    B. gently heating it
    C. tapping it lightly with a hammer
    D. All of the above.
24. Which of the following is frequently used to clean a metal surface?
    A. Emery cloth
    B. Manometer
    C. Gasket
    D. Gasoline
25. Which one of the following should *not* be used as a cleaning solvent?
    A. Caustic cleaning solution
    B. Alcohol
    C. Carbon tetrachloride
    D. Steam

Copyright Goodheart-Willcox Co., Inc.

Milwaukee Electric Tool Corp.

There is often more than one way of completing a job. Ask senior technicians which tools they use and why. The knowledge of experience and using one tool over another can make a hard job into a quick and easy task.

Copyright Goodheart-Willcox Co., Inc.

CHAPTER 8 Working with Tubing and Piping

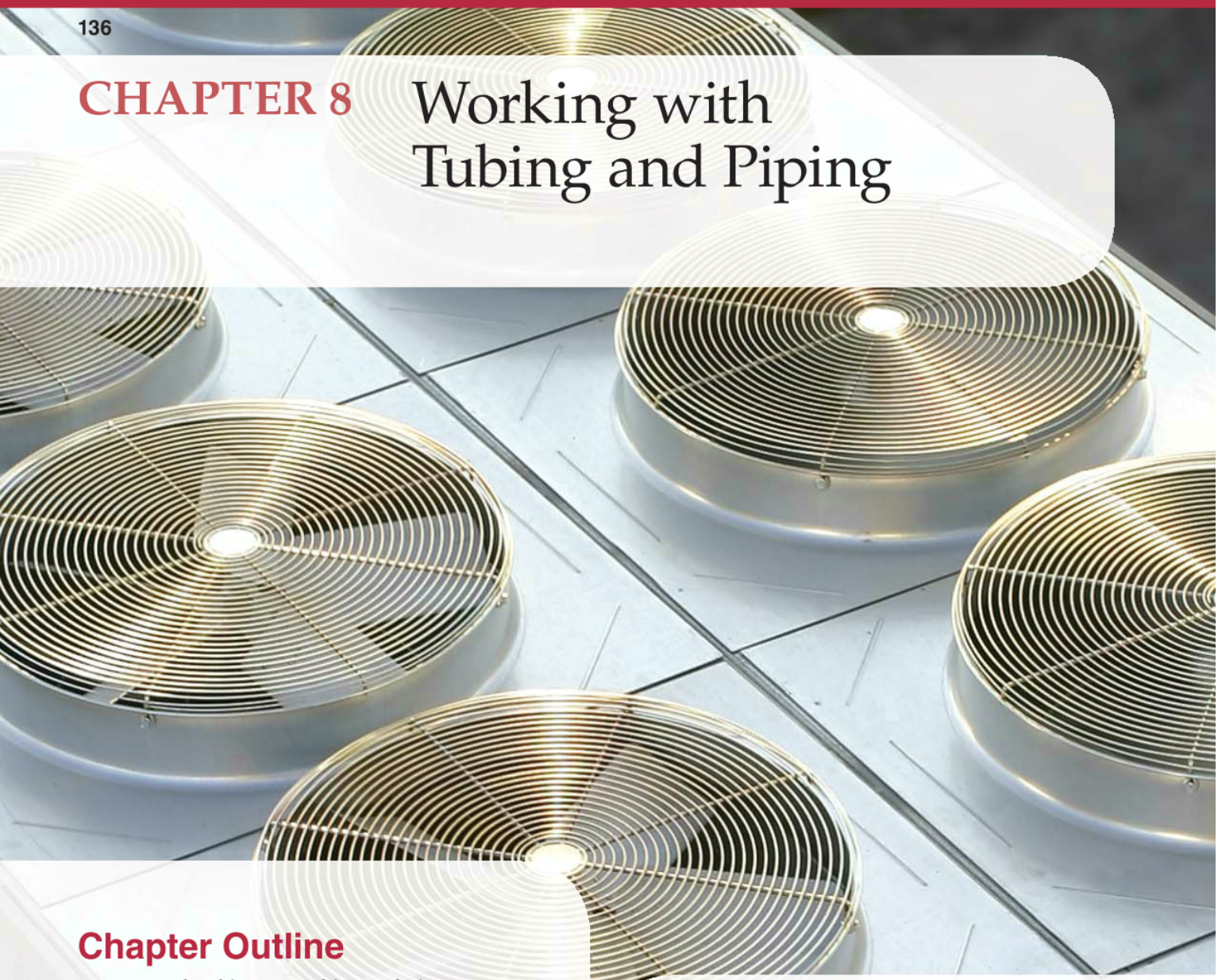

Chapter Outline

8.1 Types of Refrigerant Tubing and Pipe
- 8.1.1 ACR Copper Tubing
- 8.1.2 Stainless Steel Tubing
- 8.1.3 Aluminum Tubing

8.2 Non-Refrigerant Tubing and Pipe
- 8.2.1 Copper Water Tubing
- 8.2.2 Plastic Pipe
- 8.2.3 Steel Pipe

8.3 Cutting Tubing

8.4 Bending Tubing

8.5 Connecting Tubing
- 8.5.1 Flared Connections and Fittings
- 8.5.2 Soldered and Brazed Connections
- 8.5.3 Swaged Connections
- 8.5.4 Specialized Tube Couplings

8.6 Connecting Pipe
- 8.6.1 Joining Steel Pipe
- 8.6.2 Cutting and Joining Plastic Pipe

Learning Objectives

Information in this chapter will enable you to:

- Distinguish among the various types of tubing and piping used in refrigeration work.
- Explain the uses of the various types of tubing and piping in refrigeration work.
- Perform tube cutting and bending procedures using proper methods.
- Complete various tubing and piping connecting procedures using approved methods.
- Use safe and accepted soldering and brazing techniques.
- Follow approved safety procedures.

Technical Terms

ABS (acrylonitrile-butadiene-styrene)
air conditioning and refrigeration (ACR) tubing
annealing
bending spring
brazing
capillary action
carburizing flame
CPVC (chlorinated polyvinyl chloride)
double flare
flare
flashback arrestor
flux
neutral flame
oxidizing flame
oxyacetylene
pipe schedule
purging
PVC (polyvinyl chloride)
single flare
soldering
solvent welding
street fitting
swaging
work hardened

Review of Key Concepts

Reviewing these concepts from earlier chapters will help you understand new concepts presented in this chapter:

- Liquid and suction lines are tubes usually made of copper. They serve as passageways for refrigerant between system components. (Chapter 6)
- Water-cooled condensers use non-refrigerant tubing to carry water that is used to absorb the heat of high-pressure vapor refrigerant. (Chapter 6)
- Flare nut wrenches are used to tighten flare connections, which are used to connect copper tubing to flare fittings. (Chapter 7)
- Refrigeration components must be cleaned with abrasives, such as emery cloth, or cleaning solvents before they are assembled or after repair. (Chapter 7)

Introduction

It is important for the technician to be familiar with the types and uses of tubing and piping in the HVACR field. Accurate modification of tubing and piping provides the basis for an effective service call. When servicing a system, a technician must use proper cutting and joining techniques to ensure both the technician's own safety and the quality of work.

Videos

- Working with Copper Tubing
- Brazing a Copper Tubing Joint

8.1 Types of Refrigerant Tubing

The most commonly used tubing in HVACR is copper tubing. It is important that the technician be familiar with how to join and repair copper tubing. Aluminum and stainless steel tubing are sometimes used for forming evaporator coils.

8.1.1 ACR Copper Tubing

Copper tubing is thin-walled material compared to steel or plastic pipe. It is available in both soft and hard types. Soft copper is hard-drawn copper that has been annealed. Both types are available in different wall thicknesses—K and L. Type K is a heavy wall. Type L is a medium wall. The more commonly used type is Type L.

Most copper tubing used in air conditioning and refrigeration work is known as ***air conditioning and refrigeration (ACR) tubing***. It is manufactured specifically for use in air conditioning and refrigeration systems. ACR tubing is usually charged and sealed with gaseous nitrogen. This keeps the tubing clean and dry until it is used. ACR tubing coil ends should be plugged immediately after a length of tubing is cut from the coil, **Figure 8-1**.

Most tubing and piping is specified by nominal size, not actual size. For example, the nominal size for copper water tubing used in plumbing is equal to the outside diameter (OD) minus 1/8″. ACR tubing size, however, is designated by the actual outside diameter of the tubing, **Figure 8-2**.

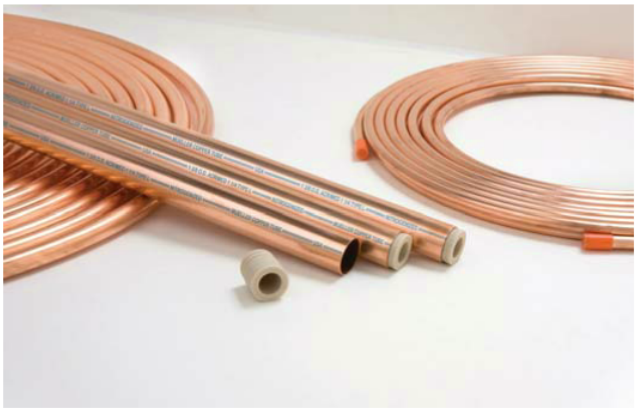

Mueller Industries, Inc.

Figure 8-1. ACR tubing and coil.

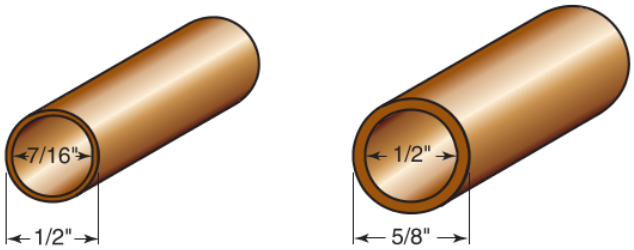

Goodheart-Willcox Publisher

Figure 8-2. Both of these copper tubes have a nominal size of 1/2″. For ACR tubing, the nominal size is equal to the tubing's outside diameter. The nominal size of copper water tubing is equal to the outside diameter minus 1/8″.

Soft ACR Tubing

Soft ACR tubing is used in domestic and some commercial refrigeration and air conditioning work. This tubing has been annealed. ***Annealing*** is a process in which a substance is heated to a specific temperature range and then allowed to cool slowly. Annealing makes tubing soft and flexible for easy bending and flaring.

Annealing Tubing

Wear thick gloves and eye protection whenever using a torch.

1. Hold the tubing in a vise or with insulated pliers.
2. Light the flame of a torch (acetylene, propylene, or any oxyfuel combination) and add oxygen to the fuel gas until the flame is blue.
3. Heat the area of the tubing to be annealed to a dull cherry red.
4. Allow the tubing to air cool slowly.

Soft ACR tubing is sold in 25′, 50′, and 100′ rolls. Sizes most commonly used in HVACR work range from 3/16″ to 3/4″. **Figure 8-3** is a table of common copper tubing diameters and thicknesses. Note that the tubing size and the actual outside diameter are the same in ACR tubing.

Soft ACR tubing can be hardened by oxidation or by repeated bending and hammering. This is referred to as ***work hardened***. Work hardened copper may crack at stress points when flared. Work hardened ACR tubing can be softened by annealing.

When unrolling soft copper coil, hold the coil upright with one hand and hold the open end on a flat surface. Because it is difficult to recoil tubing, unroll only as much tubing as needed. After cutting the tubing, replace the cap or plug to prevent contamination within the tubing.

Hard-Drawn ACR Tubing

Type L or K hard-drawn ACR tubing is used in commercial refrigeration and air conditioning applications. Sizes of hard-drawn ACR tubing

Copyright Goodheart-Willcox Co., Inc.

ACR Copper Tubing Dimensions				
Nominal Size (inches)	Type	Outside Diameter (inches)	Inside Diameter (inches)	Minimum Wall Thickness (inches)
1/8	Soft	0.125	0.065	0.030
3/16	Soft	0.187	0.128	0.030
1/4	Soft	0.250	0.190	0.030
5/16	Soft	0.312	0.248	0.032
3/8	Soft	0.375	0.311	0.032
	Hard	0.375	0.315	0.030
1/2	Soft	0.500	0.436	0.032
	Hard	0.500	0.430	0.035
5/8	Soft	0.625	0.555	0.035
	Hard	0.625	0.545	0.040
3/4	Soft	0.750	0.680	0.035
	Hard	0.750	0.666	0.042
7/8	Soft	0.875	0.785	0.045
	Hard	0.875	0.785	0.045
1 1/8	Soft	1.125	1.025	0.050
	Hard	1.125	1.025	0.050
1 3/8	Soft	1.375	1.265	0.055
	Hard	1.375	1.265	0.055
1 5/8	Soft	1.625	1.505	0.060
	Hard	1.625	1.505	0.060

Goodheart-Willcox Publisher

Figure 8-3. For ACR tubing sizes, note that both soft and hard-drawn types have the same outside diameters. The size specification for ACR tubing is the actual outside diameter of the tubing.

range from 3/8″ to over 6″. Hard-drawn ACR tubing is typically supplied in 10′ and 20′ lengths. It is available in the same diameters and thicknesses as soft ACR tubing. Being hard and stiff, hard-drawn tubing needs few clamps or supports, particularly in larger diameters.

Hard-drawn tubing should not be bent; therefore, flared connections cannot be used. Use straight lengths and fittings of different angles to form the necessary tubing connections. Hard-drawn ACR tubing joints should be brazed, not soldered. Solder should be used only on water lines.

8.1.2 Stainless Steel Tubing

Stainless steel tubing comes in typical tubing sizes for refrigeration. Stainless steel is strong and very resistant to corrosion. It may be easily connected to fittings by flaring or brazing.

Stainless steel tubing Type 304 is commonly used. It is often used in various systems, such as food processing, ice cream manufacturing, milk handling, and transportation of food items. It can also be used for specialized cooling coils, **Figure 8-4**.

3

8.1.3 Aluminum Tubing

For certain applications, aluminum tubing may be used in HVACR. A common use of aluminum tubing is to form evaporators. Methods of bending and connecting aluminum tubing are being researched and developed to incorporate it more easily into system installation. Motivations for doing so include the supply of aluminum and its price compared to copper, **Figure 8-5**.

Thinking Green

Working with Tubing

Tubing that is assembled or repaired using improper brazing or handling techniques is more likely to develop leaks than tubing that is properly handled. Any weak areas in the tubing or joints may develop a leak over time as the system is subjected to vibration and repeated heating and cooling cycles during operation. Closely following proper tubing handling and brazing procedures will minimize weak spots in the refrigerant circuit and reduce the possibility that the tubing will develop a refrigerant leak.

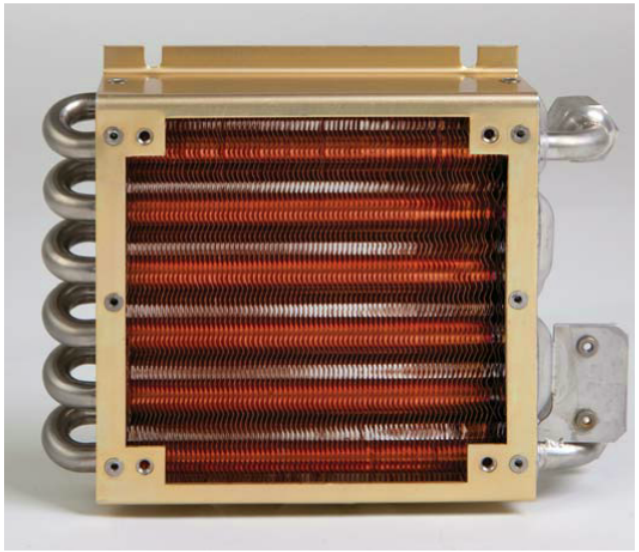

Lordan A.C.S. Ltd

Figure 8-4. Stainless steel tubing bent for use as a special application cooling coil.

Copyright Goodheart-Willcox Co., Inc.

A

B

Lordan A.C.S. Ltd

Figure 8-5. A—Aluminum tubing. B—A large aluminum evaporator with copper leads.

8.2 Non-Refrigerant Tubing and Pipe

Non-refrigerant tubing and pipe are used in an HVACR system as water lines, drain lines for condensation, vents for combustion gases, fresh air inlets, and circulating pathways for brines or water that has been heated or chilled. Depending on usage, these tubes or pipes may be made of copper, plastic, or various metals. Iron and steel pipe are frequently used for hot water pipes and gas lines. Neither copper water tubing nor plastic pipe is suitable to circulate refrigerants in a mechanical refrigeration system.

8.2.1 Copper Water Tubing

Copper water tubing is used on water lines, drains, and in other non-refrigerant applications. It is available in both soft and hard-drawn grades. Nominal size is equal to 1/8″ less than the outside diameter. **Figure 8-6** shows a table of commonly used sizes of copper water tubing.

Caution

Use the Right Copper Tubing

Copper water tubing is *never* used to circulate refrigerants in a mechanical refrigeration system. When purchasing from a supply house, be sure to specify the application of your copper tubing to avoid any mix-up. ACR tubing is for refrigerant applications. Copper water tubing is for water applications.

Wall thickness (type) is indicated by the use of a letter after the nominal size: K (heavy wall) and L (medium wall). Type K is used where corrosion conditions are severe. Type L is used where conditions may be considered normal.

Copper Water Tubing Dimensions

Nominal Size (inches)	Type	Outside Diameter (inches)	Inside Diameter (inches)	Minimum Wall Thickness (inches)
1/4	K	0.375	0.305	0.035
	L	0.375	0.315	0.030
3/8	K	0.500	0.402	0.049
	L	0.500	0.430	0.035
1/2	K	0.625	0.527	0.049
	L	0.625	0.545	0.040
5/8	K	0.750	0.652	0.049
	L	0.750	0.666	0.042
3/4	K	0.875	0.745	0.065
	L	0.875	0.785	0.045
1	K	1.125	0.995	0.065
	L	1.125	1.025	0.050
1 1/4	K	1.375	1.245	0.065
	L	1.375	1.265	0.055
1 1/2	K	1.625	1.481	0.072
	L	1.625	1.505	0.060

Goodheart-Willcox Publisher

Figure 8-6. For copper water tubing, both type K (heavy wall) and type L (medium wall) are available in hard and soft temper. Note that the outside diameters listed are 1/8″ (0.125″) larger than the nominal tubing size.

Copyright Goodheart-Willcox Co., Inc.

Mueller Industries, Inc.

Figure 8-7. ABS pipe.

Pro Tip

Fitting Size

When purchasing fittings for copper water tubing, it is important that the fitting is the same size as the tubing. To avoid problems, all non-refrigeration tubing, valves, and fittings should be ordered by nominal size.

8.2.2 Plastic Pipe

Plastic pipe is widely used in plumbing and other applications. Plastic pipe cannot be used to circulate refrigerant. However, it has become a replacement for steel pipe in many applications as it is less expensive and easier to join and install than metal piping.

Plastic pipe does not corrode, scale, rust, or pit on inside or outside surfaces. It is resistant to bacteria, algae, and fungi. Three types of plastic pipe are used in refrigeration-related work: ABS, PVC, and CPVC.

ABS Pipe

ABS (acrylonitrile-butadiene-styrene) is a black pipe used for drainage, waste, and vent piping, as it is resistant to deposit formation. See **Figure 8-7**. ABS is appropriate for non-pressure applications where the operating temperature will not exceed 180°F (82°C). It can be exposed to a wide temperature span, from –40°F to 180°F (–40°C to 82°C). A variety of lengths of ABS pipe are available. Either solvent cementing or threading can be used to join ABS pipe. ABS can also be connected to steel or copper using transition fittings.

PVC Pipe

PVC (polyvinyl chloride) plastic pipe is white. It is commonly used for cold water supply, drain lines, fresh air inlet, and some furnace exhaust applications. PVC is resistant to corrosion and chemical attack. A safe temperature range for PVC pipe is from –100°F to 175°F (–73°C to 79°C). Solvent cementing, threading, or flanging can be used to join PVC. Grades for PVC include Schedule 40 and Schedule 80. Schedule 80 has a thicker wall than Schedule 40, making it more appropriate for higher pressure applications. Sizes for PVC pipe are shown in **Figure 8-8**.

CPVC Pipe

CPVC (chlorinated polyvinyl chloride) plastic pipe is usually a light beige or tan color. It may be used for hot and cold water lines and drains as local building codes permit. It can also be used for some furnace venting applications. CPVC has physical properties similar to or better than PVC. Its maximum service temperature is 210°F (99°C). It is an excellent material for hot, corrosive liquids. CPVC may be joined by solvent cementing, threading, or flanging. Similar to PVC, grades for CPVC include Schedule 40 and Schedule 80. CPVC is rated to handle water pressure of 100 psi (700 kPa) at a temperature of 180°F (82°C). Both PVC and CPVC come in 10′ and 20′ lengths.

PVC Pipe Dimensions

Nominal Size (inches)	Schedule	Outside Diameter (inches)	Inside Diameter (inches)	Minimum Wall Thickness (inches)
1/4	40	0.540	0.344	0.088
	80	0.540	0.282	0.119
3/8	40	0.675	0.473	0.091
	80	0.675	0.403	0.126
1/2	40	0.840	0.622	0.109
	80	0.840	0.526	0.147
3/4	40	1.050	0.804	0.113
	80	1.050	0.722	0.154
1	40	1.315	1.029	0.133
	80	1.315	0.936	0.179
1 1/4	40	1.660	1.360	0.140
	80	1.660	1.255	0.191
1 1/2	40	1.900	1.590	0.145
	80	1.900	1.476	0.200
2	40	2.375	2.047	0.154
	80	2.375	1.913	0.218

Goodheart-Willcox Publisher

Figure 8-8. In this table of PVC pipe specifications, note the difference in wall thickness between Schedule 40 and Schedule 80.

Copyright Goodheart-Willcox Co., Inc.

Mueller Industries, Inc.

Figure 8-9. Threaded galvanized and black steel pipe.

8.2.3 Steel Pipe

In most HVACR systems, steel pipe is not used to circulate refrigerant. The major exception is in ammonia refrigeration systems. Ammonia may chemically react with copper tubing. Steel pipe is primarily used for gas lines or water pipes.

Two common types of steel pipe are galvanized pipe and black pipe , **Figure 8-9**. Galvanized pipe is treated with a zinc anticorrosion material. Galvanized pipe is a gray-colored steel pipe. It is used primarily in water systems to prevent rust. Black pipe is usually less expensive than galvanized pipe and is used for gas lines and applications that do not carry water.

Steel pipe is also called "rigid pipe." Unlike copper tubing, steel pipe cannot be bent, flared, or easily cut. Steel pipe may be joined using welding, but more often it is joined by cutting threads onto the pipe and using threaded fittings. Threaded unions, elbows, and tees join most steel pipe, **Figure 8-10**.

Mueller Industries, Inc.

Figure 8-10. Commonly used threaded fittings for galvanized and black steel pipe.

Copyright Goodheart-Willcox Co., Inc.

Steel pipe is measured by inside diameter (ID). The wall thickness of steel pipe varies, so pipe sizes are specified by nominal diameter.

8.3 Cutting Tubing

Two tools are essential in cutting tubing: a hacksaw and a tubing cutter. A hacksaw is preferred for cutting larger hard-drawn copper tubing. A tubing cutter is usually used on smaller soft copper tubing and some aluminum tubing. **Figure 8-11** shows both a wheel-type and a mini wheel-type tubing cutter. Note the attached reamer on the full-size cutter, which is used to remove burrs from inside the tubing after cutting. Grooves in the roller wheels allow the cutter to be used to remove a flare from tubing with little waste.

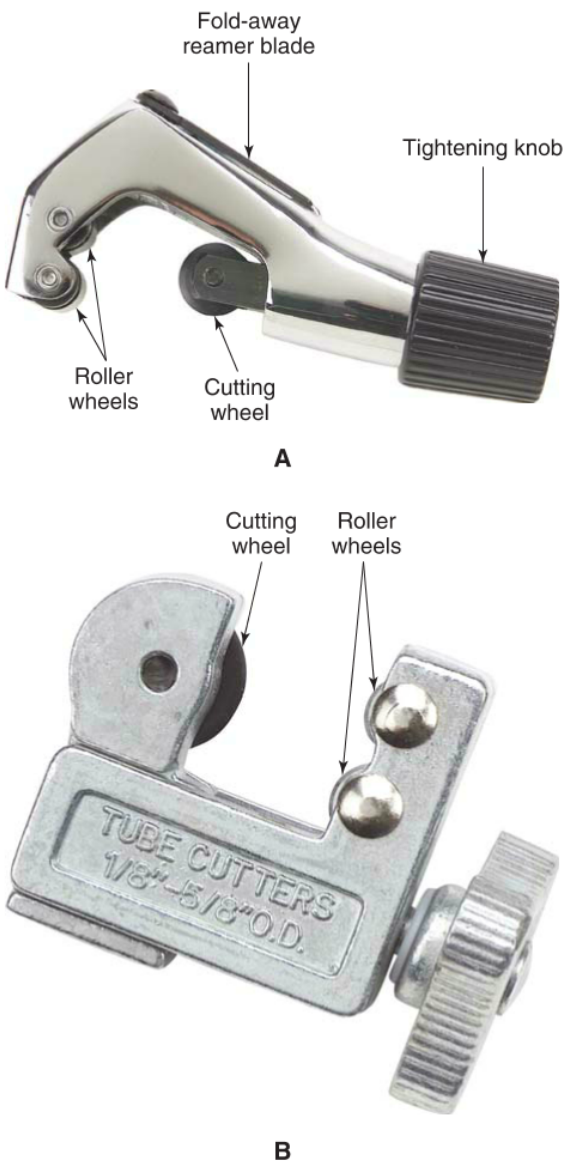

Bacharach, Inc.

Figure 8-11. A—A wheel-type tubing cutter for cutting copper tubing. B—A mini-tubing cutter for use in cramped areas.

Caution

Square Cutting

Tubing should always be cut straight and square (90°) to eliminate an off-center flare or other tubing connection troubles.

Cutting Tubing with a Tubing Cutter

Before beginning the cutting process, make sure the cutting wheel is tightly secured in the tubing cutter. It should not be dull. Turn the tightening knob counterclockwise until there is plenty of room to slide the tubing between the cutting wheel and rollers without scoring it. Refer to **Figure 8-12** as you read through the following procedure:

1. Use a measuring tape and pencil to measure and mark the exact amount of tubing you need.
2. Firmly place and hold the tubing against the rollers of the tubing cutter.
3. Carefully align the cutting wheel with the measured mark on the tubing.
4. Screw the tightening knob clockwise until the cutting wheel is pressing against the mark on the tube.
5. Rotate the tubing cutter around the tube in complete revolutions, gradually turning the tightening knob clockwise to increase cutting pressure with each revolution. If the pressure is too low, the cutter will rotate with little resistance. If the cutting pressure is too great, there will be a lot of resistance on the cutter, making it difficult to rotate smoothly. Be careful not to apply too much pressure, as this could flatten the tubing.

Cutting Tubing with a Hacksaw

When cutting tubing with a hacksaw, use a blade with a wave set pattern and 32 teeth per inch to achieve the best results. A scrap piece of wood may be used to raise the tubing to an effective cutting height.

1. Use a miter box to hold the tubing and ensure a square cut.

Copyright Goodheart-Willcox Co., Inc.

Aligning the Cutting Wheel

Tightening the Tubing Cutter

Uniweld Products, Inc.

Figure 8-12. As you tighten the knob, be sure the wheel is lined up with the mark on the tubing. Remember to tighten the cutting wheel as you rotate the cutter around the tube.

2. Move the saw slowly in a back and forth motion, applying very little pressure. Do not push hard or the tubing will bend to an oval shape.
3. Clean the edge of the cut using a small file or pipe reamer to remove any burrs on the inside or outside. Do not allow the chips to fall into the section of tubing that is to be used.
4. Go over the cut end with an emery cloth to ensure a good connection with fittings and to remove grease, dirt, and oxidation.

A saw with a higher number of teeth per inch will make a cleaner cut. If soft tubing is being cut, cap the end of the tube on the unused side of the cut. This eliminates the danger of chips entering the tubing. It also seals the tubing against moisture and protects it until used. When using hard copper tubing, cap or plug the ends of the unused section.

Caution

Filings and Chips in Tubing

It is important that no filings or chips of any kind enter the tubing. Any foreign object entering the tubing may cause restrictions or cause damage to valves.

Cutting usually leaves some sharp burrs on the cut ends. Burrs must be removed by reaming (scraping with a pointed tool). Most tubing cutters have a reamer.

Squaring and Reaming Tubing End

Remember to wear gloves and eye protection when using files and deburring tools.

1. File the end of the tubing with a 10″ smooth mill file to make the end square. This will provide the end with the full wall's thickness, **Figure 8-13**.
2. Lightly file the outside edge of the tubing to remove any burrs.
3. Use a reamer or deburring tool to remove inside burrs, **Figure 8-14**.

8.4 Bending Tubing

It takes practice to become good at bending tubing. Special bending tools are not needed for smaller size tubing used in domestic appliances. However, a much neater and more satisfactory job is possible with such tools.

Copyright Goodheart-Willcox Co., Inc.

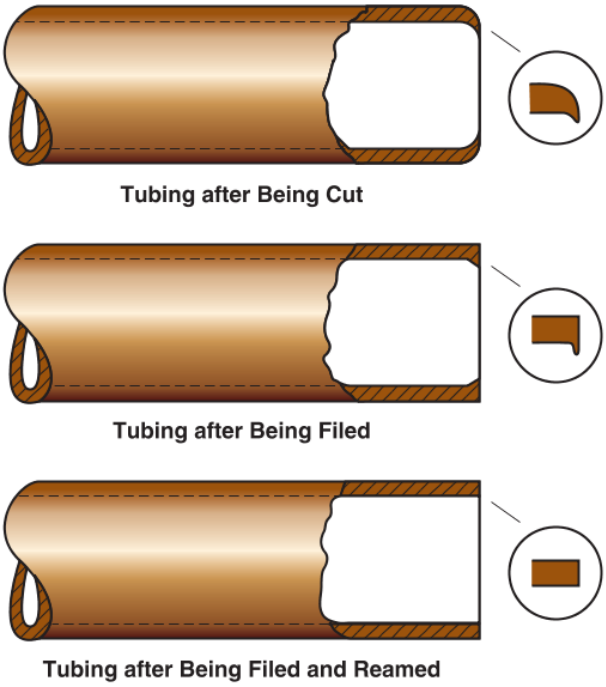

Goodheart-Willcox Publisher

Figure 8-13. The cut end of copper tubing must be properly squared and reamed to ensure a leakproof connection.

Tubing should be bent so that it does not place any strain on the fittings after installation. Be very careful when bending the tubing to keep it round. Do not allow the tubing to kink, flatten, or buckle. This could interfere with refrigerant flow and pressure. The minimum radius for a 90° tubing bend is five times the diameter of the tubing, as shown in **Figure 8-15**.

Tubing should be bent slowly and carefully. Use as large a radius as possible. This reduces the amount of flattening. It is also easier to bend a large radius. Do not try to make the complete bend in one operation. Instead, bend the tubing gradually. There is less danger that the sudden stress will break or buckle the tubing.

Using a ***bending spring*** makes bending tubing easier and reduces the danger of flattening the tubing while bending it. Bending springs are available in a variety of sizes, and they can be used both inside and outside the tubing, **Figure 8-16**. Bending springs are used internally for making bends near the end of the tubing. To bend long lengths of tubing in the middle, use the bending spring externally. The same bending spring can be used both internally and externally on different diameter tubing. For example, an internal bending spring for 1/2″ tubing may be used as an external bending spring for 1/4″ tubing.

Deburring Tools

Using a Deburring Tool

Ritchie Engineering Co., Inc. – YELLOW JACKET Products Division

Figure 8-14. Deburring tools consist of a handle used to hold a blade, which is used to remove an inside burr.

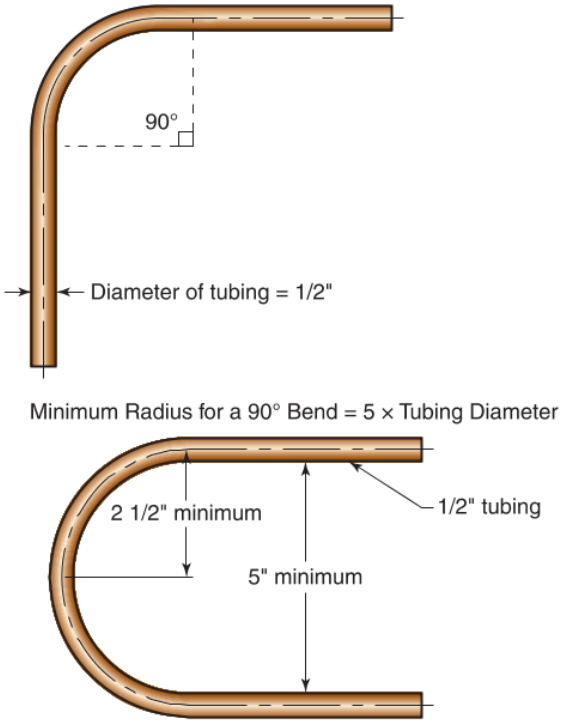

Goodheart-Willcox Publisher

Figure 8-15. The minimum safe radius for a 90° bend in copper tubing is five times the diameter of the tubing.

Copyright Goodheart-Willcox Co., Inc.

Bending Springs

Using a Bending Spring

Mastercool Inc.; Ritchie Engineering Co., Inc. – YELLOW JACKET Products Division

Figure 8-16. These bending springs are used to bend 1/4″ through 3/4″ tubing. A bending spring can be fitted either outside or inside the copper tubing before it is bent.

Bending springs tend to bind on the tubing after the bend. The recommended removal method is twisting the spring. This may be done easily. This changes the spring diameter slightly so the grip on the tubing is released.

Pro Tip

Bending and Flaring Tubing

When using a bending spring externally, always remember to make any necessary bends before flaring the tubing or attaching any connectors. An internal spring can be used either before or after flaring the tubing.

Many lever-type benders are designed to bend more than just one size of tubing, see **Figure 8-17**. Common size compatibilities are 3/16″, 1/4″, 5/16″, and 3/8″ tubing. The calibrated markings allow the technician to make accurate left-hand, right-hand, and offset bends.

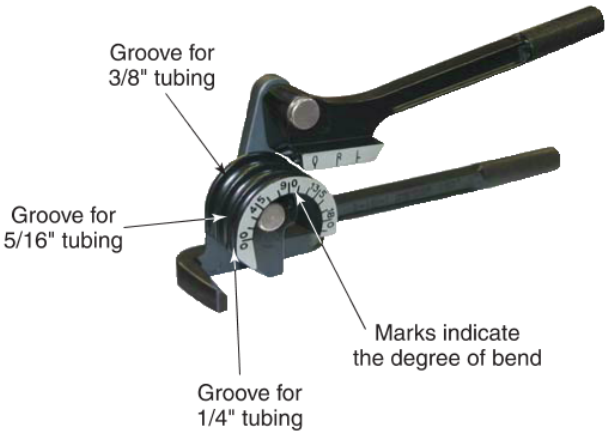

Mastercool Inc.

Figure 8-17. This lever-type bender can safely bend 1/4″, 5/16″, and 3/8″ tubing.

Bending with a Lever-Type Tubing Bender

1. Place the tubing in the lever-type bender, **Figure 8-18A**.
2. Line up the mark on the tubing with both the zero mark on the degree of bend and the zero mark on the lever, **Figure 8-18B**.
3. In one continuous motion, pull the tubing lever until the zero on the lever aligns with the desired bending angle, **Figure 8-18C**. If the tubing pulls back after pressure is released, check that the bend is still the proper angle. If it is less, bend the tubing just slightly past the desired angle number. This should account for any tubing pullback.

8.5 Connecting Tubing

Tubing walls are too thin for threading. Therefore, other methods of joining tubing to tubing and tubing to fittings must be used. The four common methods are:

- Flared connections.
- Soldered connections.
- Brazed connections.
- Swaged connections.

8.5.1 Flared Connections and Fittings

A ***flare*** is an enlargement at the end of a piece of tubing by which the tubing is connected to a threaded fitting using a flare nut. When a flare is used to connect a piece of tubing to a fitting, the threaded flare nut on the tubing forces the flare to seal against the lip of the fitting.

Copyright Goodheart-Willcox Co., Inc.

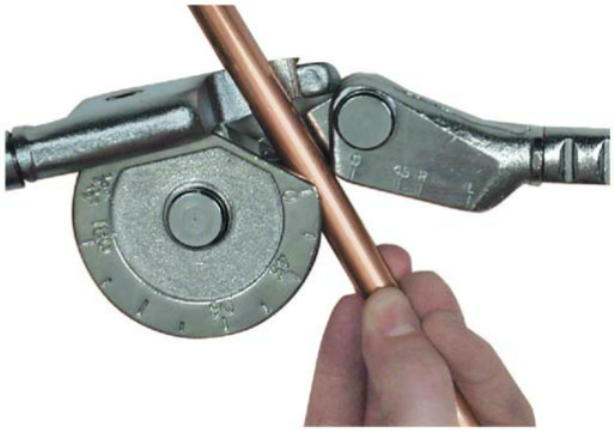

Step 1—Insert Tubing

Step 2—Align Zero Marks

Step 3—Bend to Degree Mark

Uniweld Products, Inc.

Figure 8-18. Using a lever-type bender.

To connect tubing to a flare fitting, the end of the tubing must be flared. A correctly formed flare is squeezed tightly between the flare nut and the fitting. When created correctly, a flare produces a vapor-tight seal. Special tools are used for making flares, **Figure 8-19**.

Pro Tip

Working with Brittle Tubing

If tubing splits while being flared, it may be due to applying too much pressure or simply the age of the tubing. Old tubing becomes brittle after a period of use and is not easily flared to a satisfactory standard. To remedy this brittle condition, try annealing the tubing before flaring it.

Single Flares

Single flares are flares that are made of one layer or a single thickness of tubing. Most flares are made at a 45° angle to the tubing. These fittings are referred to as SAE-type fittings. Flares on steel tubing, however, are usually made at a 37° angle. These are referred to as JIC or AN fittings. These types of fittings are flared to a shallower angle because steel tubing is harder to flare than copper tubing.

Single Flaring Procedure

Before flaring, make the end of the tubing straight and square, as explained earlier in this chapter. Refer to **Figure 8-20** as you read through the following procedure:

1. Place the flare nut on the tubing with the open threaded end facing toward the end of the tubing where the flare will be made.

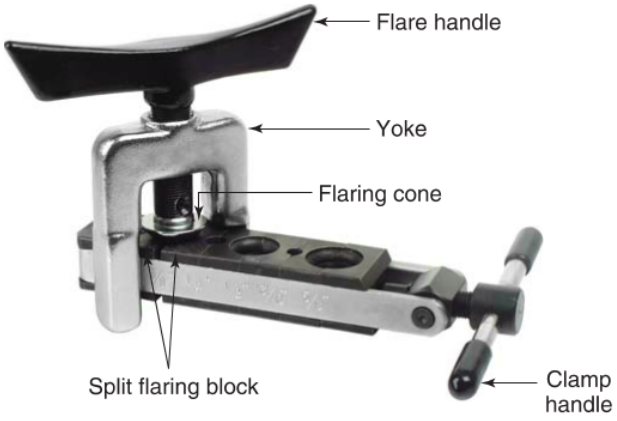

Uniweld Products, Inc.

Figure 8-19. This flaring tool is used for making single flares on copper tubing. When the yoke is removed and the handle is loosened, the split flaring block opens, making it easy to insert and clamp the tubing in place for flaring.

Copyright Goodheart-Willcox Co., Inc.

Inserting the Tubing in the Flaring Block

Inserting the Flaring Cone

Ritchie Engineering Co., Inc. – YELLOW JACKET Products Division

Figure 8-20. Forming a single flare on copper tubing.

2. Insert the tubing in the flaring block so that the flaring end extends above the surface of the block approximately 1/16″ or to manufacturer specifications. This provides enough metal to form a full flare. If the tubing extends above the block too much, the flare will be too large in diameter and the flare nut will not fit over it. If the tubing does not extend above the block, the flare will be too small.
3. Tighten the flaring block's clamp so the tubing cannot move.
4. Put a drop of refrigerant oil on the flaring cone where it will contact the tubing.
5. Mount the yoke onto the flaring block.
6. Turn the flare handle clockwise to tighten the flaring cone against the tubing end one-half turn and back it off one-quarter turn.
7. Advance the flaring cone by turning the flare handle clockwise three-quarters of a turn and again backing it off one-quarter turn.
8. Repeat the forward and backward pattern until the flare is fully formed. Do not tighten the flare handle too much. This would thin the wall of the tubing at the flare and weaken it.
9. Back off the flaring cone by turning the flare handle counterclockwise.
10. Remove the yoke from the block.
11. Open the block by unscrewing the clamp handle.
12. Remove the tubing from the flaring tool.

Double Flares

Double flares are made with a double thickness of tubing metal in the flare surface. These flares are stronger than single flares and rarely cause problems if properly made. Double flares are recommended only for larger size tubing, 5/16″ and over. Such flares are not easily formed on smaller tubing.

Double flares are formed with special tools. Some flaring tools have double flare adapters. These make it possible to form either a single or a double flare.

Double Flaring Procedure Using Adapters

Before flaring, make the end of the tubing straight and square, as explained earlier in this chapter. Refer to **Figure 8-21** as you read through the following procedure:

1. Place the flare nut on the tubing with the open threaded end toward the end of the tubing where the flare will be made.
2. Insert the tubing in the flaring block so that the end to be flared extends above the surface of the block. The flaring adapter should be set on the block so it can be used to gauge how far the tubing should extend. The tubing should extend beyond the block so it is even with the wide part of the adapter. This provides enough metal to form a full flare.

Copyright Goodheart-Willcox Co., Inc.

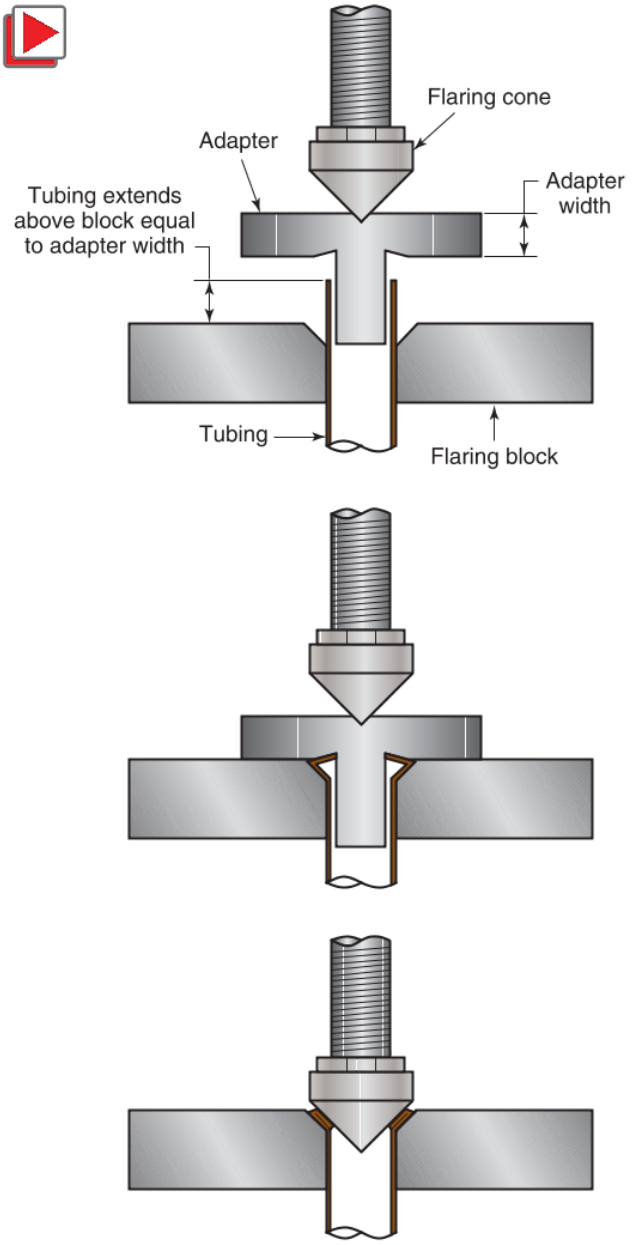

Goodheart-Willcox Publisher

Figure 8-21. Forming a double flare using a flaring tool and adapter.

3. Tighten the flaring block's clamp so the tube cannot move.
4. Put a drop of refrigerant oil on the male end of the flaring adapter.
5. Place the male end of the flaring adapter inside the tubing.
6. Mount the yoke onto the flaring block.
7. Turn the flare handle clockwise to tighten the flaring cone against the flaring adapter until the flaring adapter is tightly pressed against the flaring block.
8. Turn the flare handle counterclockwise to back up the flaring cone an inch or two away from the flaring adapter.
9. Remove the flaring adapter from the tubing.
10. Advance the flaring cone by turning the flare hand clockwise three-quarters of a turn and backing it off one-quarter turn.
11. Repeat the forward and backward pattern until the flare is fully formed. Do not tighten the flaring handle too much. This would thin the wall of the tubing at the flare and weaken it.
12. Back off the flaring cone by turning the flaring handle counterclockwise.
13. Remove the yoke from the block.
14. Open the block by unscrewing the clamp handle.
15. Remove the tubing from the flaring block.

Not all double flares are made using adapters. Punch tools can also be used to form a double flare.

Double Flaring Procedure Using Punches

Before flaring, make the end of the tubing straight and square, as explained earlier in this chapter. Refer to **Figure 8-22** as you read the following procedure:

1. Place the flare nut on the tubing with the open threaded end toward the end of the tubing where the flare will be made.
2. Insert the tubing in the flaring block so that the end being flared is even with or slightly above the block.
3. Tighten the flaring block's clamp so the tube cannot move.
4. Select the proper punch with a long central shaft and concave outer punch.
5. Put a drop of refrigerant oil on the parts of the punch that will contact the tubing.
6. Insert the central shaft into the tubing.
7. Gently tap the punch with a ball peen hammer.
8. Remove the punch from the tubing.
9. Select a punch with a long central shaft and beveled shoulders.

Copyright Goodheart-Willcox Co., Inc.

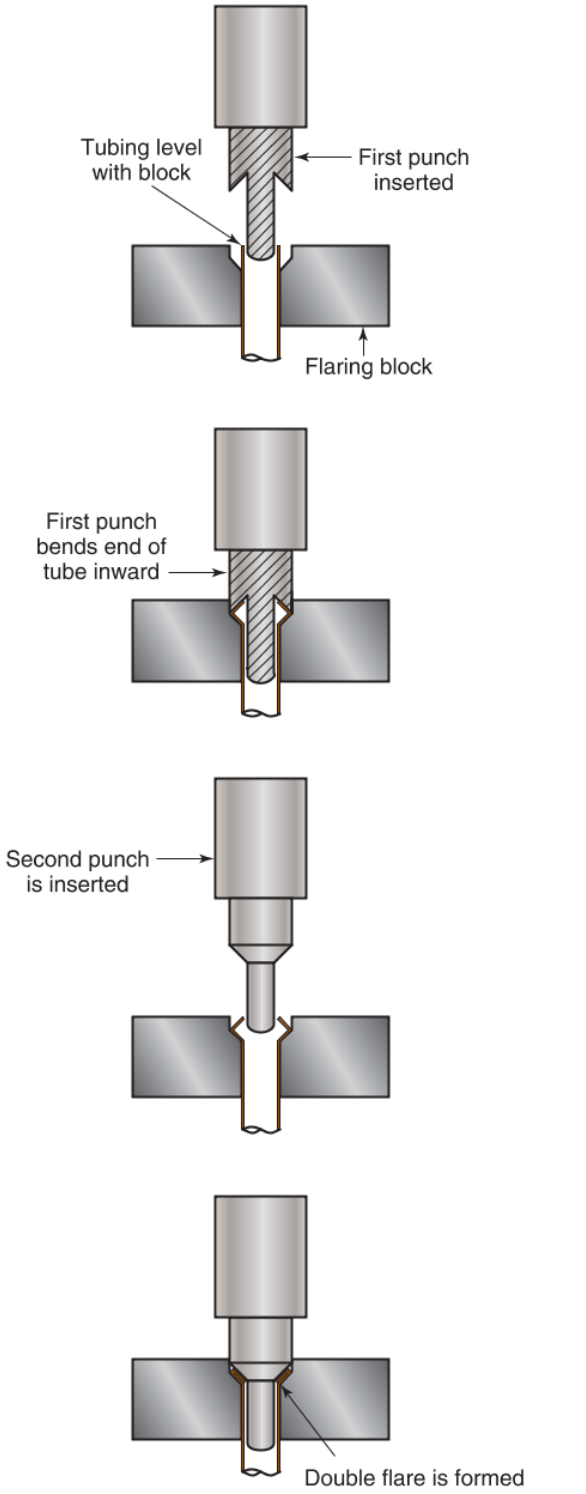

Goodheart-Willcox Publisher

Figure 8-22. Using simple block and punch tools, a technician can form double flares on copper tubing.

10. Insert the central shaft into the tubing.
11. Position the bottom of the beveled shoulders at the top of the partially flared tubing.
12. Gently tap the punch with a ball peen hammer to compress the two walls of the flare together into a double flare.
13. Remove the punch.
14. Open the flaring block by unscrewing the clamp handle.
15. Remove the tubing from the flaring block.

Flare Fittings

As mentioned earlier, flared connections are generally used to connect soft copper tubing to fittings. The accepted standard for refrigeration is a forged fitting. Some of these have National Pipe Threads (NPT). Others have Unified National Fine (UNF) threads. There are many different types of flare fittings. See **Figure 8-23**.

Fittings are usually made of drop-forged brass. They are accurately machined to form the threads, the hexagonal shapes for wrench attachment, and the 45° edge that fits against the tubing flare. Threaded fittings can be easily damaged and must be handled carefully.

All fitting sizes are based on the tubing size. For example, a 1/4″ flare nut attaches 1/4″ tubing to a flared fitting even though it has 7/16″ UNF internal threads and uses a 3/4″ wrench to turn it.

Reducing fittings are used to connect a larger diameter tube to a smaller diameter tube. Reducing fittings are always called by the larger tubing they will accept followed by the word "to" and then the smaller tubing diameter. For example, when attaching 1/4″ tubing to 5/16″ tubing, a 5/16″ to 1/4″ reducing flare fitting is used.

Pro Tip

Metric Tubing Fittings

Metric tubing requires metric fittings. These are very similar to US Customary fittings and are used in the same way. The technician must be careful not to mix US Customary fittings with metric fittings.

8.5.2 Soldered and Brazed Connections

Many tubing and fitting connections are made by either soldering or brazing. In HVACR work, soldered joints are used only for water pipes and drains. Brazed joints are used for tubing that circulates refrigerant. The difference between soldering and brazing processes is the temperature at which the filler material

Copyright Goodheart-Willcox Co., Inc.

Mueller Refrigeration Company, Inc.

Figure 8-23. These are some of the more common flare fittings used in refrigeration and air conditioning work.

BernzOmatic

Figure 8-24. Propane and MAP gas kits are commonly used for soldering. Including pressurized oxygen can increase flame temperature and joining speed.

flows. If the temperature required to melt the filler alloy is below 840°F (450°C), it is considered *soldering*. If the temperature required to melt the filler alloy is above 840°F (450°C) but below the melting point of the fitting and tubing metal, it is referred to as *brazing*.

Soldering and Brazing Equipment

An HVACR technician uses soldering and brazing for many jobs. Soldering does not require as much heat as brazing. Common fuel for soldering includes propane and MAP gas, **Figure 8-24**.

For brazing, air-acetylene torches furnish a clean flame at a temperature of 2500°F (1400°C). With compressed air, the torch flame temperature is about 2500°F to 2800°F (1400°C to 1500°C). Acetylene is supplied in cylinders of 10 ft^3 or 40 ft^3 capacity for portable welding and brazing outfits. Air-fuel and oxyfuel torches burn at high temperatures sufficient for brazing, **Figure 8-25**.

Worthington Since 1955

Figure 8-25. An air-acetylene kit has only one gas cylinder. Some torch handles use a switch and button ignition function.

Copyright Goodheart-Willcox Co., Inc.

Safety Note

Phosgene Gas

Phosgene gas is a by-product of some refrigerants when they are exposed to an open flame or extreme heat. This by-product is extremely dangerous, even in trace amounts. Follow refrigerant recovery procedures and practices to reduce contact with phosgene gas.

Oxyacetylene brazing equipment is the most effective type of equipment to use for brazing joints. It is capable of brazing joints more quickly than any other type of torch. If the brazing is done properly, the joints will be strong and leak free. A small, portable system is shown in **Figure 8-26**.

Oxyacetylene describes a torch configuration that mixes pure oxygen and acetylene. The mixture burns with a maximum temperature of 6000°F (3300°C). The hotter flame will bring the joint to brazing temperature quickly. Since materials transfer heat at a fixed maximum rate, the hotter flame actually reduces the amount of heat transferred down the copper tubing because the flame does not need to be held to the joint as long. This trait is especially useful when connecting a valve, compressor, filter-drier, or other refrigeration equipment. The technician is able to braze replacement items in place without damaging them through heat transfer.

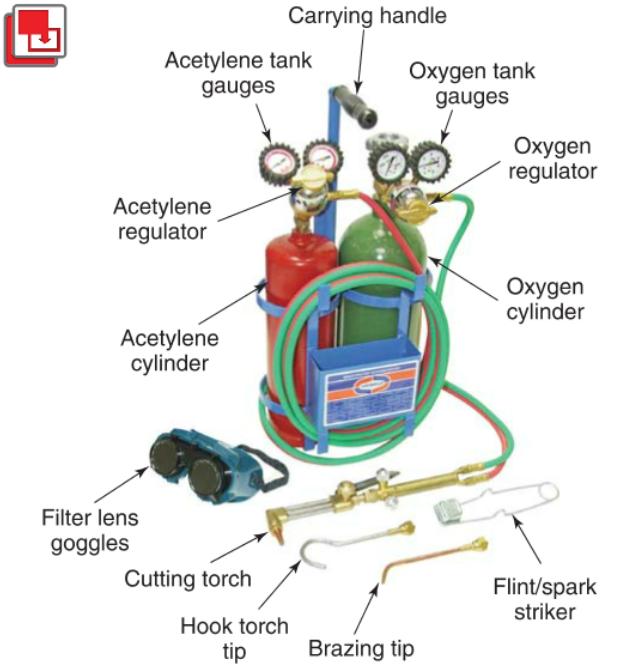

Uniweld Products, Inc.

Figure 8-26. This portable oxyacetylene outfit has two tanks with regulators and gauges, as well as different torch tips.

Additional methods for controlling the transfer of heat during brazing include using specialty tips, heat guards, and wet rags. A brazing hook allows a technician to apply heat over a single area from multiple directions, helping to heat all sides of the joint simultaneously. Brazing hooks bring a joint up to brazing temperature more quickly, which reduces the amount of heat transferred to surrounding objects, **Figure 8-27**.

A heat guard can also be used to protect other areas from the flame and heat. See **Figure 8-28**. Wrapping tubing in a damp rag is another common practice used to prevent heat from traveling through the tubing to other objects. The wet rag absorbs heat that the tubing conducts, keeping the temperature down and

Uniweld Products, Inc.

Figure 8-27. Brazing hooks distribute flames over multiple sides of a joint simultaneously.

Uniweld Products, Inc.

Figure 8-28. A heat guard can be used to protect areas from flame and heat.

Copyright Goodheart-Willcox Co., Inc.

preventing excessive heat from flowing to other system components. Gel, foam, paste, and spray products can be applied to each side of a joint before brazing. These products absorb heat and limit heat transfer to protect devices connected nearby, **Figure 8-29**.

Pro Tip

Preventing Heat Damage

Use sheet metal or boards to protect surfaces during brazing and soldering operations, such as when assembling piping along a wall. This will help prevent the materials from burning, discoloring, or scorching.

Safety Note

Flashback Arrestors and Check Valves

If you are using an oxyfuel torch, be sure to use check valves or flashback arrestors to prevent the flame from traveling inside the hose to the supply tank. These devices are installed between the torch and the supply hoses or between the hoses and the regulators. Check valves prevent gas flow from changing direction, which could cause a flashback. A ***flashback arrestor*** is a check valve with a built-in flame arrestor for an added layer of protection if a flashback does occur, **Figure 8-30**.

LA-CO Industries Inc.

Figure 8-29. Various types of heat blocking products can be used to protect sensitive parts of a system.

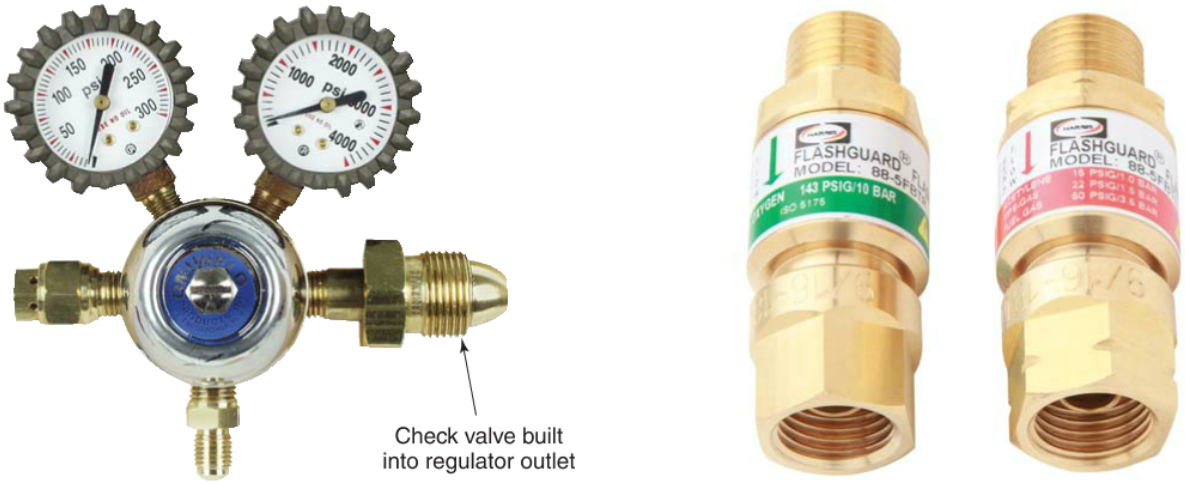

Uniweld Products, Inc.; Harris Group

Figure 8-30. Torch safety devices. A—Check valves are often built into a regulator's outlet to prevent a flashback from traveling through the supply hose back to the tank. B—Flashback arrestors may be installed between the torch tip and the supply hoses.

Copyright Goodheart-Willcox Co., Inc.

Types of Flames

Correct use of oxyacetylene requires metering of the flow of oxygen and acetylene. The oxygen tank and the acetylene tank each have a pressure regulator and a set of gauges. One gauge in each set registers tank pressure, and the other displays the pressure at the torch. For brazing, a torch tip several sizes larger than the one used for soldering should be used. Follow the torch manufacturer's recommendations for pressure settings and tip sizes.

Safety Note

Proper Torch Lighting

Always light a torch with a flint lighter. Using matches or a cigarette lighter places your hand too close to the flame. Never point the torch (lit or unlit) toward an open flame or source of sparks.

The acetylene valve adjusts the flame size. After opening the acetylene valve, slowly turn the oxygen valve to obtain the type of flame required. The proper balance of oxygen and acetylene is critical to creating brazed joints correctly. A technician can tell when the flame is properly adjusted by the appearance of the torch flame, **Figure 8-31**.

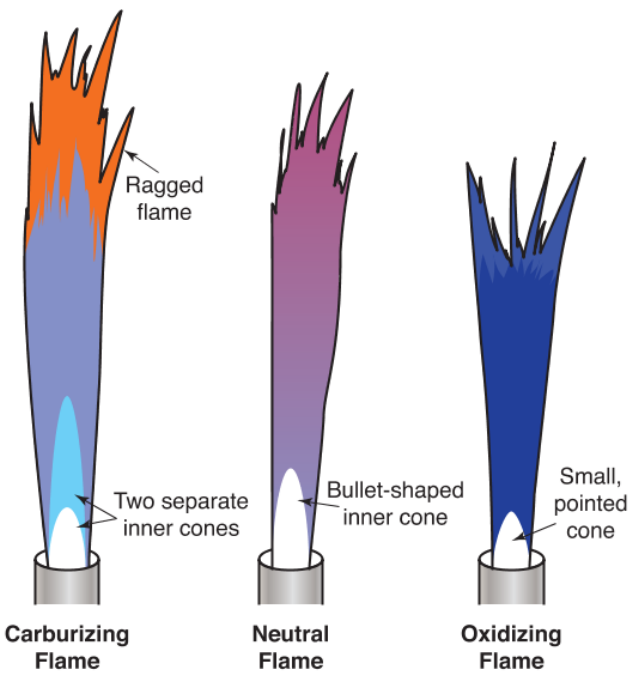

Goodheart-Willcox Publisher

Figure 8-31. This figure illustrates the different types of oxyacetylene flames. A neutral flame is the most efficient for brazing and soldering joints.

A ***carburizing flame*** has too much acetylene. In a carburizing flame, the outer flame ends in a ragged orange-red flame. There will appear to be two separate inner cones in the flame: a small white cone and a longer light blue cone. A carburizing flame also generates a lot of smoke.

An ***oxidizing flame*** has more oxygen than a neutral flame. The inner cone of an oxidizing flame is small, sharply pointed, and white. An oxidizing flame also hisses as it burns. The louder the flame hisses, the more oxidizing it is.

A ***neutral flame*** is most efficient flame in brazing. It has just the right mixture of oxygen and acetylene. A neutral flame is recognized by its single, bullet-shaped, bluish-white inner cone and an outer flame with a bit of reddish-purple at the tip. A neutral flame burns relatively quietly and does not generate smoke.

Safety Note

Avoiding Flammable Materials

Keep the flame away from any combustible substance. Such substances include oil, wood, paper, paint, and cleaning fluids. Also, keep the flame away from containers, such as barrels, tubing, or cylinders, that may have contained flammable material at one time.

Soldering

Soldering (often called soft soldering) is a process of joining metal objects by heating the objects to a temperature below 840°F (450°C) and then applying a filler metal with a melting point below 840°F (450°C). The metal objects remain solid, but the filler metal melts and fills the gaps between the two objects. Soldered joints are weaker than brazed joints, so the process is used only on water supply lines and drain lines, not refrigerant-circulating lines.

Soldering is an adhesion process. In adhesion processes, one part is bonded to a second part by a third material. The molten solder is drawn into the gaps between the tube and fitting by capillary action.

Capillary action is the movement of a liquid substance between two solid substances due to the molecular adhesive forces between the solids overcoming the liquid's cohesive forces. The solder flows into the pores of the surface of the metals being joined. As the solder solidifies, a strong bond forms.

The filler metal, which is called solder, is usually used in wire form, **Figure 8-32**. Because the melting point of the filler metal needs to be so low, it is typically made of soft metals like tin, lead, and silver. Surfaces in inconvenient locations can be easily reached with solder by bending the wire to the needed shape.

Copyright Goodheart-Willcox Co., Inc.

Harris Group

Figure 8-32. Solder is commonly available as wire coiled onto spools.

The selection of a solder is based on several factors, including the pressure and the temperature of the line. A tin-lead solder is appropriate for moderate pressures and temperatures. It melts at 360°F (182°C) and flows between 420°F (213°C) and 460°F (238°C). For higher pressures or greater joint strength, a 95/5 tin-antimony solder is used. This mixture contains 95% tin and 5% antimony. A 95/5 tin-antimony solder melts at 450°F (232°C) and is fully liquid at 465°F (241°C), **Figure 8-33**. A tin-antimony alloy is usually satisfactory for soft soldering. A 95/5 tin-antimony solder is recommended for soldered joints subjected to very low temperatures.

Safety Note

Soldering Eye Protection

When soldering, be sure to wear eye protection with a No. 2 filter lens or darker.

Do not solder with 100% tin. Pure tin may slowly disintegrate when exposed to cold.

Creating a good solder joint consists of cleaning the parts to be joined, applying flux, and assembling the parts. ***Flux*** is a paste, powder, or liquid that prevents oxide from forming on the surfaces to be soldered and aids solder flow, **Figure 8-34**. As soon as the heated joint reaches the flowing temperature of the solder, the solder is applied and flows into the joint. When the solder cools, it solidifies, sealing and connecting the surfaces. The process of soldering a joint is often referred to as "sweating" a joint.

Harris Group

Figure 8-34. Flux is available in a variety of forms and amounts.

Solder Alloys					
Composition Percent				Temperature °F	
Tin (Sn)	Lead (Pb)	Antimony (Sb)	Silver (Ag)	Melts	Flows
50	50			360	420
40	60			360	460
60	40			360	375
95		5		452	464
96			4	430	430
94			6	430	535

Goodheart-Willcox Publisher

Figure 8-33. This chart shows the melting and flowing temperatures for various solder compositions.

Copyright Goodheart-Willcox Co., Inc.

Applying Flux Paste

Assembling the Joint and Wiping Away Excess Flux

Heating the Joint

Applying Solder to the Joint

Goodheart-Willcox Publisher

Figure 8-35. Soldering a joint requires careful preparation and precision. Applying the correct amount of flux and heating the tubing properly are essential to creating a leakproof joint.

Soldering Procedure

After measuring, cutting, and setting up everything to exact specifications, you are ready to begin soldering. Refer to **Figure 8-35** as you read the following procedure:

1. Make sure the tubing and fittings being connected are dry.
2. Ream or deburr the inside of the tubing with a reamer or deburring tool, making sure that no pieces of metal enter the tubing.
3. Clean the exterior of the tubing that will be soldered with emery cloth, an abrasive pad, or a wire brush.
4. Apply flux to completely cover the outside of the tubing where the parts will be in contact. The flux coating on the tubing should extend slightly past where the edge of the fitting will be. The coating of flux should be thin but thorough.
5. Assemble the tubing and fitting together.
6. Remove excess flux on the tubing and fitting by wiping them with a clean dry cloth.
7. Heat the tubing and fitting by directing the torch flame at the tubing, two or three inches back from the fitting. Position the torch so that the inner cone of the flame is touching the tubing. Slowly move the torch around the circumference of the tubing or use a hook torch tip to heat all sides evenly. Gradually move the torch toward the fitting. The joint between the fitting and the tubing should be heated last. The point of this step is to heat the joint and surrounding area to a temperature above the melting point of the solder.

Copyright Goodheart-Willcox Co., Inc.

8. After the tubing and fitting are sufficiently heated (flux has melted and boiled away, and the copper has a slightly dull appearance), redirect the flame to the center of the fitting, away from the joint. Touch the solder to the bottom of the joint. If the solder does not quickly melt, withdraw the solder and continue heating the joint. Do *not* direct the flame onto the solder to melt the solder! Proper temperature for soldering has been achieved only when solder melts upon contact with the heated fitting. Feed the solder around the circumference of the joint to completely fill the joint. Capillary action should draw solder into the joint. The solder joint is completely filled when a ring of solder is visible all around the tubing where it enters the fitting.
9. Shut off the torch and immediately wipe the joint with a damp rag to remove excess solder and flux.

Pro Tip

Joining Different Tubing Sizes

Sometimes a small tube is inserted into a larger tube and soldered directly together. The smaller tube should extend into the larger tube the same distance as the diameter of the larger tubing. For example, if 1/4″ tubing is placed into 5/16″ tubing, the smaller tubing should extend into the larger tubing by 5/16″. Measure carefully when connecting tubing in this way.

Brazing

Brazing (sometimes called silver brazing) is a process of joining metal objects by heating the objects to a temperature above 840°F (450°C) and then applying a filler metal with a melting point that is above 840°F (450°C), but below the melting point of the objects being joined. Like soldering, brazing is an adhesion process. Brazing is one of the best methods of making leakproof connections.

During the brazing process, capillary action draws molten filler metal into the small gaps between the tubing and fitting. When the filler metal cools, it adheres strongly to the tubing and fitting. Brazing filler metals are typically stronger than solder because the filler metals used in brazing have a higher melting point than solder.

There are various brazing alloys on the market. Brazing filler metals can join similar and dissimilar metals at brazing temperature. The brazing filler metals used in refrigeration work typically melt at temperatures in the range of 1000°F to 1500°F (538°C to 816°C).

Most filler metals used for brazing copper tubing fall into two categories: alloys containing 5% to 60% silver and copper alloys that contain some phosphorus. See **Figure 8-36**. These two classes vary in melting, flowing, and fluxing characteristics. Strong joints can be made with either class of filler metal. The strength of a brazed copper joint depends more on the clearance between the tubing and the socket of the fitting than on the type of filler metal used. Most brazing alloys used in refrigeration work have 15% to 45% silver content. A brazing alloy with 45% silver content starts melting at 1120°F (604°C) and flows at 1145°F (618°C).

Silver Brazing Alloys

Phosphorus Brazing Alloys

Harris Group

Figure 8-36. Various brazing alloys.

Copyright Goodheart-Willcox Co., Inc.

Caution

Cadmium Fumes

Carefully check the specifications of the brazing alloy used. If it contains any amount of cadmium (Cd), be sure that the work space is well ventilated. Do not breathe any of the fumes. Cadmium fumes must be kept away from the eyes and skin. They are very poisonous.

Safety Note

Brazing Eye Protection

It is advisable to use eye protection with a No. 4 or darker filter lens during brazing procedures.

All air must be removed from the tubing being brazed. This can be best done by purging the tubing with either nitrogen or carbon dioxide. ***Purging*** is the process of removing unwanted air, vapors, dirt, and moisture from a system by flushing them into the atmosphere with a compressed gas. Any oxygen inside tubing may promote the formation of oxide on the interior surface. Also, any oil inside the tubing or part may be vaporized by the heat of the torch. Oil vapor mixed with air will explode if ignited. Purging with a nonflammable gas, such as nitrogen or carbon dioxide, will minimize this hazard. It is recommended to set nitrogen to flow through the inside of any brazing joint at low pressure, such as 1 to 2 psi.

Caution

Purging Gases

Never use a refrigerant, oxygen, or compressed air for purging.

Be sure to heat both pieces that will have the alloy adhered to them. When heating a copper-to-steel joint, heat the copper first. Copper takes more heat because it carries the heat away faster. When brazing temperature is reached, apply the brazing rod to the joint. You may need to put some flux on the brazing rod to help the rod flow quicker.

Pro Tip

Brazing a Capillary Tube

When brazing a capillary tube, do not let too much brazing material run into the end of the tube. It might partially or completely close the passageway of the capillary tube.

Brazing Procedure

After measuring, cutting, and setting up everything to exact specifications, you are ready to begin brazing.

1. Ream or deburr the inside of the tubing with a reamer or deburring tool.
2. The parts to be brazed must be carefully cleaned and accurately fitted. Use a stainless steel wire brush or fine-grade sand cloth to clean the exterior of the tubing from the end to just beyond the point where the edge of the fitting will be. Do not use emery cloth, as any of its grit that accidentally enters the system can cause damage.
3. Clean the internal surfaces of the tubing and the fitting with an abrasive, such as a stainless steel wire brush or stainless steel wool rolled on a rod.
4. Degrease the parts and clean the joints thoroughly.
5. Apply the flux recommended for the brazing alloy. Follow the manufacturer's instructions. Generally, it is best to apply a thin but thorough coating of flux. This should cover from the end of the tubing to just beyond where the edge of the fitting will be (the same area cleaned with an abrasive).
6. Fit the joints closely and support all parts. The parts must have sufficient surface area contact, such as a tube sliding into a fitting (not a press fit), **Figure 8-37**. The contacting surfaces need not be very large. A joint clearance of 0.001" to 0.005" offers the maximum joint strength and soundness. Excessive joint clearance can lead to cracking under stress or vibration. If the parts are dented or are out of round, these faults must be corrected before brazing. It is important to support all the parts securely so they will not move during brazing.
7. Heat the tubing first. Keep the torch moving constantly in a figure-eight motion. Never hold the flame in one spot. It should be moved around the entire brazing area. Using a torch tip that is larger than the tip used for soldering allows a soft flame and a large quantity of heat without excess pressure or "blow." A slight feather on the inner cone of the flame is good. Keep the joint surrounded by the flame during the entire operation, with the tip of the flame's inner cone just touching the surface of

Copyright Goodheart-Willcox Co., Inc.

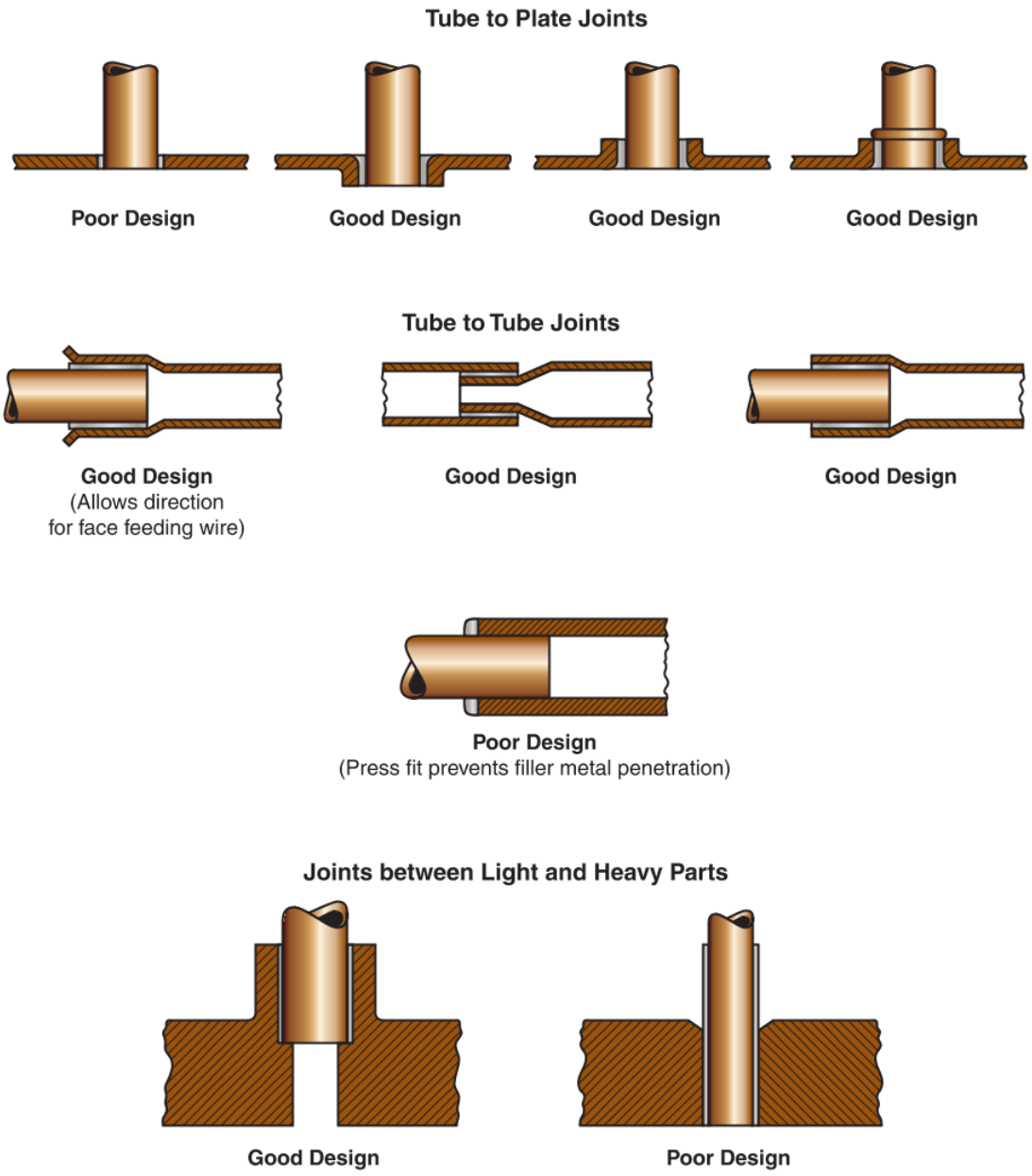

Goodheart-Willcox Publisher

Figure 8-37. Follow these suggestions for making brazed joints. The actual thickness of the brazing material is exaggerated to show its application.

the metal. This heats the metal efficiently and prevents air from getting to the joint.

8. The flux behavior is a good indication of the temperature of the joint as the heating progresses. At 212°F (100°C), the flux will turn somewhat puffy and white. Next, it will bubble and turn white at about 600°F (316°C). At 800°F (427°C), the flux lies flatly on the surface and has a milky appearance. Following this, it will turn into a clear liquid at about 1100°F (593°C). This point is just short of the brazing temperature. During the brazing of a copper base metal, the flame starts to show a green shade as the brazing temperature is reached.
9. Apply a brazing filler rod to the seam between the tubing and fitting at approximately a 30° to 45° angle, as shown in **Figure 8-38**. Pushing the rod at this angle helps draw

Copyright Goodheart-Willcox Co., Inc.

the brazing material into the seam. Keep the flame away from the brazing material. If the filler rod does not melt quickly, withdraw the rod and continue heating the joint. If the filler rod melts, gradually move both the flame and brazing rod around the entire joint, with the rod following the flame. Do *not* directly melt the brazing alloy with the torch.

10. Stop feeding brazing material and remove the flame from the joint when there is an unbroken circle of brazing material around the joint.
11. Allow the finished joint to cool naturally. Shock cooling with water may stress or crack the joint.
12. Clean the joint thoroughly using warm water and a brush. Be sure all flux has been removed. This is always necessary. Flux left on the metals may corrode them or temporarily stop a leak that will only show up later.
13. Visually inspect the brazed joint to see if there are any places where the alloy did not adhere. It is best to watch for poor adhesion (dark cup-shaped areas) as you braze the joint. Then, any corrections can be made during the brazing operation, while the parts are still hot.

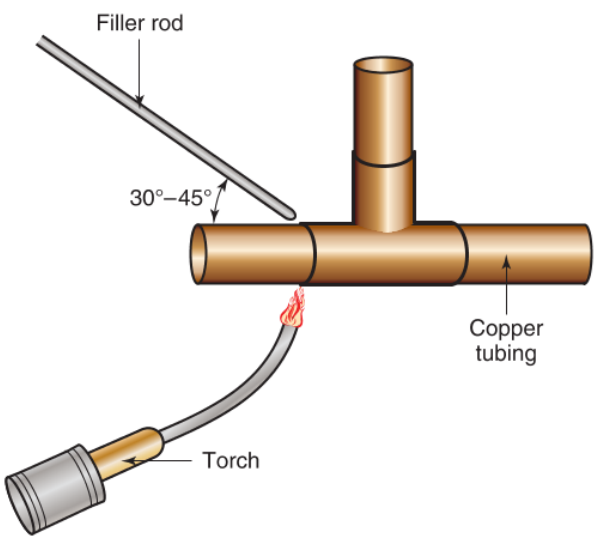

Goodheart-Willcox Publisher

Figure 8-38. While holding the brazing rod at a 35°–45° angle to the fitting, use a slight amount of pressure to help the brazing material enter the space between the tubing and fitting.

8.5.3 Swaged Connections

Two pieces of soft copper, aluminum, or brass tubing of the same diameter can be joined together without using fittings. This is done through swaging. ***Swaging*** is the mechanical enlarging of one end of tubing to allow another piece of tubing of the same diameter to be inserted into the enlarged tubing for a soldered or brazed connection, **Figure 8-39**.

Swaging is a common practice to reduce the use of costly fittings. It is also more convenient to solder or braze one joint than to make two flared connections. The length of the overlap of the two pieces of tubing should equal the outside diameter of the tubing.

There are several types of swaging tools, allowing technicians several options in how to swage a tube. Swaging punch tools include a set of punches and a block, **Figure 8-40**. A swage is made by securing one

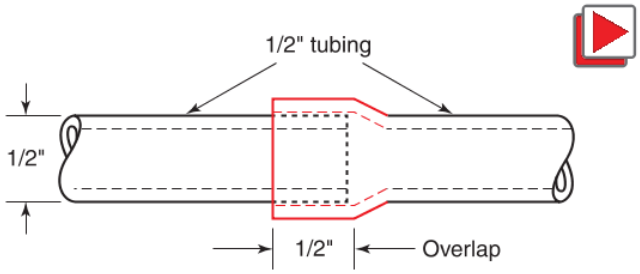

Goodheart-Willcox Publisher

Figure 8-39. These two pieces of soft copper tubing are assembled and ready for soldering or brazing to make a joint. Note that both tubes have the same diameter.

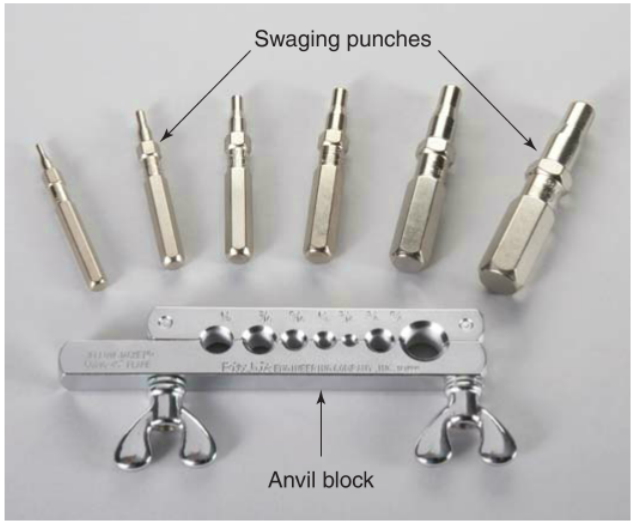

Ritchie Engineering Co., Inc. – YELLOW JACKET Products Division

Figure 8-40. This swaging punch tool set includes a block with different tubing sizes and swaging punches of corresponding sizes.

Copyright Goodheart-Willcox Co., Inc.

end of the tubing in the proper size block opening, inserting the proper size swaging punch, and gently tapping the other end of the swaging punch with a hammer.

A hydraulic swaging tool set includes different size expansion attachments and a hydraulic device. The proper size expansion attachment is secured to the hydraulic device. After inserting the expansion attachment into a tube, operate the lever on the hydraulic device to operate the expansion attachment, which swages the tube, **Figure 8-41**.

A lever swaging tool set includes different size expansion attachments and a lever device, **Figure 8-42**. Secure the expansion attachment for the corresponding tubing size to the lever device. Insert the expansion device end into the tubing and operate the levers to swage the tubing.

Some flaring tools have swaging adapters that enable them to serve as both flaring and swaging tools. They consist of a block and a yoke that is tightened to press the swaging adapter into the tubing, swaging the tube end. See **Figure 8-43**. This type of combination flaring and swaging tool is easy to work with in tight areas.

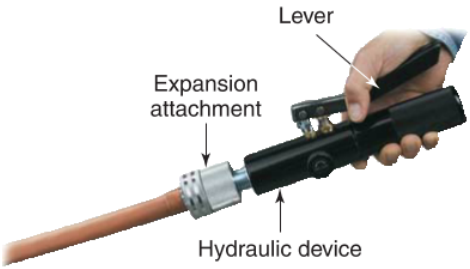

Operating a Hydraulic Swaging Tool

Hydraulic Swaging Tool Set

Mastercool Inc.

Figure 8-41. The compact design of many hydraulic swaging tools allows them to be used in tight spaces.

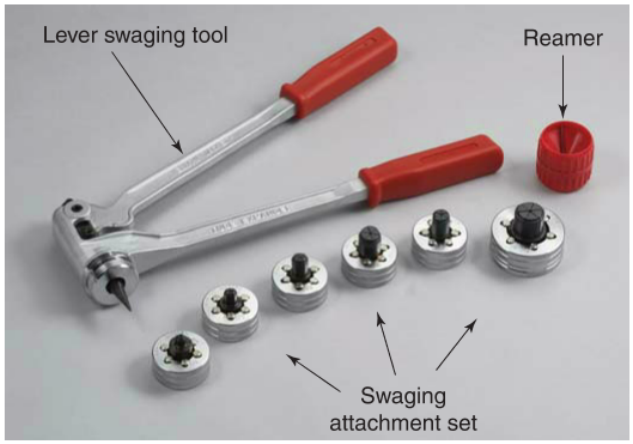

Ritchie Engineering Co., Inc. – YELLOW JACKET Products Division

Figure 8-42. Lever swaging tools come with multiple swaging attachments and are easy to operate.

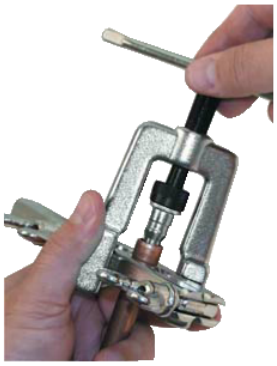

Inserting the Swaging Adapter

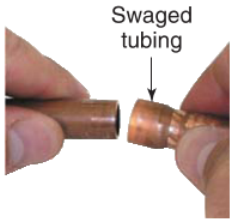

After Swaging

Uniweld Products, Inc.

Figure 8-43. Using a flaring tool with a swaging adapter.

Swaging Tubing with a Swaging Adapter

One tool with different adapters can be used for both flaring and swaging. The steps required to swage tubing with a swaging adapter are similar to the steps involved in flaring tubing.

1. Insert the tubing in the flaring block so that the end being swaged is slightly above the block, approximately one-third the total height of the swage.
2. Tighten the flaring block's clamp so the tubing cannot move.
3. Select the proper swaging adapter.
4. Put a drop of refrigerant oil on the parts of the swaging adapter that will contact the tubing.
5. Insert the correct size swaging adapter into the yoke with the bit facing downward.

Copyright Goodheart-Willcox Co., Inc.

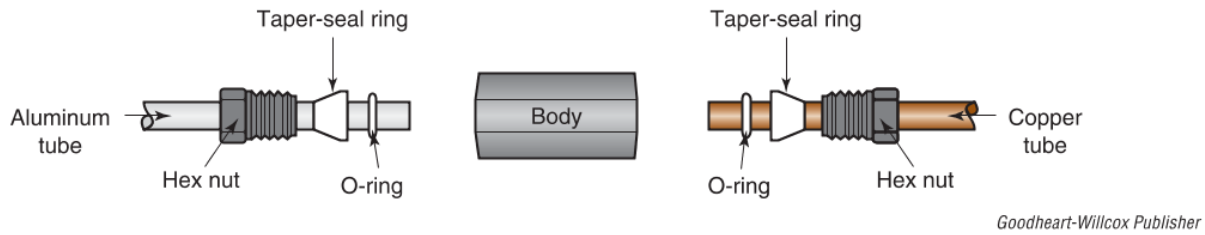

Figure 8-44. Note the hex nut, tapered seal ring, and O-ring on this threaded mechanical fitting.

6. Holding the flaring block and tubing in one hand, use the other hand to slowly tighten down the yoke into the tubing until the desired swage is achieved.
7. Slowly loosen the yoke.
8. Open the flaring block by unscrewing the clamp handle.
9. Remove the tubing from the flaring block.
10. Clean any material on the swage with a deburring tool.

8.5.4 Specialized Tube Couplings

Specialized tube couplings are special fittings used to join aluminum tubing to copper tubing. This requires a process different from joining copper to copper. There are a variety of methods available for joining aluminum to copper. These include threaded mechanical fittings and compression fittings. Such fittings can be used to join aluminum evaporators to copper line or capillary tubes, aluminum evaporators to copper tube manifolds, or stainless steel evaporators to copper inlet and outlet tubing.

Mechanical fittings are used when dissimilar metal joints are required. This often happens in retrofit applications where an aluminum evaporator is connected to copper tubing. Mechanical fittings may also be used when the technician is not familiar with aluminum brazing techniques. Mechanical joints and tube couplings are generally weaker joints than similar soldered or brazed joints and should be used sparingly. **Figure 8-44** shows a threaded mechanical fitting.

8.6 Connecting Pipe

Unlike tubing, which is too thin for threading, both steel pipe and plastic pipe can be joined with threaded fittings. In addition, plastic pipe can also be joined with solvent cement. Both steel and plastic pipe are available with different wall thickness, called ***pipe schedules***, which correlate to the pipe's strength. Schedule 40 and Schedule 80 are the most common schedules used in HVACR work. The higher the pipe schedule number is, the thicker the wall and the stronger the pipe.

8.6.1 Joining Steel Pipe

Air conditioning and refrigeration installations make wide use of pipe fittings with National Pipe Threads (NPT) to join both Schedule 40 and Schedule 80 steel pipe. NPT threads are specially formed V-threads made on a tapered conical spiral. This taper causes the threads to seal as the fitting is tightened. The taper rate for pipe threads is 1 unit of diameter per every 16 units of length. For example, pipe threads taper 1/16″ in diameter for every inch of length, 1/32″ in diameter for every 1/2″ length, or 1/64″ in diameter for every 1/4″ length. NPT sizes are based on the nominal pipe size rather than the measured inside or outside dimensions of the pipe. **Figure 8-45** shows a male thread on a 1/2″ pipe.

Pipe fittings are typically made of black or galvanized iron to connect either black or galvanized steel pipe. The most common types of fittings are the coupling, reducing coupling, union, nipple, 90° elbow, reducing elbow, 45° elbow, and street ell, **Figure 8-46**.

A ***street fitting*** is an angled fitting that is male on one end and female on the other. Street fittings are used in threaded steel pipe fittings, brazed/soldered fittings for copper tubing, and different plastic fittings, too. In the case of steel pipes, a street fitting has male thread on one end and female thread on the other end. The purpose of street fittings is to reduce the number of fittings used for offsets and other configurations.

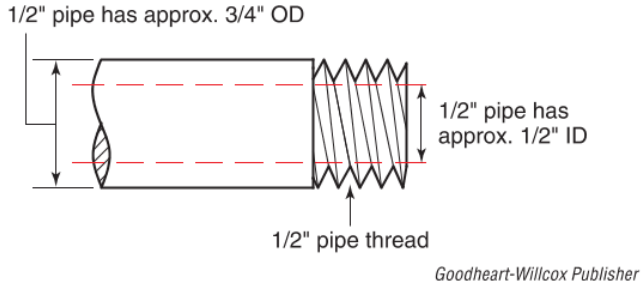

Figure 8-45. This 1/2″ pipe has a 1/2″ male pipe thread.

Copyright Goodheart-Willcox Co., Inc.

Mueller Refrigeration Company, Inc.

Figure 8-46. Pipe fittings are usually made of either galvanized or black iron.

By using several street fittings connected together, an installer can make an offset without having to cut and thread smaller sections of pipe and use fewer fittings overall, **Figure 8-47**.

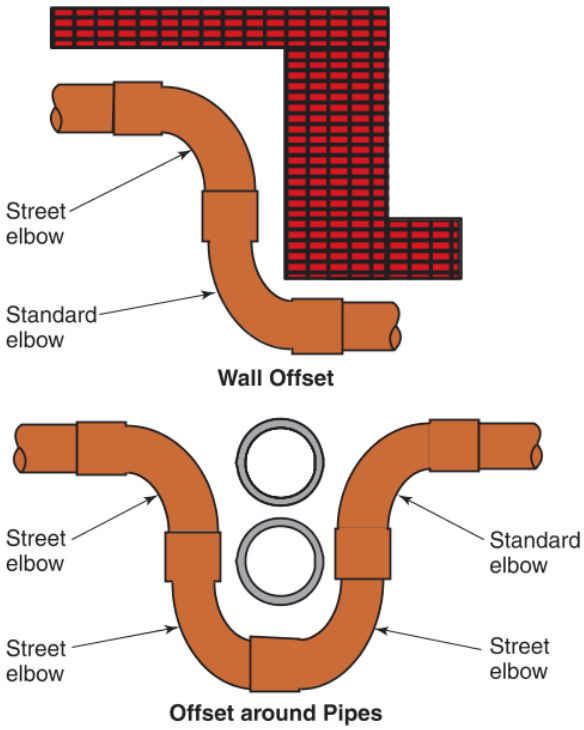

Goodheart-Willcox Publisher

Figure 8-47. Two examples where street fittings are used to save time and labor.

A male-threaded pipe should be turned into the female fitting for a distance of at least five threads for a good seal. The threads are made self-sealing by the pressing together of the sharp V-threads as they are assembled. Various commercial compounds are available to help seal these threads. When brushed on pipe threads before assembly, the compound will make a strong, leakproof joint, **Figure 8-48**.

8.6.2 Cutting and Joining Plastic Pipe

A fine-tooth saw is best for cutting plastic pipe. A miter box will ensure square end cuts. Pipe cutters designed specifically for plastic pipe may also be used, **Figure 8-49**. Pipe ends must be cut square with burrs removed and ends beveled. Use a knife, coarse file, or deburring tool to remove burrs.

Although Schedule 40 and Schedule 80 plastic pipe have the same outside diameter, Schedule 80 has a thicker wall so it may be threaded like steel pipe or solvent-welded. Schedule 40 plastic pipe walls are too thin to be threaded and must be solvent-welded. ***Solvent welding*** is the joining of two components of the same material using a solvent that temporarily dissolves the surface polymers at room temperature, allowing the polymer chains to become entangled. Although solvent welding (cementing) is a quick and simple operation, care must be taken to provide pressure-tight joints.

Solvent cement is usually sold in one-pint metal containers with an application dauber attached to the underside of the lid. Solvent cement containers must remain

Copyright Goodheart-Willcox Co., Inc.

LA-CO Industries Inc.

Figure 8-48. Two types of pipe thread sealant.

closed when not in use to avoid evaporation. Thinner should not be used with solvents. Specific solvent cement is required for each type of plastic pipe. The solvent used must match the type of pipe used. A primer must be used prior to solvent welding in order to clean and soften the bonding surfaces of the pipe and fittings.

ABS cement is used with all sizes of ABS pipe and fittings. CPVC cement is used with all sizes of Schedule 40 and Schedule 80 CPVC pipe and fittings. Light-duty PVC cement is used with Schedule 40 PVC pipe and fittings 6″ or less in diameter. Heavy-duty PVC cement is used with Schedule 80 PVC pipe and fittings 6″ or less in diameter. Extra heavy-duty PVC cement is used with all PVC pipe and fittings 6″ or greater in diameter. When joining two types of plastic pipe, check local codes. Such unions are usually not allowed unless a mechanical joint or special adapter is used.

Ritchie Engineering Co., Inc. – YELLOW JACKET Products Division

Figure 8-49. Cutters for smaller diameter plastic pipe often resemble shears.

Caution

Flammability of Cements and Primers

Solvent cements and primers are flammable and may emit dangerous vapors. Fumes may cause eye and skin irritation. Keep these products away from heat, sparks, and open flames. Use in a well-ventilated area. Avoid contact with eyes and skin. Avoid prolonged exposure to vapors.

Solvent Welding Plastic Pipe

1. Use a clean cloth to wipe loose dirt or moisture from both the inside and outside surfaces of the pipe end.
2. Using a dauber or a natural bristle brush, apply primer to the pipe end for a length slightly more than the depth of the fitting's socket. Also apply primer to the inside socket of the fitting where the plastic pipe will be placed.
3. Apply a generous coat of cement to the outside end surface of the plastic pipe for a distance slightly more than the depth of the fitting's socket. Apply a layer of cement around the inside socket of the fitting. Do not apply an excess of cement, as it may restrict flow through the system.
4. Insert the pipe into the socket to the full socket depth of the fitting. While inserting, rotate the pipe or fitting one-quarter turn to distribute the cement.
5. Hold the joint firmly for 20 to 30 seconds. Allow at least two minutes for drying time.

Pro Tip

Solvent-Welding Dos and Don'ts

Do not solvent-weld in the rain, in temperatures below 40°F (4°C), or in direct sunlight at temperatures above 90°F (32°C). Fittings for plastic pipe must match the pipe—ABS fittings with ABS pipe, PVC fittings with PVC pipe.

Copyright Goodheart-Willcox Co., Inc.

Chapter Review

Summary

- Most tubing used in HVACR is made of copper and is known as air conditioning and refrigeration (ACR) tubing. Copper ACR tubing is specified by its actual outside diameter.
- Stainless steel tubing is often used in food processing, manufacturing, and specialized cooling coils. Aluminum tubing is commonly used to form evaporators in HVACR systems.
- Copper water tubing and plastic pipe are used for water lines, drains, and other non-refrigerant applications. Three types of plastic pipe used in HVACR work are ABS, PVC, and CPVC.
- Steel pipe is used to circulate refrigerant in ammonia refrigeration systems; however it is more commonly used for gas line and water lines. Steel pipe is black or galvanized. Black steel pipe is primarily used for gas applications.
- Tubing is usually cut with a tubing cutter or a hacksaw. Cutting should always be done at a 90° angle. Tubing should be filed and reamed after cutting to square the ends and remove any burrs.
- Bending tubing to have a large radius helps to avoid problems that could lead to reduced flow and pressure. Bending springs of various sizes can be placed either inside or outside lengths of tubing to make bending easier.
- Flared connections involve flaring (enlarging) the end of a piece of tubing to allow it to form a strong seal with a fitting. The flared tubing and fitting are held together by the compression of a tightened flare nut.
- Soldering is used on water pipes and drains. Brazing is used on refrigerant tubing. The difference between soldering and brazing is the temperature required to melt the filler alloy and the type of filler metal and flux used.
- Swaging is a method of preparing two pieces of soft copper tubing for joining by soldering or brazing. Swaging does not use fittings for the joint.
- When two dissimilar metals must be joined, a special tube coupling is usually used. This is done using a mechanical or compression fitting.
- For HVACR applications, steel pipe is usually joined using pipe threads and threaded fittings. The threads on the pipe are tapered to seal the pipe and fitting as they are tightened.
- Plastic pipe and pipe fittings are often joined by solvent welding. Each of the different types of plastic pipe require its own type of solvent and primer.

Review Questions

Answer the following questions using information in this chapter.

1. Copper tubing manufactured specifically for circulating refrigerant in refrigeration systems is called _____ tubing.
   A. ABS
   B. CPVC
   C. OD
   D. ACR
2. What is the outside diameter of 1/4″ ACR tubing?
   A. 1/4″
   B. 5/8″
   C. 7/16″
   D. 1/2″
3. Soft copper tubing that has been hardened by repeated bending or hammering is referred to as _____.
   A. Type L
   B. hard-drawn
   C. work hardened
   D. annealed
4. Steel pipe is not generally used to circulate refrigerant, *except* in systems that use _____ as the refrigerant.
   A. ammonia
   B. carbon dioxide
   C. nitrogen
   D. propane
5. A proper connection of an ACR tube to another ACR tube of the same size that has been swaged involves _____.
   A. brazing
   B. flaring
   C. soldering
   D. a threaded street fitting
6. Which of the following is *not* a type of plastic pipe?
   A. ABS
   B. PVC
   C. JIC
   D. CPVC

Copyright Goodheart-Willcox Co., Inc.

7. When cutting copper tubing with a hacksaw, what practice should be followed?
   A. Cut squarely at 90°
   B. Do not let filings get into the tubing
   C. Close off ends of unused tubing
   D. All of the above.
8. Which is the recommended method of removing an external bending spring from tubing after the tubing has been bent?
   A. Anneal the tubing
   B. Grease the spring
   C. Twist the spring
   D. None of the above.
9. Most flares on ACR tubing are made at an angle of _____.
   A. 30°
   B. 45°
   C. 60°
   D. 75°
10. Which of the following is the first step when flaring tubing?
   A. Insert the tubing into the flaring block
   B. Place the flare nut on the tubing
   C. Mount the yoke on the flaring block
   D. Turn the flaring cone into the tube end
11. The difference between double flares and single flares is that double flares _____.
   A. are used on steel
   B. are made at 37°
   C. have a double thickness of metal
   D. are weaker than single flares
12. Flared 1/4″ ACR tubing uses a(n) _____ flare nut.
   A. 1/4″
   B. 1/8″
   C. 7/16″
   D. 3/16″
13. An important reason to prevent exposing some refrigerants to extreme heat is that they produce an extremely dangerous by-product called _____.
   A. oxyacetylene
   B. solder
   C. acetylene gas
   D. phosgene gas
14. Which type of torch flame is recommended for brazing, produces relatively little noise, and does not generate smoke?
   A. Carburizing
   B. Neutral
   C. Oxidizing
   D. All of the above.
15. An important phenomenon in soldering and brazing is the movement of a liquid substance between two solid substances due to the adhesive forces of the solids, which is called _____.
   A. annealing
   B. capillary action
   C. fluxing
   D. purging
16. Metal that is being soldered must be _____ when soldering.
   A. about 1150°F
   B. hot enough to become annealed
   C. hot enough to fully melt the solder
   D. hot enough to melt the metals being joined
17. Before soldering tubing, it is important to _____ the metal parts.
   A. add primer to
   B. clean with soapy water
   C. first clean and then add flux to
   D. use a damp rag to moisten
18. The major temperature that separates soldering and brazing is _____.
   A. 250°F
   B. 840°F
   C. 2500°F
   D. 6000°F
19. Never use _____ when purging tubing to remove unwanted dirt and moisture from a refrigeration system.
   A. oxygen
   B. carbon dioxide
   C. nitrogen
   D. None of the above.
20. With the flame kept on the metal but away from the brazing filler material, what ultimately indicates that the correct brazing temperature has been reached?
   A. The flux begins to bubble.
   B. The flux turns puffy and white.
   C. When the filler metal is applied to the seam, it does *not* melt.
   D. When the filler metal is applied to the seam, it melts and is drawn into the seam.
21. Why does a joint need to be cleaned *after* brazing?
   A. It does *not* need to be cleaned
   B. To shock cool the joint
   C. To remove brazing alloy
   D. To remove flux, which may corrode tubing

Copyright Goodheart-Willcox Co., Inc.

22. The length of the overlap of two pieces of tubing joined by swaging should equal the _____ of the tubing.
    A. outside diameter
    B. inside diameter
    C. nominal size
    D. None of the above.
23. Pipe schedule refers to a pipe's _____.
    A. length
    B. inside diameter
    C. outside diameter
    D. wall thickness
24. A street fitting is an angled pipe or tubing fitting that has _____.
    A. one male end and one female end
    B. two female ends
    C. two male ends
    D. four connections of the same type
25. What type of solvent cement can be used with Schedule 40 PVC pipe and fittings under 6″?
    A. ABS cement
    B. Light-duty CPVC cement
    C. Light-duty PVC cement
    D. All of the above.

Copyright Goodheart-Willcox Co., Inc.

CHAPTER 9 Introduction to Refrigerants

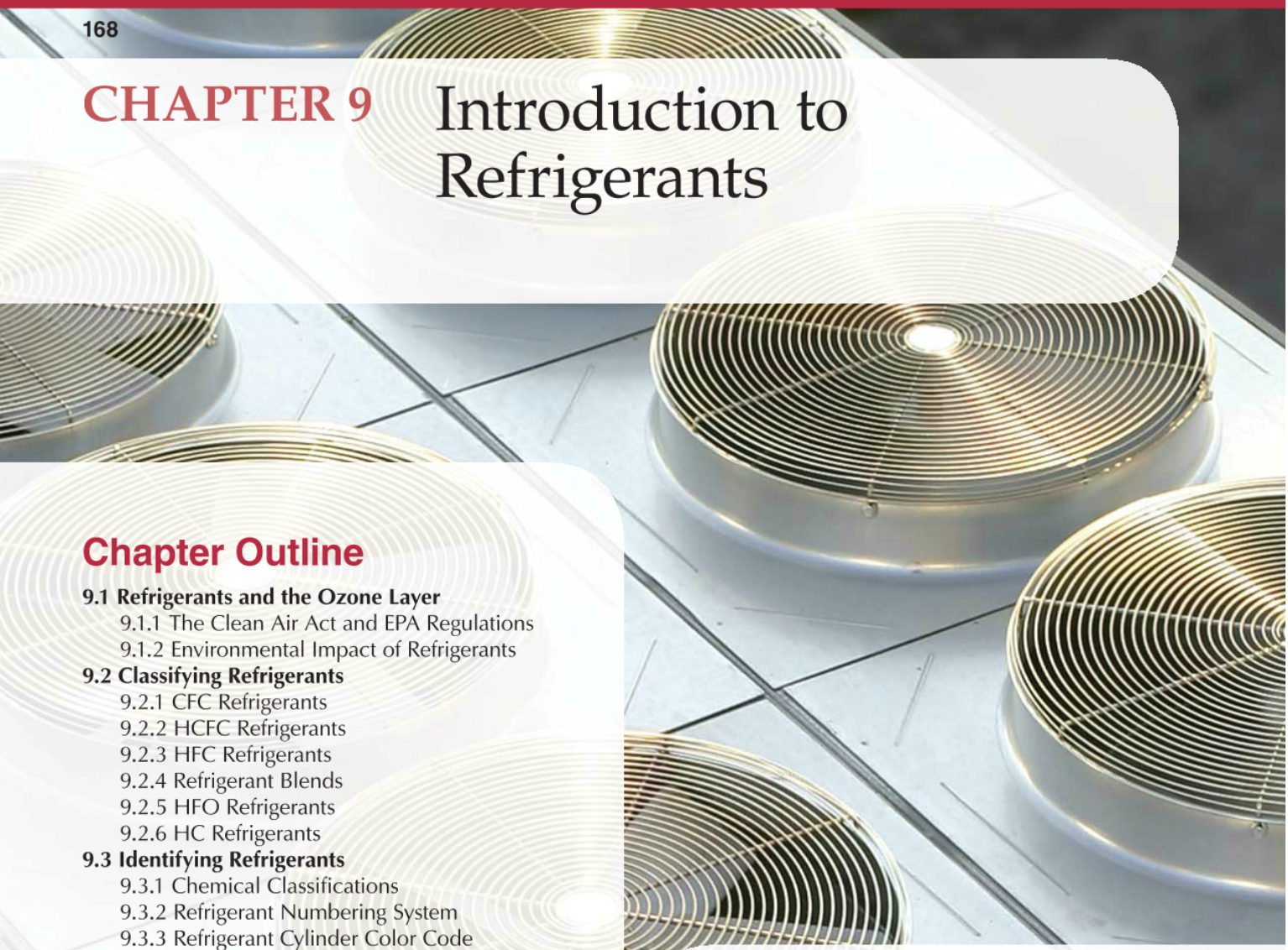

Chapter Outline

9.1 Refrigerants and the Ozone Layer
- 9.1.1 The Clean Air Act and EPA Regulations
- 9.1.2 Environmental Impact of Refrigerants

9.2 Classifying Refrigerants
- 9.2.1 CFC Refrigerants
- 9.2.2 HCFC Refrigerants
- 9.2.3 HFC Refrigerants
- 9.2.4 Refrigerant Blends
- 9.2.5 HFO Refrigerants
- 9.2.6 HC Refrigerants

9.3 Identifying Refrigerants
- 9.3.1 Chemical Classifications
- 9.3.2 Refrigerant Numbering System
- 9.3.3 Refrigerant Cylinder Color Code

9.4 Refrigerant Properties
- 9.4.1 Refrigerant Toxicity and Flammability Properties
- 9.4.2 Pressure-Temperature Curves
- 9.4.3 Pressure-Temperature (P/T) Charts
- 9.4.4 Pressure-Enthalpy Tables
- 9.4.5 Pressure-Enthalpy Diagrams

9.5 Refrigerant Applications
- 9.5.1 Phaseout of Refrigerants
- 9.5.2 Criteria for New Refrigerants
- 9.5.3 Commonly Used New Refrigerants

9.6 Inorganic Refrigerants
- 9.6.1 R-717 Ammonia
- 9.6.2 Cryogenic Fluids
- 9.6.3 Expendable Refrigerants

9.7 Refrigeration Lubricants
- 9.7.1 Properties of Refrigeration Lubricants
- 9.7.2 Types of Refrigeration Lubricant
- 9.7.3 Handling Refrigeration Lubricants
- 9.7.4 Adding Lubricant to a System
- 9.7.5 Contaminated Lubricant

Learning Objectives

Information in this chapter will enable you to:

- Recognize the effect of halogenated refrigerants on the ozone layer.
- Summarize Environmental Protection Agency regulations governing refrigerants.
- Differentiate between CFC, HCFC, HFC, and blended refrigerants.
- Identify refrigerants according to their series number and cylinder color code.
- Interpret pressure-temperature curves, pressure-enthalpy tables, and pressure-enthalpy diagrams.
- Summarize the properties and common applications of different refrigerants.
- Identify which types of refrigerants are compatible with which lubricants.

Technical Terms

alkylbenzene (AB) lubricant
azeotropes
bubble point
chlorofluorocarbons (CFCs)
Class A refrigerant
Class B refrigerant
Clean Air Act
coefficient of performance (COP)
dew point
dielectric strength
Environmental Protection Agency (EPA)
expendable refrigerant
expendable refrigeration system
flammability
flash point
floc point
fractionation
freezant
fully halogenated
global warming potential (GWP)
hydrocarbons (HCs)
hydrochlorofluorocarbons (HCFCs)
hydrofluorocarbons (HFCs)
hydrofluoro-olefins (HFOs)
mineral oil (MO)
Montreal Protocol
near-azeotropes
ozone depletion potential (ODP)
polyalkylene glycol (PAG) lubricant
polyol ester (POE) lubricant
pour point
pressure-enthalpy diagram
pressure-enthalpy table
pressure-temperature (P/T) chart
pressure-temperature curve
refrigerant blends
refrigeration lubricant
SNAP (Significant New Alternatives Policy)
temperature glide
thermal stability
toxicity
viscosity
wax separation
zeotropes

Review of Key Concepts

Reviewing these concepts from earlier chapters will help you understand new concepts presented in this chapter:

- A refrigerant changes phase from liquid to vapor to absorb heat inside a conditioned space and changes from vapor to liquid to release heat outside of a conditioned space. (Chapter 6)
- For most substances, heat energy added or removed while a substance is at its boiling point is used to change its state. This heat energy does not change the substance's temperature. (Chapter 4)
- The higher the pressure applied on a liquid, the higher the temperature needed to bring about a state change, and vice versa. Higher pressure requires a higher temperature to begin boiling, and vice versa. (Chapter 5)
- In a saturated vapor condition, all of a substance's molecules have been vaporized that can be vaporized under the existing conditions of pressure and temperature. Any drop of temperature or rise of pressure will cause some of the vapor to condense. (Chapter 5)
- Most refrigeration systems use oil to lubricate the compressor and other moving parts. (Chapter 6)

Introduction

There have been many attempts to find a refrigerant that is effective, safe, cost efficient, and environmentally harmless. In the late 1800s, inventors used water and ammonia as refrigerants in absorption systems. In the early 1900s, the first electrically powered mechanical refrigeration systems were developed. These used refrigerants that were toxic, such as sulfur dioxide and ammonia. Servicing leaks from these systems was extremely dangerous for a service technician.

The search for a safe, nontoxic refrigerant produced chlorofluorocarbons (CFCs). In 1930, the DuPont Company produced Refrigerant Twelve. They called it R-12 and sold it under the trade name "Freon-12." Freon-12 was an excellent refrigerant. It was nontoxic and had very good pressure and temperature attributes. Once it became mass produced, it was also relatively inexpensive. From the 1930s to the 1990s, variations of CFC refrigerants were developed, and the service technician worked with three basic refrigerants: R-12, R-22, and R-502, **Figure 9-1**. The discovery of a hole in the ozone layer, however, has dramatically increased the number of refrigerants used and the complexity of the service technician's job.

Video

- Heat, Pressure, and Saturation

Arkema, Inc.

Figure 9-1. Three important refrigerants in the history of HVACR: R-12, R-22, and R-502.

9.1 Refrigerants and the Ozone Layer

In the 1970s, satellites were placed in orbit to examine the climate of the earth. One thing scientists studied with these satellites was earth's atmospheric protective layer (composed primarily of ozone, O_3). One surprising discovery was that the protective layer of ozone had a hole in it.

The ozone layer acts as a filter for the sun's ultraviolet rays. This protects human, plant, and animal life from the damaging effects of these rays, **Figure 9-2**. The ozone layer also assists in maintaining stable temperatures. Scientists believe that depletion of the ozone layer can have harmful effects, such as climate change and an increase in skin cancer and eye damage.

Scientists have determined that ozone layer depletion is a result of numerous man-made gases that escape and rise up into the atmosphere. One group of these gases is chlorofluorocarbons (CFCs). Destruction of the ozone layer by the release of CFCs into the atmosphere is of great concern. In addition, hydrochlorofluorocarbons (HCFCs) and hydrofluorocarbons (HFCs), which are also used as refrigerants, have been shown to contribute to climate change as well.

In an attempt to stop ozone depletion, a document was signed that banned the production of CFCs in all large, developed countries. This document, which went into effect on January 1, 1989, was known as the ***Montreal Protocol***. The Montreal Protocol required the United States and other developed countries to stop producing CFC refrigerants by January 1, 1996. The banning of CFCs resulted in the largest development program to invent new refrigerants since the early days of refrigeration.

9.1.1 The Clean Air Act and EPA Regulations

The ***Environmental Protection Agency (EPA)*** is a US governmental agency charged with enforcing the regulations for working with refrigerants. The ***Clean Air Act*** is a federal law that includes guidelines, restrictions, and penalties for releasing refrigerants into the atmosphere. Fines are assessed, up to $37,500 per day, for failure to comply with the Clean Air Act. The following is a partial list of violations subject to legal action:

- Venting of CFC, HCFC, HFC, or HFO refrigerants into the atmosphere.
- Failure to recover refrigerant to required evacuation levels before opening equipment for maintenance.
- Falsifying records or failure to keep records.

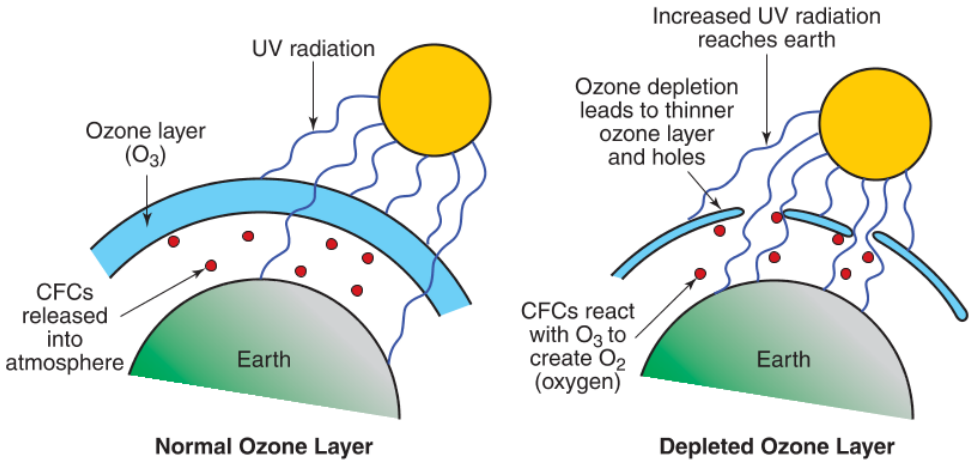

Goodheart-Willcox Publisher

Figure 9-2. The depletion of the ozone layer allows increased ultraviolet radiation to reach the earth. This increased radiation has negative effects on human health and the earth's climate.

Copyright Goodheart-Willcox Co., Inc.

- Performing refrigeration work without having technician certification according to Section 608 of the Clean Air Act.
- Disposing of refrigeration and air conditioning equipment or cylinders without fully recovering or reclaiming the refrigerant.
- Using recovery equipment that is not EPA approved.

The implementation of these laws has resulted in a significant change in refrigerant handling by HVACR technicians. It is necessary to be certified and trained in how to perform refrigerant recovery, recycling, and reclamation. These regulations are intended to prevent *significant purposeful* releases of refrigerants into the atmosphere. However, there are exceptions that allow service technicians to reasonably do their job.

9.1.2 Environmental Impact of Refrigerants

The impact of a refrigerant on the environment is measured in two ways by the Environmental Protection Agency:

- Ozone depletion potential (ODP). Ozone depletion potential is the measurement of the ability of a refrigerant to destroy the ozone layer. The base unit of measurement is the refrigerant R-11, which has an ODP of 1.0. The more harmful the refrigerant is to the ozone layer, the higher its ODP.
- Global warming potential (GWP). Global warming potential is a measure of the ability of a gas to contribute to global warming over time. The baseline gas is carbon dioxide (CO_2), which has a GWP of 1.0. GWP is commonly measured over a 100-year time period.

Figure 9-3 shows the ODP and GWP of different types of refrigerants. The refrigerant R-12, which is a CFC, has an ODP of 1.0 and a GWP of 10,900!

Ozone Depletion Potential (ODP)

To provide a clearer perspective on the amount of ozone depletion caused by certain substances, a numeric value has been assigned to each refrigerant and is referred to as its ***ozone depletion potential (ODP)***. The ODP scale has a minimum value of zero and compares the destructive potential of different chemicals to the destructive potential of R-11, which is 1 on the ODP scale. A refrigerant that is half as destructive as R-11 would have an ODP value of 0.5. A chemical that is five times as destructive as R-11 would have an ODP value of 5. The higher a refrigerant's ODP is, the greater the risk for ozone layer depletion.

As illustrated by the chart in **Figure 9-3**, the different types of refrigerants vary in ODP levels. CFC refrigerants receive a high ODP rating. HCFC refrigerants possess a low ODP. HFCs, HCs, and inorganic refrigerants have no ODP.

Environmental Properties of Refrigerants

ASHRAE Refrigerant #	Type	ODP (Ozone Depletion Potential)	GWP (Global Warming Potential)
R-11	CFC	1	4,750
R-12	CFC	1	10,900
R-22	HCFC	0.05	1,810
R-123	HCFC	0.02	77
R-134a	HFC	0	1,430
R-290	HC	0	3.3
R-404A	HFC	0	3,922
R-407C	HFC	0	1,774
R-410A	HFC	0	2,088
R-507	HFC	0	3,985
R-600a	HC	0	3
R-717	Inorganic	0	1
R-744	Inorganic	0	0
R-1234yf	HFO	0	4
R-1234ze	HFO	0	3

Goodheart-Willcox Publisher

Figure 9-3. Table showing the global warming potential and ozone depletion potential for different types of refrigerants.

Global Warming Potential (GWP)

As mentioned previously, the ozone layer helps to maintain stable temperatures on the earth. Scientists have concluded that some refrigerants contribute to global warming. Global warming is caused by long-wave radiation from the sun that becomes trapped within the earth's atmosphere. This trapped radiation slowly heats the earth's surface.

Each refrigerant is assigned a number that expresses its ***global warming potential (GWP)***. The GWP rating is based on the ratio of a substance's warming effect compared to the warming effect of carbon dioxide. The higher the GWP is, the greater the risk of environmental damage.

9.2 Classifying Refrigerants

Refrigerants used today are divided into several different chemical categories:

- Chlorofluorocarbons (CFCs).
- Hydrochlorofluorocarbons (HCFCs).

Copyright Goodheart-Willcox Co., Inc.

- Hydrofluorocarbons (HFCs).
- Refrigerant blends (azeotropic and zeotropic).
- Hydrofluoro-olefin (HFOs).
- Hydrocarbons (HCs).

9.2.1 CFC Refrigerants

Chlorofluorocarbons (CFCs) were the first halogen-based refrigerants developed over eighty years ago. Besides being used as refrigerants, CFCs have also been used as blowing agents for the manufacture of insulation and packaging. CFCs are composed of chlorine, fluorine, and carbon. Two popular CFC refrigerants include R-11 and R-12.

When CFCs are vented into the atmosphere, their chlorine atoms attach to the oxygen atoms in ozone molecules and break the ozone molecules apart. Acting as a catalyst, the chlorine makes three normal oxygen molecules from two ozone molecules. Each chlorine atom can break apart as many as 100,000 ozone molecules before it is neutralized through other chemical reactions. This results in the reduction of ozone and an increase in ultraviolet radiation reaching Earth.

CFCs have high ODPs and are one of the major causes of ozone depletion. By international agreement, they have not been manufactured in developed countries since the end of 1995. However, CFCs may still be found in some air conditioning and refrigeration equipment produced before 1995.

9.2.2 HCFC Refrigerants

Hydrochlorofluorocarbons (HCFCs) are refrigerants whose molecules are composed of hydrogen, chlorine, fluorine, and carbon. HCFC molecules include halogens combined with either methane (CH_4) or ethane (C_2H_6). Examples of HCFC refrigerants are R-22 and R-123, **Figure 9-4**.

Studies have indicated that HCFCs and certain refrigerant blends have less impact on the ozone layer than ***fully halogenated*** CFCs. CFCs are considered to be fully halogenated because all the hydrogen atoms in the original methane or ethane molecule have been replaced by halogens, such as chlorine and fluorine.

In contrast, HCFCs are considered to be partially halogenated because not all the hydrogen atoms have been replaced by chlorine and fluorine, **Figure 9-5**. As a result, HCFCs tend to break down in the lower atmosphere and cause less ozone depletion than CFCs. Although they have lower ODP levels than CFCs, HCFCs still linger in the atmosphere for a long time and have a high GWP. The EPA requires the complete phaseout of HCFCs by the year 2030.

Arkema, Inc.

Figure 9-4. R-22 and R-123 are two common HCFCs.

9.2.3 HFC Refrigerants

Hydrofluorocarbons (HFCs) are refrigerants that contain hydrogen, fluorine, and carbon. They differ from CFCs and HCFCs in that they contain no chlorine atoms. HFCs are considered to have zero ODP. Like HCFCs, HFCs are partially halogenated, but they have a lower ODP than HCFCs because they do *not* contain chlorine atoms. Refer to **Figure 9-5**. This makes HFC refrigerants well suited to replace ozone depleting refrigerants. Examples of HFC refrigerants are R-134a, R-152a, and R-404A, **Figure 9-6**.

Although HFCs have an ODP of zero, some HFCs still have a high GWP and are beginning to be replaced by a variety of lower GWP alternatives, such as carbon dioxide, hydrocarbons, and hydrofluoro-olefins (HFOs). HFOs are similar to HFCs because they contain hydrogen, fluorine, and carbon, but they have a slightly different chemical structure.

9.2.4 Refrigerant Blends

Refrigerant blends are mixtures of two or more established refrigerants. Based on their thermodynamic properties, they are split into the following groups: azeotropes, zeotropes, and near-azeotropes.

Because they are made of other refrigerants, refrigerant blends fall into the same chemical classifications as the individual refrigerants of which they are composed. If a blend has a CFC, it is classified as a CFC. If a blend contains an HFC and an HCFC but no CFC, then it is an HCFC. If a blend contains only HFCs, then it is an HFC. For example, R-500 is composed of R-12 and R-152a. R-152a is an HFC, but because R-12 is a CFC, R-500 is considered a CFC.

Some refrigerants commonly mixed into these blends include R-12, R-22, and R-134a. As equipment is

Copyright Goodheart-Willcox Co., Inc.

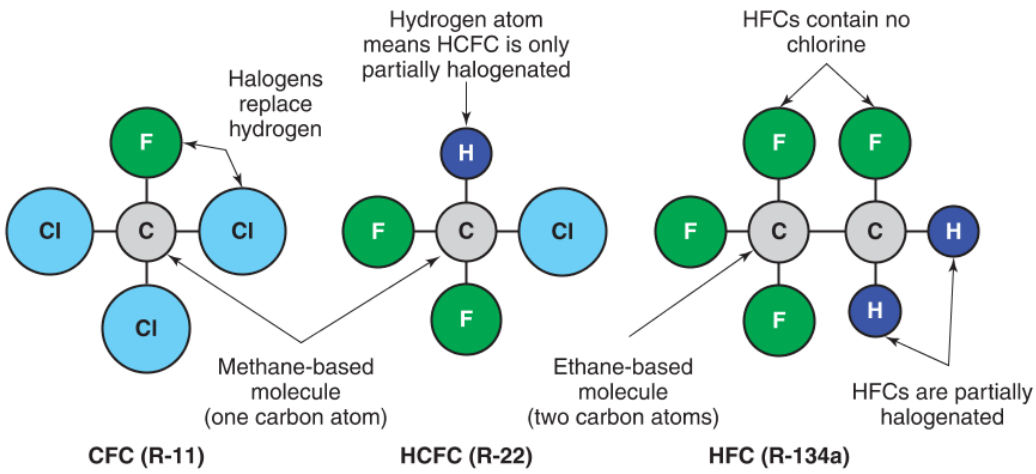

Goodheart-Willcox Publisher

Figure 9-5. CFCs are fully halogenated refrigerants, whereas HCFCs and HFCs are not because they contain hydrogen.

designed for newer, more ecologically friendly refrigerants, refrigerant blends that contain mixtures of phased-out refrigerants, such as R-12 and R-22, are considered to be interim refrigerants. This is due to either their high GWP or high ODP.

Azeotropic Mixtures

Azeotropes are refrigerant blends that respond to changes in pressure and temperature like a single refrigerant, having fixed boiling and condensing points. An azeotrope maintains consistent properties during all operational conditions. At atmospheric pressure, the individual refrigerants will not separate as the blend evaporates or condenses.

Azeotropes can be identified by their ASHRAE classification number series of 500, **Figure 9-7**. R-500 and R-502 are examples of azeotropes. R-500 consists of R-12 and R-152a, and R-502 consists of R-22 and R-115.

Worthington Industries

Figure 9-6. R-134a and R-404A are two common HFCs.

Arkema, Inc.

Figure 9-7. R-500 and R-507A are two examples of azeotropes.

Because most azeotropic blends contain a phased-out refrigerant, their use may decrease with time, unless new azeotropic mixtures are developed.

Zeotropic Blends

Zeotropes are refrigerant blends in which each individual refrigerant that makes up the blend responds differently to conditions based on its individual characteristics. Therefore, a zeotropic blend operates under a range of boiling and condensing points that correspond to the range of its individual refrigerants and the percentage of the blend that each refrigerant makes up. Other refrigerants, like R-12 and R-22, boil and condense at the same pressure-temperature point. But zeotropes boil and condense at different temperatures (for a given pressure). The boiling (bubble) and condensing (dew) points of zeotropes are different temperatures due to the phenomenon called fractionation.

Copyright Goodheart-Willcox Co., Inc.

During a refrigeration cycle, a single zeotropic refrigerant can separate into its individual component refrigerants. This separating of a zeotropic blend's individual refrigerants during phase change is known as ***fractionation***. Fractionation can be thought of as the refrigerant splitting up or "fracturing" into its base components. This occurs because the different refrigerants in a zeotropic blend have different boiling points. The refrigerant with the lowest boiling point boils first. The temperature at which a liquid zeotrope first begins to boil is called its ***bubble point***.

For example, R-401A is a zeotropic refrigerant blend composed of R-22, R-152a, and R-124. At atmospheric pressure, R-22 has a boiling point of –41°F (–40.5°C), R-152a has a boiling point of –13°F (–25°C), and R-124 has a boiling point of 10.5°F (–12°C). As the refrigerant blend enters the evaporator, R-22 vaporizes first, followed by R-152a. As a result, the refrigerant vapor early in the evaporation process is composed mainly of R-22 and R-152a, while the liquid refrigerant is composed primarily of R-124 and some R-152a. As the evaporation process continues, the ratio of refrigerants in the vapor gradually returns to what it was when the liquid refrigerant entered the evaporator. The component refrigerants undergo a similar separation when the refrigerant blend condenses. The temperature at which a vapor zeotrope first begins to condense is called its ***dew point***.

The impact of fractionation is that a zeotropic refrigerant blend can have different temperatures at any given pressure, depending on whether it is a liquid or vapor. This temperature difference is called temperature glide. ***Temperature glide*** is the temperature difference between the vapor and liquid state during evaporation or condensation at a constant pressure.

Temperature glide is a unique characteristic of zeotropic blends. Normally a substance evaporates or condenses while maintaining a constant temperature. When water reaches 212°F (100°C), it does not immediately become vapor. Additional heat, called latent heat, must be absorbed to provide the energy for a phase change from liquid to vapor, but the additional heat does *not* raise the temperature of the water as it changes. Zeotropes can change phase and temperature at the same time, and each zeotropic refrigerant blend has its own temperature glide. The common range for temperature glide is 0.3°F to 10°F (0.2°C to 6°C).

Remember that temperature glide is a result of the different boiling and condensing temperatures of a zeotrope's individual components for a given pressure. The temperature at which a liquid zeotrope first begins to boil is its bubble point. The temperature at which a vapor zeotrope first begins to condense is its dew point.

As shown by the refrigerants in the examples presented, a zeotrope can be identified by its number. Zeotropes are grouped by ASHRAE classification series 400, **Figure 9-8**.

Caution

Mixing Refrigerant Blends

Zeotropic and azeotropic refrigerants are patented refrigerants. The manufacturing process is complicated. Service technicians should *never* attempt to make their own mixtures.

Pro Tip

Near-Azeotropes

Near-azeotropes react similarly to zeotropes but respond over a smaller range of boiling and condensing points. Near-azeotropes are technically zeotropes, but allowing them their own category helps to differentiate them more precisely.

9.2.5 HFO Refrigerants

A newer refrigerant category is ***hydrofluoro-olefins (HFOs)***. These are composed of hydrogen, fluorine, and carbon, but they have at least one double bond between the carbon atoms. While HFOs are technically a group of HFCs, they are made from olefins, rather than alkanes (paraffins). HFOs have zero ODP and very low GWP values. Some are beginning to be used in automotive air conditioning systems. HFOs are miscible in POE lubricants and *not* soluble in mineral oils (MOs) or alkylbenzene (AB) lubricants. The two most popular HFOs are HFO-1234yf and HFO-1234ze. They

Arkema, Inc.

Figure 9-8. R-407C and R-409A are two examples of zeotropes.

Copyright Goodheart-Willcox Co., Inc.

have low toxicity but are slightly flammable with an ASHRAE safety classification of A2L. The "L" means lower flammability.

Safety Note

Mildly Flammable

HFOs are mildly flammable. However, extensive studies are helping to develop standards for their safe usage.

HFO-1234yf is being used as a low-GWP replacement for R-134a in mobile air conditioning (MAC) systems in automotive applications in Europe and the United States. It has a much lower GWP than R-134a, but still has a higher initial cost than R-134a.

HFO-1234ze is designed to replace R-410A in residential and light commercial air conditioning and heat pump applications. It can also be used in air-cooled and water-cooled chillers in supermarkets and commercial buildings. Other applications include vending machines, refrigerators, beverage dispensers, and CO_2 cascade systems in commercial refrigeration. It is energy efficient, cost-effective, and requires minimal retrofit work for existing systems. A retrofit may require a lubricant change for R-32 systems. High discharge temperatures may affect system performance in hot climates.

9.2.6 HC Refrigerants

Hydrocarbons (HCs) are organic substances that contain carbon and hydrogen. These substances are the components in petroleum and natural gas. They are often known for their use as fuel and in the production of plastics, solvents, and industrial chemicals. Hydrocarbons can also be used as refrigerants. Pure hydrocarbons have 0 ODP and a low GWP compared to CFCs, HCFCs, and HFCs. HCs also have better energy efficiency than HFCs.

Safety Note

Hydrocarbon Flammability

HCs have an ASHRAE safety classification of A3, meaning they have low toxicity but high flammability. Because of this, only some HCs have been approved by ***SNAP (Significant New Alternatives Policy)***. This is the EPA's program that evaluates and regulates substitutes for high ODP refrigerants. It helps to progress the phase out of older refrigerants and meet the ozone protection provisions of the Clean Air Act (CAA).

SNAP only allows HCs in new equipment, not in retrofits yet. HC use in new equipment is under limited conditions, such as small refrigerant charges. Most of this equipment includes stand-alone retail refrigerators, freezer equipment, domestic refrigerators, domestic freezers, and refrigerator-freezers. The following HCs have been approved by SNAP:

- R-600a (isobutane).
- R-290 (propane).
- R-441A (HC blend).

9.3 Identifying Refrigerants

Refrigerants are identified by a standardized numbering system developed by the American Society of Heating, Refrigerating, and Air-Conditioning Engineers (ASHRAE). Refrigerants are assigned a unique number that follows the letter *R*, which stands for refrigerant. Become familiar with both refrigerant numbers and names. Refrigerant numbers are not just randomly assigned. The first digit indicates the refrigerant series to which a particular refrigerant belongs. The numbers that follow have a different significance depending on the refrigerant's classification.

9.3.1 Chemical Classifications

Refrigerants are first categorized by their molecular structure. **Figure 9-9** shows the various classifications of refrigerants. *Methane-*, *ethane-*, and *propane-based* refrigerants contain carbon as their main component, making them organic compounds. *Cyclic organic* refrigerants are organic refrigerants that have double bonds between atoms. *Miscellaneous organic* refrigerants are carbon-based refrigerants that do not fall under any of the previous categories. Refrigerants in this category include butane and pentane. *Inorganic* refrigerants are refrigerants that typically do *not* contain carbon, such

Chemical Classifications of Refrigerants

Series	Refrigerant Classification
000	Methane based
100	Ethane based
200	Propane based
300	Cyclic organic
400	Refrigerant blends—zeotropes
500	Refrigerants blends—azeotropes
600	Miscellaneous organic
700	Inorganic
1000	Unsaturated organic

Goodheart-Willcox Publisher

Figure 9-9. Refrigerants are categorized in the ASHRAE numbering system according to their chemical classification.

Copyright Goodheart-Willcox Co., Inc.

as hydrogen, oxygen, water, and ammonia. *Unsaturated organic* compounds are used in the manufacture of plastics, such as vinyl chloride.

Pro Tip

Carbon Dioxide (R-744)

Carbon dioxide (CO_2) is a simple oxide of carbon and is not classified as an organic compound. For this reason, it is categorized as an inorganic refrigerant.

9.3.2 Refrigerant Numbering System

The refrigerant numbering system includes three numbers in a refrigerant designation. The numbers are identified from right to left. The third number from the right indicates the series or classification of the refrigerant, refer to **Figure 9-9**.

For refrigerants included in the 000, 100, 200, and 300 series, the third number from the right denotes the series of the refrigerant and also the number of carbon atoms in one molecule of the refrigerant minus one. The second number from the right equals the number of hydrogen atoms in the refrigerant plus one. The first number on the right represents how many fluorine atoms are in the refrigerant.

R-134a is an HFC refrigerant. The chemical name for R-134a is 1,1,1,2-tetrafluoroethane, and its chemical formula is CH_2FCF_3. The third number from the right in R-134a is one. Therefore, it is classified as an ethane-based refrigerant. R-134a has two carbon atoms, since the third number from the right also represents the number of carbon atoms minus one. The second number from the right is the number of hydrogen atoms in the refrigerant plus one. Therefore, R-134a has two hydrogen atoms. The first number on the right is the number of fluorine atoms. R-134a has four fluorine atoms. **Figure 9-10** illustrates the common numbering system approved by ASHRAE.

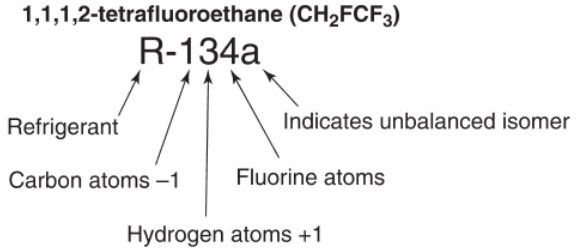

Goodheart-Willcox Publisher

Figure 9-10. By understanding the numbering system, you can determine the chemical components of each refrigerant.

Refrigerants with lowercase letters at the end of the title are used to differentiate between isomers. Isomers are molecules that have an identical number of atoms, but the atoms are arranged differently in different isomers. As a result, isomers can have the same number of atoms but different properties and characteristics.

Some fluorocarbon refrigerant numbers have only two digits, such as R-22 ($CHClF_2$). Since the refrigerant has only one carbon atom, the third number from the right is zero. When the third digit is zero, it is dropped. The second number from the right is two, because the refrigerant has one hydrogen atom. Because the refrigerant has two fluorine atoms, the first number from the right is also two.

For refrigerants in series 400, 500, 600, and 1000, the third number from the right identifies the series of the refrigerant, and the two numbers that follow it are assigned sequentially. These numbers do not denote the specific chemical structure. The numbers assigned to zeotropic (400s) and azeotropic (500s) blends may be followed by an uppercase letter. These letters denote blends that have the same component refrigerants, but at different ratios. For example, R-421A and R-421B are both composed of R-125 and R-134a. However, R-421A is made up of 58% R-125 and 42% R-134a, while R-421B is made up of 85% R-125 and 15% R-134a.

For series 700 refrigerants, the third number from the right denotes the series. The next two numbers indicate the molecular weight of the refrigerant. For example, R-717 is composed of one nitrogen atom (molecular weight of 14) and three hydrogen atoms (molecular weight of 3).

Instead of the prefix *R*, refrigerants can also be labeled with the prefix CFC, HCFC, HFC, or HFO, depending on which type of refrigerant they are. Thus, R-12 is the same as CFC-12.

9.3.3 Refrigerant Cylinder Color Code

Refrigerant cylinders are often color coded for easy identification. This practice helps to prevent accidental mixing of refrigerants within a system. A color code is *not* a requirement for all manufacturers. In addition, there are several colors that appear similar, so it is important to always read the label and identify the refrigerant by its ASHRAE number before using a cylinder. Popular refrigerants, with their R-numbers and cylinder color codes, are listed in **Figure 9-11**. Cylinders for recovered refrigerants are gray with yellow ends. These cylinders must be rated and approved for use by the Department of Transportation (DOT).

Copyright Goodheart-Willcox Co., Inc.

Refrigerant Cylinder Color Code		
Refrigerant Number	Cylinder Color	Type
R-11	Orange	CFC
R-12	White	CFC
R-13	Light blue (sky)	CFC
R-13B1	Pinkish-red (coral)	CFC
R-22	Light green	HCFC
R-23	Light blue-gray	HFC
R-113	Dark purple (violet)	CFC
R-114	Dark blue (navy)	CFC
R-123	Light blue-gray	HCFC
R-124	Deep green (DOT green)	HCFC
R-125	Medium brown (tan)	HFC
R-134a	Light blue (sky)	HFC
R-401A	Pinkish-red (coral)	HCFC
R-401B	Yellow-brown (mustard)	HCFC
R-401C	Blue-green (aqua)	HCFC
R-402A	Light brown (sand)	HCFC
R-402B	Green-brown (olive)	HCFC
R-404A	Orange	HFC
R-407A	Lime green	HFC
R-407B	Cream	HFC
R-407C	Medium brown	HFC
R-410A	Rose	HFC
R-500	Yellow	CFC
R-502	Light purple (lavender)	CFC
R-503	Blue-green (aqua)	CFC
R-507A	Blue-green (teal)	HFC
R-508B	Dark blue	HFC
R-717	Silver	Inorganic compound

Goodheart-Willcox Publisher

Figure 9-11. Table listing some of the more commonly used refrigerants and their corresponding color codes.

9.4 Refrigerant Properties

Refrigerants are designed for specific types of equipment based on the amount of heat they are required to transfer. There are refrigerants for low-temperature applications (freezer), medium-temperature applications (refrigeration), and high-temperature applications (air conditioning or comfort-cooling).

There is a great deal of information about refrigerants that HVACR technicians need to know. Much of this information is useful in understanding the refrigeration cycle in different systems. It is important to become familiar with pressure-enthalpy tables, pressure-enthalpy diagrams, and refrigerant characteristics and classification.

4

9.4.1 Refrigerant Toxicity and Flammability Properties

Various organizations have cataloged refrigerants based on levels of toxicity and flammability. Of particular importance to HVACR technicians, ASHRAE Standard 34 groups refrigerants by toxicity and flammability, **Figure 9-12**.

Toxicity is the ability of a refrigerant to be harmful or lethal with acute or chronic exposure. This exposure may be by contact, inhalation, or ingestion. ***Class A refrigerants*** are those not known to be toxic at concentrations equal to or below 400 parts per million (ppm). ***Class B refrigerants*** are those that are known to be toxic at concentrations equal to or below 400 ppm.

Flammability is a substance's capacity to ignite and burn. Certain refrigerants may form a flammable mixture when blended with air. Refrigerant flammability classification is indicated by the following numbers: 1 (no flammability), 2 or 2L (low flammability), or 3 (high flammability). The 2L designation for low flammability indicates substances that meet the requirements for low flammability (2) and, in addition, have a slow burn velocity. This

Toxicity and Flammability Ratings		
	Low Toxicity	High Toxicity
No flammability identified	A1	B1
Low flammability	A2L	B2L
	A2	B2
High flammability	A3	B3

Adapted from ANSI/ASHRAE Standard 34–2010

Figure 9-12. Table showing the ASHRAE Standard 34 toxicity and flammability classifications.

Copyright Goodheart-Willcox Co., Inc.

ASHRAE Refrigerant Safety Classifications		
Refrigerant Number	**Toxicity**	**Flammability**
R-11	A	1
R-12	A	1
R-22	A	1
R-123	B	1
R-134a	A	1
R-290	A	3
R-401A	A	1
R-404A	A	1
R-406A	A	2
R-407C	A	1
R-410A	A	1
R-500	A	1
R-502	A	1
R-507A	A	1
R-508B	A	1
R-600	A	3
R-717	B	2L
R-744	A	1
R-1234yf	A	2L
R-1234ze	A	2L

Adapted from ANSI/ASHRAE Standard 34–2010

Figure 9-13. Safety classifications for some popular refrigerants. Note that most refrigerants have the lowest toxicity and flammability ratings to help ensure technician safety when working with these refrigerants.

means that substances categorized as 2L are hard to ignite and form flames that are easy to extinguish. **Figure 9-13** shows the safety classifications of some common refrigerants.

9.4.2 Pressure-Temperature Curves

A ***pressure-temperature curve*** shows how a refrigerant's temperature and pressure both rise and fall in relation to each other, **Figure 9-14**. These curves illustrate the combined gas law principle that temperature and pressure are directly related. This means that as one rises or falls, the other does the same. Note that a pressure-temperature curve shows the traits of a refrigerant under saturated conditions, meaning the refrigerant's temperature is at its boiling point for the given pressure. As a result, a technician can use a pressure-temperature curve to determine at what temperature a refrigerant evaporates under any given pressure.

9.4.3 Pressure-Temperature (P/T) Charts

Pressure-temperature curves may be used during system service to determine if a unit is operating at the correct temperature or pressure. However, a ***pressure-temperature (P/T) chart*** may be used more frequently, **Figure 9-15**. A technician can use a pressure gauge to measure the pressure in an evaporator and then use a pressure-temperature chart to find the boiling temperature of the refrigerant inside the component. For example, the vapor pressure inside an evaporator of a system using R-134a is measured to be 30.4 psig. Using the pressure-temperature chart in **Figure 9-15**, a technician can determine that the temperature of the refrigerant in the evaporator is 35°F.

The temperature listed in a pressure-temperature chart is always the temperature at which the refrigerant is boiling. It is *not* the temperature of the tubing or even the actual temperature of the refrigerant. After a refrigerant has vaporized in the evaporator, it will absorb additional heat to change temperature. A pressure-temperature chart only shows the temperature at which the refrigerant boils when under a certain pressure.

Pro Tip

Refrigerant Temperature Guidelines

The temperature of the tubing is known as *skin temperature*. In most HVACR service operations, it is impractical to actually measure the refrigerant temperature. This would require placing a probe inside the refrigerant tubing to accurately measure the refrigerant temperature at various locations throughout the system. By measuring the tubing temperature, the service technician can use the following general guidelines to approximate the refrigerant temperature:

- The temperature of the refrigerant in an evaporator is about 8°F to 12°F (4°C to 7°C) colder than the evaporator when the compressor is running.
- The temperature of the refrigerant in the evaporator is the same as the evaporator temperature when the compressor is not running.
- The temperature of the refrigerant in an air-cooled condenser is approximately 30°F to 35°F (17°C to 19°C) warmer than the ambient temperature.
- The temperature of the refrigerant in a water-cooled condenser is approximately 20°F (11°C) warmer than the water temperature at the condenser's water outlet.
- The temperature of the refrigerant in the condenser will be about the same as that of the cooling medium (air- or water-cooled) after the unit has been shut off for 15 to 30 minutes.

Copyright Goodheart-Willcox Co., Inc.

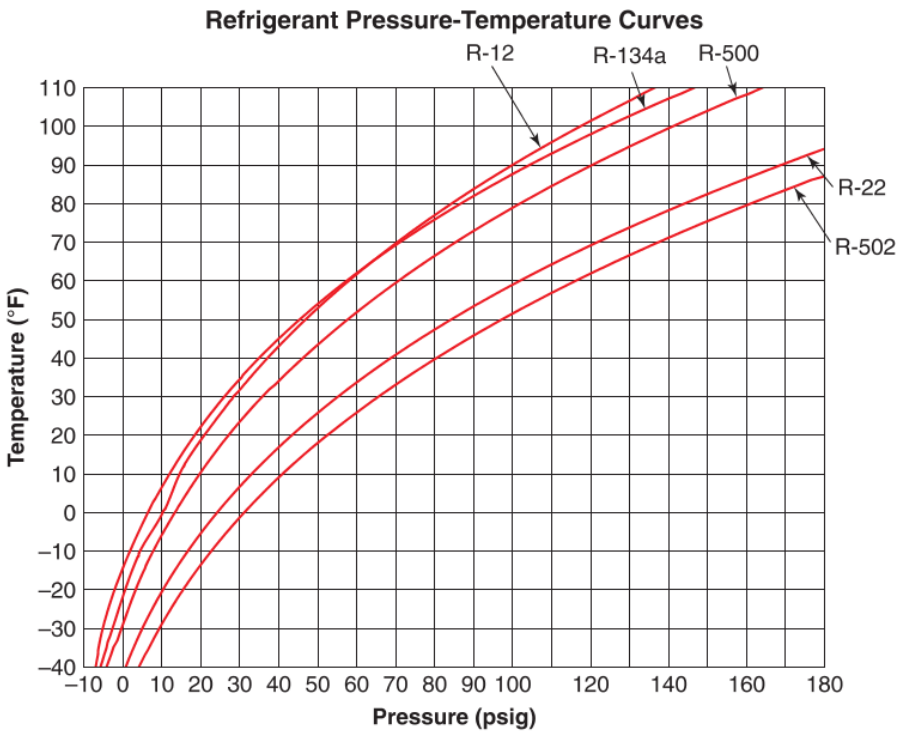

Goodheart-Willcox Publisher

Figure 9-14. This curve demonstrates the principle of the combined gas law that states pressure and temperature both rise and fall in relation to each other within a fixed volume. It also shows the varying pressure characteristics of different refrigerants. Given the same temperature, R-134a and R-12 operate at a lower pressure than R-22 or R-502.

R-134a Pressure-Temperature Chart	
Temperature (°F)	Pressure (psig)
–40	14.8*
–35	12.5*
–30	9.8*
–25	6.9*
–20	3.7*
–15	0.1*
–10	1.9
–5	4.1
0	6.5
5	9.1
10	11.9
15	15.0
20	18.4
25	22.1
30	26.1
35	30.4
40	35.0

*Pressures below atmospheric pressure are specified using in. Hg vacuum

Goodheart-Willcox Publisher

Figure 9-15. Like pressure-temperature curves, pressure-temperature charts can be used to find the temperature of a refrigerant if the pressure is known. Typically, pressure-temperature charts from manufacturers include data for more than just one refrigerant.

P/T charts are a necessary tool for every technician. They are commonly available as small portable cards or foldout papers from distributors and supply houses. In the last several years, refrigerant suppliers have begun supplying this electronically. Refrigerant information can be found as pdfs on company websites and also on apps, **Figure 9-16**.

9.4.4 Pressure-Enthalpy Tables

Pressure-enthalpy tables are useful resources that help the service technician diagnose problems prior to replacing components. By listing actual operating temperatures and pressures, a pressure-enthalpy table, like a pressure-temperature chart, helps a technician determine if a unit is operating correctly. Most manufacturers include a typical operating pressure-enthalpy table for a unit. By taking a few temperature and pressure measurements, a technician can compare these measurements to the recommended cycle. This will help narrow the troubleshooting of the unit to a specific component of the system.

The thermodynamic properties of a refrigerant under saturated conditions can be shown numerically in a ***pressure-enthalpy table***. In addition to showing

Copyright Goodheart-Willcox Co., Inc.

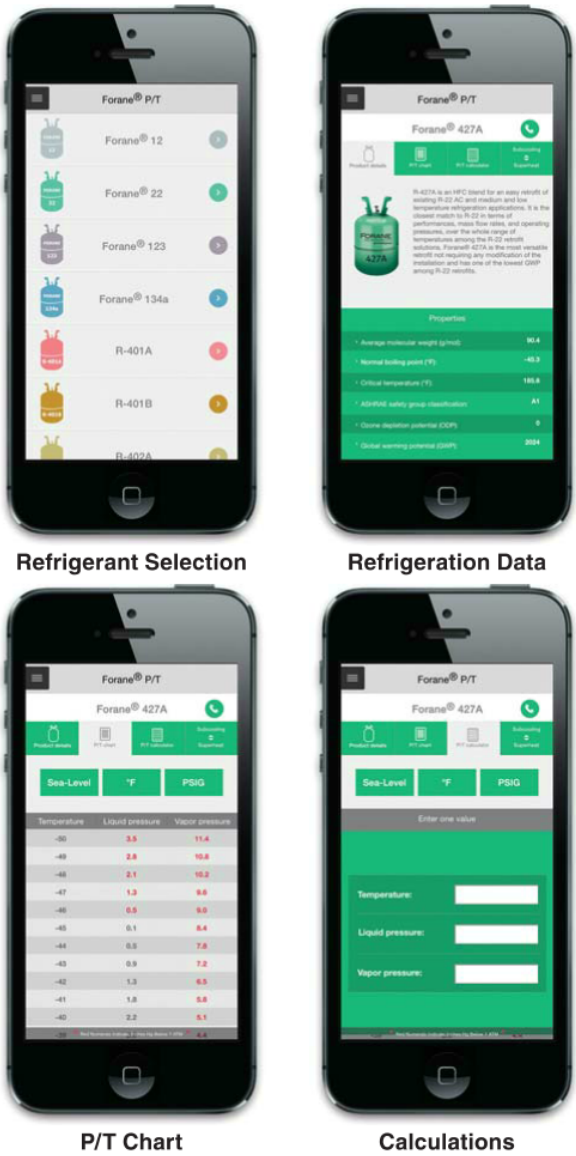

Arkema, Inc.

Figure 9-16. Refrigerant apps have various options for multiple refrigerants, such as basic information, P/T charts, and calculations.

the pressure and temperature of a refrigerant, a pressure-enthalpy table shows the volume of one pound of vapor and the density of the liquid refrigerant for any given temperature. The enthalpy, or heat content, of the refrigerant is also shown. An example of a pressure-enthalpy table is given in **Figure 9-17**. By subtracting the liquid heat content value from the vapor heat content value, you can calculate latent heat. This is the amount of heat that is required to change a substance from one phase into the other. To use a pressure-enthalpy table, find the temperature being investigated in the left-hand column and move across the columns horizontally to find the pressure, volume, density, and enthalpy at the given temperature.

9.4.5 Pressure-Enthalpy Diagrams

The thermodynamic properties of a refrigerant that are numerically shown in a pressure-enthalpy table can be visually graphed in a ***pressure-enthalpy diagram***. Although a pressure-enthalpy diagram includes the same information contained in a pressure-enthalpy table, it can be very confusing when you first try to interpret the different types of lines and data presented. **Figure 9-18** identifies each type of line in a pressure-enthalpy diagram.

Bounded by the saturated liquid line on one side and the saturated vapor line on the other, the saturation curve indicates where the refrigerant changes state. The vertical axis shows pressure measured in psia, and the horizontal axis is heat (enthalpy) in Btu/lb. Temperature levels are shown as horizontal lines inside the saturation curve and as two slightly diagonal lines outside the saturation curve area. The temperature line does not rise or fall inside the saturation curve because only latent heat is added or removed during state change. Quality lines are shown in the saturation curve area to indicate what percentage of the refrigerant is vapor as it changes from liquid to vapor.

Whereas pressure-temperature charts and pressure-enthalpy tables are useful for finding exact values, pressure-enthalpy diagrams can be used to help understand how each component of a system functions in the refrigeration cycle. For example, consider a typical R-134a cycle for a commercial, medium-temperature supermarket case, **Figure 9-19**. Line C–D represents a 35°F evaporator at 45.1 psia (30.1 psig). Line A–B is a condenser at 130°F and 213.6 psia (198.6 psig). Line B–C represents the compressor, and Line A–D represents the expansion of refrigerant across a metering device.

After passing through the metering device between Points A and D, the refrigerant entering the evaporator at Point D has a quality of 0.35. This means 35% of the refrigerant is flashed off (becomes flash gas) to keep the refrigerant enthalpy constant as temperature and pressure change. By following the line down from Point D, you can see that the refrigerant has an enthalpy of 116 Btu/lb. As the refrigerant travels through the evaporator, it absorbs heat. By following the line down from Point C, you can see that the refrigerant leaving the evaporator at Point C has an enthalpy of 179 Btu/lb. Not counting the flash gas, this difference of 63 Btu/lb is the heat absorbed by the refrigerant as it changes from liquid into vapor before it enters the compressor. The temperature of the refrigerant in the evaporator remains

Copyright Goodheart-Willcox Co., Inc.

R-134a Saturation Properties					
Temperature (°F)	Pressure (psia)	Vapor Volume (ft^3/lb)	Liquid Density (lb/ft^3)	Enthalpy (Btu/lb)	
				Liquid	Vapor
–50	5.50	7.67	89.40	–3.00	95.70
–40	7.42	5.78	88.40	0.00	97.17
–30	9.85	4.43	87.40	3.01	98.68
–20	12.89	3.45	86.35	6.05	100.18
–10	16.62	2.71	85.35	9.12	101.68
0	21.17	2.16	84.30	12.21	103.16
10	26.63	1.74	83.25	15.33	104.62
20	33.13	1.41	82.15	18.48	106.06
30	40.80	1.15	81.05	21.67	107.47
40	49.75	0.95	79.85	24.90	108.86
50	60.15	0.79	78.70	28.15	110.21
60	72.15	0.66	77.50	31.45	111.52
70	85.85	0.56	76.25	34.80	112.80
80	101.50	0.47	74.95	38.20	114.02
90	119.10	0.40	73.60	41.65	115.20
100	138.95	0.34	72.20	45.15	116.30
110	161.30	0.29	70.70	48.73	117.32
120	186.00	0.25	69.15	52.38	118.26
130	213.55	0.21	67.50	56.12	119.09
140	243.95	0.18	65.70	59.95	119.81
150	277.65	0.16	63.85	63.91	120.37

Goodheart-Willcox Publisher

Figure 9-17. An R-134a pressure-enthalpy table shows the thermodynamic properties of the refrigerant as a liquid and vapor under saturated conditions.

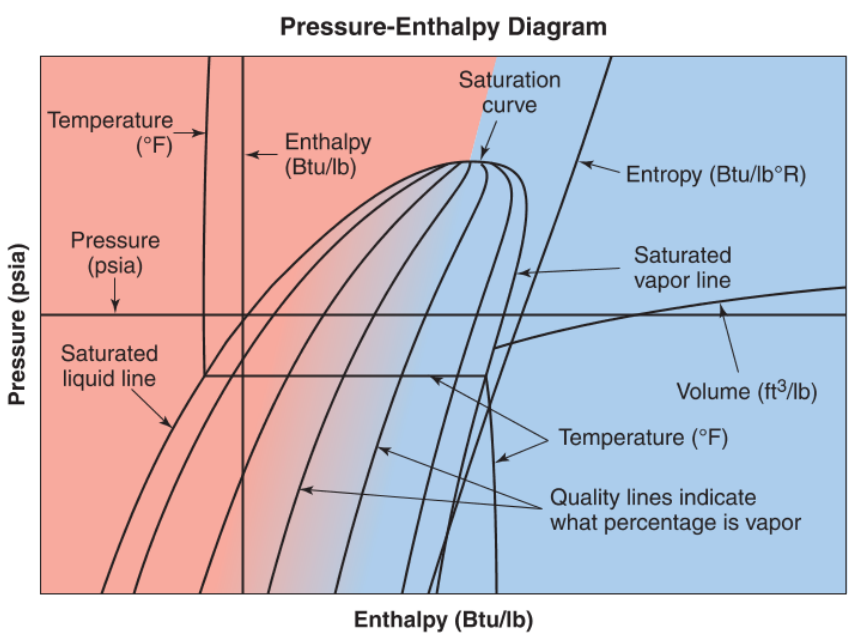

Goodheart-Willcox Publisher

Figure 9-18. This simplified pressure-enthalpy diagram identifies the values represented by each type of line in the diagram.

Copyright Goodheart-Willcox Co., Inc.

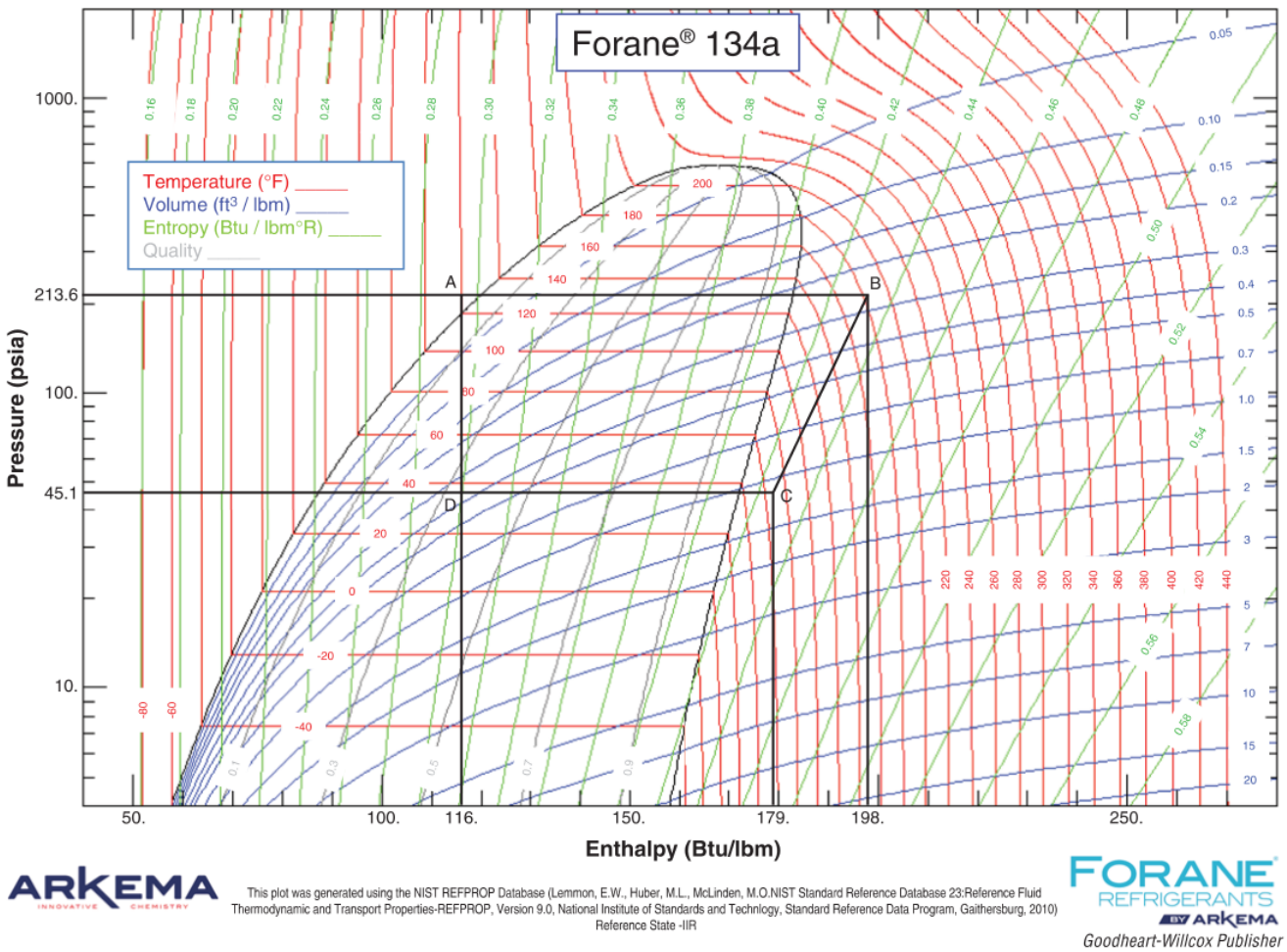

Figure 9-19. Pressure-enthalpy diagram indicating a typical R-134a cycle for a medium-temperature supermarket case. Note the pressure range from 45.4 psia to 213.7 psia and the enthalpy change from 116 Btu/lb to 198 Btu/lb.

steady at 35°F as it changes phase. Once the refrigerant has completely vaporized, which is indicated by the intersection of Line C–D and the saturated vapor line, it continues to absorb heat until it reaches the compressor at a temperature of 68°F. This additional heat added to raise the vapor's temperature is referred to as *superheat*.

In the compressor, between Points C and B, the temperature increases from 68°F to 183°F, the pressure increases from 45.1 psia (30.1 psig) to 213.6 psia (198.6 psig), and the enthalpy increases from 179 Btu/lb to 198 Btu/lb. This is an example of adiabatic compression. Because the vapor's volume is decreased so rapidly in the compressor, the heat of compression is not lost to surrounding materials, causing the refrigerant's pressure, temperature, and heat content to increase. The refrigerant vapor then leaves the compressor and enters the condenser at Point B. Between Points B and A, the refrigerant loses heat to the air or water surrounding the condenser and changes from a vapor back into a liquid. By the time it reaches the metering device at Point A, the refrigerant has dropped in temperature to 120°F and is completely liquid since it has crossed the saturated liquid line. Upon entering the metering device, the refrigerant's pressure drops from 213.6 psia (198.6 psig) to 45.1 psia (30.1 psig), and the cycle begins once more.

Coefficient of Performance

Pressure-enthalpy tables and diagrams can be used to calculate a refrigerant's coefficient of performance. ***Coefficient of performance (COP)*** is the ratio of refrigeration effect to the heat of compression. Refrigerants with higher coefficients of performance are more efficient than refrigerants with lower coefficients of performance. By calculating the coefficient of performance of different refrigerants that can be used in a system, a technician can determine which refrigerant would be most effective, assuming other factors, such as the size of the compressor, are equal.

Copyright Goodheart-Willcox Co., Inc.

Formula for Coefficient of Performance

$$\text{COP} = \frac{\text{Refrigeration effect}}{\text{Heat of compression}}$$

To calculate coefficient of performance, start by calculating the refrigeration effect. Using the pressure-enthalpy diagram of R-134a in **Figure 9-19** as an example, subtract the heat of the refrigerant entering the evaporator (116 Btu/lb) from the heat of the refrigerant entering the compressor (179 Btu/lb) to get a refrigeration effect of 63 Btu/lb.

Solution

Refrigeration effect = Compressor heat – evaporator heat
Refrigeration effect = 179 Btu/lb – 116 Btu/lb
Refrigeration effect = 63 Btu/lb

Next, calculate the heat of compression of R-134a using the pressure-enthalpy diagram. Heat of compression is the amount of energy added to the refrigerant when it is compressed. In the example in **Figure 9-19**, R-134a has an enthalpy of 198 Btu/lb as it leaves the compressor and an enthalpy of 179 Btu/lb as it enters the compressor. Thus, the heat of compression is 19 Btu/lb.

Solution

Heat of compression = Condenser heat – compressor heat
Heat of compression = 198 Btu/lb – 179 Btu/lb
Heat of compression = 19 Btu/lb

Finally, since coefficient of performance is a ratio, divide the refrigeration effect by the heat of compression. In the case of R-134a, the refrigeration effect of 63 Btu/lb divided by the heat of compression of 19 Btu/lb yields a coefficient of performance of 3.32:1. This means that for every 1 Btu added to the system by the compressor, 3.32 Btu are removed from the conditioned space.

Solution

$$\text{Coefficient of performance} = \frac{63\ \text{Btu/lb}}{19\ \text{Btu/lb}}$$

Coefficient of performance = 3.32:1

Plotting Refrigerant Blends

As discussed earlier in this chapter, refrigerant blends are made of two or more existing refrigerants. Of the two types of blends, azeotropic blends, which are in the 500 series, act like a single refrigerant with evaporating and condensing temperatures that are fixed at any given pressure. This means that the pressure-enthalpy diagrams for azeotropic blends appear similar to those for single refrigerants.

Zeotropic blends, however, have a range of temperatures over which the blend may evaporate or condense. As a result, temperature glide can be seen in the pressure-enthalpy diagrams for zeotropic blends, **Figure 9-20**. Unlike azeotropic blends and single refrigerants, zeotropic blends have lines of

Pressure-Enthalpy Diagram for a Zeotropic Blend

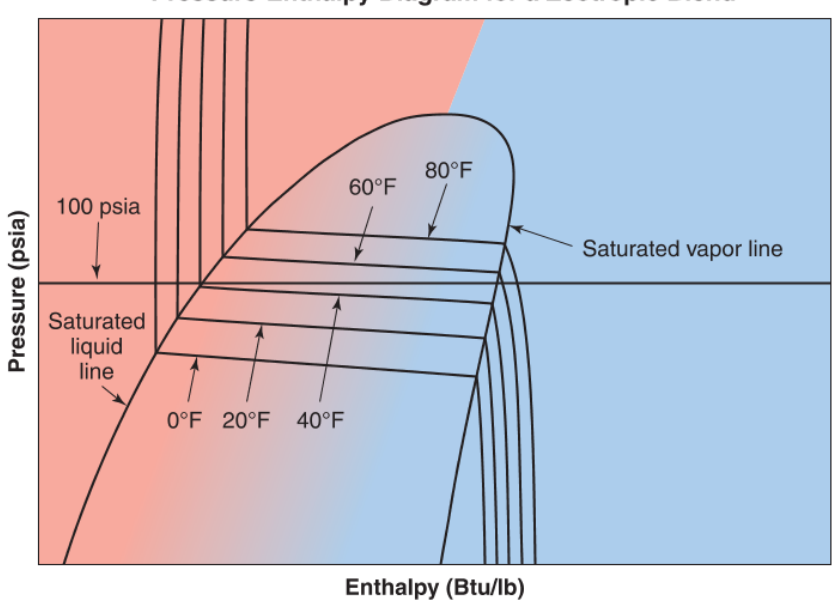

Goodheart-Willcox Publisher

Figure 9-20. This pressure-enthalpy diagram illustrates how temperature glide causes the lines of constant temperature to be angled inside the saturation curve for a zeotropic blend.

Copyright Goodheart-Willcox Co., Inc.

constant temperature that are slightly angled inside the saturation curve. The lines of constant temperature are angled to reflect the range of temperatures over which a zeotropic blend changes phase. Using **Figure 9-20** as an example, you can see that the 100 psia line of pressure crosses the saturated liquid line just above the 40°F temperature line. However, by the time the 100 psia pressure line cross the saturated vapor line, the zeotropic blend has a temperature closer to the 60°F temperature line.

9.5 Refrigerant Applications

Refrigerant applications are devised based on the pressure, temperature, and heat properties of a refrigerant. The type of refrigerant to be used in a given system is determined by the manufacturer. One type of refrigerant may be used in a number of applications. Several items are considered in the selection of the refrigerant:

- Boiling point of the refrigerant.
- Latent heat of the refrigerant.
- Operating temperatures required.
- Operating pressures based on required temperatures.
- Size of the equipment.

The chart in **Figure 9-21** shows some popular refrigerants and their applications. The pressure-enthalpy tables and diagrams for many of the refrigerants listed in the chart can be found in the *Appendix*. As you read through the following sections, use this chart as a convenient reference for identifying replacement refrigerants, refrigerant boiling points, and refrigerant operating pressures.

9.5.1 Phaseout of Refrigerants

The first refrigerants targeted for phaseout by the Montreal Protocol were CFCs, such as R-12, due to their large impact on the environment. The phaseout of R-12 was completed in 1996 in developed countries and in 2010 in all others. R-12 has been replaced with R-134a, which is safer for the environment because it has an ODP of zero. R-12 is no longer manufactured and is not permitted to be used in new HVACR equipment.

The next refrigerants targeted for phaseout are HCFCs, such as R-22. In the United States, the phaseout of R-22 will be completed in 2020, and it has been illegal since 2010 to manufacture new equipment containing R-22. R-22 is being replaced by R-404A, R-407C, and R-410A. The complete phaseout of all HCFC refrigerants will be implemented by 2030.

Although it is illegal to manufacture HVACR systems with phased-out refrigerants, it is not illegal to service existing units that have these refrigerants. Remaining stockpiles of CFC refrigerants, such as R-12, are still available today. However, the purchase of these refrigerants is restricted to EPA-certified technicians, who may still acquire large cans (over 20 lb) of R-12 and other CFC refrigerants. Technicians who have completed the EPA Motor Vehicle Certification may purchase small cans (under 20 lb) of R-12.

As the stock of available CFC refrigerants is exhausted, the cost will continue to increase. Phased-out CFC refrigerants typically cost much more than the price prior to phaseout. For economic reasons, it is often more practical (and better for the environment) to replace a phased-out refrigerant in a system with an approved refrigerant. Refer to **Figure 9-21**.

9.5.2 Criteria for New Refrigerants

As scientists learn more about global warming and the ozone layer, they have shifted their focus to reducing a refrigerant's length of decay and global warming potential. Although there is not a mandatory phaseout, even R-134a is beginning to be replaced in automotive air conditioning applications by R-1234yf, which has an ODP of zero and a GWP of four. Besides having an ODP of zero and a low GWP, a new refrigerant should have the following properties:

- It must follow the standards set forth by the EPA for recyclability and reclamation.
- It should be nonexplosive.
- It should be noncorrosive.
- It should make leaks easy to detect and locate.
- It should have a low boiling point.
- It should be a stable gas.
- It should permit machine or compressor parts moving in the fluid to be easily lubricated.
- It should have a high latent heat per pound (be able to absorb or expel a lot of heat during phase change) to produce a good cooling effect per pound of vapor pumped.
- It should have as little pressure difference as possible between evaporating pressure and condensing pressure. This increases pumping efficiency.
- It should be compatible with common materials used in HVACR systems, such as copper ACR tubing.

While the environmental impact of refrigerants is of great concern, newer refrigerants still must be safe for technicians to work with (stable and nonexplosive).

Copyright Goodheart-Willcox Co., Inc.

New refrigerants must also be effective at removing heat from a conditioned space (high latent heat and low boiling point). Refer to **Figure 9-21**.

9.5.3 Commonly Used New Refrigerants

The following refrigerants are the ones most commonly used in the manufacture of new HVACR equipment:

- R-134a—automotive air conditioning and transport refrigeration.
- R-404A—medium- and low-temperature refrigeration.
- R-407C—retrofit for R-22 equipment.
- R-410A—air conditioning.
- R-508B—low-temperature equipment.
- R-1234yf—automotive air conditioning.

9.6 Inorganic Refrigerants

There is a diversity of refrigerant applications beyond just comfort cooling and refrigeration. A number of industrial processes use refrigerants that do not fall under the category of halogenated, organic refrigerants as CFCs, HCFCs, and HFCs do. Instead, many industrial processes use inorganic refrigerants, which are classified in the 700 series. The most common of these inorganic refrigerants are explained in the sections that follow.

9.6.1 R-717 Ammonia

R-717 is commonly used in industrial systems. It is a chemical compound of nitrogen and hydrogen (NH_3). Under standard conditions, it is a colorless gas with a boiling point of –28°F (–33°C). The low boiling point makes it possible to have refrigeration at temperatures below zero without using pressures below atmospheric in the evaporator. Ammonia's latent heat is 565 Btu/lb (1310 kJ/kg) at 5°F (–15°C). Thus, large refrigerating effects are possible with relatively small-sized machinery. See **Figure 9-22**.

R-717 is flammable at 150,000 to 270,000 ppm. Ammonia has a strong effect on the respiratory system, and only very small quantities of it can be breathed safely. Because of its pronounced and distinguishable odor, R-717 is easily detected in the air. At 3 to 5 ppm, ammonia can be identified by smell. At 15 ppm, the odor is quite irritating. At 30 ppm, a service technician will need a respirator. Exposure for five minutes to 50 ppm is the maximum allowed by the Occupational Safety and Health Administration (OSHA). Ammonia poses a fatal hazard at 5000 ppm.

Safety Note

Working with Ammonia

Wear a tight-fitting respirator when working with R-717 and related equipment. Always stand to one side when operating an ammonia valve because a small stem leak can burn and damage the eyes. An excessive leak can cause an almost instant loss of consciousness. Use a sulfur candle or sulfur spray vapor to detect R-717 leaks, which form smoky white fumes in the presence of sulfur.

4

The use of ammonia presents no special problems related to lubrication unless extreme temperatures are encountered. R-717 is lighter than oil, and there is no separation of the two. Excess oil in the evaporator may be removed by opening a valve in the bottom of the evaporator. R-717 is used in large compression systems with reciprocating compressors and also in many absorption-type systems. Condensers for R-717 are usually water-cooled. Proper training and safety protocols should be followed when working with ammonia.

The International Institute of Ammonia Refrigeration (IIAR) publishes numerous guidelines that technicians can reference when working with R-717. These publications provide guidance for the safe installation, repair, and operation of ammonia-based mechanical refrigeration systems. They also detail the safety precautions that must be followed when handling or working with ammonia.

Caution

Ammonia and Copper

R-717 attacks copper and bronze in the presence of moisture. However, it does not corrode aluminum, iron, or steel. Ammonia systems often use steel piping to transport the refrigerant.

9.6.2 Cryogenic Fluids

Many large food processing plants use cryogenic fluids, such as liquid nitrogen or carbon dioxide, to rapidly freeze foods. These liquid refrigerants are often called ***freezants***, and they range in temperature from –250°F (–157°C) to nearly absolute zero (–460°F or –273°C). This is called the cryogenic range. Common cryogenic fluids are R-702 (hydrogen), R-704 (helium), R-720 (neon), R-728 (nitrogen), R-729 (air), R-732 (oxygen), and R-740 (argon).

Cryogenic fluids must be kept in insulated-vacuum containers. The containers have to withstand extremely low temperatures without losing their strength and be well insulated, since the temperatures of the fluids inside the containers are very low.

Copyright Goodheart-Willcox Co., Inc.

Refrigerant Properties and Applications

Refrigerant	Type	Name	Formula	Cylinder Color	Boiling Point* °F (°C)	Operating Pressures**		Replaces/ *Replaced By*	Lubricant***	Application
						Evaporating	Condensing			
R-11	CFC	Trichlorofluoro-methane	CCl_3F		75 (24)	23.9 in. Hg vacuum	3.5 psig	*R-123*	AB/MO	Large air conditioning systems, low-pressure centrifugal chillers
R-12	CFC	Dichlorodifluoro-methane	$CCl2F_2$		–22 (–30)	11.8 psig	93.3 psig	*R-134a, R-401A, R-401B, R-409A*	AB/MO	Domestic refrigeration and air conditioning, automotive air conditioning
R-22	HCFC	Chlorodifluoro-methane	CHF_2Cl		–41 (–41)	28.3 psig	158.2 psig	*R-404A, R-407C R-410A*	POE/AB/MO	Residential and commercial air conditioning, frozen-food storage, supermarket display cases
R-123	HCFC	2,2-dichloro-1,1, 1-trifluoroethane	$CHCl_2CF_3$		82 (28)	25.2 in. Hg vacuum	1.2 psig	R-11	AB/MO	Low-pressure centrifugal chillers
R-134a	HFC	1,1,1, 2-tetrafluoro-ethane	CH_2FCF_3		–15 (–26)	9.1 psig	97.0 psig	R-12	POE/PAG	Medium- and high-temperature refrigeration, chiller equipment, domestic appliances, automotive air conditioning
R-401A	HCFC zeotropic blend	53% R-22 / 13% R-152a / 34% R-124	CHF_2Cl + CH_3CHF_2 + $CHClFCF_3$		–30 (–34)	10.1–16.1 psig	96.9–112.4 psig	R-12, R-500	POE/AB	Walk-in coolers, beverage dispensers, vending machines, supermarket systems
R-404A	HFC zeotropic blend	44% R-125 / 52% R-143a / 4% R-134a	CHF_2CF_3 + CH_3CF_3 + CH_2FCF_3		–51 (–46)	37.7–38.8 psig	190.5–192.5 psig	R-22, R-502	POE	Low- and medium-temperature commercial refrigeration
R-407C	HFC zeotropic blend	23% R-32 / 25% R-125 / 52% R-134a	CH_2F_2 + CHF_2CF_3 + CH_2FCF_3		–44 (–42)	23.5–34.3 psig	152.9–179.8 psig	R-22	POE	Residential and commercial heat pumps and air conditioners, medium temperature applications

Copyright Goodheart-Willcox Co., Inc.

R-410A	HFC zeotropic blend	50% R-32 / 50% R-125	CH_2F_2 + CHF_2CF_3		–61 (–52)	54.9–55.1 psig	257.7–258.6 psig	R-22	POE	Residential and light commercial heat pumps and air conditioners
R-500	CFC azeotropic blend	73.8% R-12 / 26.2% R-152a	CCl_2F_2 + CH_3CHF_2		–28 (–33)	16.4 psig	112.9 psig	*R-401A, R-409A*	AB/MO	Residential and commercial air conditioning, domestic refrigeration, commercial chillers
R-502	CFC azeotropic blend	48.8% R-22 / 51.2% R-115	CHF_2Cl + $CClF_2CF_3$		–50 (–46)	35.9 psig	176.6 psig	*R-402A, R-404A, R-408A, R-507A*	AB/MO	Supermarket freezers, refrigerated cases, frozen food processing plants
R-507A	HFC azeotropic blend	50% R-125 / 50% R-143a	CHF_2CF_3 + CH_3CF_3		–52 (–47)	40.0 psig	198.3 psig	R-22, R-502	POE	Commercial refrigeration systems, supermarket display cases, ice machines
R-508B	HFC azeotropic blend	46% R-23 / 54% R-116	CHF_3 + CF_3CF_3		–126 (–88)	256.1 psig	N/A	R-13, R-503	POE	Low temperature medical freezers and environmental chambers

*The boiling points listed are for atmospheric pressure

**Pressures are given for a 5° evaporator temperature and an 86° condenser temperature—these are referred to as Standard Ton Conditions

***POE = Polyol ester / AB = Alkylbenzene / MO = Mineral oil / PAG = Polyalkylene glycol

Goodheart-Willcox Publisher

Figure 9-21. This chart serves as a comprehensive reference for identifying and comparing the properties and applications of some commonly used refrigerants.

Copyright Goodheart-Willcox Co., Inc.

R-717 Saturation Properties						
Temperature (°F)	Pressure (psia)	Vapor Volume (ft^3/lb)	Liquid Density (lb/ft^3)	Enthalpy (Btu/lb)		Latent Heat (Btu/lb)
				Liquid	Vapor	
–100	1.24	182.40	45.52	–63.3	572.5	635.8
–75	3.29	72.81	44.52	–37.0	583.3	620.3
–50	7.67	33.08	43.49	–10.6	593.7	604.3
–35	12.05	21.68	42.86	5.3	599.5	594.2
–25	15.98	16.66	42.44	16.0	603.2	587.2
–20	18.30	14.68	42.22	21.4	605.0	583.6
–15	20.88	12.97	42.00	26.7	606.7	580.0
–10	23.74	11.50	41.78	32.1	608.5	576.4
–5	26.92	10.23	41.56	37.5	610.1	572.6
0	30.42	9.12	41.34	42.9	611.8	568.9
5	34.27	8.15	41.11	48.3	613.3	565.0
10	38.51	7.30	40.89	53.8	614.9	561.1
15	43.14	6.56	40.66	59.2	616.3	557.1
20	48.21	5.91	40.43	64.7	617.8	553.1
25	53.73	5.33	40.20	70.2	619.1	548.9
35	66.26	4.37	39.72	81.2	621.7	540.5
50	89.19	3.29	39.00	97.9	625.2	527.3
75	140.50	2.13	37.74	126.2	629.9	503.7
100	211.90	1.42	36.40	155.2	633.0	477.8

Goodheart-Willcox Publisher

Figure 9-22. Pressure-enthalpy table showing the temperature, pressure, volume, and heat content of R-717 (ammonia). Note the high latent heat, which is calculated by subtracting the liquid heat content from the vapor heat content.

Inside the container, pressure is kept at a low level corresponding to the fluid's vapor pressure. **Figure 9-23** lists the boiling temperatures of various refrigerants and cryogenic fluids.

Many commercial food companies freeze food by using large conveyors to move trays of food through a cooling chamber. The food is sprayed with the cryogenic fluid, which rapidly freezes the product. The quick freeze action of cryogenics reduces the amount of ice crystals that form in the food. This process results in less damage to vegetables and meats during freezing than traditional refrigeration. In general, cryogenic fluids are expendable. This means that they are only used once, and then the vapor is vented to the atmosphere.

Caution

Cryogenic Fluid Containers

Do not attempt to use any of cryogenic fluids in any container or device that was not designed specifically to hold that fluid.

Safety Note

Avoiding Skin Contact

There are certain precautions that must be taken by anyone handling these fluids. Cryogenic fluids must never be allowed to touch the skin. Such contact would result in immediate freezing of the flesh. A person handling cryogenic fluids must have his or her entire body protected by suitable clothing, helmets, and gloves.

9.6.3 Expendable Refrigerants

An ***expendable refrigeration system*** cools a substance or absorbs heat from an evaporator and then releases its refrigerant into the atmosphere. An expendable refrigeration system uses an ***expendable refrigerant***, which evaporates only once in the system and is then vented. It is not collected and recondensed for additional refrigeration cycles, as is the case with most compression and absorption systems. Expendable refrigeration systems are sometimes referred to as

Copyright Goodheart-Willcox Co., Inc.

Boiling Temperature at Atmospheric Pressure		
Fluid	**Fahrenheit (°F)**	**Celsius (°C)**
Water	212	100
R-134a	–15	–26
R-717 (ammonia)	–28	–33
R-22	–41	–41
R-404A	–51	–46
R-410A	–61	–52
R-508B	–126	–88
R-744 (carbon dioxide)	–109	–78
R-1150 (ethylene)	–155	–104
Beginning of the Cryogenic Range:	–250	–157
R-50 (methane)	–259	–161
R-732 (oxygen)	–297	–183
R-729 (air)	–313	–192
R-728 (nitrogen)	–320	–196
R-720 (neon)	–411	–246
R-702 (hydrogen)	–423	–253
R-704 (helium)	–452	–269
Absolute Zero	–460	–273

Goodheart-Willcox Publisher

Figure 9-23. Note the differences between the boiling points at atmospheric pressure of some halogenated refrigerants and the boiling points of fluids in the cryogenic range.

chemical refrigeration systems or *open-cycle refrigeration systems*.

The most common expendable refrigerants are:

- Liquid helium (R-704)—boiling temperature at atmospheric pressure: –452°F (–269°C).
- Liquid nitrogen (R-728)—boiling temperature at atmospheric pressure: –320°F (–196°C).
- Liquid carbon dioxide (R-744)—boiling temperature at atmospheric pressure: –109°F (–78°C).

9.7 Refrigeration Lubricants

In a mechanical refrigeration system, moving parts must be lubricated for long life and efficient performance. ***Refrigeration lubricant*** is lubricant charged into a refrigeration system in order to lubricate the contact between moving parts. It circulates through the same tubes and components as the refrigerant, providing lubrication.

Refrigeration lubricants must provide good lubricating qualities under severe conditions. The viscosity must be correct for the refrigerant and the machine in which it is used. The lubricant must also be free of moisture.

9.7.1 Properties of Refrigeration Lubricants

Refrigeration lubricants must have certain properties in order to circulate properly through a system with refrigerant. They must be able to flow in low temperatures. These lubricants also come in direct contact with hot motor windings in hermetic units. Therefore, the lubricant must also be able to withstand high temperatures and remain harmless to refrigerants and equipment.

Refrigeration lubricant must be able to travel freely through all parts of the system. The lubricant's ability to do this is determined by several factors. These include the type of refrigerant used, the operating temperatures in the system, and the properties of the lubricant. A good refrigeration lubricant has low wax content, high thermal and chemical stability, a low pour point, and low viscosity.

Wax Content

Many refrigeration lubricants contain paraffin wax. When wax precipitates out of a lubricant at low temperatures, it is called ***wax separation***. Wax that separates from a refrigerant-lubricant mixture can plug refrigerant control orifices and clog a refrigeration system. Lubricants that have low wax content are desirable because they reduce the problems associated with wax separation.

A floc test is a test that determines how easily wax separates out of a mixture of refrigerant and lubricant. This test is used on mineral oils and the refrigerants that are miscible (mixable) with mineral oil. Examples of these refrigerants include R-11, R-12, and R-22. The test is conducted by mixing 10% refrigerant with 90% oil. The mixture is sealed in a glass tube, and then it is cooled slowly until a flocculent (cloudy) precipitate of wax appears. The highest temperature at which this occurs is recorded as the ***floc point***. Using a refrigerant with the proper floc point will help avoid wax separation at the lowest temperature in the system.

Pro Tip

Floc Point

Synthetic lubricants do not contain wax and therefore have no floc point.

Copyright Goodheart-Willcox Co., Inc.

Thermal Stability and Flash Point

Thermal stability is a lubricant's ability to remain stable in high heat areas. Lubricants with lower thermal stability tend to form hard carbon deposits at hot spots in the compressor, such as discharge ports. A lubricant's chemical stability is its ability to not react on a chemical level with refrigerants or other substances found in a refrigeration system. If a lubricant is not chemically stable, it can break down easily and form corrosive solutions that can damage the refrigeration system.

The temperature at which the vapors from a lubricant surface ignite is the lubricant's ***flash point***. In many hermetic units, refrigeration lubricants come in direct contact with the hot motor windings in the compressor, which makes having a high flash point important. The lower the flash point of a lubricant, the more likely it is that the lubricant will ignite when it is exposed to high temperatures.

Viscosity

Viscosity is a measure of a liquid's resistance to flow. A fluid with high viscosity resists flowing, while a fluid with low viscosity flows more easily. The viscosity of a lubricant changes with the temperature. Lubricants at very low temperatures may not pour and can become a plastic solid. The lowest temperature at which a lubricant will flow is called the ***pour point***. Use lubricants that have a pour point appropriate for the operating temperatures inside the refrigeration system.

Domestic freezers with refrigerant temperatures as low as 0°F to 5°F (–18°C to –15°C) require a lubricant with a pour point of –20°F (–29°C). For commercial food freezers with refrigerant temperatures as low as –50°F (–46°C), a pour point of –60°F (–51°C) is desirable.

Dielectric Properties

The amount of moisture in a refrigeration lubricant can be measured by its resistance to the flow of a current of electricity through it without breaking down. This is known as its ***dielectric strength***. A refrigeration lubricant with acceptable moisture content should have a minimum dielectric value of 25,000 volts.

Refrigeration Lubricant Additives

To improve the performance of a lubricant, many manufacturers add certain chemicals. These are designed to inhibit foaming or the formation of sludge. Lubricants that contain moisture or air can form sludge or varnish. This may cause damage to the unit.

Refrigeration lubricants sometimes include a very small amount of antifoam inhibitor to reduce foaming. Compressor parts are sometimes given a phosphating treatment to improve lubrication.

9.7.2 Types of Refrigeration Lubricant

There are a variety of refrigeration lubricants available, including mineral oils (MO), polyol ester (POE) lubricants, alkylbenzene (AB) lubricants, and polyalkylene glycol (PAG) lubricants. The type of lubricant used must match the type of refrigerant used. Most new azeotropic mixtures and single HFC refrigerants use polyol ester lubricants. Traditional CFC refrigerants require mineral oil. Typically, different types of lubricant should not be used within the same system.

Mineral oils (MOs) are a type of refrigeration lubricant made from refined crude oil. Since mineral oils are *not* miscible with most HFC refrigerants, MOs are generally used only with CFCs and HCFCs. ***Polyol ester (POE) lubricants*** are a group of synthetic refrigeration lubricants that are compatible with CFCs, HCFCs, and HFCs. POEs are miscible with mineral oil and alkylbenzene lubricants. There are numerous grades of polyol ester lubricants. POEs may not be approved for use in certain compressors.

Alkylbenzene (AB) lubricants are refrigeration lubricants manufactured from propylene and benzene. They are used with CFCs, HCFCs, and blends that include CFCs and HCFCs. ***Polyalkylene glycol (PAG) lubricants*** are refrigeration lubricants designed for use with HFCs. They tend to attract moisture and poorly lubricate aluminum on steel. Therefore, PAGs should not be used in compressors with aluminum pistons in steel cylinders. They are also not compatible with chlorine, so any R-12 retrofits must be thoroughly flushed before adding PAGs.

POE, AB, and PAG lubricants were designed specifically for the new, alternative refrigerants. **Figure 9-24** lists the appropriate lubricant for various refrigerants.

9.7.3 Handling Refrigeration Lubricants

Refrigeration lubricant must be kept in sealed containers, transferred in chemically cleaned containers and lines, and not exposed to air where it will absorb moisture. Refrigeration lubricant comes in one- or five-gallon cans and in barrels. It is advisable to purchase lubricant in small sealed containers, holding only enough for each separate service operation. Unused lubricant that is allowed to remain in the container or lubricant transferred from one container to another may pick up some moisture and dirt. Always seal a lubricant container after drawing lubricant from it, **Figure 9-25**.

Copyright Goodheart-Willcox Co., Inc.

Compatible Refrigerants and Lubricants				
Refrigerant	Appropriate Lubricant*			
R-11		AB	MO	
R-12		AB	MO	
R-13		AB	MO	
R-22		AB	MO	
R-23	POE			
R-123		AB	MO	
R-124		AB	MO	
R-125	POE			
R-134a	POE			PAG**
R-290	POE	AB	MO	
R-401A	POE	AB		
R-401B	POE	AB		
R-401C	POE	AB		
R-402A	POE	AB	MO	
R-402B	POE	AB	MO	
R-403B	POE	AB	MO	
R-404A	POE			
R-407A	POE			
R-407B	POE			
R-407C	POE			
R-410A	POE			
R-500		AB	MO	
R-502		AB	MO	
R-503		AB	MO	
R-507A	POE			
R-508B	POE			
R-600a	POE	AB	MO	
R-717			MO	
R-1234yf	POE			PAG
R-1234ze	POE			PAG

*POE = Polyolester / AB = Alkylbenzene / MO = Mineral oil / PAG = Polyalkylene glycol

**PAG is used primarily for automotive applications as a lubricant

Goodheart-Willcox Publisher

Figure 9-24. This table shows which lubricants are appropriate for specific types of refrigerants.

9.7.4 Adding Lubricant to a System

Having the correct amount of lubricant in a system is very important. Lack of lubricant will shorten the life of compressors, increase friction, and cause noise. However, an overcharge of lubricant will cause the compressor to pump excessive amounts of lubricant, reducing its refrigerant-pumping capacity. It will also subject the compressor valves to severe strain.

When considering which lubricant to add to a system, follow the equipment manufacturer's recommendations. Make sure the lubricant is compatible with the refrigerant being used. Also, be sure to follow the manufacturer's viscosity, pour point, and floc point recommendations. On a service call, add lubricant only if there is a sign of lubricant leakage.

Most hermetic compressors do not have a method of measuring the amount of oil in a system, but it is rarely necessary to add lubricant to a hermetic system. However, leaking refrigerant always carries some lubricant with it. This lost lubricant should be replaced. If the hermetic unit is equipped with service valves, lubricant can be siphoned or poured in.

If a system has a low-side leak, moisture and air may have entered. In this case, it is best to replace the refrigeration lubricant. Measure the amount of lubricant removed and replace it with the same amount of clean, dry lubricant. Some compressors have an oil reservoir and sight glass that allows a technician to add new refrigerant oil by sight. The unit should be charged in much the same way as when adding refrigerant to the system.

Lubricant may also be added to a system using specially sized injectors or a hand pump, **Figure 9-26**. Charging lines must be purged to remove air, moisture, and dirt. A hand pump can build up pressures as high as 300 psig (2200 kPa), which allows lubricant to be forced into the system even when the system is under pressure. Adding lubricant using a hand pump is covered in Chapter 55, *Servicing Commercial Systems*.

Courtesy of Sporlan Division - Parker Hannifin Corporation

Figure 9-25. Certain refrigeration lubricants must be stored in plastic, while others must be stored in metal.

Copyright Goodheart-Willcox Co., Inc.

Ritchie Engineering Co., Inc. – YELLOW JACKET Products Division

Figure 9-26. Injector canisters and a manual hand pump are two effective methods of adding refrigeration lubricant to a system.

9.7.5 Contaminated Lubricant

Lubricant that is removed from a system should be translucent. Discoloration means that it is impure. When this has happened, new driers and filters should be placed in the system. These will keep the new lubricant clean. Another indicator of contaminated lubricant is odor. Dark-black, pungent oil is an indicator of compressor failure. Metal shavings and chips are another sure sign that the compressor is in need of replacement.

Safety Note

Acidic Refrigeration Lubricant

Contaminated lubricant from a hermetic system is very dirty and smells bad. It may also be acidic and can burn skin. Avoid any contact.

Copyright Goodheart-Willcox Co., Inc.

Chapter Review

Summary

- In order to protect the environment, the Environmental Protection Agency (EPA) enforces regulations outlined in the Clean Air Act for working with refrigerants. All HVACR technicians must be certified by the EPA to work with refrigerants.
- A refrigerant's ozone depletion potential (ODP) and global warming potential (GWP) are number ratings used to determine the refrigerant's effect on the ozone layer and climate change.
- CFCs, HCFCs, and HFCs are carbon-based, halogenated refrigerants. They are the most commonly used refrigerants in mechanical refrigeration systems. HFCs have the lowest ODP and are being used to replace CFCs or HCFCs that have been phased out. HFOs and HCs are two of the newer types of refrigerants.
- Azeotropes respond to pressure and heat changes like a single refrigerant, having fixed boiling (bubble) and condensing (dew) points. The component refrigerants in a zeotropic blend respond individually to pressure and heat, each having different boiling and condensing points. Since refrigerants that make up a zeotrope have different bubble points and dew points, the result is temperature glide during phase change.
- Refrigerants are identified by a standardized numbering system. Each refrigerant is assigned a number that follows the letter *R*. The third number from the right indicates the series of the refrigerant.
- ASHRAE Standard 34 categorizes refrigerants according to their toxicity and flammability.
- Pressure-temperature curves and charts show how a refrigerant's temperature and pressure both rise and fall in relation to each other. They can be used to determine the proper operating temperature and pressure of a system.
- A pressure-enthalpy table numerically shows the thermodynamic properties of a refrigerant under saturated conditions. It can be used to calculate the latent heat of a refrigerant.
- A pressure-enthalpy diagram is a graph version of a pressure-enthalpy table. Pressure-enthalpy diagrams can be used to calculate a refrigeration system's coefficient of performance.
- The type of refrigerant to be used in a given system is determined by the manufacturer. However, one type of refrigerant may be used in a number of applications. Several items that are considered when selecting a refrigerant include the refrigerant's boiling point, latent heat, and operating temperatures and pressures.
- A popular inorganic refrigerant is R-717, also called ammonia (NH_3). Its low boiling point makes it ideal for low-temperature refrigeration. R-717 refrigeration systems are constructed of iron or steel, as ammonia attacks copper in the presence of moisture.
- An expendable refrigerant cools a substance or absorbs heat from an evaporator and then is released into the atmosphere, being used only once. Cryogenic fluids are often used as expendable refrigerants.
- Refrigeration lubricant is charged into a refrigerant circuit with the system's refrigerant in order to lubricate the contact between moving parts. Refrigeration lubricants must be compatible with the refrigerant and components in the system.

Review Questions

Answer the following questions using information in this chapter.

1. Ozone depletion potential is a numeric value assigned to refrigerants to show how harmful they can be to the ozone compared to which refrigerant?
   A. R-11
   B. R-134a
   C. R-600a
   D. R-1234ze
2. A refrigerant's global warming potential (GWP) is based on a ratio of the refrigerant's warming effect compared to the warming effect of _____.
   A. argon
   B. carbon dioxide
   C. nitrogen
   D. oxygen
3. Refrigerants that are composed of carbon, chlorine, and fluorine are called _____.
   A. CFCs
   B. HCFCs
   C. HFCs
   D. inorganic compounds

Copyright Goodheart-Willcox Co., Inc.

4. Refrigerants that are composed of carbon, chlorine, fluorine, and hydrogen are called _____.
   A. CFCs
   B. HCFCs
   C. HFCs
   D. inorganic compounds
5. Which halogenated refrigerants have no ozone depletion potential?
   A. CFCs
   B. HCFCs
   C. HFCs
   D. Inorganic compounds
6. Refrigerant blends that act like a single refrigerant with fixed boiling and condensing points are called _____.
   A. azeotropes
   B. expendable refrigerants
   C. freezants
   D. zeotropes
7. Refrigerant blends with refrigerants that respond individually to changes in temperature and pressure are called _____.
   A. azeotropes
   B. expendable refrigerants
   C. freezants
   D. zeotropes
8. The separating of a zeotropic blend's individual refrigerants during phase change is known as _____.
   A. bubble point
   B. dew point
   C. fractionation
   D. temperature glide
9. The range of temperatures at which individual refrigerants in a zeotropic blend change phase is called _____.
   A. bubble point
   B. dew point
   C. fractionation
   D. temperature glide
10. Refrigerants that are represented by 400s in the numbering system are called _____.
    A. azeotropes
    B. expendable refrigerants
    C. freezants
    D. zeotropes
11. Refrigerants that are represented by 500s in the numbering system are called _____.
    A. azeotropes
    B. expendable refrigerants
    C. freezants
    D. zeotropes
12. Which widely used CFC refrigerant that is no longer manufactured is stored in white cylinders?
    A. R-12
    B. R-22
    C. R-134a
    D. R-500
13. The ability of a refrigerant to be harmful or lethal with acute or chronic exposure is its _____.
    A. coefficient of performance
    B. flammability
    C. fractionation
    D. toxicity
14. A substance's capacity to ignite and burn is its _____.
    A. coefficient of performance
    B. flammability
    C. fractionation
    D. toxicity
15. A _____ visually represents how a refrigerant's temperature and pressure both rise and fall in direct relation to each other.
    A. pressure-temperature chart
    B. pressure-enthalpy table
    C. pressure-temperature curve
    D. material safety data sheet
16. A refrigerant's thermodynamic properties in a saturated condition are shown only numerically in a _____.
    A. pressure-enthalpy diagram
    B. pressure-enthalpy table
    C. pressure-temperature curve
    D. material safety data sheet
17. The EPA established the SNAP program for which purpose?
    A. To evaluate and regulate substitutes for high ODP refrigerants.
    B. To progress the phase out of older refrigerants.
    C. Work toward meeting the ozone protection provisions of the Clean Air Act.
    D. All of the above.

Copyright Goodheart-Willcox Co., Inc.

18. How can the refrigerant temperature in an air-cooled condenser be estimated?
    A. By adding 30°F to 35°F to the ambient temperature of air around the condenser
    B. By subtracting 25°F from the present condenser temperature
    C. By placing a temperature probe inside the suction line
    D. None of the above.
19. In 2010, the United States stopped manufacturing new units that contain _____, a widely used HCFC refrigerant.
    A. R-12
    B. R-22
    C. R-134a
    D. R-410A
20. Which of the following is *not* a desirable property for new refrigerants?
    A. Noncorrosive
    B. Nonexplosive
    C. High boiling point
    D. Stable in gas form
21. Which of the following refrigerants has a low GWP and can be used as a replacement for R-134a in automotive air conditioning?
    A. R-125
    B. R-717
    C. R-410A
    D. R-1234yf
22. The colorless refrigerant often used in large absorption systems that has a distinct odor is _____.
    A. R-704 (helium)
    B. R-717 (ammonia)
    C. R-728 (nitrogen)
    D. R-744 (carbon dioxide)
23. A floc test determines the temperature at which _____ separates out of a mixture of refrigerant and lubricant.
    A. water
    B. mineral oil
    C. wax
    D. polyol ester
24. Which term is a measure of a liquid's resistance to flow?
    A. Viscosity
    B. Floc point
    C. Flash point
    D. Chemical stability
25. Which type of lubricant is *not* miscible with HFC refrigerants, so it cannot be used with them?
    A. Alkylbenzene
    B. Polyol ester
    C. Mineral oil
    D. Polyalkylene

Copyright Goodheart-Willcox Co., Inc.

CHAPTER 10 Equipment and Instruments for Refrigerant Handling and Service

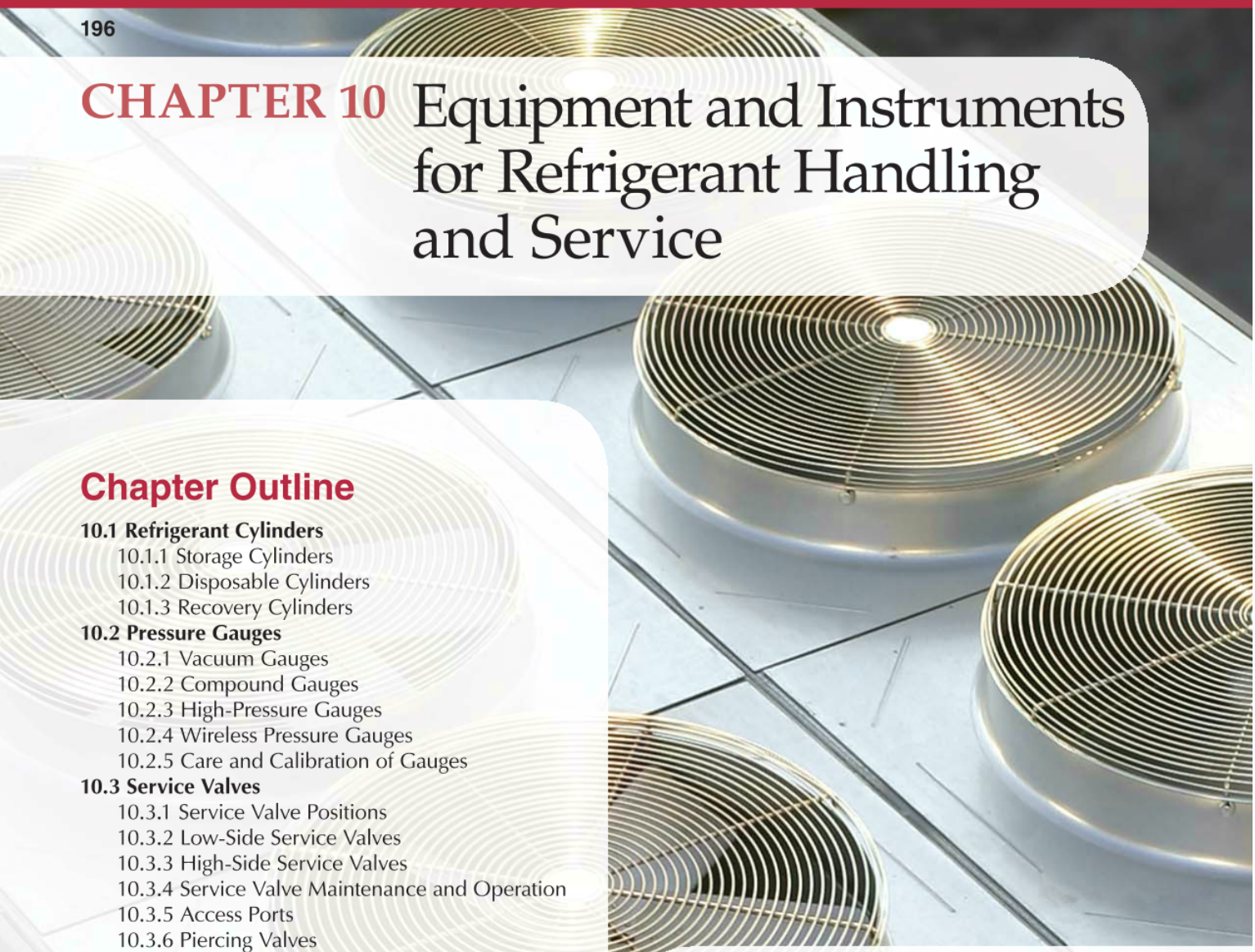

Chapter Outline

10.1 Refrigerant Cylinders
- 10.1.1 Storage Cylinders
- 10.1.2 Disposable Cylinders
- 10.1.3 Recovery Cylinders

10.2 Pressure Gauges
- 10.2.1 Vacuum Gauges
- 10.2.2 Compound Gauges
- 10.2.3 High-Pressure Gauges
- 10.2.4 Wireless Pressure Gauges
- 10.2.5 Care and Calibration of Gauges

10.3 Service Valves
- 10.3.1 Service Valve Positions
- 10.3.2 Low-Side Service Valves
- 10.3.3 High-Side Service Valves
- 10.3.4 Service Valve Maintenance and Operation
- 10.3.5 Access Ports
- 10.3.6 Piercing Valves

10.4 Gauge Manifolds
- 10.4.1 Gauge Manifold Construction
- 10.4.2 Purging Gauges and Hoses
- 10.4.3 Gauge Manifold Operation
- 10.4.4 Connecting a Gauge Manifold
- 10.4.5 Refrigeration System Analyzers

10.5 Leak Detection Devices
- 10.5.1 Bubble Solutions
- 10.5.2 Refrigerant Dye and Fluorescent Dye
- 10.5.3 Halide Torch Leak Detectors
- 10.5.4 Electronic Leak Detectors
- 10.5.5 Ultrasonic Leak Detectors

10.6 Vacuum Pumps
- 10.6.1 Types of Vacuum Pumps
- 10.6.2 Oil in Vacuum Pumps

10.7 Recovery, Recycling, and Reclaiming Equipment
- 10.7.1 Refrigerant Recovery Equipment
- 10.7.2 Refrigerant Recycling Equipment
- 10.7.3 Refrigerant Reclaiming Equipment
- 10.7.4 Digital Charging Scales

Learning Objectives

Information in this chapter will enable you to:

- Distinguish between the different types of refrigerant cylinders and identify the proper use of each type.
- Identify the different kinds of pressure gauges and how they are used.
- Recognize the various types of service valves used on refrigeration systems.
- Understand the purpose, construction, and operation of a gauge manifold.
- List the types of leak detection methods and their advantages and disadvantages.
- Explain the purpose for using a vacuum pump.
- Describe the types of equipment used for refrigerant recovery and recycling.

Technical Terms

access port
back seated
Bourdon tube
bubble solution
compound gauge
cracked open
digital charging scale
discharge service valve (DSV)
electronic leak detection
fluorescent dye leak detection
free air displacement
front seated
fusible plug
gauge manifold
halide torch leak detection
high-pressure gauge
king valve
liquid line service valve
liquid receiver service valve (LRSV)
micron
mid-position
piercing valve
pressure gauge
queen valve
reclaiming
recovering
recovery cylinder
recovery/recycling machine
recycling
refrigerant dye leak detection
refrigeration system analyzer
retarder
Schrader valve
service valve
storage cylinder
suction line service valve
suction service valve (SSV)
ultimate vacuum
ultrasonic leak detector
vacuum gauge
vacuum pump
valve core
valve core remover

Review of Key Concepts

Reviewing these concepts from earlier chapters will help you understand new concepts presented in this chapter:

- Pressure gauges are used by technicians to measure pressure conditions inside a refrigeration system. (Chapter 7)
- A service valve stem is opened and closed using a refrigeration service valve wrench. (Chapter 7)
- Purging is the process of removing unwanted air, vapors, dirt, and moisture from tubing or hoses by flushing them into the atmosphere with a compressed gas. (Chapter 8)
- The Clean Air Act requires technicians to recover refrigerant from a system and pull an adequate vacuum when opening equipment for maintenance. (Chapter 9)

4

Introduction

HVACR technicians must be certified by the EPA to handle refrigerants in cylinders and charge them into refrigeration systems. Refrigerants must be kept dry and clean. This means the refrigerant must be free from all contaminants, including air, dirt, and moisture. If a system's refrigerant circuit has been opened to the atmosphere to perform service procedures, a deep vacuum must be pulled on the system to remove moisture, air, and anything else that may have entered. This must be done after the system is reassembled, but before it is recharged with refrigerant. This chapter covers the specialized equipment used to handle refrigerants, perform refrigeration system service, and pull a vacuum. Methods for detecting refrigeration system leaks will also be covered later in the chapter.

Videos

- Safe Refrigerant Handling
- Connecting a Gauge Manifold
- Leak Detectors Leak Detectors

10.1 Refrigerant Cylinders

Refrigerant cylinders are made of steel or aluminum. Cylinders that have a diameter of 4 1/2″ (114 mm) or greater and a length of 12″ (305 mm) or more must have a pressure release protective device. This device can be a rupture disc (burst disc), a fusible plug, or a spring-operated relief valve, **Figure 10-1**.

A spring-operated relief valve opens under excessive pressure and then closes when enough refrigerant has been released from the cylinder to lower the pressure. Like relief valves, rupture discs are designed to open under excessive pressure, but they do *not* close again. Once a rupture disc opens, it allows a cylinder's entire refrigerant charge to escape. A ***fusible plug*** is a plug made of a metal with a low melting point, which melts and releases a cylinder's entire refrigerant charge if the cylinder begins to overheat. Refrigerant cylinders also have at least one valve at the top that provides a connection to access the refrigerant.

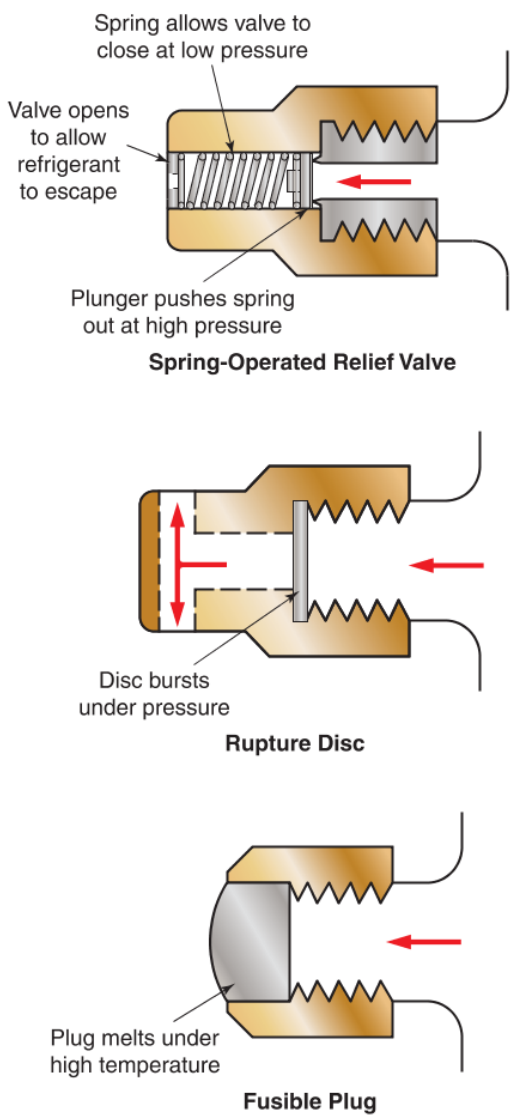

Goodheart-Willcox Publisher

Figure 10-1. Pressure release devices are designed to allow refrigerant to escape from a cylinder when the cylinder pressure or temperature is too high. Only spring-operated relief valves can close again.

Regulations for cylinders are prescribed by the Department of Transportation (DOT). If properly followed, these regulations ensure the safety of technicians working with cylinders containing refrigerants. The DOT regulations require that cylinders that have contained a corrosive refrigerant must be inspected and recertified every five years. Cylinders containing noncorrosive refrigerants must be inspected every ten years.

There are three main types of refrigerant cylinders that an HVACR technician uses:

- Storage cylinders.
- Disposable cylinders.
- Recovery cylinders.

10.1.1 Storage Cylinders

It is more cost effective to purchase refrigerants in 100-lb and 150-lb cylinders than to buy smaller cylinders. These large ***storage cylinders*** are used to charge refillable service cylinders at the shop. Often, the storage cylinders are positioned upside-down with the valve at the bottom to make filling a service cylinder easier and faster.

Safety Note

Moving Heavy Cylinders

Use a hand truck with the refrigerant cylinder secured with a chain to move cylinders weighing over 35 lb (16 kg).

Storage cylinders are fitted with a valve and a protective cap. Packing installed around the valve stem ensures that the valve is leak-proof where the valve stem enters the valve. The packing can be made of lead, graphite, or other materials. An adjustable packing nut holds the packing in place between the valve stem and valve body. The valve opening should be sealed with a plug when the cylinder is not in use. Whenever moving or shipping a cylinder, the protective cap must be screwed over the valve, **Figure 10-2**.

10.1.2 Disposable Cylinders

Disposable service cylinders are one of the most commonly used types of refrigerant container.

Copyright Goodheart-Willcox Co., Inc.

Worthington Cylinders

Figure 10-2. Refrigerant storage cylinder fitted with a protective cap.

Disposable cylinders are designed for one usage only. A service technician uses a disposable cylinder to charge refrigerant into a system. Many popular refrigerants are available in disposable cylinders, which contain smaller quantities of refrigerant than storage cylinders, from a few ounces up to 50 lb. Disposable cylinders should be stored at temperatures below 125°F (51°C) to prevent refrigerant pressure buildup, **Figure 10-3**.

Disposable service cylinders are easy to handle and eliminate the need to refill from a storage cylinder. The handle is designed to protect the valve if the cylinder is dropped. For disposable cylinders with only one valve, a technician will charge a system with vapor with the cylinder right-side up (valve on top) or with liquid with the cylinder upside-down (valve on the bottom). Since service calls often require technicians to carry a refrigerant cylinder and a tool bag, a carrying strap can free up your hands, **Figure 10-4**.

Prior to disposing of a disposable cylinder, all refrigerant must be recovered into an approved recovery cylinder. The disposable cylinder must be evacuated down to atmospheric pressure (15 psia or 100 kPa). The cylinder may then be disposed of or recycled. Many refrigerant supply stores offer recycling of used disposable cylinders.

4

Code Alert

Disposable Cylinder Usage

Disposable cylinders are not designed for recovery use and should never be used for this purpose. It is illegal to transport recovered refrigerant in a disposable cylinder. Do *not* use disposable cylinders to store refrigerant removed from a system.

10.1.3 Recovery Cylinders

Recovery cylinders are refrigerant cylinders specifically dedicated to storing refrigerant recovered from refrigeration systems. While other refrigerant cylinders are usually color coded by their type of refrigerant, recovery cylinders all look the same. Like other refrigerant cylinders, however, each recovery

Worthington Cylinders

Figure 10-3. Disposable refrigerant cylinders holding R-134a and R-404A. Disposable cylinders come in varying weights.

JugLugger

Figure 10-4. Refrigerant cylinder carrying straps provide convenience for service calls.

Copyright Goodheart-Willcox Co., Inc.

Manchester Tank

Figure 10-5. All recovery cylinders are painted gray and yellow to distinguish them from disposable cylinders. A recovery cylinder should be labeled to indicate the type of refrigerant inside and prevent the mixing of different refrigerants.

cylinder is dedicated to the use of only one type of refrigerant. These cylinders are easily recognized by their gray paint on the lower portion and yellow paint on the upper portion, **Figure 10-5**.

Recovery cylinders should be examined for dents and other damage prior to each use. Cylinders that are pressurized under 300 psig should be tested every ten years. Cylinders that are pressurized to over 300 psig should be serviced every five years. A test date is stamped on the cylinder.

Caution

Overfilled Cylinders

Never fill a recovery cylinder beyond its recommended capacity, which is stamped on the cylinder. The combined gas law states that in a fixed volume, such as a cylinder, a rise in temperature will cause a rise in pressure. Therefore, when ambient temperature around an overfilled cylinder rises, the pressure inside the cylinder also rises, which could burst an overfilled cylinder. Some tanks have a float valve that prevents overfilling the tank. Be careful not to assume that every cylinder has this feature.

Recovery cylinders have two valves: one marked *liquid* and one marked *gas* (or *vapor*). Gas (vapor) valves are usually blue. Liquid valves are usually red. The gas valve opens a passage between the gas inlet and the top of the cylinder. The liquid valve opens a passage between the liquid inlet and a tube that reaches to the bottom of the cylinder. This allows a technician to remove liquid refrigerant without having to turn the cylinder upside-down, **Figure 10-6**. Guidelines for recovering and recharging refrigerant using recovery cylinders are covered in Chapter 11, *Working with Refrigerants*.

Caution

Recovery Cylinder Valve Colors

Although most recovery cylinder valves are color coded, do not assume that blue always indicates a vapor valve and red a liquid valve. Always read the valve handles to identify the correct valve, **Figure 10-7**.

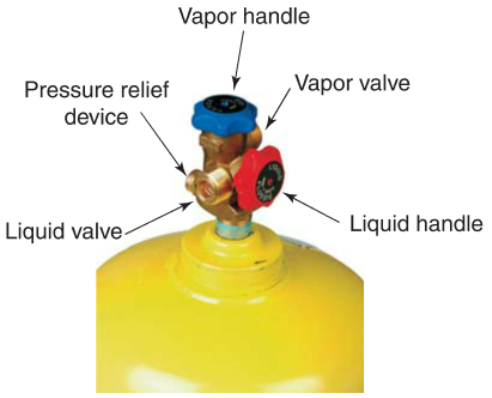

Manchester Tank

Figure 10-6. Recovery cylinders generally use blue for gas valves and red for liquid valves.

Dynatemp International, Inc.

Figure 10-7. Check cylinder handle color and labeling before use.

Copyright Goodheart-Willcox Co., Inc.

10.2 Pressure Gauges

Pressure gauges are instruments that measure and display the pressure of a fluid in a container. These are some of the most important instruments an HVACR technician uses. Pressure gauges provide valuable information about what is happening inside a refrigeration system.

There are several different types of pressure gauges that function using different principles of operation. Gauges are also available in a variety of ranges, as the pressures to be measured can vary from vacuum up to 800 psi (5,500 kPa).

One widely used operating element that pressure gauges use is the Bourdon tube. A ***Bourdon tube*** is a thin-walled tube of elastic metal bent into a circular shape that straightens as pressure inside it increases. One end of a Bourdon tube is sealed closed, while the other end is connected to a fitting that connects into a valve on a refrigeration system. With the sealed end connected to a linkage and a specially engineered gear with an indicator needle, a Bourdon tube's reaction to pressure indicates pressure on a given scale. As pressure rises, it begins to straighten the Bourdon tube, which moves the linkage, gear, and indicator needle across the gauge's scale, **Figure 10-8**.

Operating pressures vary in different types of refrigeration systems. Some pressure gauges use a built-in retarder with the Bourdon tube to measure readings at higher pressures. After the pressure has crossed a certain pressure threshold, a ***retarder*** engages an extra spring that correlates with the gauge's higher graduation markings. These gauges are easily recognized by the change in graduations at the higher readings of the positive pressure scale, **Figure 10-9**.

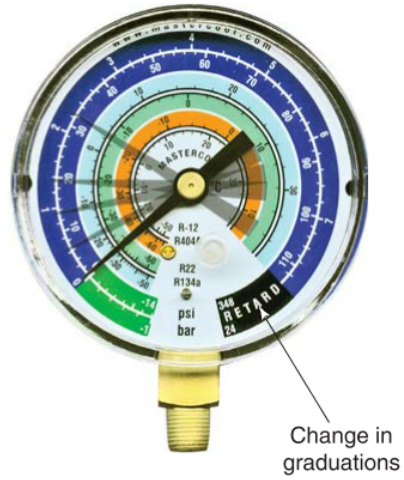

Mastercool Inc.

Figure 10-9. Notice how the *RETARD* portion of the pressure scale is different than the rest of the scale. Between 0 psi and 110 psi the scale increases by 10, but after 110 psi the scale jumps to 348 psi.

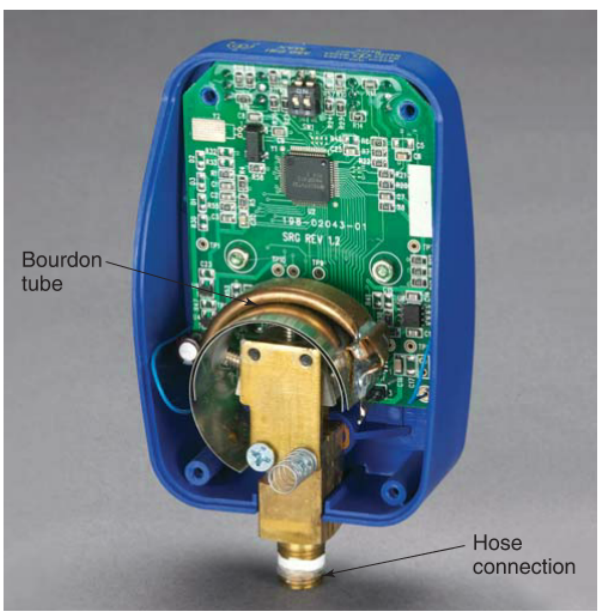

A

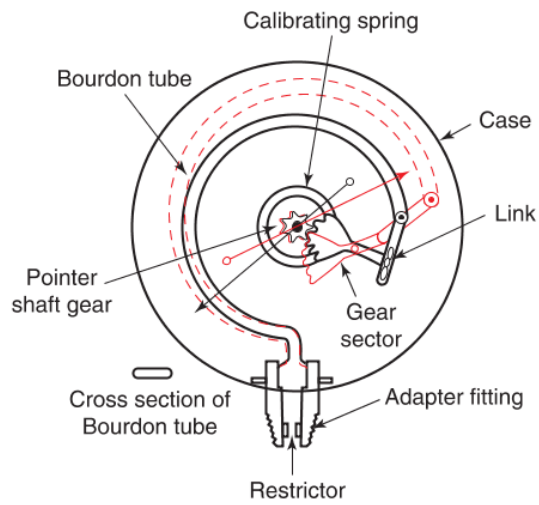

B

Ritchie Engineering Co., Inc. – YELLOW JACKET Products Division; Goodheart-Willcox Publisher

Figure 10-8. A—A Bourdon tube inside the back of a pressure gauge with an electronic display. B—Internal construction of a pressure gauge. The red, dashed outline indicates how an increase in pressure causes a Bourdon tube to straighten and operate the gauge.

Copyright Goodheart-Willcox Co., Inc.

Pro Tip

Protecting Threads on Gauges

Repeated installation and removal of a pressure gauge can quickly wear the gauge's threads. Use a pipe nipple on any heavily used gauges to protect the threads on the gauge. A pipe nipple is a short length of pipe that is threaded at each end. It allows a pressure gauge to be fastened to one end, while the other end is used to connect to service valves.

The three main types of pressure gauges used in HVACR service work are vacuum gauges, compound gauges, and high-pressure gauges. Each of these types of gauges has a different scale that varies depending on the refrigerant being measured:

- Vacuum gauge: 30 in. Hg vacuum through 0 in. Hg vacuum.
- Compound gauge: 30 in. Hg vacuum through 240 psi.
- High-pressure gauge: 0 psi through 800 psi.

Caution

Pressure Gauge Limitations

A pressure gauge should *not* be exposed to pressures that exceed its scale range. A gauge should also *not* be exposed to a pressure greater than 75% of the full-scale range for more than a few minutes.

10.2.1 Vacuum Gauges

A ***vacuum gauge*** measures lower-than-atmospheric pressure. Atmospheric pressure is 14.7 psi, which can also be expressed as 29.92 in. Hg or 760 torr. Digital vacuum gauges, like the one shown in **Figure 10-10**, can include the following scales: microns, psi, in. Hg, millibars, pascals, torr, and millitorr.

A ***micron*** is the equivalent of 0.001 mm Hg. To convert from SI vacuum measurements to US Customary, remember that one in. Hg is equal to 25.4 mm Hg or 25,400 microns. However, most compound and vacuum gauges measure pressure using *in. Hg vacuum*, which is the inverse of in. Hg (not followed by the word *vacuum*). In other words, atmospheric pressure is 29.92 in. Hg and 0 *in. Hg vacuum*, and a perfect vacuum is 0 in. Hg and 29.92 *in. Hg vacuum* (often rounded to 30 on compound pressure gauges).

In the micron scale, a perfect vacuum is 0 microns, and increasing pressure is represented by an increase in the measurement. Therefore, a measurement of 25,400 microns (the equivalent of 1 in. Hg or 28.92 in. Hg vacuum) is a higher pressure than 0 microns. Remember that in. Hg *vacuum* goes up numerically with increasing vacuum (lower pressure), and micron measurements go down with increasing vacuum (lower pressure). Become familiar with these scales and their relationships to vacuum and atmospheric pressure.

Sealed Unit Parts Co., Inc.

Figure 10-10. This digital vacuum gauge displays measurements on a digital screen in any one of six units: microns, in. Hg, millibars, pascals, torr, and millitorr.

A pressure drop lowers the boiling point (temperature) of a refrigerant. To force moisture inside a system to evaporate at room temperature, HVACR technicians use a vacuum pump to create a vacuum of about 250 microns inside the system. To measure such deep ("high") vacuum, a vacuum gauge must be used. A regular compound gauge cannot accurately measure deep vacuum.

Pro Tip

Moisture in a System

If a vacuum is drawn on a system and the vacuum gauge reading levels off at 5000 microns, ice or water is in the system. The location of the ice may be indicated by a cold spot, frost, or sweat on the outside of the system. Close the valves connecting the vacuum pump to the system, stop the pump, and allow the ice to melt or use heat from heat lamps, thermal blankets, or a heat gun to melt it.

Caution

High Pressure in Vacuum Gauges

Never allow system pressure to enter a vacuum gauge. Ice or water will damage the gauge.

Copyright Goodheart-Willcox Co., Inc.

Cleaning a Thermistor Vacuum Gauge

A thermistor vacuum gauge has two parts: a meter and a tube that connects to the refrigeration system, **Figure 10-11**. The tube sometimes collects vapors or oil. It can be cleaned by putting a solvent in the opening with an eyedropper. Clean as follows:

1. Fill the tube with cleaner.
2. Rock the tube gently.
3. Empty the tube.
4. Repeat Steps 1–3 two or three times.
5. Clean with an alcohol rinse.
6. Clean the instrument dial cover with soap, water, and facial tissues.

10.2.2 Compound Gauges

A ***compound gauge*** measures pressure above atmospheric and also vacuum. It is also known as a *low-side gauge*. It is *compound* because it measures both above and below atmospheric pressure. Most compound gauges are typically calibrated from 30 in. Hg vacuum to 0 in. Hg vacuum for below atmospheric pressure and from 0 psi to around 350 psi for above atmospheric pressure. They are accurate to about 1 psi or 2 in. Hg, **Figure 10-12**.

Robinair, SPX Corporation

Figure 10-11. A typical thermistor vacuum gauge, which can be used to measure the vacuum level of a system.

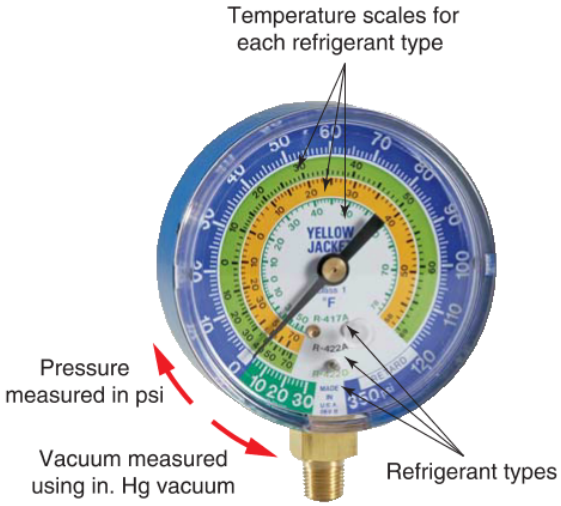

Ritchie Engineering Co., Inc. – YELLOW JACKET Products Division

Figure 10-12. This compound gauge has a scale of 0 to 30 in. Hg vacuum below atmospheric pressure and 0 psi to 350 psi above atmospheric pressure. The temperature scales for R-417A, R-422A, and R-422D are calibrated to show each refrigerant's evaporating temperature at any given pressure.

Some compound gauges include evaporating temperature scales that make it easy for the technician to determine the evaporating temperatures of different refrigerants at the measured pressure. The example in **Figure 10-12** shows the pressure levels and the corresponding evaporating temperatures for R-417A, R-422A, and R-422D. With these extra scales of corresponding temperature, it is unnecessary to refer to pressure-temperature (P/T) charts in order to determine the evaporating temperature of the refrigerant.

Pro Tip

Reading the Right Scale

Often, pressure gauges used in HVACR work are calibrated with evaporating temperature scales for more than one refrigerant. When reading a pressure gauge, care must be taken to read the correct scale spacing and values. Scales that are color coded, as in **Figure 10-12**, make it easier to follow the right scale.

Caution

High Pressure in Compound Gauges

Never use a compound gauge continuously on the high-pressure side of a system. Excessive pressure can damage the gauge or ruin its accuracy. In general, use the compound gauge on the low side of the system.

Copyright Goodheart-Willcox Co., Inc.

Ritchie Engineering Co., Inc. – YELLOW JACKET Products Division

Figure 10-13. The scale on this high-pressure gauge shows the corresponding temperatures for R-12, R-22, and R-502.

10.2.3 High-Pressure Gauges

A ***high-pressure gauge*** is a pressure gauge that can read high-pressure values on a single continuous scale, **Figure 10-13**. This scale may go as high as 800 psi. High-pressure gauges are also known as *high-side gauges*. A high-pressure gauge is usually connected into the high-pressure side of a system into the discharge service valve, liquid line service valve, or liquid receiver service valve.

Caution

Gauges for Specific Refrigerants

Some pressure gauges are specifically designed for use on certain systems or with certain refrigerants. While many gauges can be used for measuring most types of refrigerants, others are intended for only one refrigerant. Two special cases are ammonia systems and hydrocarbon (HC) systems. Ammonia can corrode copper if moisture is present, and hydrocarbons are flammable. To prevent damage, be mindful of any special gauges necessary for a job, **Figure 10-14**.

10.2.4 Wireless Pressure Gauges

HVACR instrument manufacturers have combined pressure transducers and wireless technology to produce wireless pressure gauges. These devices have the capability to send data to mobile devices for remote pressure sensing and easier records keeping. Installing one transducer on the high side and another on the low side allows technicians to read system pressure without using a gauge manifold. Some of these products also include temperature transducers to use when determining superheat and subcooling, **Figure 10-15**.

10.2.5 Care and Calibration of Gauges

A variety of things can damage gauges. A sudden release of high pressure (such as 300 psi) into a gauge can damage it. Rapidly fluctuating pressures

Ammonia Gauges

Isobutane Gauges

Ritchie Engineering Co., Inc. – YELLOW JACKET Products Division

Figure 10-14. Certain refrigerants require specially made gauges. Ammonia (R-717) and isobutane (R-600a) are two examples.

Copyright Goodheart-Willcox Co., Inc.

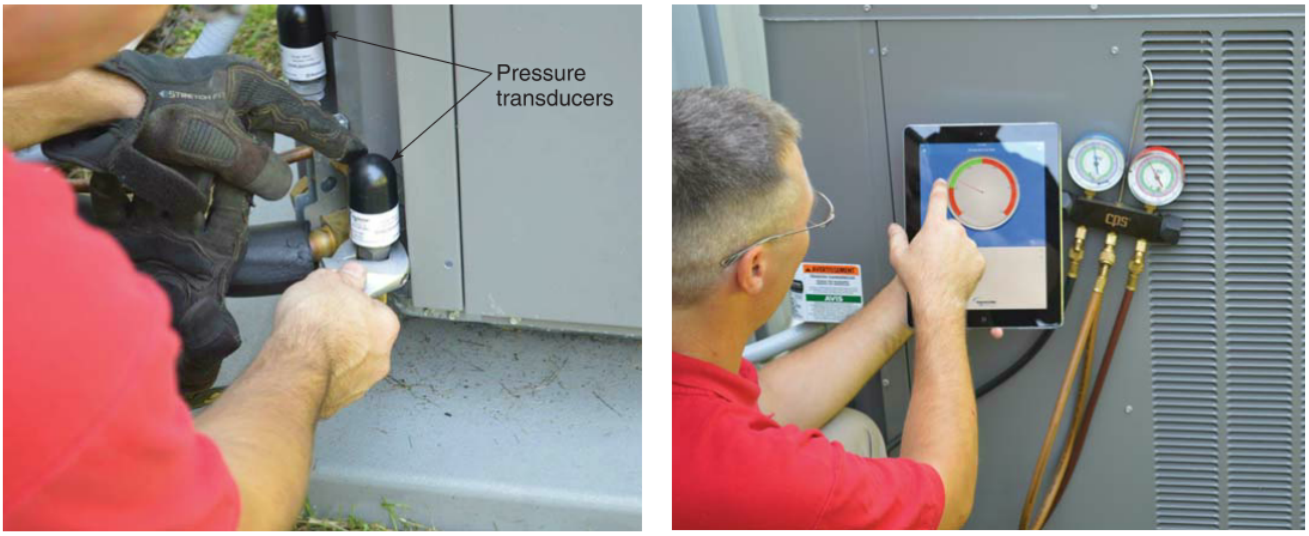

Permanent Transducers

Temporary Transducers

Transducers Direct, LLC.; Ritchie Engineering Co., Inc. – YELLOW JACKET Products Division

Figure 10-15. Some pressure gauges use transducers and wireless technology for remote sensing and electronic record keeping.

can quickly ruin a gauge's accuracy. Sometimes it is necessary to connect a gauge into a rapidly fluctuating pressure condition. If so, the gauge should be attached through a connector having a very small bore. This will help to dampen the pressure fluctuations entering the gauge. Some gauges are filled with liquid, which helps prevent rapid fluctuations in the instrument, **Figure 10-16**.

Gauges that are used in refrigeration work must be accurate and require periodic recalibration. When checking gauge accuracy, remember that calibrating equipment is made to show a 0 psi reading at sea level. A gauge calibrated on equipment adjusted for pressure at sea level will not be accurate either above or below sea level.

Gauges need to be recalibrated to read 0 psi for the elevation of the area where they will be used. To make this adjustment, disconnect the gauge so that it is open to the air. Then, set the indicator needle to 0. This is usually done by turning a calibration screw on the gauge. The table in **Figure 10-17** lists atmospheric pressure at several elevations.

Copyright Goodheart-Willcox Co., Inc.

TIF™ Instruments, Inc.

Figure 10-16. These gauges are filled with a liquid that dampens any fluctuations.

Atmospheric Pressure at Various Elevations	
Elevation	**Pressure**
Sea level	14.7 psia
2000 feet	13.7 psia
4000 feet	12.9 psia
5000 feet	12.2 psia

Goodheart-Willcox Publisher

Figure 10-17. Table showing how atmospheric pressure changes with altitude.

Caution

Absolute Pressure Gauges

Any gauge that reads absolute pressure (psia) should not be adjusted for elevation.

Pro Tip

Gauge Boots

To protect pressure gauges from falls or rough handling, equip them with protective boots. These covers fit over the gauge and provide a cushion against damage, **Figure 10-18**.

Ritchie Engineering Co., Inc. – YELLOW JACKET Products Division

Figure 10-18. Gauge boots for different pressure gauges.

10.3 Service Valves

A variety of valves are installed in a system to provide easy access to the system and ensure its continued smooth operation. These valves are used to monitor system pressure, recover refrigerant, charge the system, pull a vacuum, and other procedures. Some valves provide only basic access to the system. Others provide more control because they have multiple valve seat positions to open and close parts of the system for isolation.

A ***service valve*** is a valve with a wrench-operated, movable valve stem that blocks or opens passage through the valve. The service valve also blocks or opens a service port, which provides a connection to the refrigeration system for taking pressure readings and adding or removing refrigerant or lubricant, **Figure 10-19**.

Service valves enable technicians to seal off parts of the system while installing gauges or recharging or

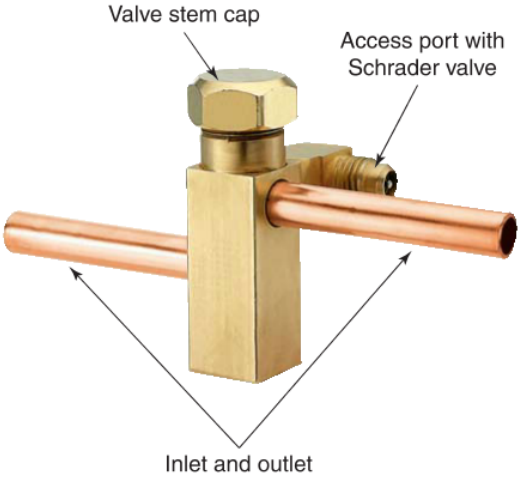

Courtesy of Sporlan Division – Parker Hannifin Corporation

Figure 10-19. This service valve would be mounted on the condensing unit of a split system.

Copyright Goodheart-Willcox Co., Inc.

evacuating the system. Service valves require using a refrigeration service valve wrench to turn the valve stem. This tool is discussed in Chapter 7, *Tools and Supplies*.

Service valve bodies are often made of drop-forged brass. Service valves must be leak-proof where the valve stem enters the valve. Similar to refrigerant cylinder valves, service valves have packing installed around their valve stems. The packing varies with different valve designs and can be made of lead, graphite, and other materials. An adjustable packing nut keeps the packing in place between the valve stem and valve body. Valve stems are made of steel or brass.

Pro Tip

Service Valve Packing Nut

Before changing a service valve's position, loosen the service valve packing nut one turn. Skipping this step could cause the valve to leak. Once you finish positioning a service valve for a procedure and before returning the system to regular service, tighten the packing nut.

Service valves generally fasten to tubing or pipe by flared or brazed connections. They may also be attached to system components, such as compressors or liquid receivers, either by pipe threads or bolted flanges.

10.3.1 Service Valve Positions

Service valves have four different valve positions: back seated, front seated, mid-position, and cracked open, **Figure 10-20**. If the valve stem is turned counterclockwise (outward) as far as possible, the valve is ***back seated***. When a service valve is back seated, it closes off its service port from the rest of the system, so no pressure readings or procedures can be performed. The back-seated valve position is used for normal system operation.

If the valve stem is turned clockwise (inward) as far as possible, the valve is ***front seated***. When a service valve is front seated, it blocks the flow of refrigerant through the valve by closing off its regular passageway. Front seating a service valve provides a passage between part of the refrigeration system and the service port. However, the part of the refrigeration system to which the service port connects may be different for each type of service valve.

When the valve stem is turned so that the valve is not against either seat but midway between the front and back, the service valve is in ***mid-position***. This is usually done by beginning with the valve in the back-seated position and turning the valve stem two complete clockwise rotations. This position accomplishes two objectives: it allows refrigerant to continue flowing,

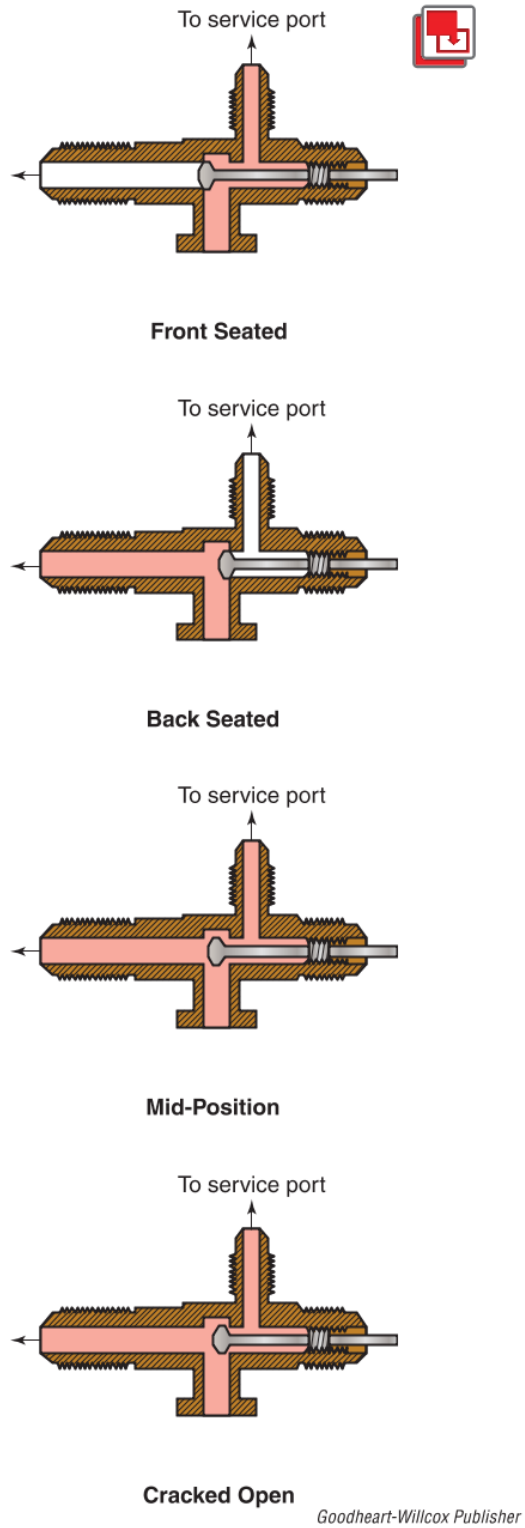

Goodheart-Willcox Publisher

Figure 10-20. The four valve stem positions of a service valve: front seated, back seated, mid-position, and cracked open.

Copyright Goodheart-Willcox Co., Inc.

and it provides a connection between the rest of the system and the service port. This may be done for certain procedures. For a simple pressure reading, the service valve is usually just cracked open.

The cracked-open position is similar to the mid-position. It allows refrigerant to continue flowing while providing a connection between the rest of the system and the service port. A service valve is ***cracked open*** when the valve stem has been turned just enough to lift the valve off the back-seated position. Cracking open a service valve begins by having the valve in a back-seated position. Rotate the service valve stem 1/16 to 1/8 of a turn clockwise.

Caution

Opening Service Valves

It is good practice to crack open a valve (opening it 1/16 or 1/8 turn) before opening it fully. Cracking open a valve prevents a shock pressure rush, which could damage gauge mechanisms or injure the technician.

10.3.2 Low-Side Service Valves

Low-side service valves are service valves found on the low side of an HVACR system. Generally, the various types of low-side service valves perform the same function. There may be some variations in procedures depending on the location of a low-side service valve.

A ***suction line service valve*** is a low-side service valve connected to a refrigeration system's suction line. In many cases, a suction line service valve is located much closer to the compressor's inlet than to the evaporator. These are often found on the condensing unit of a split system. During normal system operation, cool low-pressure vapor refrigerant flows through this valve.

A ***suction service valve (SSV)*** is a low-side service valve that connects to the suction line and directly onto the compressor at its inlet. Valve caps protect the service port and valve stem when the valve is not in use. Be sure to keep the caps tightly fixed on both the valve stem and service port when they are not in use. A suction service valve is considered a compressor service valve because it is one of the two service valves connected directly onto the compressor, **Figure 10-21**.

When a suction service valve is front seated, the suction line's passage into the valve is blocked; however, a passageway between the service port and the valve outlet into the compressor exists. By front seating a suction service valve, a technician can remove that suction service valve from the compressor, while leaving the suction line sealed. See **Figure 10-22**. By following this small part of a larger procedure, a technician can prepare to replace a compressor without having to recover the entire refrigerant from the system.

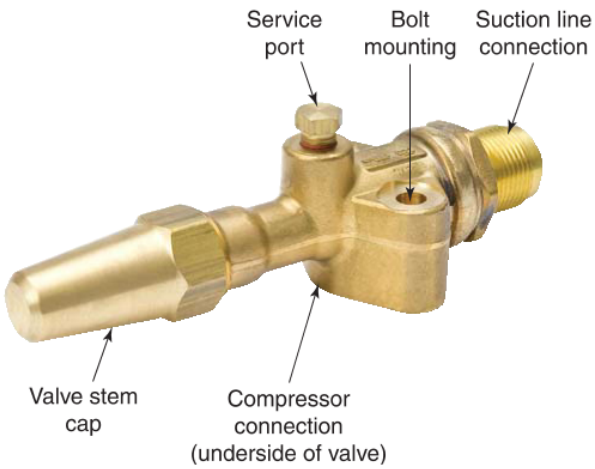

Mueller Industries, Inc.

Figure 10-21. This service valve would be mounted directly onto a compressor.

When a low-side service valve is in a back-seated position, a technician can turn the stem once or twice

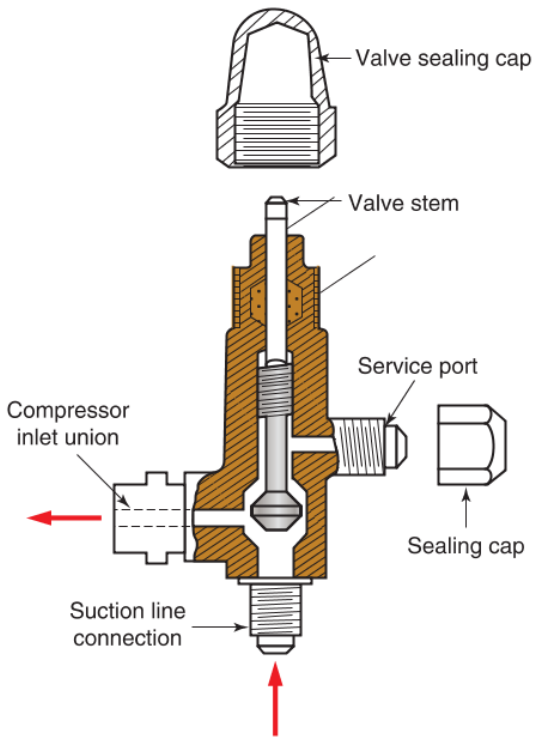

Goodheart-Willcox Publisher

Figure 10-22. Note that front seating a suction service valve would block the suction line passage, and back seating the valve would block the service port passage.

Copyright Goodheart-Willcox Co., Inc.

to mid-position the valve. In this position, all three valve passageways are open. Mid-position is used for system evacuation or standing pressure tests. When a low-side service valve is cracked open only slightly off the back-seated position, a technician can take low-side pressure readings with a compound gauge during normal system operation. During normal system operation, cool low-pressure vapor refrigerant flows through this valve.

10.3.3 High-Side Service Valves

High-side service valves are found on the high side of a refrigeration system. The function these valves perform varies, depending on the location. Some large refrigeration systems may be equipped with extra service valves that other systems do not have. These other valves may be used for servicing and installation purposes.

A ***discharge service valve (DSV)*** is a high-side service valve that is mounted at a compressor's discharge port, providing a shutoff between the compressor and the condenser. It also provides a service port for a high-pressure gauge or a gauge manifold, **Figure 10-23**.

A discharge service valve has the same four positions as a suction service valve. When the valve is front seated, the passage out of the valve into the discharge line and condenser is blocked, leaving the valve inlet from the compressor and service port isolated. Front seating a discharge service valve allows the valve to be disconnected from the compressor without refrigerant escaping from the condenser. During normal system operation, hot, high-pressure refrigerant vapor flows through this valve.

When a discharge service valve is back seated, the valve is positioned for normal system operation and the service port for a gauge is blocked. Cracking open a discharge service valve allows for pressure readings during normal system operation. Mid-positioning is used for system evacuation or standing pressure tests.

Along with suction service valves, discharge service valves are a type of compressor service valve. They are not used on all refrigeration systems. Some systems have a service valve between the condenser and the liquid line.

A ***liquid line service valve*** is a high-side service valve located in a refrigeration system's condenser and liquid line. In many cases, a liquid line service valve is located much closer to the condenser's outlet than to the metering device. These service valves are often found on the condensing unit of a split system. During normal system operation, warm high-pressure liquid refrigerant flows through this valve.

A ***liquid receiver service valve (LRSV)*** is a high-side service valve connected to the outlet of a liquid receiver and the inlet of a liquid line, **Figure 10-24**. Often, these valves are three-way valves, like suction service valves and discharge service valves. These valves enable the technician to charge liquid refrigerant into the system.

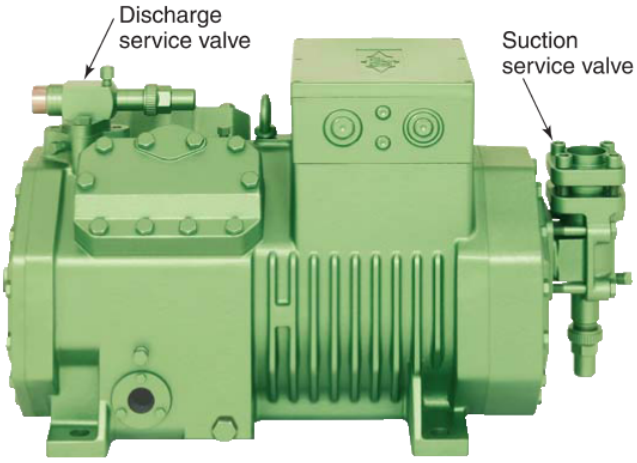

Bitzer

Figure 10-23. This semihermetic reciprocating compressor has a suction service valve (SSV) and a discharge service valve (DSV). The suction valve has the larger connection for the suction line, while the discharge line is smaller. This clearly shows the result of the compression of the refrigerant.

Westermeyer Industries, Inc.

Figure 10-24. This liquid receiver service valve is installed between the liquid receiver and liquid line, making it a king valve.

Copyright Goodheart-Willcox Co., Inc.

Pro Tip

LRSV Names

In a diverse field like HVACR, a single part or component can have several different names. On the job, you may hear someone call a liquid receiver service valve a ***king valve*** or a *receiver outlet valve*. Another service valve is the ***queen valve***, which is installed between the condenser and the liquid receiver inlet. King and queen valves are useful when pumping down systems for component isolation.

When a liquid receiver service valve is front seated, the passageway between the liquid receiver outlet through the valve to the liquid line inlet is blocked. This isolates the liquid receiver and service port from the liquid line. A technician front seats a liquid receiver service valve when pumping down the system. For normal operation, a liquid receiver service valve is back seated, so the passage between the liquid receiver and the liquid line is open, but the service port is blocked from the system.

10.3.4 Service Valve Maintenance and Operation

Most service valves have a brass body and a steel stem. Stems have a tendency to rust and score the valve gland or packing. Always clean and oil a valve stem before turning it. A scarred or dirty valve stem will ruin the valve packing. Valve stem rusting can be reduced by drying the valve body and then coating it with refrigeration lubricant before replacing the valve stem cap and service port plug or cap. This should be done before and after each time a service valve is used. Use lubricant specified for the refrigerant in that system.

Service valves must be kept in good condition. Three things can be done to maintain good operation and extend valve life:

- Match the correct service valve wrench size to the valve stem to prevent stripping of the valve stem head.
- Maintain the packing so that the service valve will not leak.
- Oil the threads of the service port each time gauges are used.

Occasionally, after a period of use, service valves must be repaired or replaced. Pipe threads in the valve gauge openings may become worn and leak. This results from frequent mounting of flexible line fittings. If a service valve is being repaired, the proper packing must be used. If a service valve is beyond repair, recover the refrigerant from the system, or isolate it in another part of the system, and replace the valve.

Safety Note

Valve Cracking Tip

When cracking open a stuck valve, always use a fixed wrench rather than a ratchet wrench. This is done so the valve can be quickly closed again if a leak or breakage occurs.

Caution

Avoiding Valve Seat Freezing

Sometimes valves can stick shut because of expansion and contraction due to temperature differences within the valve. This condition is sometimes referred to as "freezing." After back seating a valve, turn it just enough to relieve some of the pressure on the seat, but not enough to open the valve. This provides just enough clearance between the valve and its seat to prevent it from getting jammed into its seat if the valve body contracts. If the valve gets jammed into its seat, the valve stem could break when the technician attempts to operate the valve.

When using a service valve wrench on service valves, apply the turning force gradually. Adjustable end or fixed open end wrenches are not recommended for service valve stems. When installing a service port plug or cap, tighten the plug firmly. Never tighten a cold service port plug into a hot service valve. When the valve cools off, it will shrink. This could cause the plug to be fitted so tightly that it cannot be easily removed.

Loosening a Stuck Service Port Plug

If a service port plug is stuck in a service valve, use the following procedure to loosen it.

1. Heat the outside of the service valve body with a flame from a torch. Be careful not to overheat the valve. It should not glow. The heat will cause the valve body to expand. As a result, it will weaken the valve body's thread grip on the plug.
2. Use a wrench to gently turn and loosen the plug.

10.3.5 Access Ports

As previously described, service valves are equipped with service ports. However, there are various parts of

Copyright Goodheart-Willcox Co., Inc.

a refrigeration system where a technician must access the system to measure pressure without stopping the flow of refrigerant or completely opening the system. Such areas are good places to install access ports. An access port provides just the port, without an accompanying service valve.

A refrigeration system ***access port*** is a small valve opening that usually contains a Schrader valve core and is used for checking pressure and servicing a system. Access ports are installed in systems where the need for more convenient service outweighs the advantage of having a minimum number of connections. Access ports are often installed at an evaporator outlet or a liquid line inlet. They are typically placed just ahead (downstream) of the metering device and on both sides of automatic valves in the system. Access ports may be installed adjacent to metering valves, solenoid valves, bypass valves, hot gas defrosting valves, and driers.

Often, access ports are equipped with Schrader valves. A ***Schrader valve*** consists of an externally threaded, hollow tube with a spring-loaded, coaxially centered pin that blocks access through the tube, **Figure 10-25**. The tube can be opened by depressing the pin against the spring pressure. Hose connectors often include a pin that pushes open the Schrader valve as the connector is being tightened into place. Once the connector is removed, the spring pushes the Schrader valve's pin back into the closed position, minimizing the amount of refrigerant lost from the system. Schrader valves are the type of valves used in automobile tires.

Having external threads allows Schrader valves to be used as ***valve cores*** inside access ports, **Figure 10-26**. While a valve core works fine for pressure measurement and regular maintenance, a valve core can be removed from an access port for certain procedures, such as pulling a vacuum. Technicians use a ***valve core remover*** that mounts on the access port, **Figure 10-27**. The tool has a long stem to remove the Schrader valve core for charging or evacuating a system. This tool allows removal of the Schrader valve core from the access port without losing charge or vacuum. The core is removed to allow maximum flow of vapor.

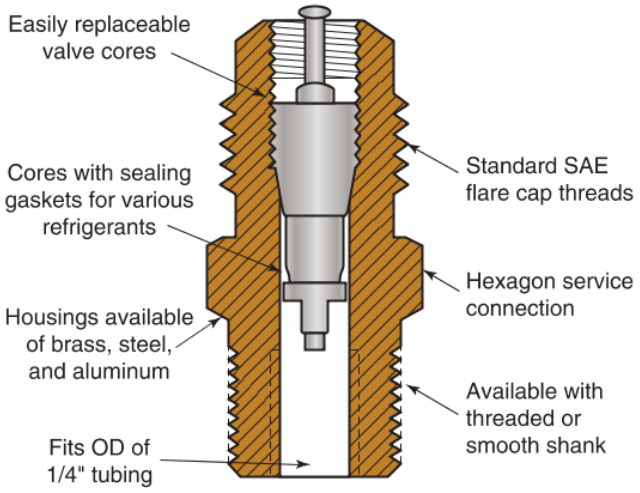

Goodheart-Willcox Publisher

Figure 10-25. A Schrader valve fitting can be used to connect pressure gauges and service lines to a system. When a service line or gauge is mounted on this fitting, a pin depresses (forces inward) the stem of the valve core. This is the final action that opens the system for service.

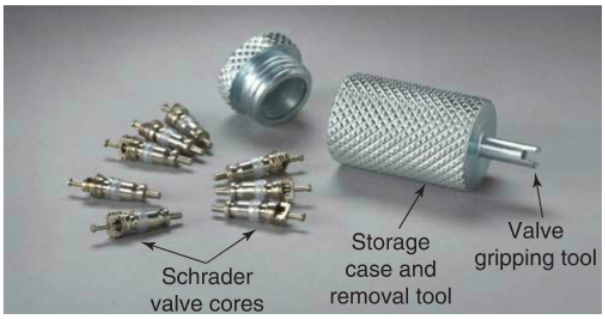

Ritchie Engineering Co., Inc. – YELLOW JACKET Products Division

Figure 10-26. Schrader valve cores can be stored inside this valve core removal tool. This removal tool is only for use after the refrigerant from a system has been recovered and the system is opened for service.

10.3.6 Piercing Valves

The most common method used to gain access to small hermetic systems or those without access ports is to use piercing valves. A ***piercing valve*** is a valve that is secured to a length of tubing and accesses the refrigeration system by piercing through the tubing. Piercing valves may be mounted on the suction tubing, discharge tubing, or both. Many designs of tubing-mounted piercing valves have been developed; however, there are two general designs: bolted on and brazed on. These valves are available in several sizes for various tubing sizes.

Brazed-on piercing valves seldom leak, but they do require refrigerant removal prior to brazing. Bolted-on piercing valves do not require refrigerant removal prior to installation, but their seal may leak over time in systems with large vibrations. Bolted-on piercing valves should be used as temporary access to the system. They should be replaced with brazed-on piercing valves or the addition of a brazed-on process tube valve.

Copyright Goodheart-Willcox Co., Inc.

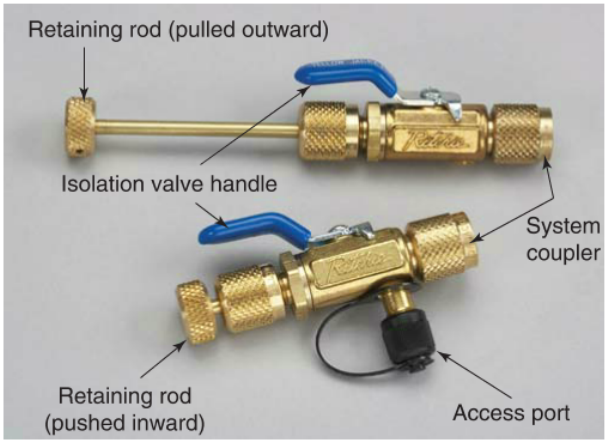

Ritchie Engineering Co., Inc. – YELLOW JACKET Products Division

Figure 10-27. Each valve core remover is shown in a different position. The upper tool has the retaining rod pulled outward, as if a valve core has already been extracted from a system. The lower tool shows the retaining rod pushed inward, as if a new valve core has been installed in a system.

Bolted-On Piercing Valves

Bolted-on piercing valve designs fall into two subcategories based on their sealing method. **Figure 10-28** shows cross sections of these two subcategories of bolted-on piercing valves. The system should be shut off and de-energized when installing a bolted-on piercing valve. The rubber or nylon seal should be clean and the tubing should be straight and clean.

Piercing valves must be selected for the correct diameter tubing. **Figure 10-29** shows a piercing valve with an insert that can be changed to accommodate different tubing diameters.

Sealed Unit Parts Co., Inc.

Figure 10-29. A bolted-on, saddle-type piercing valve is shown here. Note the plastic insert, which can be interchanged to accommodate different tubing diameters.

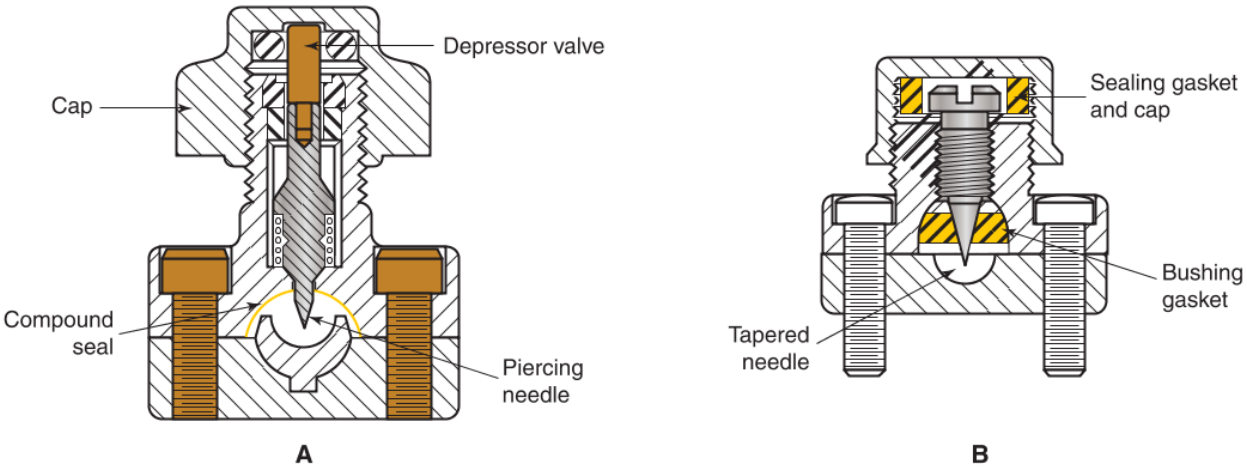

Goodheart-Willcox Publisher

Figure 10-28. These cross sections show two types of bolted-on piercing valves. A—This type of bolted-on valve is bolted to the line by two socket head cap screws. Note the use of a special compound seal. B—In this bolted-on piercing valve, a gasket seals the hole made by the tapered needle.

Copyright Goodheart-Willcox Co., Inc.

Installing a Bolted-On Piercing Valve

1. With the size of the piercing valve in mind, check to see if there is enough space around the tubing to install and operate the piercing valve. Check also to determine if a service hose can be easily attached where the piercing valve will be placed.
2. Make sure that the part of the tubing where you intend to install the piercing valve runs in a straight line and is round without any dents or irregularities.
3. Clean the tubing area with a fine emery cloth or fine sandpaper. Be careful not to scratch the tubing while cleaning. Wipe the tubing with a clean cloth to remove any dust.
4. Back out the valve's piercing needle by rotating the stem counterclockwise as far as it will go.
5. Dab a little clean refrigeration lubricant (the same type of lubricant used in the system) on the tubing.
6. While holding the sealing washer steady to be sure that it stays in place, mount the valve on the tubing. Secure the valve body to the tubing by tightening the screws evenly and snugly.
7. Once the valve body is firmly clamped to the tubing, attach the service hose and rotate the piercing valve stem clockwise into the tubing. It will be easier to tighten when the needle pierces the tubing.
8. Back off the piercing needle slightly by turning the stem counterclockwise in order to access the system.
9. Test for leaks to make sure the seal between the piercing valve and tubing is airtight.

Brazed-On Piercing Valves

A brazed-on piercing valve is used when there is good access to an area of straight tubing on a system to braze in the fitting. Refrigeration systems should be evacuated before a brazed-on piercing valve is installed. The valve core should be removed from the valve to prevent damage to the seals during brazing. Make certain there are no flammables or soft-soldered joints close to the area being brazed.

Installing a Brazed-On Piercing Valve

1. With the size of the piercing valve in mind, check to see if there is enough space around the tubing to install and operate the piercing valve. Check also to determine if a service hose can be easily attached where the piercing valve will be placed.
2. Make sure that the part of the tubing where you intend to install the piercing valve runs in a straight line and is round without any dents or irregularities.
3. Clean both the saddle and tubing mating surface with clean sandpaper or clean steel wool. Wipe both the saddle and the tubing with a clean cloth to remove any dust.
4. Remove the piercing valve stem and the gasket from the saddle.
5. Brazing requires flux or flux-coated filler rod. If using a flux-coated filler rod, mount the saddle on the tubing. If not using a flux-coated filler rod, apply clean, fresh brazing flux on the saddle according to the valve manufacturer's directions. Then mount the saddle on the tubing. The saddle must not move or shift during the brazing or while the brazed joint is cooling. Some technicians hold the saddle in place with a small C-clamp during the brazing operation.
6. Check to see if there is enough room for using the valve in its present location. If there is not enough room, find a more suitable location with better clearance.
7. Using a torch, heat both the tubing and saddle until the filler rod material flows around the saddle. Do not overheat the tubing or it may be weakened to the point of failure and burst.
8. When you have finished brazing the joint, inspect it carefully. Use a mirror to check hard-to-see edges.
9. After the brazed joint has cooled, install the piercing needle and gasket. Many piercing valve caps have O-rings. These seal the system. O-rings must be in place before installing the cap to ensure a proper seal. Caps with a metal-to-metal seal must be tightened one-eighth of a turn with a wrench after being finger tightened.
10. Attach the service hose and then back off the piercing valve stem slightly to access the system.
11. Test for leaks to make sure the seal between the piercing valve and tubing is airtight.

Copyright Goodheart-Willcox Co., Inc.

Other Types of Piercing Valves

Tube-piercing pliers are useful for attaching a piercing valve. This tool is similar to using a pair of locking jaw pliers to insert the piercing valve into the tubing, **Figure 10-30**. Tube-piercing pliers are used to quickly gain temporary access to a system and to recover refrigerant from a system prior to the unit being disposed. Temporary piercing valves should be removed from the system and replaced with a permanent brazed-on fitting. Either a brazed-on piercing valve is used or a tee is inserted. To insert a tee, the section of tubing where the piercing valve was inserted is replaced with a new section of tubing that includes a tee for installation of a Schrader valve.

10.4 Gauge Manifolds

A ***gauge manifold*** consists of a compound (low-side) gauge, a high-pressure (high-side) gauge, at least three ports that may be isolated from each other, and at least two hand valves. A gauge manifold allows a service technician to check the operating pressures of both the low side and high side simultaneously, to add or recover refrigerant, to add oil, to bypass the compressor, and to perform many other service operations, **Figure 10-31**.

Manufacturers often color code the exterior of the gauges and hoses: blue for the low side and red for the high side. The compound gauge is mounted on the left side of the manifold. Its blue hose on the left side connects to the low side of the system through a suction service valve or other low-side service valve. A hand valve on the left side of the gauge manifold separates the compound gauge from the manifold's central chamber.

A central chamber is located between the low and high sides of a gauge manifold. A yellow hose connecting to the center port is connected to a refrigerant cylinder, a recovery machine, or a vacuum pump. Some gauge manifold central chambers have a sight glass that can be used to view the flow of liquid through the central chamber. This can be used when charging or recovering liquid refrigerant.

DiversiTech Corporation

Figure 10-30. Tube-piercing pliers for temporary access to a system with no service valves.

A high-pressure gauge is mounted on the right side of the manifold. Its red hose connects to the high side of the system through the discharge service valve, liquid line service valve, or liquid receiver service valve. A hand valve on the right side of the gauge manifold separates the high-pressure gauge from the central chamber.

Not all gauge manifolds have mechanical gauges. Some have digital gauges. Such gauges often have additional features, such as a thermocouple temperature clamp or computer software. Digital gauges are useful as they are capable of being programmed to be used with many different refrigerants and can display saturation temperatures and pressures in different units, **Figure 10-32**.

10.4.1 Gauge Manifold Construction

Figure 10-33 shows the internal construction of a gauge manifold. The rubber O-rings prevent refrigerant from leaking out around the valve stem. When the valve is turned counterclockwise, the valve plug

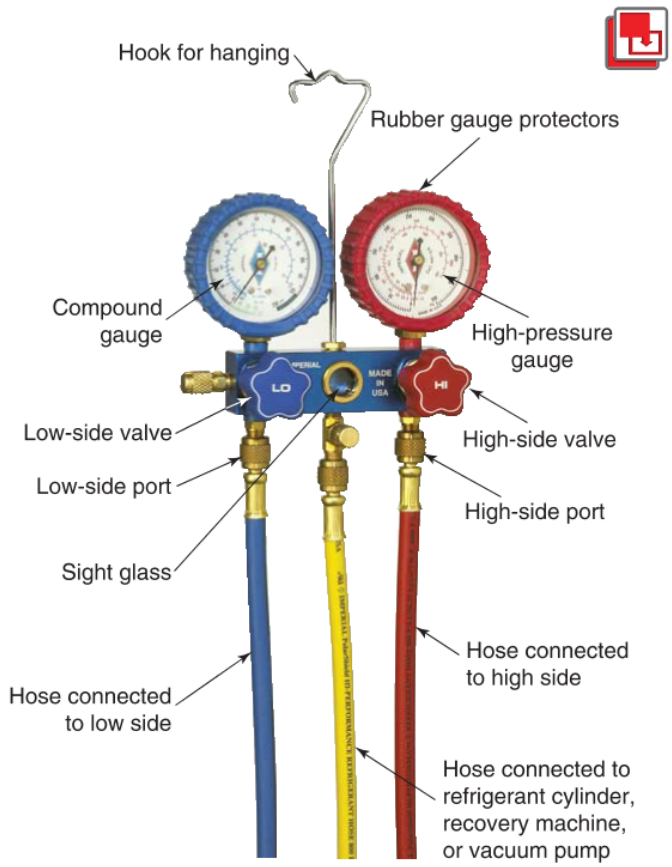

Imperial

Figure 10-31. Gauge manifolds are often color coded, using blue for low pressure and red for high pressure.

Copyright Goodheart-Willcox Co., Inc.

moves outward from the seat, opening a passage to the center port from one of the side ports. When the handle is turned clockwise, the plug moves toward the seat, sealing the side port from the center port.

10.4.2 Purging Gauges and Hoses

In the event that the hoses become contaminated with debris or if there is moisture in the system, purging may be necessary. Purging refers to the process of removing unwanted vapors, dirt, or moisture from the refrigerant hoses that connect the gauge manifold to the refrigeration system and releasing the contents into the atmosphere. Since purging of refrigerant hoses uses refrigerant as the purging agent, this process should be performed to use as little refrigerant as possible to reduce the impact on the environment. The use of quick-connect fittings greatly reduces the

Mastercool Inc.; Stride Tool Inc.

Figure 10-32. Digital gauge manifolds and wireless gauge manifolds provide tools for monitoring the system and collecting data.

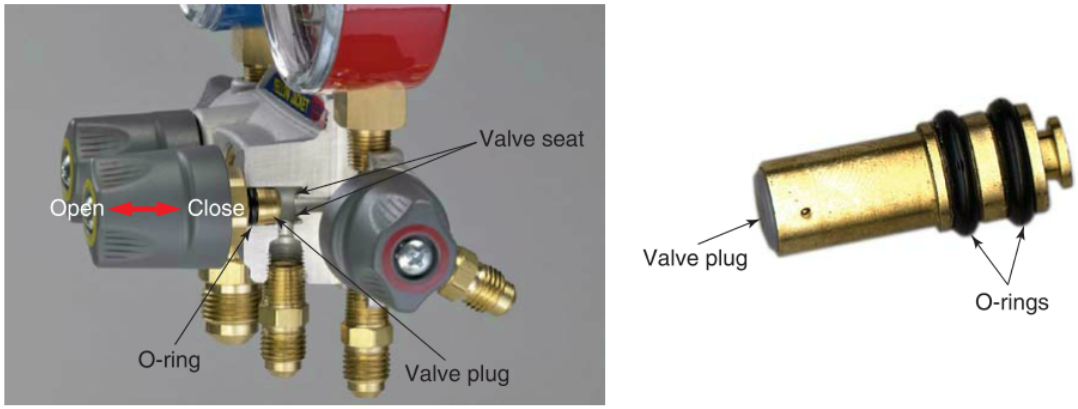

A B

Ritchie Engineering Co., Inc. – YELLOW JACKET Products Division

Figure 10-33. A—This cutaway shows the internal construction of a gauge manifold high-side valve. B—This replacement valve shows the valve plug and O-rings used in a typical gauge manifold.

Copyright Goodheart-Willcox Co., Inc.

amount of refrigerant released to the atmosphere during service. Quick-connect fittings are spring-loaded, brass fittings which seal off refrigerant inside each hose. Older gauge sets can be retrofitted with quick-connect fittings. **Figure 10-34** shows typical quick-connect hose fittings.

Purging a Gauge Manifold and Hoses

Refer to the diagram in **Figure 10-35** throughout this procedure.

1. To purge the gauge manifold and refrigerant service lines, begin by making sure that the cylinder valve, the gauge manifold valves, and the system service valves are closed. Service valves should be back seated to ensure they are completely closed.
2. Connect the center service line of the gauge manifold to a refrigerant cylinder containing the same refrigerant used in the system.
3. Remove the caps from the system service ports and loosely connect the gauge manifold's low-side and high-side service lines for purging.
4. Open the low-side and high-side valves on the gauge manifold.
5. Briefly crack open the cylinder valve on the refrigerant tank to flush the gauge manifold and service lines with refrigerant. Any moisture and air should be forced out of the loose connections at the service ports. A small amount of refrigerant will also escape.
6. Close the cylinder valve and tighten the service line fittings at the service ports. The service valves can now be opened without fear of contaminating the system.

Code Alert

Venting Refrigerants

Although it is illegal to knowingly vent refrigerant into the atmosphere, the EPA allows technicians to release small amounts of refrigerants during recovery, repair, purging, and charging. As a result, the small amount of refrigerant released while purging gauge manifold hoses is not a violation of the Clean Air Act.

10.4.3 Gauge Manifold Operation

Operation of a gauge manifold consists of opening and closing the high-side and low-side valve handles. Valve positions for some common uses of a gauge manifold are explained below. To speed the installation of hoses, quick-connect fittings can be used.

Ritchie Engineering Co., Inc. – YELLOW JACKET Products Division

Figure 10-34. Quick-connect fittings and couplers are available in a variety of styles.

Figure 10-36 shows the valve positions used when connecting a gauge manifold to a refrigeration system to perform various service operations. To measure a system's operating pressures, keep both manifold valves closed to allow refrigerant to flow to each pressure gauge. With both valves open, the gauge manifold can be used for system evacuation, which is done after the refrigerant in a system has been recovered. A vacuum pump is connected to the center port of the manifold, and any vapor in the system flows through the open valves and into the center hose leading to the pump. To use the gauge manifold for charging refrigerant, keep one valve open and the other closed, depending on which side is being charged. This allows refrigerant to flow from the refrigerant cylinder, through the central chamber, and into the side of the gauge that corresponds to the side of the system being charged.

10.4.4 Connecting a Gauge Manifold

The procedure for connecting gauges to a system depends on the system design. It is different for each system, as shown in **Figure 10-37**.

- Some systems have both a suction service valve and a discharge service valve.
- Some have a suction service valve adapter mounted on the compressor.
- Some do not have any service valves, but do have a process tube.

Copyright Goodheart-Willcox Co., Inc.

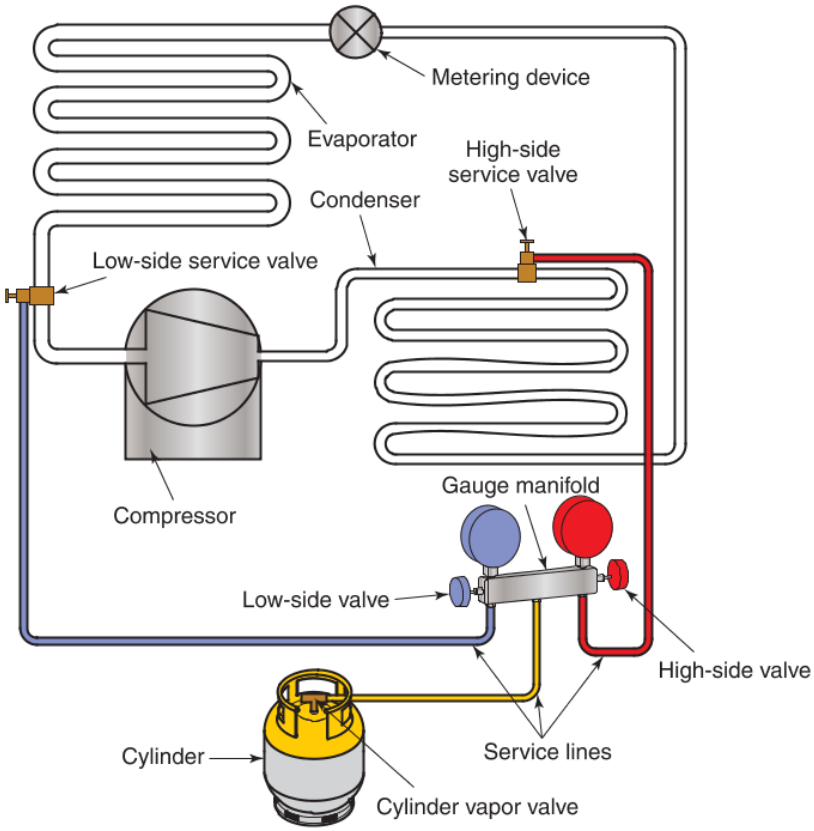

Goodheart-Willcox Publisher

Figure 10-35. To purge the gauge manifold and service lines, the hose connections at the service ports are loosened, the cylinder valve is opened, and the hand valves on the gauge manifold are briefly opened. The fittings at the service ports are then tightened.

- Some have a process tube that is too short or inaccessible. In such systems, piercing valves are used. Piercing valves can be installed on the liquid line, on the suction line, or on each line.

Attaching gauges to a system with two service valves, like the one in **Figure 10-37A**, is the easiest. The service hoses from the gauges simply screw onto the service ports. This arrangement, which is most common on commercial systems, permits checking both the low-side pressure and the high-side pressure. Other common valve attachments for gauge manifolds include the valve adapter in **Figure 10-37B** and the piercing valve in **Figure 10-37D**. To access a system with a process tube, **Figure 10-37C**, a technician can use either a piercing valve or a process tube adapter to connect the gauge manifold.

10.4.5 Refrigeration System Analyzers

Instrument manufacturers can combine a gauge manifold, temperature sensors, and other sensing elements into one package that includes digital connectivity and often some troubleshooting capabilities. These instruments are ***refrigeration system analyzers***, **Figure 10-38**.

Refrigeration system analyzers are used to measure system variables, such as pressures and temperatures, and help to determine whether operation is optimal. Measurements for subcooling and superheat can indicate whether the system's refrigerant charge is correct. Datalogging capabilities allow a technician to track a system's operation over a period of time. This information can be displayed on a graph to show operational trends. Some analyzers include software that is able to compute the measured numbers in order to make suggestions or offer troubleshooting diagnoses, **Figure 10-39**.

10.5 Leak Detection Devices

Refrigeration system leaks are usually very tiny, so they require sensitive detecting devices. Some commonly used devices include bubble solutions, fluorescent dyes, refrigerant dyes, halide torches, electronic detectors, and ultrasonic detectors. Each

Copyright Goodheart-Willcox Co., Inc.

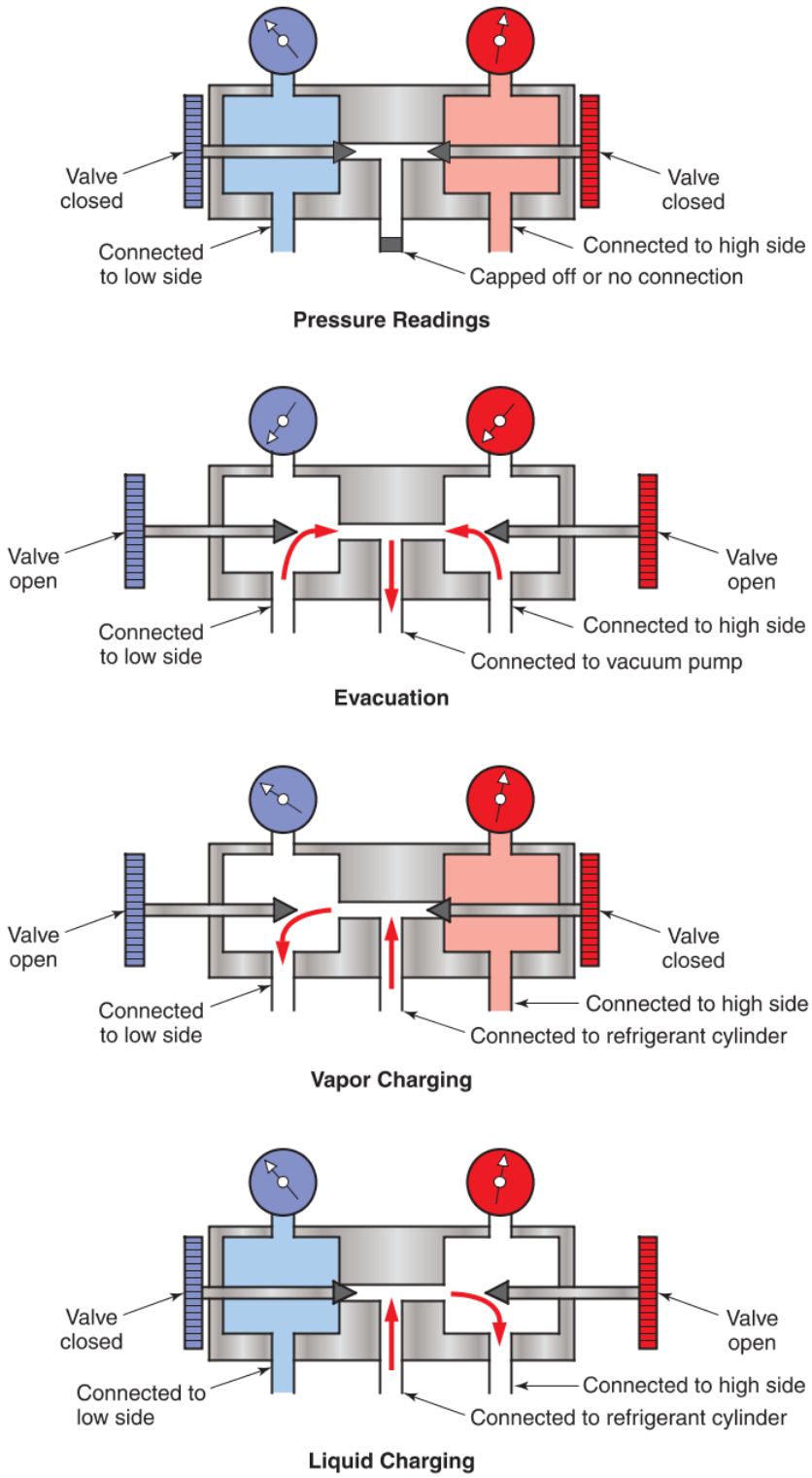

Goodheart-Willcox Publisher

Figure 10-36. Various valve positions of a gauge manifold. By adjusting the positions of the manifold valves, a technician can use a gauge manifold to check low-side and high-side pressures, evacuate a system with a vacuum pump, and charge a system with either liquid or vapor refrigerant.

Copyright Goodheart-Willcox Co., Inc.

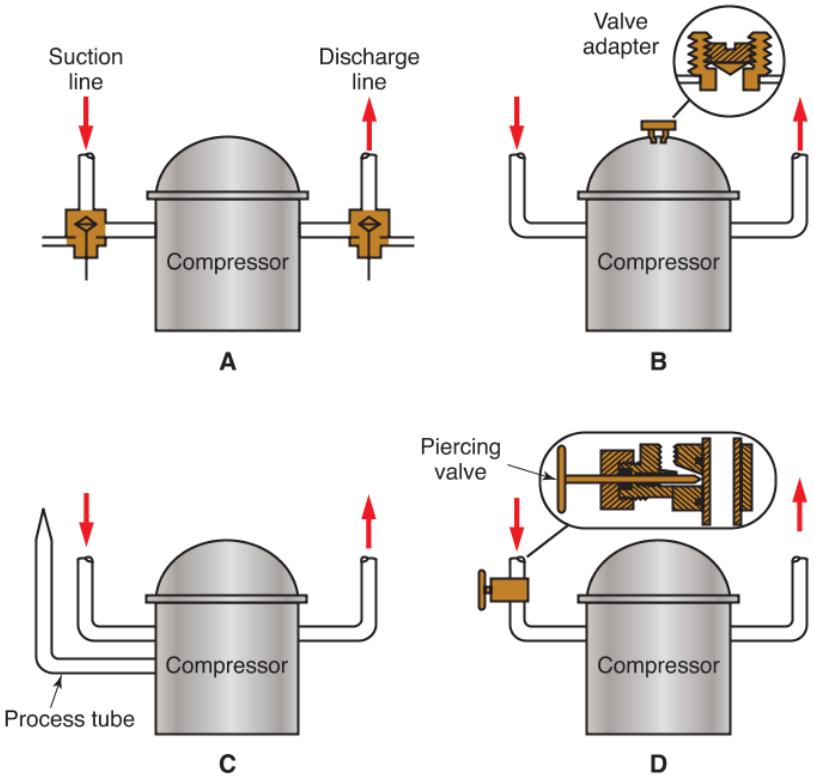

Goodheart-Willcox Publisher

Figure 10-37. Four different methods for accessing a refrigeration system are shown here. A—Factory-installed service valves. B—Factory-installed valve adapter on the compressor. C—Process tube attached to the compressor. D—Piercing valve installed on the suction line.

Ritchie Engineering Co., Inc. – YELLOW JACKET Products Division

Figure 10-38. Refrigeration system analyzer kit with gauges, hoses, and multiple transducers.

Copyright Goodheart-Willcox Co., Inc.

Mastercool Inc.

Figure 10-39. A refrigeration system analyzer displaying measurements and values for superheat, dry bulb temperature, wet bulb temperature, relative humidity, air velocity, and temperature split.

method has pros and cons. Sometimes it is useful to combine leak detecting methods, using one method to locate the general area of the leak and another method to pinpoint the exact spot. Some helpful tips to remember while looking for leaks include the following:

- Check connections early in your search. Leaks often form at tubing connections, such as brazed areas, and at high-stress or high-vibration areas, such as tubing near a compressor.
- Look for oily or dusty areas. Because a small amount of oil often escapes through a refrigerant leak, oily areas are often good indicators that a leak is nearby. Dust often gathers and sticks to oily areas.
- Eliminate any wind or breezes by blocking off detection areas with cardboard or another material.
- Block out any bright lights, such as sunlight, when using color-changing methods, such as a halide torch or fluorescent dye.
- If possible, when using an ultrasonic detector, turn off any equipment that could produce sounds that would cause the detector to sound a false alarm.
- It is useful to operate the system, if possible, prior to leak detection to build up pressure when using soap bubbles or refrigerant dye. The higher pressure will force the refrigerant out in a larger spray pattern.

Code Alert

EPA Leak Repair Standard

According to Section 608 of the Clean Air Act, leak repairs are required within 30 days if a leaking system contains more than 50 lb of refrigerant and has yearly leak rates at or above trigger levels. The trigger level for commercial and industrial refrigeration systems is 35%. The trigger level for comfort cooling and other appliances is 15%. These leak repair regulations do not apply to refrigeration systems with less than 50 lb of refrigerant.

Thinking Green

Refrigerant Loss Logs

Keeping accurate logs of customers' refrigerant use and loss will help technicians detect leaks early. The earlier a leak is detected and repaired, the smaller the environmental impact of the leak.

10.5.1 Bubble Solutions

The majority of leaks are found using a bubble solution. A ***bubble solution*** is a soap-water or patented solution that is brushed over an area of tubing that is suspected of leaking. If there is a leak, the vapor coming through the solution film causes bubbles to form.

Copyright Goodheart-Willcox Co., Inc.

Specialized leak-detection solutions provide a stronger, longer-lasting bubble film than soap-water solutions. These specialized solutions often produce very elastic bubbles that balloon much larger than soap-water bubbles. For this reason, specialized solutions are more effective than soap. **Figure 10-40** shows two examples of bubble solutions reacting to the presence of a leak.

Caution

Bubble Solution and Oxidation

Remember to wipe the bubble solution off the tubing or fitting after each leak check. Over time, bubble solution can oxidize copper.

Compared to other methods, a bubble solution is a low-cost, easy method of leak detection. Also, because halide torch and electronic leak detectors react to the refrigerant used as an expander in urethane insulation, the bubble test is the most reliable test to use in the presence of urethane insulation. A disadvantage is that large high-pressure leaks can blow through a solution so that no bubbles will appear.

10.5.2 Refrigerant Dye and Fluorescent Dye

Refrigerant dye leak detection involves charging a dye into a refrigeration system and observing areas suspected of leaks during operation. While the system is running, a technician visually inspects various parts for the dye color, which will be produced at the point of the leak, **Figure 10-41**.

Refrigerant dye is injected into the system, and the system is returned to normal operation. The dye method depends on the oil circulation rate. Most leaks show up in a short time. However, it may take a long period of time (up to 24 hours) to indicate leaks, especially if it is a very small leak.

Caution

Excessive Refrigerant Dye

Avoid injecting an excessive amount of refrigerant dye into a system to check for leaks. Dyes can reduce a refrigerant's cooling capacity, lower lubricant viscosity, and even damage internal components in high concentrations. Also, make sure to use a refrigerant dye that is compatible with the type of refrigeration lubricant used in the system.

Fluorescent dye leak detection uses fluorescent dye and an ultraviolet light to detect leaks. While circulating a fluorescent dye through a system, a technician visually scans refrigerant tubing with an ultraviolet light. This method may be used with a variety of refrigerants, including R-134a, **Figure 10-42**.

The biggest advantage of the fluorescent leak detection method is that there are no false alarms. If you see a fluorescent gas, there is a leak. Unfortunately, wind and bright sunlight may make detecting a small leak difficult.

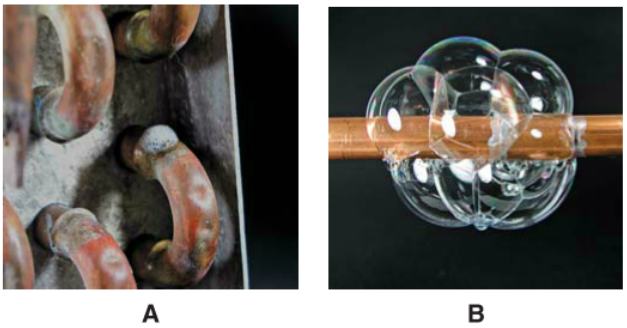

Refrigeration Technologies

Figure 10-40. A—These small bubble clusters on this evaporator coil indicate small micro-leaks. B—Large bubbles indicating a larger leak.

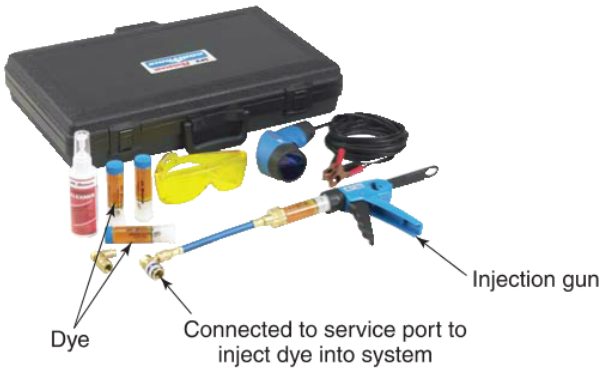

SPX Corporation

Figure 10-41. Dye injection kits often include an injection gun and multiple dye cartridges.

10.5.3 Halide Torch Leak Detectors

Alcohol, propane, acetylene, and most other gases burn with an almost colorless flame. The flame will continue to be almost colorless if a copper strip is placed in it. However, if the tiniest quantity of a halogen refrigerant is brought into contact with the heated copper, it will cause the flame to change to a light green color. This principle is used in halide torches to detect leaks in refrigeration systems. All CFC, HFC, and HCFC refrigerants are halogenated refrigerants.

Copyright Goodheart-Willcox Co., Inc.

Spectronics Corporation

Figure 10-42. Fluorescent leak detection equipment is available in a variety of sizes and styles, such as this flashlight-sized LED lamp.

Halide torch leak detection involves burning a fuel gas near a copper plate and using a rubber hose to siphon air from areas suspected of leaking refrigerant. If the flame changes to green, a refrigerant leak is near the inlet of the rubber hose. A halide torch is shown in **Figure 10-43**.

The torch burner is at the top by the flame window. One end of a rubber tube is connected to the base of the burner. The other end of the tube is slowly moved around various parts of the refrigeration system being tested. The rubber tube draws air from its open end into the burner. As the open end of this tube is moved near a leaking connection, it draws up some of the leaking refrigerant vapor. The burning vapor immediately turns the flame color green, indicating a leak. Be aware that bright sunlight can make it difficult to observe a slight color change in the flame. Windy or drafty conditions also create difficulties in using a halide torch.

Pro Tip

Halide Torch Leak Detection and Urethane Insulation

A halide torch should not be used around urethane insulation, as urethane uses some refrigerant chemicals as an expander. When halide torches are used near urethane, they may indicate a leak whether there is one or not.

Halide torches are no longer commonly used. However, in the proper conditions with the applicable refrigerants, they can be used with success. Even after a suspected leak area has been identified, it is still good to confirm the leak by testing it with a bubble solution.

10.5.4 Electronic Leak Detectors

Electronic leak detection uses electronic sensors to determine if a refrigerant is present. Electronic leak detectors are often powered by batteries and are typically able to detect very small leaks, **Figure 10-44**.

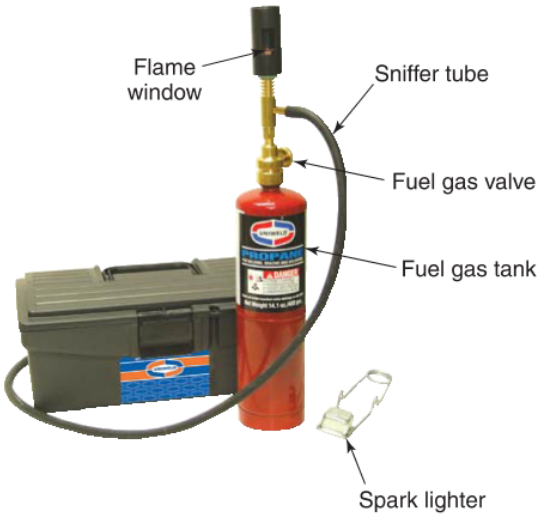

Uniweld Products, Inc.

Figure 10-43. Halide torches are used to test for leaks. A green flame showing in the flame window indicates a leak near the sniffer tube opening.

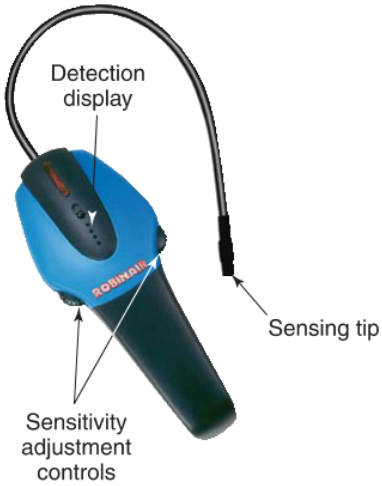

SPX Corporation

Figure 10-44. Electronic leak detectors like this one commonly use audio and visual indicators to alert technicians of a leak.

Copyright Goodheart-Willcox Co., Inc.

An electronic leak detector is turned on and adjusted to atmospheric pressure. The leak-detecting probe is then passed over surfaces suspected of leaking. Air is drawn into the leak detector by a small pump inside the unit. If there is even a tiny leak, refrigerant is drawn into the probe. The unit then emits a piercing sound, flashing light, or both. In some detector models, the frequency of the sound or flashing light increases in relation to an increasing concentration of refrigerant. The closer you are to the leak, the louder and faster the sound from the detector.

When using an electronic leak detector, minimize drafts. Shut off fans or other devices that cause air movement. Always position the sniffer below the suspected leak. Since refrigerant is heavier than air, it drifts downward. Move the tip slowly, at a rate of about one inch per second. Just waving the wand in the air will not locate a small leak on a tube. If the probe tip comes in contact with a surface, it can become contaminated by water or other substances, interfering with the proper operation of the detector. A plastic tip guard should be used in situations that might contaminate the sensing tip.

Safety Note

Explosive or Flammable Vapors

Halide torches and electronic leak detectors should not be used in areas containing explosive or flammable vapors.

Electronic leak detectors provide similar responses to CFCs, HCFCs, HFCs, and refrigerant blends. Therefore, it is not necessary to determine the refrigerant in use or reset the detector for different refrigerants.

Pro Tip

Electronic Leak Detectors and Urethane Insulation

Electronic leak detectors are difficult to use around urethane insulation because urethane uses refrigerant chemicals as an expander. When an electronic leak detector is used near urethane, it may indicate a leak even if there is no leak.

10.5.5 Ultrasonic Leak Detectors

Ultrasonic frequencies are sound waves that are beyond the range of human hearing. ***Ultrasonic leak detectors*** detect the sound that a vapor makes as it is escaping from a pressurized system. Some units have headphones connected to a portable, handheld detector that picks up ultrasonic sounds. Others simply consist of a handheld device with LEDs or some other indicator feature, **Figure 10-45**.

Ultrasonic leak detectors modify and amplify the sound of a leak and play it through the headphones. Background noise produced by equipment not related to the refrigeration system can sometimes produce false alarms in some ultrasonic leak detectors.

10.6 Vacuum Pumps

A ***vacuum pump*** is a vapor pump used to create vacuums for evacuating a refrigeration system of moisture and other contaminants before refrigerant is recharged into the system, **Figure 10-46**. A high-vacuum pump will produce a vacuum higher than 28.92 in. Hg vacuum (less than 25.4 mm Hg or 25,400 microns). Most manufacturers recommend a vacuum of 500 microns prior to charging a system. This can take several hours depending on the system size. Creating such low-pressure conditions is necessary to completely *dehydrate* (remove moisture from) the system. It is necessary to remove all substances from the system because any foreign materials could cause higher pressures than usual and possibly damage the system.

HVACR technicians should be familiar with vacuum pump specifications in order to choose the proper vacuum pump for a given job. ***Ultimate vacuum*** is the highest vacuum that a vacuum pump can pull. It is the most important specification of a vacuum pump, and it is usually measured in microns. The lower the number of microns, the higher the vacuum a vacuum pump can pull. Ultimate vacuum may also be called *blank off pressure*. ***Free air displacement*** is the speed at

Photo courtesy of INFICON

Figure 10-45. Since ultrasonic leak detectors operate by identifying certain sounds, they are compatible with all refrigerant types.

Copyright Goodheart-Willcox Co., Inc.

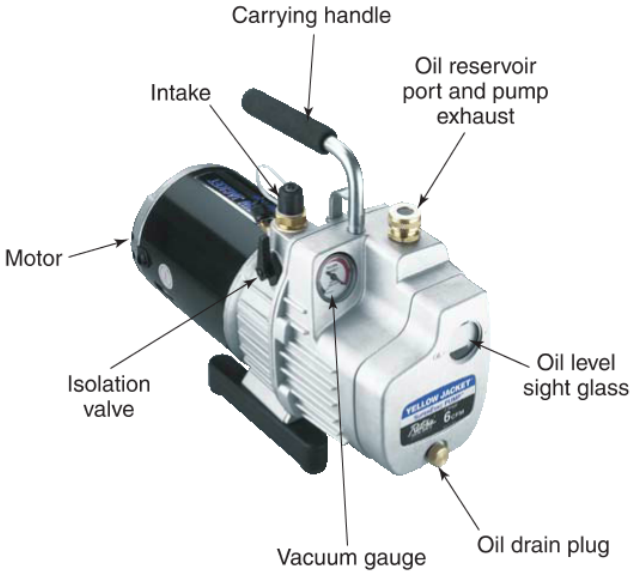

Ritchie Engineering Co., Inc. – YELLOW JACKET Products Division

Figure 10-46. Though designs may vary, vacuum pumps are often recognizable as having a motor, a vacuum gauge, an oil level sight glass, and an oil drain plug.

which gas may be pumped through a vacuum pump. It is measured in units of cfm (cubic feet per minute). The higher a vacuum pump's free air displacement number, the more gas is moved per minute. Free air displacement may also be referred to as *volume capacity*. Below are a few examples of vacuum pump capacities used for different size refrigeration systems:

- 1.5 cfm—3- to 5-ton residential systems.
- 3–5 cfm—5- to 100-ton medium systems.
- 10–15 cfm—large systems over 100 tons.

10.6.1 Types of Vacuum Pumps

There are two main types of vacuum pumps: single stage and two stage. Single-stage vacuum pumps use a single pump mechanism to draw a vacuum. These can only be used when the triple evacuation method is employed. Two-stage vacuum pumps consist of two pump mechanisms working in series. The two pump mechanisms working together are able to draw a vacuum more efficiently than a single pump mechanism working alone. These are used when the deep-vacuum (high-vacuum) method is used. Two-stage vacuum pumps are the most commonly used type. Procedures for pulling a deep vacuum and triple evacuation are covered in Chapter 11, *Working with Refrigerants*.

Care should be taken to purge refrigerant from the service lines when connecting hoses to a unit. A high-vacuum rotary pump can pull a 50-micron vacuum pressure. This deep vacuum is necessary to boil off moisture in the system. Most high-vacuum rotary pumps use two rotors in series (two-stage pump), **Figure 10-47**.

10.6.2 Oil in Vacuum Pumps

The purpose of oil in a vacuum pump is to act as a lubricant for the pump and as a fluid seal between air, gases, and contaminants entering the pump from the refrigeration system. During evacuations, gases and water vapor pulled from the refrigeration system often become trapped in the oil, which raises the oil level in the pump.

Many vacuum pumps have a sight glass that allows technicians to check the oil level and oil color. Vacuum pump oil should be replaced frequently since oil rapidly becomes dirty when water and solvent vapor are drawn and dissolved into it. Water will also turn the oil white and foamy. If dirty or degraded oil is left in the pump, sludge will form, reducing the service life of the pump. When vacuum pump oil is clear, it means it is clean. Dirty oil also reduces a pump's ultimate vacuum.

For good evacuation results, change vacuum pump oil before each system evacuation or test the vacuum pump. The quickest test method is to isolate the vacuum pump from the system and pull a vacuum on the vacuum hose only.

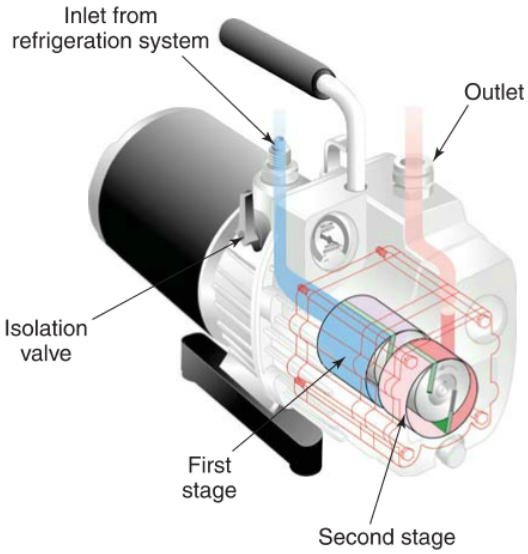

Ritchie Engineering Co., Inc. – YELLOW JACKET Products Division

Figure 10-47. A two-stage, high-vacuum rotary pump uses two rotors in series.

Copyright Goodheart-Willcox Co., Inc.

Testing a Vacuum Pump

1. Using a tee fitting, connect an electronic vacuum gauge between the vacuum pump and the center port of a gauge manifold.
2. Close the low- and high-side gauge manifold valves.
3. Start the vacuum pump.
4. Allow the pump to run long enough to pull a vacuum of approximately 500 microns.
5. Turn off the vacuum pump and wait two to three minutes, allowing the vacuum pressure to rise as moisture boils off inside the hose.
6. Pull another vacuum down to 500 microns.
7. Watch the vacuum gauge reading. If it rises, check for leaks at the hose fittings.

If a pump will not pull down to high vacuum, change the oil. Always follow the manufacturer's directions.

Mastercool Inc.

Figure 10-48. With the proper equipment, refrigerant recycling can be done on a jobsite. Such kits will include the proper type of filter for recycling the refrigerant.

10.7 Recovery, Recycling, and Reclaiming Equipment

The term ***recovering*** refers to removing refrigerant from a system and storing it in an external container, regardless of the condition of the removed refrigerant. It is illegal to purge or vent refrigerants into the atmosphere. Recovery equipment is designed to allow the technician to safely remove refrigerant from refrigeration equipment so the equipment can be repaired or properly disposed of without harming the atmosphere.

The term ***recycling*** refers to cleaning a refrigerant for reuse by separating out the oil and passing the refrigerant through filter-driers. These filters reduce moisture, acidity, and foreign materials. Recycling is generally done on a jobsite where the HVACR system is located or at a local service shop, **Figure 10-48**.

In most cases, *recovered* refrigerant is returned to the system from which it was taken following repair of the system. *Recycled* refrigerant can be returned to the system it was recovered from or used in another system belonging to the same owner. EPA regulations prohibit a change of ownership of recycled refrigerant, so that it may not be sold or given away. Before a recovered refrigerant can be sold, it must be reclaimed.

The term ***reclaiming*** refers to reprocessing a recovered refrigerant so that it is chemically pure. In order to ensure purity, the reprocessed refrigerant must be analyzed at an approved testing facility before it can be classified as being reclaimed. According to EPA regulations, reclaimed refrigerant must meet the AHRI Standard 700 for purity. A reclaimed refrigerant can be charged back into any unit designed for use with that refrigerant. Reclamation services are available only at a reprocessing or manufacturing facility.

Refrigerant recovery management equipment is divided into three categories:

- Recovery—a unit that removes the refrigerant.
- Recovery/Recycle—a unit that removes and filters the refrigerant.
- Reclaim—a unit that reprocesses refrigerant to a pure state, in accordance with EPA regulations.

The technician must always follow local, state, and EPA rules and regulations when working with refrigerants. Proper procedures must always be followed when operating refrigerant recovery/recycling equipment. Always follow the manufacturer's instructions when operating such equipment.

Upon determining that there is a leak or fault in a refrigeration system, a service technician must recover all the refrigerant in the unit. After recovery of the refrigerant, the technician can fix the leak and then use a vacuum pump to fully evacuate the system prior to recharging.

Code Alert

Refrigerant Recovery and Recycling

In the past, refrigerants were often vented to the atmosphere. Section 608 of the Clean Air Act prohibits this. Refrigerant is now recovered and recycled. When opening equipment for service, technicians must evacuate the HVACR equipment to established vacuum levels.

Copyright Goodheart-Willcox Co., Inc.

10.7.1 Refrigerant Recovery Equipment

Advanced technology has made refrigerant recovery machines faster and lighter, **Figure 10-49**. Many recovery machines are self-purging, eliminating the need to change hoses at the end of the recovery process. These machines are compatible with all commonly used CFC, HCFC, and HFC refrigerants.

During recovery, refrigerant is removed from the system in whatever condition it happens to be and is stored in a recovery cylinder. Then, the refrigerant can be recycled at a service center. It can also be sent to a reclaiming station and used at a later date. The primary purpose of recovery equipment is to remove refrigerant from a system. Recovery machines should be used in conjunction with other instruments, such as a digital scale, in order to measure the amount of refrigerant removed from a system.

Some recovery machines are sold with a recovery cylinder from the manufacturer. Replacement cylinders are readily available. Some recovery machines are equipped with an automatic vacuum shutoff and an automatic liquid-level shutoff that respond to an integrated level switch in the recovery cylinder. This level switch is electrically connected to the recovery machine and automatically shuts off the machine when the recovery cylinder is filled to capacity. This feature acts as a second layer of control along with scales or other weighing devices.

Code Alert

Equipment Certification

All recovery machines manufactured after November 15, 1993, are required to be certified by an EPA-approved testing organization. Certification ensures that the recovery equipment will be able to achieve the required vacuum levels. Technicians servicing or disposing of air conditioning or refrigeration equipment must acknowledge in writing to the EPA that the recovery equipment used is EPA-approved.

Maintenance of recovery machines requires a small time commitment, but will extend the life of the machine. Always follow the manufacturer's maintenance guidelines. The following are some typical maintenance tasks for recovery machines:

- Change the filter-drier. Always replace the filter-drier per the manufacturer's schedule. The function of the filter-drier is to remove contaminants (including moisture) from the refrigerant. If the recovery machine contains an inlet filter-drier, it should be replaced as often as the manufacturer recommends.
- Perform leak checks. The fittings for connections may loosen with use. This can cause a refrigerant leak. Fittings should be checked approximately every three months.
- Verify overfill or high-pressure shutoff. The tank overfill protects the user against injury if excessive pressure should occur and cause a rupture.
- Check gauge calibration. Use a reference gauge and compare its readings against the recovery machine's gauge. Follow the manufacturer's guidelines if recalibration is required.
- Check the recovery machine's compressor oil. Adequate lubrication protects working parts and ensures the long life of a machine. In general, compressor oil should not need to be changed or added. However, if slugging of the compressor with liquid refrigerant has occurred, the oil may be washed out. Some machines use oilless compressors. Oilless machines alleviate concerns regarding loss of lubrication.
- Complete a visual inspection. Inspect hoses and hose fittings for damage and loosening. Check tank fittings. Check the date on the tank to be sure that it has not expired. Tanks should be recertified every five or ten years. Follow the manufacturer's instructions for checking lights and other electronic indicators. Clean the case and control panel once a week.
- Use appropriate cables. Be certain to use a heavy-duty extension cord capable of handling the electrical current draw of the recovery machine. Use as short an extension cord as possible.

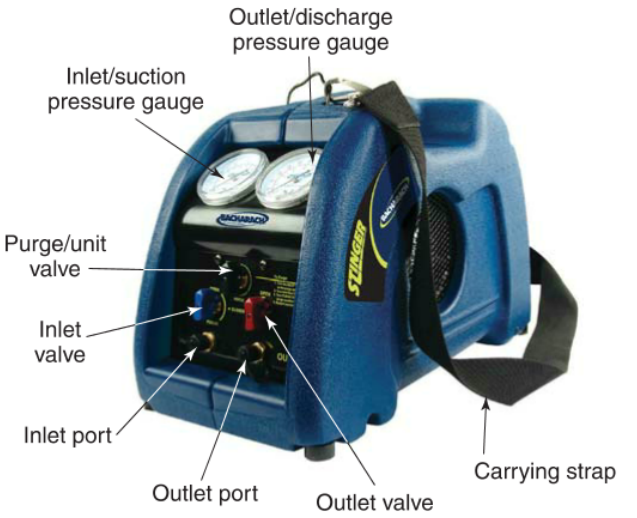

Bacharach, Inc.

Figure 10-49. This compact recovery machine has a shoulder strap allowing the unit to be easily transported.

Copyright Goodheart-Willcox Co., Inc.

10.7.2 Refrigerant Recycling Equipment

Refrigerants recovered from a system cannot be reused unless they are first cleaned. ***Recovery/recycling machines*** recover and clean the refrigerant on site or at a local service shop. Recovery/recycling machines must be built to EPA standards for recovery rate and amount of vacuum the machine is capable of pulling. The recovery/recycling machine must contain a label that indicates it has been certified to comply with AHRI Standard 740.

Recovery/recycling machines provide on-site filtering so refrigerants can be put back into service, **Figure 10-50**. However, the recycled refrigerant must be used in the system from which it was recovered or another system with the same owner. Replaceable-core filter-driers or other devices reduce moisture, particles, and acidity. Some of the machines separate the oil and acid and measure the oil in the vapor. Oil separation is achieved by one or more passes through the machine.

A single-pass recycling machine processes refrigerant through a filter-drier and uses distillation to separate the oil from the refrigerant. The refrigerant makes only one trip through the machine and then is stored in a recovery cylinder. A multiple-pass recycling machine recirculates refrigerant through the filter-drier many times and does not distill the oil-refrigerant mixture. After a given period of time or a certain number of cycles, the refrigerant is transferred into the recovery cylinder.

The following guidelines apply to recovery/ recycling equipment:

- Follow manufacturer's guidelines. Change filters and check the system and recycling equipment for leaks as recommended.
- Use proper recovery and recycling procedures. Do not vent refrigerants into the atmosphere. Handle refrigerant safely and properly. Keep the refrigerant contained and keep the air out. Most new recovery/recycling systems have shutoff valves. The shutoff valves operate automatically as the hose is connected or disconnected.
- Use basic refrigeration principles as guidelines. When transferring refrigerant from one cylinder to another, use the liquid transfer method when possible. This will allow transferring all of the liquid from one tank to the other without an accumulation of frost building up on the tank.
- Always use appropriate cylinders. Do not fill the cylinder with more than the recommended amount of refrigerant. Specific instructions for calculating the maximum recommended capacity are presented in Chapter 11, *Working with Refrigerants*. Do not use disposable or unapproved containers.
- Do not mix refrigerants. Clearly mark each cylinder. Thoroughly clean cylinders and all fittings upon completion of tasks.
- Change the filter-drier. Each time a recovery/recycling machine is connected to a new system, remember to change the filter-drier. This prevents mixing of refrigerants.

Many recovery/recycling machines are designed to be versatile and easy to use. This is essential for performing difficult service calls in a short period of time. Occasionally, refrigeration systems are in inconvenient locations where technicians cannot bring all their tools and equipment. In some cases, the recovery/recycling machine remains in the service vehicle. With hoses connected to the machine in the vehicle, the technician brings the gauge manifold and the other ends of the hoses to the refrigeration system location.

The entire recovery, recycling, and recharging operation is done by opening and closing valves. A recovery/recycling machine can be operated in both

Ritchie Engineering Co., Inc. – YELLOW JACKET Products Division

Figure 10-50. Recovery/recycling machines can be used on the jobsite to recover refrigerant, clean it, and charge it back into the refrigeration system. The recovery/recycling machine shown here is designed for use on automobile air conditioning systems.

Copyright Goodheart-Willcox Co., Inc.

the liquid and vapor cycles, and the hoses do not have to be changed between processes. A recovery/ recycling system includes a refrigerant compressor that is used for refrigerant recovery and a vacuum pump used for evacuation.

10.7.3 Refrigerant Reclaiming Equipment

Reclamation is the reprocessing of a refrigerant to its original production specifications. This must be verified by chemical analysis. Refrigerants are recovered at the jobsite and taken to a refrigerant reclamation center, which has the capability to clean and test large quantities of refrigerant. In accordance with EPA regulations, the machine performing the reclamation must meet AHRI Standard 740 and remove 100% of the moisture and oil particulates. Many recovery/ recycling machines cannot guarantee that the refrigerant will be returned to its original specifications and, therefore, cannot be regarded as reclaiming machines.

The operation of a typical reclamation system can be described as follows:

1. The refrigerant is introduced into the reclamation system as either vapor or liquid.
2. The refrigerant is boiled at high temperature under extremely high pressure.
3. The refrigerant then enters a large separator chamber where its velocity is greatly reduced. This allows the vapor, at high temperature, to rise. During this phase, contaminants (such as copper chips, carbon, oil, and acid) drop to the bottom of the separator, where they will be removed.
4. The distilled vapor passes to the air-cooled condenser and is converted to liquid.
5. A replaceable filter-drier in the reclaimed refrigerant circuit removes the moisture as well as the microscopic contaminants.
6. The liquid passes into on-board storage chambers. Within these chambers, an evaporator assembly lowers the liquid refrigerant temperature.
7. The refrigerant is transferred to external cylinders.

Numerous refrigerant manufacturers have set up refrigerant reclamation services. These provide a way to dispose of used refrigerant and obtain pure replacements as needed. To make use of these services, a technician must first select the appropriate DOT-approved recovery cylinders and fill out tags identifying the refrigerant to be reclaimed. Standard cylinders will hold approximately 100 lb of used refrigerant and oil. Other containers can range from 40 lb to one ton. On large commercial installations, sample cylinders are provided. These are sent back to a reclaiming center. This is done to obtain refrigerant analysis of contaminants prior to evacuation and approval for reclamation.

After being approved for reclamation, the refrigerant is recovered from its system and stored in a recovery cylinder. The refrigerant must then be taken to a service shop and shipped to a refrigerant reprocessing center. The reprocessing center reclaims the refrigerant and returns it for future sale as a used refrigerant. Both low-pressure refrigerants and high-pressure refrigerants can be reclaimed. Early refrigeration units used carbon dioxide, ammonia, and various other gases as refrigerants, some of which may be flammable or dangerous and should not be reclaimed. When in doubt of the type of refrigerant in a system, contact an EPA-approved reclamation center before removing the refrigerant.

Company standards vary regarding refrigerant transportation procedures. The technician recovering the refrigerant should closely follow the procedure outlined by the company providing the service. For record keeping and government compliance, the service company requires the technician to fill out various forms documenting the exchange of refrigerant.

Reclamation companies can also dispose of unwanted refrigerants. This can only be accomplished by incineration at 1200°F (649°C). The EPA has certified plants throughout the United States that are equipped to do so.

Thinking Green

Refrigerant Conservation

An environmentally conscious technician not only minimizes and repairs all refrigerant leaks, but also takes steps to ensure that refrigerants remain pure, clean, and dry. For example, if a compressor motor burns out because of improper service, the technician has not only cost the customer money, but has also wasted the energy and materials that will be required to evacuate and flush the system and recycle the refrigerant.

10.7.4 Digital Charging Scales

A ***digital charging scale*** is an electronic refrigerant scale that monitors the weight of a refrigerant cylinder as refrigerant is being charged into or recovered from a system. Some models of these scales are also automated to start or stop the flow of refrigerant into the cylinder, **Figure 10-51**.

When using a digital charging scale, a technician places a refrigerant cylinder on the scale to enter its weight. This weight includes the weight of the cylinder and the weight of the refrigerant inside the cylinder. The technician then enters the refrigerant cylinder's tare weight, which is the weight of the refrigerant cylinder when it is empty. This value should be stamped on the cylinder. The scale then calculates the weight of the refrigerant in

Copyright Goodheart-Willcox Co., Inc.

Ritchie Engineering Co., Inc. – YELLOW JACKET Products Division

Figure 10-51. A digital charging scale equipped with a solenoid valve that stops the charging or recovery process when the programmed refrigerant weight has been removed or added from the cylinder.

the cylinder by subtracting the tare weight from the total weight of the refrigerant and the cylinder.

The technician enters the amount of refrigerant to charge into a system. The scale measures the total cylinder and refrigerant weight as refrigerant is being charged into the system. When the weight measured indicates that the proper amount of refrigerant has been charged, the scale illuminates a light, sounds an alarm, or stops the flow of refrigerant being pumped out of the cylinder.

Maximum gross capacities that digital charging scales can measure vary among manufacturer models. Some common maximum gross capacity values include 110 lb (50 kg), 220 lb (100 kg), and 330 lb (150 kg). Many scale displays can switch from US Customary values to SI values. Some digital scales are equipped with a *Hold* key that allows the technician to interrupt the charging or recovery cycle by closing a solenoid valve. This can be done without losing the programmed values, so the charging or recovery can resume right where it left off, **Figure 10-52**.

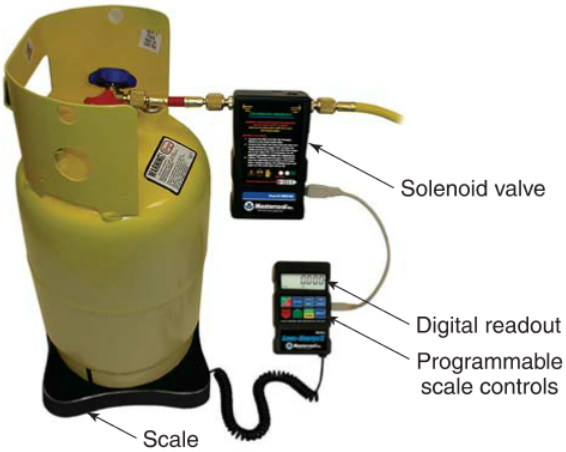

A

Wireless Charging Scale

Solenoid Valve Built into the Scale

B

Ritchie Engineering Co., Inc. – YELLOW JACKET Products Division; Mastercool Inc.

Figure 10-52. Some digital charging scales can be equipped with a solenoid valve to stop the charging or recovery process when the programmed refrigerant weight has been removed or added from the cylinder. A—An external solenoid valve for charging or recovery. B—A solenoid valve built into the scale.

Copyright Goodheart-Willcox Co., Inc.

Chapter Review

Summary

- There are three main types of refrigerant cylinders: storage, disposable, and recovery. The Department of Transportation (DOT) sets regulations for refrigerant cylinders in order to ensure technician safety.
- Pressure gauges are instruments that measure and display the pressure of a fluid in a container. The three main types of pressure gauges used in HVACR work are vacuum gauges, compound gauges, and high-pressure gauges.
- Service valves have four different positions for different operations: back seated, front seated, mid-position, and cracked open. Service valves are placed on both the low side and high side of an HVACR system to allow the technician to check pressures and isolate refrigerant in certain parts of the system.
- An access port is a small valve opening to a refrigeration system that usually contains a Schrader valve and is mostly used for checking pressure. A piercing valve is a valve that is secured to a length of tubing and accesses the refrigeration system by piercing through the tubing.
- Gauge manifolds are used to take pressure measurements, charge refrigerant, recover refrigerant, and evacuate a system. It is important to purge a gauge manifold and its hoses before performing any system procedures.
- Leaks often form at tubing connections and areas under high stress or vibration. Bubble solutions, dyes, halide torches, and electronic and ultrasonic leak detectors can be used to detect leaks in a system. Each method has both advantages and disadvantages.
- A vacuum pump should be used to evaporate moisture from a system and achieve a specific vacuum level before recharging the system with refrigerant. Vacuum pumps are rated based on their ultimate vacuum and free air displacement.
- Refrigerant recovery machines allow a technician to make repairs on a system without venting refrigerant into the atmosphere. Recovery machines are used to remove refrigerant from a system and store the refrigerant in a recovery cylinder.
- Recycling is the process of cleaning a refrigerant for reuse. Recycled refrigerant cannot be sold to a different owner.
- Reclaiming a refrigerant is the act of reprocessing a refrigerant to certain purity specifications. Reclamation is performed by refrigerant reprocessing or manufacturing companies.
- A digital charging scale ensures that the proper amount of refrigerant is charged into a system. Tare weight is the weight of a refrigerant cylinder when it is empty.

Review Questions

Answer the following questions using information in this chapter.

1. Which governmental body sets refrigerant cylinder regulations?
   A. Occupational Safety and Health Administration (OSHA)
   B. Environmental Protection Agency (EPA)
   C. Department of Transportation (DOT)
   D. Department of Labor (DOL)
2. Large refrigerant cylinders are protected against bursting by a _____.
   A. protective cap
   B. compressible bladder at the bottom of the tank
   C. small surge tank
   D. fusible plug
3. Large refrigerant cylinders called _____ cylinders are often positioned upside-down with their valves at the bottom.
   A. recovery
   B. storage
   C. disposable
   D. returnable
4. The operating element used in pressure gauges that is made of a thin-walled tube of metal bent into a circular shape is called a _____.
   A. Bourdon tube
   B. thermocouple
   C. bimetal strip
   D. retarder

Copyright Goodheart-Willcox Co., Inc.

5. The device that engages an extra spring in a pressure gauge to adjust the gauge's calibration to higher graduation marks on its scale is a _____.
   A. Bourdon tube
   B. thermocouple
   C. bimetal strip
   D. retarder
6. A pressure gauge that is specifically designed to measure lower-than-atmospheric pressure is a _____.
   A. compound gauge
   B. vacuum pump
   C. high-pressure gauge
   D. vacuum gauge
7. Vacuum gauges use the following units to measure vacuum pressure *except* _____.
   A. in. Hg vacuum
   B. torr
   C. psi
   D. microns
8. A pressure gauge designed to measure pressure above and below atmospheric pressure is a _____.
   A. vacuum gauge
   B. compound gauge
   C. high-pressure gauge
   D. recovery gauge
9. A pressure gauge that can read high-pressure values on a single continuous scale, from 0 up to 800 psi, is a _____.
   A. vacuum gauge
   B. compound gauge
   C. high-pressure gauge
   D. recovery gauge
10. A service port is closed off from the refrigeration system when the service valve is _____.
   A. back seated
   B. front seated
   C. mid-position
   D. cracked open
11. Which of the following service valves is located on the low side of a refrigeration system?
   A. Discharge service valve
   B. Suction service valve
   C. King valve
   D. Queen valve
12. During normal system operation, hot high-pressure refrigerant vapor flows through the _____ service valve.
   A. discharge
   B. liquid line
   C. liquid receiver
   D. suction line
13. Mostly used for checking pressure, a(n) _____ does *not* have a service valve to control the flow of refrigerant.
   A. queen valve
   B. king valve
   C. access port
   D. valve core remover
14. An externally threaded valve with a spring-loaded center pin is called a _____.
   A. discharge service valve
   B. piercing valve
   C. Schrader valve
   D. king valve
15. A technician must use a _____ to access small hermetic systems that do not have service valves or access ports.
   A. valve core remover
   B. king valve
   C. Schrader valve
   D. piercing valve
16. Which system procedure is normally done with both hand valves opened on a gauge manifold connected to a refrigeration system?
   A. Brazing
   B. Evacuation
   C. Liquid charging
   D. Pressure readings
17. The process of removing unwanted air, vapors, dirt, or moisture from gauge manifold hoses by venting them to the atmosphere is called _____.
   A. purging
   B. evacuating
   C. recovering
   D. reclaiming
18. Areas where leaks are likely to occur include all of the following, *except* _____.
   A. tubing connections
   B. straight runs of tubing
   C. high-vibration areas
   D. brazed joints

Copyright Goodheart-Willcox Co., Inc.

19. The leak detection method involving the application of a soap and water solution to areas where leaks are suspected is the _____ method.
    A. refrigerant dye
    B. halide torch
    C. ultrasonic
    D. bubble solution
20. Which of the following is a disadvantage of using an electronic leak detector?
    A. Cannot detect small leaks
    B. Can only be used with one refrigerant type
    C. Hard to see leaks in bright areas
    D. Produces false alarms near urethane insulation
21. The leak detection method that uses an ultraviolet light to find leaking refrigerant is the _____ method.
    A. fluorescent dye
    B. halide torch
    C. electronic detector
    D. bubble solution
22. The leak detection method that involves burning a fuel gas near a copper plate and using a rubber hose to siphon air from areas suspected of leaking refrigerant is the _____ method.
    A. fluorescent dye
    B. halide torch
    C. refrigerant dye
    D. ultrasonic detector
23. The leak detection method that detects the sound of vapor escaping from a pressurized system is the _____ method.
    A. fluorescent dye
    B. halide torch
    C. ultrasonic detector
    D. bubble solution
24. A device used for creating vacuums to dehydrate an HVACR system is a _____.
    A. vacuum gauge
    B. Bourdon tube
    C. retarder
    D. vacuum pump
25. Which of the following terms is used to specify the speed at which gas can be pumped through a vacuum pump?
    A. Blank off pressure
    B. Ultimate vacuum
    C. Free air displacement
    D. Single-stage volume
26. What acts as a fluid seal between air, gases, and contaminants entering a vacuum pump from the refrigeration system?
    A. Recovered refrigerant
    B. Refrigeration lubricant
    C. Vacuum pump oil
    D. Water reservoir
27. Cleaning a refrigerant for reuse by oil separation and single or multiple passes through filter-driers defines _____ a refrigerant.
    A. reclaiming
    B. recovering
    C. recycling
    D. evacuating
28. Removing a refrigerant from a system and storing it in an external container, regardless of the condition of the refrigerant, defines _____ a refrigerant.
    A. reclaiming
    B. recovering
    C. recycling
    D. evacuating
29. Reprocessing a refrigerant so that it is chemically pure defines _____ a refrigerant.
    A. reclaiming
    B. recovering
    C. recycling
    D. evacuating
30. An instrument used to monitor the weight of a refrigerant cylinder as refrigerant is being charged into or recovered from a system is a _____.
    A. digital charging scale
    B. gauge manifold
    C. service valve
    D. vacuum scale

Copyright Goodheart-Willcox Co., Inc.

Uniweld

A nitrogen cylinder and kit with different hoses and attachments can be used for multiple HVACR procedures, such as low flow purging for brazing, leak testing a refrigerant circuit, calibrating control devices, and cleaning lines, coils, and various parts.

Copyright Goodheart-Willcox Co., Inc.

CHAPTER 11 Working with Refrigerants

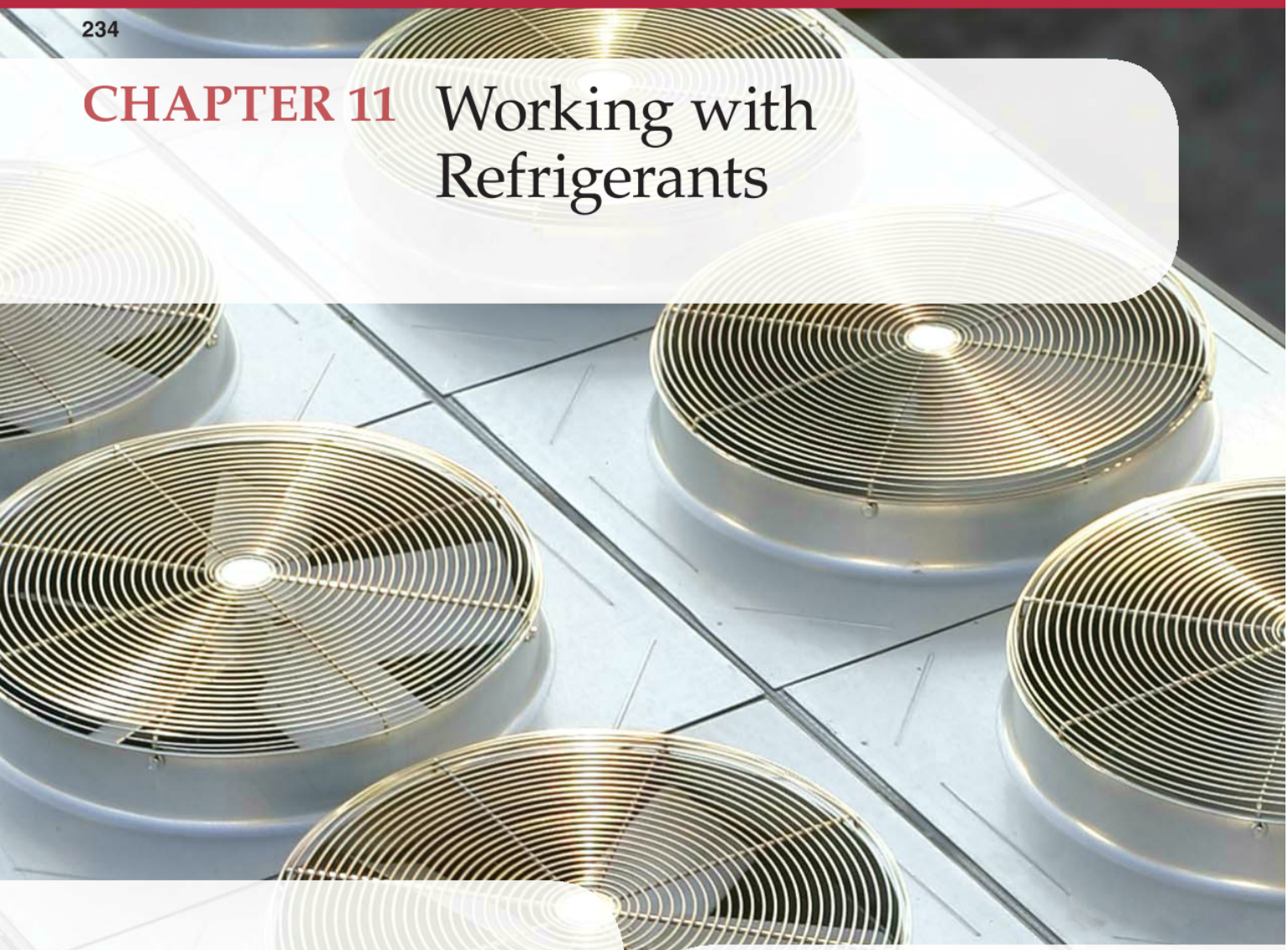

Chapter Outline

11.1 Checking Refrigerant Charge
- 11.1.1 Checking Refrigerant Charge by Subcooling
- 11.1.2 Checking Refrigerant Charge by Superheat

11.2 Redistributing Refrigerant
- 11.2.1 Pumping Down a Refrigeration System
- 11.2.2 Refrigerant Recovery Concepts and Procedures

11.3 Locating and Repairing Refrigerant Leaks
- 11.3.1 Pressure Testing for Leaks
- 11.3.2 Repairing Leaks with Brazing
- 11.3.3 Repairing Leaks with Epoxy Resin

11.4 Evacuating a System
- 11.4.1 Tips for Performing Evacuations
- 11.4.2 Deep Vacuum
- 11.4.3 Triple Evacuation

11.5 Charging a System
- 11.5.1 General Guidelines for Charging a System
- 11.5.2 Charging by Weight
- 11.5.3 Changing Refrigerants (Retrofitting)

Learning Objectives

Information in this chapter will enable you to:

- Check refrigerant charge by determining a system's superheat or subcooling.
- Implement both passive and active refrigerant recovery procedures.
- Charge a system with an inert gas to pressure test for leaks.
- Carry out refrigeration system leak repairs using either epoxy resin or brazing.
- Evacuate a refrigeration system using both deep vacuum and triple evacuation methods.
- Charge a specific amount of refrigerant into a system as either a liquid or vapor.
- Follow approved safety procedures when recovering and charging refrigerant.

Technical Terms

active recovery
charging
charging cylinder
deep vacuum
epoxy resin
evacuation
liquid recovery method
passive recovery
positive pressure
pump-down
push-pull liquid recovery method
retrofitting
subcooling
superheat
tare weight
triple evacuation
vapor recovery method
water capacity (WC)

Review of Key Concepts

Reviewing these concepts from earlier chapters will help you understand new concepts presented in this chapter:

- A technician can use a gauge to measure the pressure in an evaporator or condenser and then use a pressure-temperature chart to find the saturation temperature of the refrigerant inside the component. (Chapter 9)
- Recovery machines should be used in conjunction with other instruments, such as a digital charging scale, in order to measure the amount of refrigerant removed from a system. (Chapter 10)
- Specific gravity is the ratio of the mass of a certain volume of a liquid or a solid compared to the mass of an equal volume of water. Water is given a specific gravity of one. (Chapter 4)
- All air must be removed from tubing that is being brazed. This is best done by purging the tubing with a low-pressure flow of either carbon dioxide or nitrogen. (Chapter 8)
- A vacuum pump is used to remove moisture and other contaminants from a refrigeration system before refrigerant is charged into the system. (Chapter 10)

Introduction

Compression refrigeration systems require a precise amount of refrigerant to work properly. Having an excess of refrigerant or not enough refrigerant can cause a number of problems with operation. The amount of refrigerant a system requires varies depending on the size of the system, its cooling capacity, its metering device, and its system accessories. For instance, compression systems equipped with a liquid receiver can hold a range of refrigerant amounts because a certain amount of extra refrigerant can be stored in the liquid receiver and used when needed. However, compression systems with no liquid receiver often require a very specific amount of refrigerant. For example, systems using a capillary tube as the metering device must have a very specific refrigerant charge in order to operate properly.

Many service and repair procedures require a system to be emptied of refrigerant. In order to prepare technicians to perform these procedures, this chapter will explain recovery methods and techniques. Other standard service procedures covered in this chapter include checking refrigerant charge, repairing refrigerant leaks, evacuating a system, and charging a system with refrigerant.

Videos

- Recovering Refrigerant
- Evacuation/Pulling a Vacuum
- Charging a System

11.1 Checking Refrigerant Charge

The correct refrigerant charge is very important. In undercharged systems, the compressor is overworked and may operate continuously, which leads to poor refrigeration and wasted electrical energy. A lack of refrigerant also results in an increase in liquid line and drier temperatures (a result of high-side refrigerant not condensing due to low pressure). As the drier heats up, some of the moisture it has collected may be released back into the system.

An overcharged system has more refrigerant occupying the same volume as a properly charged machine. An overcharge causes excessive head pressure in systems with a thermostatic expansion valve metering device. In an overcharged system with a capillary tube metering device, liquid refrigerant may be forced into the compressor, which may cause severe compressor damage.

There are a number of ways to determine if a refrigeration system has the right amount of refrigerant. The following sections cover two of the most common processes: checking charge by subcooling and checking charge by superheat. The subcooling method is generally used to check the charge in systems with thermostatic expansion valves. The superheat method is used to check the charge in systems with fixed orifice metering devices, such as capillary tubes. These methods can be used to check refrigerant charge as part of the troubleshooting process or after system charging to ensure that the proper quantity of refrigerant has been added to the system.

A number of other methods may be used to perform quick checks of different types of refrigeration systems. These methods will be addressed in the appropriate service chapters.

11.1.1 Checking Refrigerant Charge by Subcooling

Subcooling is used for checking refrigerant charge in a system that uses a thermostatic expansion valve as its metering device. ***Subcooling*** refers to the amount of heat removed from a refrigerant after it has condensed. It is equal to the temperature drop of refrigerant in the liquid line from high-side saturation temperature, which is the temperature at which high-side refrigerant vapor condenses into a liquid. Subcooling can be determined by measurement and calculation. Check high-side pressure, consult a P/T chart for the corresponding temperature, and measure liquid line temperature. Subtract the two temperature values for system subcooling. Most systems are designed for a subcooling value between 10°F and 20°F.

The amount of subcooling that occurs on the high side of a refrigeration system determines the amount of refrigerant that will flash vaporize when it enters the evaporator. This is important because less flash gas means more liquid refrigerant in the evaporator. The more liquid refrigerant there is in the evaporator, the more heat the evaporator can absorb from a conditioned space. This equates to a higher cooling capacity. In other words, the more subcooling or the higher the value of subcooling is, the greater the cooling capacity of a refrigeration system. This is the general principle; however, it is only true up to a point. A certain amount of flash gas is necessary in an evaporator. Also, systems are only designed to produce a specific amount of subcooling before some other variable is affected that will reduce capacity or efficiency in another way.

Checking Refrigerant Charge by Subcooling

1. Turn on the refrigeration system and let it run for ten or fifteen minutes. Ensure that there is proper airflow through the condenser and evaporator coils.
2. Take a head (high-side) pressure measurement: _____ psi.
3. Use the head pressure measurement to determine the temperature of the refrigerant in the condenser. There are two ways of doing this. Some high-pressure gauges have displays showing saturated refrigerant temperatures that correspond with a pressure measurement. If your gauge does not have this, check a pressure-temperature (P/T) chart that shows the corresponding values for the refrigerant in the system. Record saturation temperature: _____°F.
4. Measure the temperature of the liquid line near the metering device. When using a temperature probe, firmly attach the probe to the pipe and insulate the probe to get an accurate reading not affected by the surrounding temperature, **Figure 11-1**. Record liquid line temperature: _____°F.
5. To determine the subcooling value, subtract the measured liquid line temperature from saturation temperature value. Subcooling = _____°F.

   Saturation temperature – Liquid line temperature = Subcooling
6. Look up and record manufacturer subcooling value: _____°F.

Copyright Goodheart-Willcox Co., Inc.

Mastercool Inc.

Figure 11-1. Superheat/subcooling calculators can also be used. These include a temperature probe and can compute answers using measured temperature and pressure value entered based on refrigerant type.

7. Compare the calculated subcooling value with manufacturer specifications. Record any difference: ____°F.

If subcooling is too low, it may indicate that there is not enough refrigerant in the system. If subcooling is too high, it may indicate that there is too much refrigerant in the system.

For example, the pressure measurement in the condenser of a system charged with R-410A is 446 psig. Using a pressure-temperature chart, you can determine that the temperature of the saturated liquid in the condenser is around 125°F. The temperature of the refrigerant in the liquid line near the metering device is 100°F. This means the subcooling value is 25°F. Check the manufacturer's specifications to see if a subcooling value of 25°F is acceptable.

11.1.2 Checking Refrigerant Charge by Superheat

Superheat is commonly used for checking refrigerant charge in systems with a capillary tube or fixed orifice metering device. ***Superheat*** refers to the amount of heat added to a refrigerant after it has evaporated. It is the sensible heat over saturation temperature. The procedure consists of comparing the superheat calculated from measured values to the target superheat based on those values. This procedure requires the technician to measure the following four values:

- Ambient air dry-bulb temperature at the condenser.
- Wet-bulb temperature of the return air just before the evaporator.
- Pressure of the refrigerant in the evaporator.
- Temperature of the refrigerant at the suction line service valve.

The target superheat is the ideal superheat for the measured dry-bulb and wet-bulb air temperatures. The target superheat is typically looked up on a table, **Figure 11-2**. Once the target superheat is found, it is compared to the actual superheat, which is determined by the evaporator pressure and suction line temperature.

4

Checking Refrigerant Charge by Superheat

1. Turn on the refrigeration system and let it run for ten or fifteen minutes.
2. Ensure that there is proper airflow across the condenser and evaporator coils.
3. Measure the dry-bulb temperature of the ambient air surrounding the condenser coil. Record dry-bulb temperature: ____°F.
4. Measure the wet-bulb temperature of the return air just upstream from the evaporator coil. Record wet-bulb temperature: ____°F.
5. Look up the target superheat for the system based on the temperatures of the ambient air outside and return air inside. Record target superheat: ____°F.
6. Take an evaporator (low-side) pressure measurement: _____ psi.
7. Use the evaporator pressure measurement to determine the saturation temperature of the refrigerant in the evaporator. There are two ways of doing this. Some compound gauges have displays showing saturated refrigerant temperatures that correspond with a pressure measurement. If your gauge does not have this, check a pressure-temperature chart that shows the corresponding values. Record saturation temperature: ____°F.
8. Measure the temperature of the suction line near the compressor. When using a thermometer with a sensing probe, secure the probe to a flat, clean area of the suction line and wrap it in insulation. This practice will prevent ambient air from affecting the temperature reading. Superheat/subcooling calculators are useful for this step, **Figure 11-3**. Record suction line temperature: ____°F.

Copyright Goodheart-Willcox Co., Inc.

Target Superheat														
Condenser Dry-Bulb Temperature (°F)	Return Air Wet-Bulb Temperature (°F)													
	50	52	54	56	58	60	62	64	66	68	70	72	74	76
55	8.8	11.5	14.2	17.1	20.0	23.1	26.2	29.4	32.4	35.1	37.7	40.2	42.7	45.0
60	7.0	9.8	12.6	15.4	18.2	21.0	23.8	26.6	29.6	32.4	35.1	37.8	40.4	42.9
65		7.0	10.0	12.9	15.8	18.5	21.2	23.8	26.7	29.7	32.5	35.3	38.1	40.8
70			6.4	9.7	12.7	15.7	18.4	20.9	23.9	27.0	30.0	33.0	35.9	38.7
75				5.6	9.2	12.4	15.3	18.0	21.1	24.3	27.5	30.6	33.7	36.7
80						8.7	12.0	15.0	18.3	21.7	25.0	28.3	31.6	34.8
85							8.5	11.9	15.5	19.0	22.6	26.0	29.5	32.9
90								8.8	12.8	16.5	20.1	23.8	27.5	31.1
95								5.6	10.0	13.9	17.8	21.6	25.5	29.4
100									7.3	11.4	15.4	19.5	23.6	27.7
105										8.8	13.1	17.4	21.7	26.0
110										6.4	10.8	15.3	19.9	24.4
115											8.6	13.3	18.1	22.9

Adapted from 2005 Residential ACM Manual

Figure 11-2. This chart shows the target superheat for a system based on the condenser dry-bulb and return air wet-bulb temperatures. To locate the target superheat for a system, determine the two temperatures and find the intersection of the dry-bulb temperature row and the wet-bulb temperature column.

9. Subtract evaporator saturation temperature, determined by the pressure measurement, from the temperature of the suction line near the compressor to determine the superheat value: ____°F.

   Suction line temperature – Evaporator temperature = Superheat

10. Compare the calculated superheat value to the target superheat for the measured wet-bulb and dry-bulb temperatures. Record any difference: ____°F.

    If the superheat is low, the problem could be a malfunctioning metering device, inadequate airflow through the evaporator, or an excessive refrigerant charge. If the superheat reading is too high, the problem could be a restriction in the liquid line, a malfunctioning metering device, moisture in the system, an excessive heat load, or an insufficient refrigerant charge.

For example, the pressure measurement in the evaporator of a system charged with R-410A is 88 psig. Using a P/T chart, you can determine that the temperature of the saturated vapor in the evaporator is around 25°F. The measured temperature of the refrigerant in the suction line near the compressor is 52°F. This means the superheat value is 27°F. Use the measured wet-bulb and dry-bulb temperatures to find the

Ritchie Engineering Co., Inc. – YELLOW JACKET Products Division

Figure 11-3. Superheat/subcooling calculators often include software for P/T charts for multiple refrigerants.

Copyright Goodheart-Willcox Co., Inc.

target superheat, and determine if a superheat of 27°F is acceptable.

11.2 Redistributing Refrigerant

There are occasions in HVACR service when refrigerant needs to be moved within or removed from a system. Depending on the system and area being serviced, it may be possible to remove all the refrigerant from one part of the system and store it in another part of the system prior to service. This allows one portion of the system to be opened for service and saves the technician the time it would take to recover the refrigerant, pull a vacuum, and recharge the refrigerant. This procedure is commonly referred to as "pumping down the system" by storing the refrigerant in the liquid receiver or condenser and liquid line. Liquid receivers are commonly found on commercial refrigeration machines, such as those for walk-in coolers or display cases. If it is not possible to isolate the work area by pumping down, the refrigerant must be recovered from the system prior to service.

11.2.1 Pumping Down a Refrigeration System

A ***pump-down*** is a procedure that involves relocating a system's entire refrigerant charge into its liquid receiver. With the liquid receiver service valve front seated, refrigerant will not be able to exit the liquid receiver. The compressor is used to pump most of the system's refrigerant into the liquid receiver. Pump-down procedures are useful when repairing leaks, adjusting low-side pressure controls, and replacing components, such as various valves and filter-driers. Performing a pump-down is a sensible alternative to recovering a system's refrigerant when service requires the low side of a system be opened to the atmosphere, **Figure 11-4**.

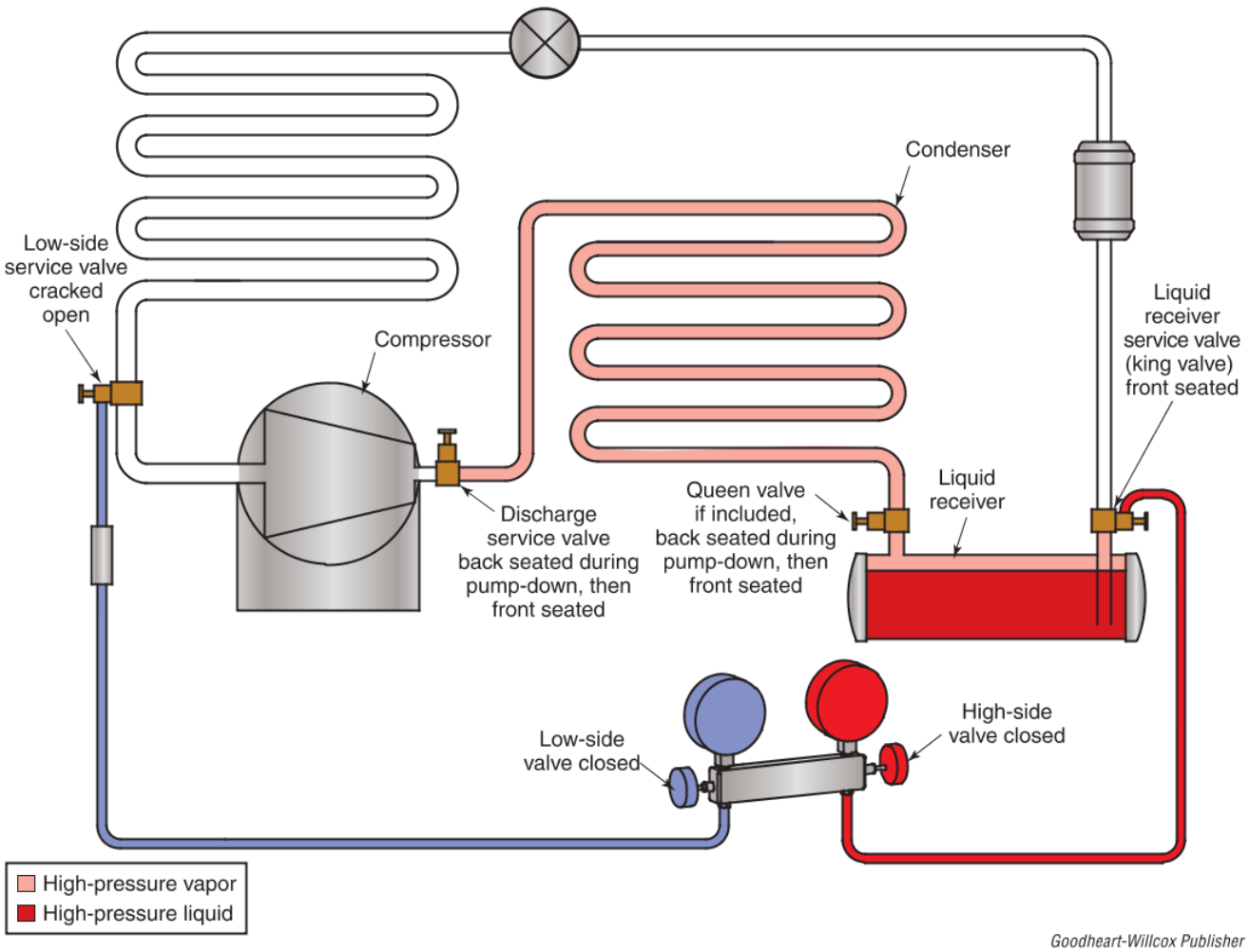

Goodheart-Willcox Publisher

Figure 11-4. Pumping down a system. Arrange the system as shown. When the compound gauge reads 0 psi, front seat the high-side service valve.

Copyright Goodheart-Willcox Co., Inc.

Pumping Down the System

1. With the refrigeration system cycled off, front seat the liquid receiver service valve by turning the valve stem clockwise as far as it will go.
2. Attach a compound gauge to a low-side service valve and crack the valve open.
3. Cycle the compressor on.
4. Monitor the low-side pressure on the compound gauge.
5. When the low-side pressure is 0 psi, cycle off the compressor and quickly front seat the discharge service valve to trap the refrigerant in the condenser and liquid receiver. If the system has a queen valve, front seat that valve.

11.2.2 Refrigerant Recovery Concepts and Procedures

Refrigerant recovery is the removal of refrigerant from a refrigeration system in whatever condition that refrigerant may be. Among the different methods of refrigerant recovery, procedural steps vary significantly. The operation of refrigerant recovery machines may also vary for each make and model. Sequential steps must be followed during a recovery process. In general, the stages of a recovery job will proceed as shown in **Figure 11-5**.

Recovery methods are generally divided into two categories: passive and active. Passive recovery uses the pressure of a refrigeration system to recover the refrigerant. ***Active recovery*** uses a recovery machine's compressor to draw out a system's refrigerant charge. Passive recovery methods are generally used less frequently than active recovery methods.

Passive Recovery

Passive recovery is a process of recovering vapor refrigerant from a system using that system's static pressure to force vapor refrigerant into an unpressurized recovery container. The passive recovery method is generally used on smaller systems with charges of 5 lb of refrigerant or less. Such systems include combination refrigerator-freezers, room air conditioners, water coolers, drinking fountains, ice machines, vending machines, and other small systems.

If the compressor is operational, it may be used to pump the refrigerant out of the system. No recovery machine is employed. A technician connects the refrigeration system to an unpressurized recovery container, often a special type of refrigerant recovery bag, **Figure 11-6**.

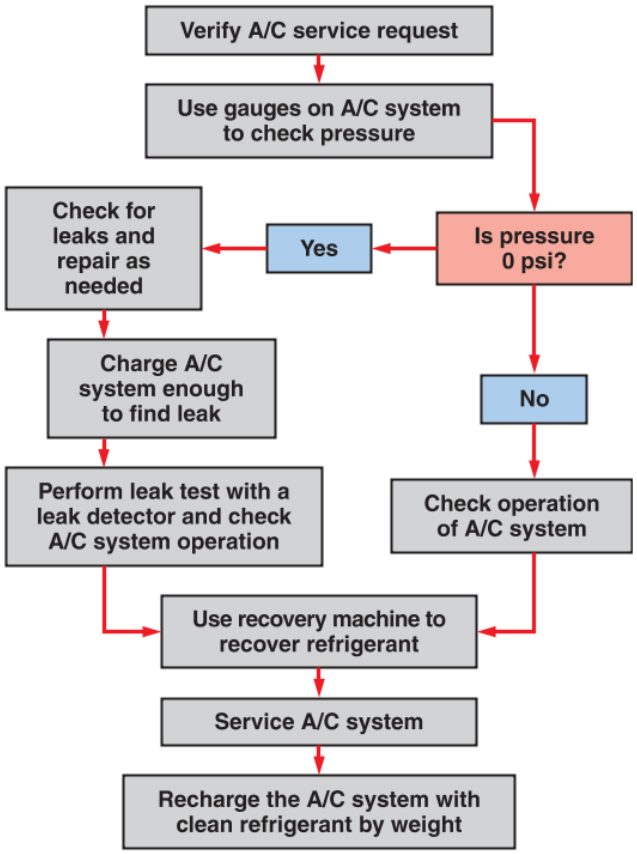

Goodheart-Willcox Publisher

Figure 11-5. The general steps to follow on a service call to determine if refrigerant needs to be recovered to perform service procedures.

Passive Recovery Procedure Using the Compressor

Use the following procedure to pump refrigerant from the high side of the system into a recovery bag using the system compressor.

1. Turn off the refrigeration system.
2. Attach a refrigerant hose to the high side of the system. If no access to the system is available, use piercing valves.
3. Attach the high-side hose to a recovery bag.
4. Open the high-side valve to fill the recovery bag. This may take 10–15 minutes depending on system pressure.
5. Turn on the compressor to pump the remaining refrigerant into the bag.
6. Close the high-side valve and cap the refrigerant bag.

Copyright Goodheart-Willcox Co., Inc.

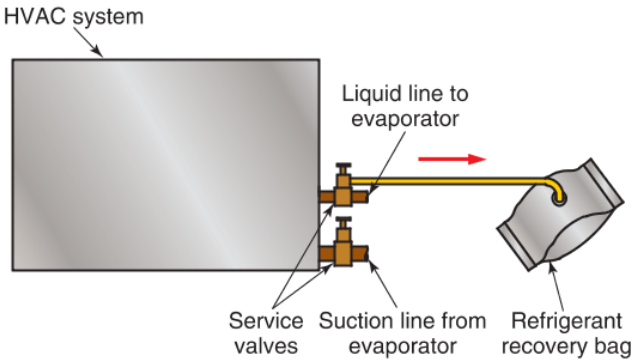

Goodheart-Willcox Publisher

Figure 11-6. A refrigerant recovery bag is an unpressurized container used for passive refrigerant recovery. The higher pressure inside the refrigeration system forces refrigerant into the lower pressure of the recovery bag.

If a compressor is not operational, a few simple techniques can be performed to improve the speed and efficiency of passive refrigerant recovery. These techniques are mostly based on the laws of physics regarding pressure and temperature, which were explained in Chapter 5, *Gases*.

Passive recovery begins with the internal pressure of a refrigeration system forcing vapor into the recovery container because the system has a higher pressure. However, as this happens, the recovery container's pressure rises. Eventually, the pressures will equalize. Once the pressures equalize, recovery ends with some of the refrigerant vapor still in the system.

The principles of the combined gas law can be applied to get even more refrigerant from the system into the recovery container. By placing the recovery container in an ice and water bath, you can lower its temperature, which in turn, lowers its pressure. Lowering the recovery container's pressure causes more vapor refrigerant from the refrigeration system to flow into the recovery container.

Raising the refrigeration system's temperature (and therefore its pressure) also causes more vapor refrigerant to push into the recovery container. Using crankcase heaters, electric blankets, defrost heaters, heat guns, or heat lamps to warm a compressor is the safest method of applying heat to raise the pressure in a system.

Caution

Warming Parts of a System

Never use an open flame from a torch to warm a compressor or other part of a system to increase the system pressure. Using a torch to simply warm parts of a system is dangerous and could cause damage.

Passive Recovery Procedure without the Compressor

1. Make sure the refrigeration system is off and unplugged.
2. Attach a gauge manifold to the low side and high side of the system. If no access to the system is available, add piercing valves.
3. Connect the refrigerant bag to the center port of the gauge manifold. Keep the refrigerant bag in an ice water bath to keep its pressure low.
4. Open both low- and high-side valves on the gauge manifold to allow refrigerant to flow into the recovery bag.
5. Heat the compressor to remove additional refrigerant.
6. Gently tap on the compressor using a mallet made of rubber, leather, or soft wood to release refrigerant dissolved in oil in the compressor.
7. After as much refrigerant has been recovered as possible, close the piercing valves or low- and high-side service valves.
8. Close off the gauge manifold valves and cap the refrigerant bag.

Vapor Recovery

The ***vapor recovery method*** is a form of *active recovery*, because it recovers vapor refrigerant from a refrigeration system by drawing it out with a recovery machine. Using the vapor recovery method, a technician can remove refrigerant from light commercial, automotive, and residential systems. Vapor recovery procedures may vary depending on the manufacturer of the refrigeration system.

Vapor refrigerant is drawn out of a refrigeration system and into a gauge manifold. The gauge manifold allows a technician to recover from both sides of the refrigeration system at the same time. Vapor refrigerant from the low side and the high side mixes in the gauge manifold central chamber and exits the gauge manifold. Next, the vapor flows through an in-line filter-drier before entering the recovery machine. A compressor in the recovery machine compresses the vapor refrigerant and forces it through the recovery machine's condenser where the refrigerant releases enough heat to turn into liquid. The liquid refrigerant flows out of the recovery machine and into a recovery cylinder, **Figure 11-7**.

Copyright Goodheart-Willcox Co., Inc.

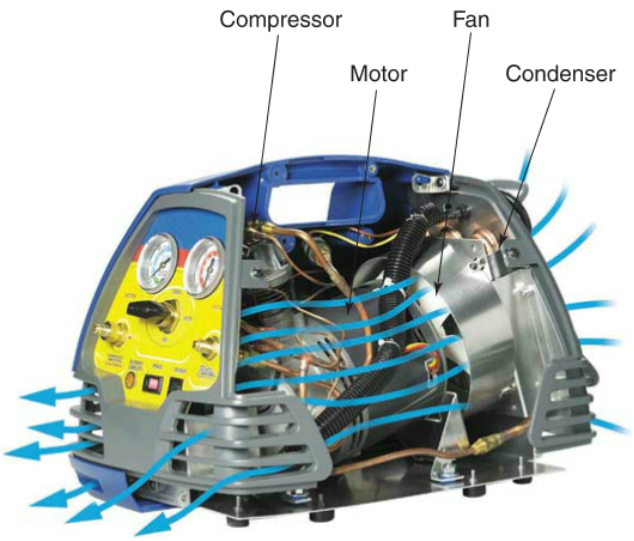

Ritchie Engineering Co., Inc. – YELLOW JACKET Products Division

Figure 11-7. Casing removed from recovery machine. Its compressor draws in refrigerant and passes it through the condenser at the back. A fan creates airflow through the machine to cool and condense recovered refrigerant into liquid before it exits to the recovery cylinder.

Vapor Refrigerant Recovery Procedure

For this procedure, refer to **Figure 11-8** and your recovery machine's operating manual.

1. If the system is operational, run the compressor for a few minutes to circulate the refrigerant and evaporate any dissolved refrigerant out of the oil in the system.
2. Turn off power to the refrigeration system.
3. To prevent overfilling, connect the recovery unit's 80% overfill cord to the recovery cylinder. Note that not all recovery units and recovery cylinders are equipped with this safety feature.
4. Connect the gauge manifold and recovery machine to the system and set the valves to their proper positions. Note that the low- and high-side service valves should be in mid-position and both gauge manifold valves should be opened fully (back seated). Consult the operating manual for your recovery machine for information on how to position its control and shutoff valves.
5. Set up a digital charging scale to monitor the recovery cylinder's weight. Find the cylinder's tare weight (weight of the empty cylinder), and calculate the total maximum weight the recovery cylinder and refrigerant can weigh.
6. Switch on the recovery machine.
7. As the recovery machine is operating, make sure the weight of refrigerant in the cylinder does not exceed the safe limit.
8. Watch the gauges on the gauge manifold for a vacuum reading. Refer to your recovery machine's operating manual for the proper vacuum level. When the proper vacuum level is reached, turn off the recovery machine.
9. When the recovery is completed, close the low-side service valve.
10. Write down the pressure reading of the system: _____.
11. Let the system and recovery machine sit for about five minutes.
12. Read the pressure of the system and compare it to the previous reading that was written down. If the pressure has risen 10 psi or more, there may be pockets of cold refrigerant still in the system. In that case, repeat the last five steps of this procedure until the final pressure reading remains steady after five minutes of system rest.
13. If there is still refrigerant in the system, run the recovery machine while chilling the recovery cylinder and heating the compressor to remove the residual refrigerant.
14. Close the gauge manifold valves, turn off the recovery machine, and close the recovery cylinder.

Liquid Recovery

The ***liquid recovery method*** is an active recovery process that uses a recovery machine to recover refrigerant in liquid form from the high side of a refrigeration system. Liquid recovery moves more refrigerant faster than vapor recovery. However, since not all the refrigerant in a system is in liquid form, liquid recovery must be followed by vapor recovery in order to remove a system's entire refrigerant charge. By properly arranging the hoses connecting the gauge manifold, refrigeration system, and recovery machine, a technician can set up for liquid recovery and vapor recovery without having to disconnect any hoses between procedures.

Caution

Liquid Recovery Method

The liquid recovery method should not be used on all systems. Do not use liquid recovery on either heat pump systems or systems with less than ten pounds of refrigerant.

Copyright Goodheart-Willcox Co., Inc.

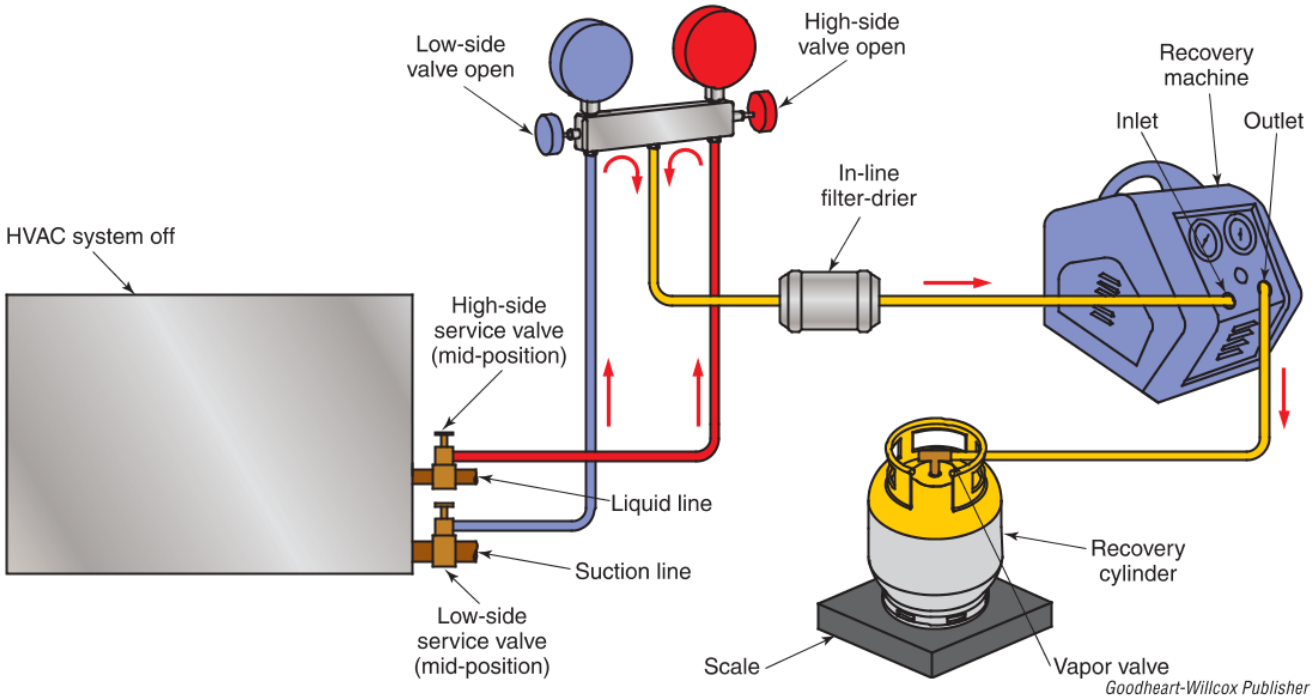

Figure 11-8. Using a gauge manifold and recovery machine, a technician can perform vapor recovery without disconnecting any hoses during the process.

Caution

Liquid Recovery Capability

Not all recovery machines are designed for liquid recovery. Attempting to recover liquid into a recovery machine without this capability could seriously damage the recovery machine's compressor. A recovery machine that can recover liquid refrigerant has a restriction that operates like a metering device by flashing liquid refrigerant into vapor before it is pumped through the recovery machine's compressor. Before attempting this procedure, always refer to the recovery machine's operating manual to determine if it is capable of liquid recovery.

Liquid Refrigerant Recovery Procedure

For this procedure, refer to **Figure 11-9** and your recovery machine's operating manual. Be sure that the machine being used is capable of direct liquid recovery.

1. Turn off power to the refrigeration system.
2. Connect the system as shown in **Figure 11-9**.
3. To prevent overfilling, connect the recovery unit's 80% overfill cord to the recovery cylinder, if it is equipped with a properly operating level switch safety device.
4. Set up a digital charging scale to monitor the recovery cylinder's weight. Remember to find the cylinder tare weight, and calculate the total maximum weight the recovery cylinder and refrigerant can weigh.
5. Position the recovery machine's control valves for direct liquid recovery after referring to the operator's manual for specific instructions.
6. Switch on the recovery machine.
7. Watch the sight glass and pressure gauges on the gauge manifold and on the recovery machine. Monitor how cold the filter-drier, hose, and hose connectors are between the gauge manifold and recovery machine inlet by feeling them. The recovery machine has begun pumping vapor refrigerant when the pressure on the high-pressure gauge of the manifold has dropped, and the hose connectors and gauge manifold no longer feel as cold as previously.
8. Fully open the low-side valve on the gauge manifold to begin recovering vapor refrigerant from the low side of the refrigeration system. This step marks the switch from liquid recovery to vapor recovery. Complete the rest of the recovery procedure as if it were the vapor recovery method. If necessary, change any valves on the recovery machine according to manufacturer directions.

Copyright Goodheart-Willcox Co., Inc.

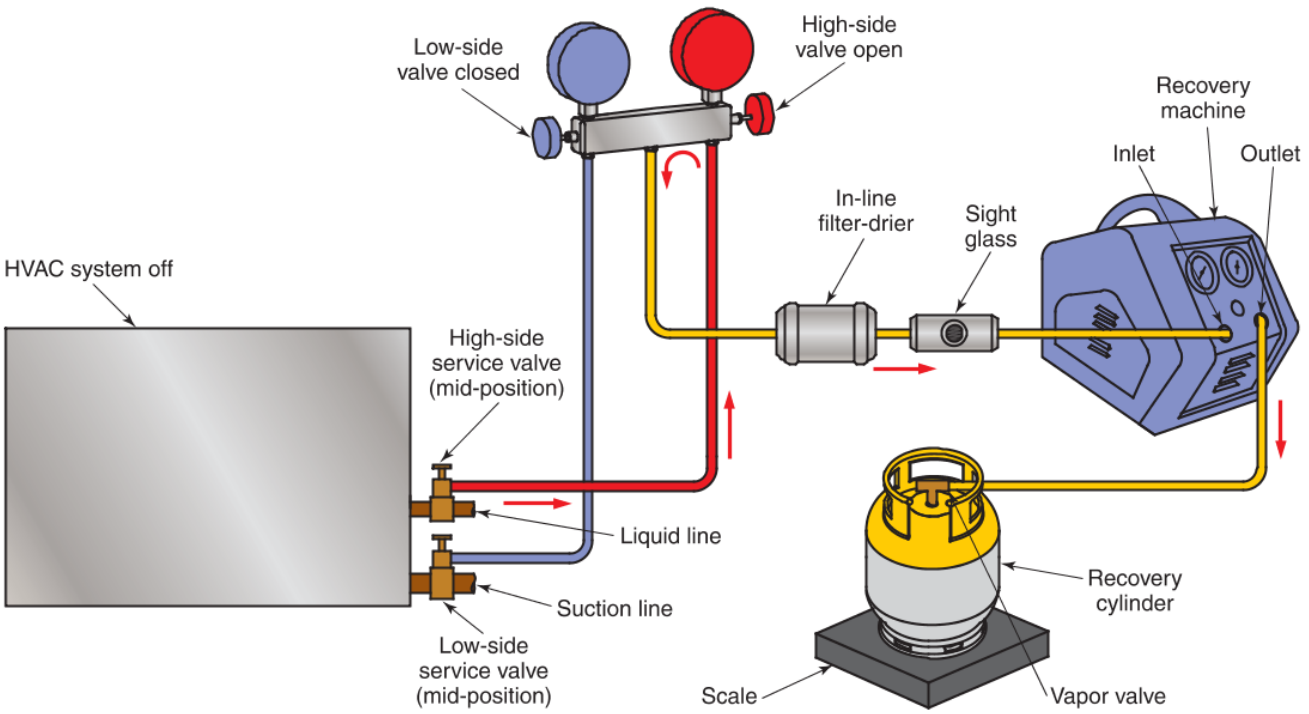

Goodheart-Willcox Publisher

Figure 11-9. The liquid recovery method draws as much liquid refrigerant as possible from the high side of the system before valve positions must be changed to complete the process using the vapor recovery method.

Push-Pull Liquid Recovery

The ***push-pull liquid recovery method*** is a process of removing liquid refrigerant from a refrigeration system by creating a pressure difference between the system and the recovery cylinder. When performing the push-pull liquid recovery method, a recovery machine creates low pressure in a recovery cylinder when it *pulls* vapor refrigerant out of the cylinder. Then, the machine pumps the vapor at a high pressure into the refrigeration system where the vapor *pushes* out liquid refrigerant into the low-pressure recovery cylinder.

The push-pull method creates a drastic pressure difference by lowering the pressure in the recovery cylinder and raising the pressure in the refrigeration system. However, this method cannot recover a system's entire refrigerant charge, because it is constantly using that charge to force more refrigerant out. Eventually, a recovery machine will reach a point where as much liquid as possible can be pumped out and the amount of refrigerant pumped into the recovery cylinder is equal to the amount of vapor pumped out. At that point, a technician will need to change the setup and complete the recovery using the vapor recovery method. Although the push-pull liquid recovery method moves more refrigerant faster than the vapor recovery method, it cannot remove a system's entire refrigerant charge.

The push-pull liquid recovery method uses a recovery cylinder's vapor valve and a liquid valve at the same time. The recovery cylinder's vapor valve is connected to the recovery machine's inlet. The recovery cylinder's liquid valve is connected to the high side of a refrigeration system.

The push-pull recovery method *cannot* be used in the following circumstances:

- If a system's charge is under a minimum amount of refrigerant, usually 5 to 10 lb (refer to the operating manual for your recovery machine model).
- If a refrigeration system is a heat pump or uses a reversing valve, which is discussed in Chapter 40, *Heat Pumps*.
- If an accumulator is located in the refrigerant circuit.
- When a refrigeration system cannot maintain a steady column of liquid refrigerant.

Push-Pull Liquid Recovery Procedure

Before beginning this procedure, check to see if the recovery cylinder to be used contains any refrigerant. The recovery cylinder must have some refrigerant already inside that can be pulled into the recovery machine and pushed into the refrigeration system at the start of push-pull recovery. Usually less than one pound is sufficient, depending on the recovery machine

Copyright Goodheart-Willcox Co., Inc.

size. Some refrigerant vapor from the system can be passively allowed in for this purpose.

1. Disconnect power to the refrigeration system.
2. Connect the hoses and components as shown in **Figure 11-10**. Both the high-side and low-side service valves should be opened to mid-position.
3. Purge all the hoses. Refer to the recovery machine's operating manual for specific instructions.
4. Open the liquid and vapor valves on the recovery cylinder.
5. Refer to manufacturer instructions to adjust the recovery machine to its proper valve settings. Often this involves opening both inlet and outlet port valves and turning an operations valve to a *Vapor* or *Purge* setting.
6. Turn on the recovery machine.
7. Monitor the sight glass in the service line to the recovery cylinder. The refrigerant should be a steady flow of liquid. Watch for bubbles, which indicate that liquid is no longer flowing.
8. When liquid is no longer flowing through the sight glass, turn off the recovery machine.
9. Reconfigure the hoses and system setup for vapor recovery.

Recovery Tips

There are a few general practices that help all active recovery procedures flow efficiently, quickly, and safely. In general, the bigger the hose diameter is, the faster the recovery. Larger hoses allow more refrigerant to flow than smaller hoses. Also, the shorter the hose is the better. Less distance requires less pressure and quickens vapor travel. Less distance also produces less resistance and pressure drop. Schrader valve cores in access ports and service valves should be removed with a valve core remover to reduce resistance and allow more flow.

To protect the recovery machine's compressor, always place an in-line filter-drier between the refrigeration system and the recovery machine's inlet port. This will prevent contamination or particulates in a refrigeration system from entering the recovery machine.

4

Caution

Recovery Burn-Out Oil

After a recovery machine is used to recover refrigerant from a burned-out system, its compressor oil should be changed. However, note that many modern recovery machines use oil-less compressors.

Pro Tip

Retrofit Recovery

A recovery machine's compressor oil should also be changed before it is used to recover a refrigerant that is different from the last refrigerant recovered. The drier must be replaced, and the transfer machine and hoses must be evacuated before transferring a different refrigerant.

Recovery Cylinder Capacity

Recovery cylinders, like all refrigerant cylinders, are given capacity ratings. These ratings designate the maximum amount of liquid refrigerant a cylinder can

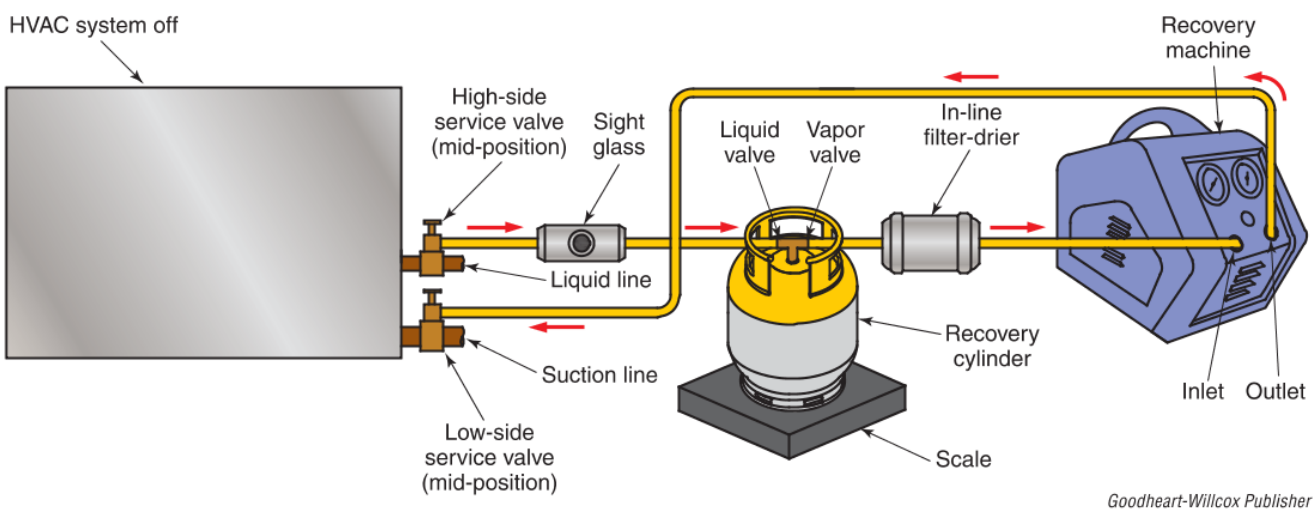

Goodheart-Willcox Publisher

Figure 11-10. The system and hose connections for performing push-pull liquid recovery. Push-pull liquid recovery cannot be used to recover all the refrigerant in a system, so the hoses must be reconfigured for vapor recovery to complete the recovery process.

Copyright Goodheart-Willcox Co., Inc.

safely accommodate. According to AHRI Guideline K, the formula for filling recovery cylinders is 80% water capacity by weight.

Code Alert

AHRI Guideline K

The Air-Conditioning, Heating, and Refrigeration Institute (AHRI) publishes industry standards and guidelines as a way to verify and compare product performance and specifications. Guideline K applies to refrigerant cylinders used to store and transport recovered refrigerants. Guideline K is regularly updated to reflect new research and information. AHRI provides a wide variety of information regarding standards and guidelines on its website.

Water capacity (WC) is the weight of the volume of water needed to fill an entire recovery cylinder of a given size. This amount is provided in pounds or kilograms of water capacity (*WC*, *WC LB*, or *WC KG*) on a recovery cylinder's label, **Figure 11-11**.

Earlier recovery cylinder standards stated that the proper fill level of a recovery cylinder was 80% of the water capacity. This meant that a cylinder that could hold 500 lb of water had a maximum capacity of 400 lb of refrigerant ($500 \times 0.8 = 400$). The newer standard is often termed *80% water capacity by weight*. The phrase *by weight* is the key.

AHRI Guideline K takes into account that each refrigerant has a different density. Since refrigerants have different densities, their weights will vary at 80% water capacity. Remember that water capacity is the *weight* of the *volume* of a full cylinder. If liquid refrigerant fills 80% of a cylinder and is less dense than water, it will weigh less than the same volume of water. If the refrigerant is denser than water, it will weigh more than the same volume of water. The denser a refrigerant is, the more it can weigh while being safely stored in a cylinder.

Steven Shepler

Figure 11-11. This recovery cylinder has a tare weight of 24.6 lb and a water capacity of 47.7 lb.

Technicians must calculate the weight of the volume of liquid refrigerant at 80% water capacity of a cylinder. This is done by multiplying three values together:

- The percentage of liquid that a cylinder should hold (80%, which is represented by 0.8)
- The water capacity number on the cylinder (in lb or kg)
- The specific gravity (SG) of the refrigerant being recovered.

This equation will produce the maximum weight of refrigerant that can safely be charged into a recovery cylinder:

$$W = 0.8 \times WC \times SG$$

W = weight of refrigerant that can be safely stored in cylinder
WC = weight of water that would fill the cylinder to 100% volume
SG = specific gravity of the refrigerant

Specific gravity is the ratio of the mass of the refrigerant to the mass of an equal volume of water under similar pressure and temperature conditions. In other words, it is a comparison of the density of the refrigerant in relation to the density of water. Since each refrigerant has a different density, a technician must look up a refrigerant's specific gravity in order to determine the weight of a given volume of refrigerant. This information is given in a refrigerant's specification sheet.

Technicians often charge recovery cylinders using scales. If the scale being used cannot zero out the weight of the cylinder, the technician must also add the tare weight of the cylinder to get the final weight value that the scale should read. The ***tare weight*** of a refrigerant cylinder is how much the cylinder weighs when empty. The maximum recovery cylinder weight formula would then be changed to the following:

$$W_C = [0.8 \times WC \times SG] + TW$$

W_C = maximum safe recovery cylinder weight
WC = weight of water that would fill the cylinder to 100% volume
SG = specific gravity of the refrigerant
TW = tare weight of the cylinder

Recovery Cylinder Safety Devices

As a recovery machine operates, the technician must ensure that the recovery cylinder is not overfilled. If the cylinder is filled to its safe limit before the

Copyright Goodheart-Willcox Co., Inc.

recovery process is complete, the technician must shut down the recovery process, replace the full cylinder with an empty cylinder, and begin the process again.

There are several different ways of monitoring the amount of refrigerant in the cylinder. If a digital charging scale is used and the maximum weight is reached, some scales will close the path between the recovery machine and the recovery cylinder by closing a solenoid valve. Other scales will sound an alarm or illuminate a light, signaling for the technician to stop the process.

If a recovery cylinder has a liquid level switch or high-pressure switch that is wired to the recovery machine, the machine will turn off when the recovery cylinder becomes 80% full, **Figure 11-12**. However, it is not good to rely on this function for turning off a recovery machine. It is designed as a safety precaution, not a regular shutoff. The mechanical parts of these safety devices could malfunction and cause unsafe conditions. Turning off a recovery machine manually is the preferred, and safest, method.

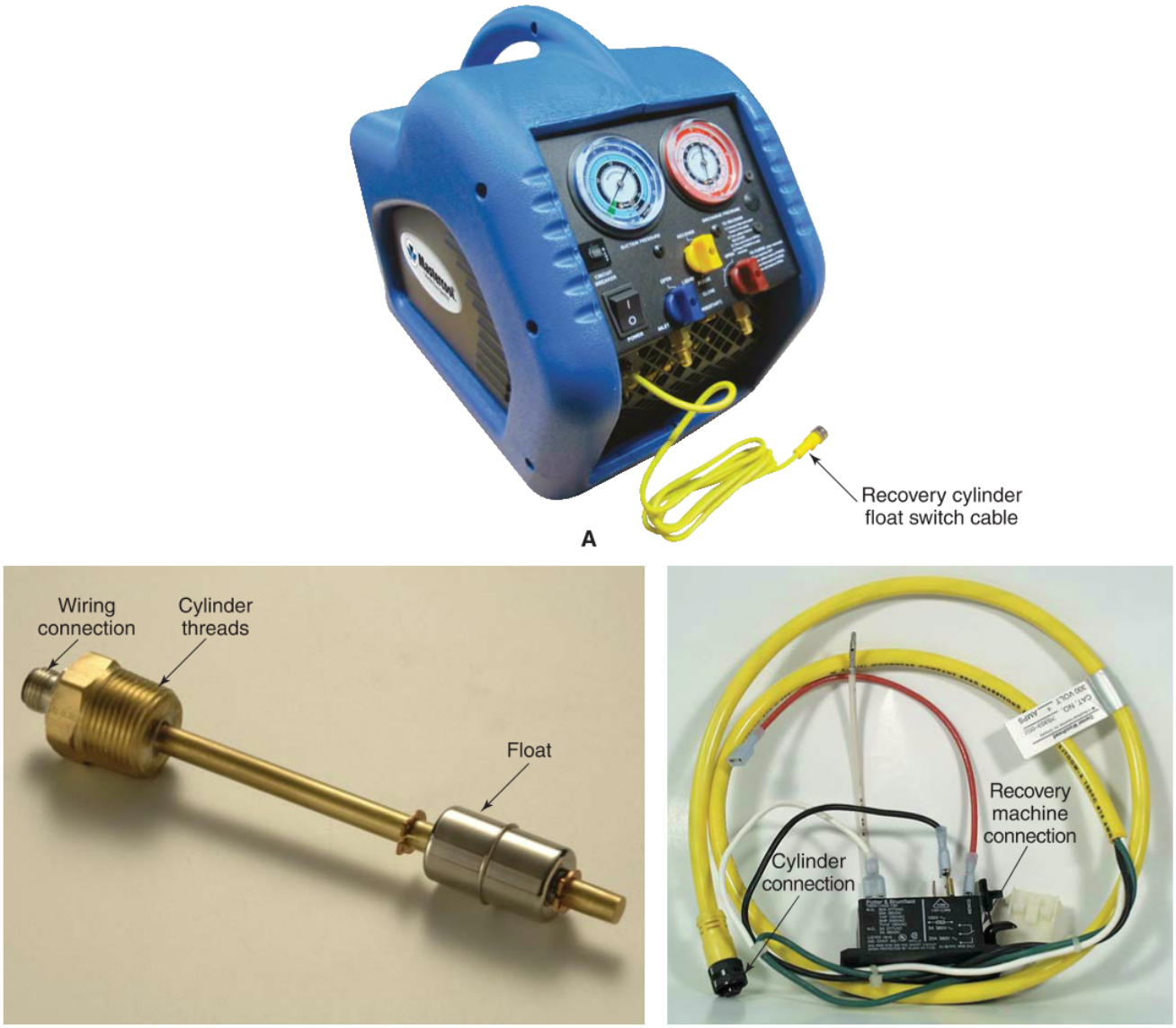

Mastercool Inc.; Manchester Tank; SPX Corporation

Figure 11-12. A—A recovery machine with a float switch cable to connect to a recovery cylinder. B—This liquid level switch is installed in a recovery cylinder and wired to a recovery machine. If the cylinder fills to a certain level, the switch turns on a warning light or alarm or it turns off the recovery machine. C—Wiring for a liquid level switch runs between the recovery cylinder and the recovery machine.

Copyright Goodheart-Willcox Co., Inc.

Checking a Recovery Cylinder Liquid Level Switch

Recovery cylinder overfill shutoffs may be actuated by either a high-pressure or a liquid level switch. This procedure is only for recovery cylinders with a liquid level switch. To check a recovery cylinder's liquid level switch, carefully follow the steps of this procedure.

1. Connect the electrical cable of the liquid level switch to a recovery cylinder that has a liquid level switch receptacle.
2. Turn the recovery cylinder upside-down. If the recovery cylinder has a built-in liquid tube, this may not be required.
3. Turn on the recovery machine.
4. The tank overfill light or signal should appear. If the recovery machine has an overfill shutoff, the recovery machine compressor should also cycle off.
5. If the tank overfill light does not illuminate or the recovery machine compressor does not cycle off, the liquid level shutoff system is not functioning properly.

If there is enough room in the recovery cylinder to safely hold the entire refrigerant charge from a system, then the recovery machine will turn off automatically when it reaches the proper vacuum, provided the recovery machine has a vacuum shutdown function. Otherwise, the technician will need to turn off the recovery machine when the proper vacuum measurement has been reached. Before beginning a recovery procedure, refer to the recovery machine's operating manual for specific instructions for using the equipment.

As a recovery cylinder is filling, its pressure should be watched. If only one recovery cylinder valve is being used during the recovery process, connect a pressure gauge to the other valve. This allows the technician to monitor recovery cylinder pressure. The gauge should not read above the cylinder service pressure.

Caution

Cylinder Capacity

Do *not* exceed a cylinder's capacity. Overfilling a refrigerant container may cause it to burst. Never use a torch or other heat source to warm a cylinder in order to increase the refrigerant pressure when charging a system. The pressure resulting from high temperatures could rupture the cylinder, endangering the technician and others.

11.3 Locating and Repairing Refrigerant Leaks

Low head pressure, low suction pressure, and a lack of cooling are all good indicators that a system has a leak. Most refrigerant recovery machines include a leak detection feature. The recovery machine pulls a vacuum on the system and uses a software algorithm that holds the vacuum for a predetermined time. If the refrigeration system does not hold the vacuum, an alarm will sound. This indicates a leak, but does not instruct the technician where the leak is located.

Methods for locating leaks vary with the refrigerant used. However, all methods have one procedure in common: applying pressure to the system. When a technician determines that a system has a leak, a gauge set should be attached to the system. If no pressure is present in the system, the refrigerant has entirely leaked out. The technician must then add pressure to the system to begin locating the leak. If the system contains refrigerant, leak testing may begin.

If the system does not contain refrigerant, an inert gas (such as nitrogen or carbon dioxide) is used to pressurize the system to check for leaks. It is always preferable to use an inert gas for leak detection before charging an empty system with more refrigerant to detect a leak. Refrigerants are much more expensive than nitrogen or carbon dioxide. If the entire refrigerant charge has not leaked out, however, use the refrigerant already in the system to test for leaks.

Safety Note

Proper Charging Gas for Leak Testing

Never use oxygen, acetylene, or any other fuel gases to develop pressure in refrigeration tubing, piping, or equipment. Oxygen will cause an explosion in the presence of oil. Acetylene will become unstable and explode at pressures over 15 psig.

The following inert gases may be used for developing pressures in refrigeration lines: carbon dioxide, nitrogen, and argon. These three inert gases are safe if used with a pressure regulator and a pressure-relief valve.

At the start of testing, a ***positive pressure*** (greater than atmospheric pressure) of 5 psig to 30 psig is necessary throughout the refrigeration system. Large leaks may be detected by an audible hissing sound or may easily be found using a bubble solution or ultrasonic detector. Smaller leaks may not be audible and will require the use of an electronic leak detector or other tool. Electronic leak detectors, halide torches, and refrigerant dye detect refrigerant vapor and will not detect nitrogen or other inert gases.

Copyright Goodheart-Willcox Co., Inc.

Locating a Refrigerant Leak

The following general sequence should be followed when searching for a refrigerant leak.

1. Attach a gauge manifold set to the system.
2. If there is refrigerant pressure in the system, listen for a leak and use an electronic leak detector or halide torch to find the leak. If no refrigerant is present, pressurize the system using an inert gas to the manufacturer's specified condensing pressure and listen for leaks.
3. If an audible leak is detected, use a bubble solution to pinpoint and confirm the location.
4. If the leak cannot be found using only an inert gas, vent the gas and hook up a recovery machine to the system.
5. Evacuate the system and then charge it with a small amount of refrigerant (approximately 10%) and an inert gas (90%) to raise pressure up to the manufacturer's specified condensing pressure.
6. Use an electronic leak detector or halide torch to find the leak.

11.3.1 Pressure Testing for Leaks

There are two methods for pressurizing a refrigeration system to test for leaks if the system's entire refrigerant charge has already leaked out. One method involves charging the system with an inert gas. The second method, used if the leak cannot be found with just an inert gas, involves evacuating the system and charging it with nitrogen and a small amount of its specified refrigerant (about 10%).

Testing with an inert gas, such as nitrogen or carbon dioxide, should be done with caution. The nitrogen cylinder is connected to a gauge manifold. The gauge manifold service hoses are connected to the low- and high-side service valves on the refrigeration system. Nitrogen is allowed to pressurize the system through both the high and low sides. It is safest to pressurize the system to the lowest normal operating head pressure. For example, in R-134a systems, a pressure on both sides less than 170 psig should be sufficient. Large systems, using a refrigerant such as R-410A, may operate at higher pressures.

Caution

Unknown System Testing Pressure

Before using nitrogen or carbon dioxide to test a system, look at the system nameplate. In most cases, it will give recommended testing pressures. If these pressures are not known, the pressure should not exceed 170 psig when testing with carbon dioxide or nitrogen.

Safety Note

High-Pressure Testing

A refrigeration system can explode if pressure is allowed to build up in the system. Many accidents have been caused by using too much testing pressure. When testing for leaks with either nitrogen or carbon dioxide, always install a pressure regulator and a pressure-relief valve between the cylinder and the system, **Figure 11-13**.

4

Caution

Accurately Calibrated Regulator

When blowing out lines and pressure testing with nitrogen or carbon dioxide, be certain that your pressure regulator is accurately calibrated. The relief valve should be designed to open at 180 psig.

Pressure Testing with an Inert Gas

This test requires the use of a cylinder of carbon dioxide, dry nitrogen, or some other inert gas. Only a high-pressure gauge from a gauge manifold should be installed on a system for this test. A compound gauge may be ruined by the pressure.

1. Recover any remaining refrigerant from the system.
2. Connect an inert gas cylinder, a pressure regulator, a pressure-relief valve, and a hand valve, as shown in **Figure 11-13**.
3. Build up a pressure of 30 psig to 100 psig in all parts of the system by charging the inert gas through the system. Close the cylinder valve after reaching the desired pressure.
4. Read the high-pressure gauge. If the gauge shows no drop in pressure after an hour, further test the system by raising the pressure.
5. Raise the pressure to 170 psig by opening the nitrogen cylinder.
6. Test the system again by ensuring that the system pressure does not drop. Do not exceed the pressures prescribed by the manufacturer's nameplate. Excessive pressure may rupture some part of the system.
7. Read the high-pressure gauge. If no decrease in pressure occurs after 24 hours, the system is leak-free and ready to be vented, evacuated, and then charged.
8. Close the nitrogen cylinder valve, the pressure regulator, and the hand valve installed between the nitrogen cylinder and the system.

Copyright Goodheart-Willcox Co., Inc.

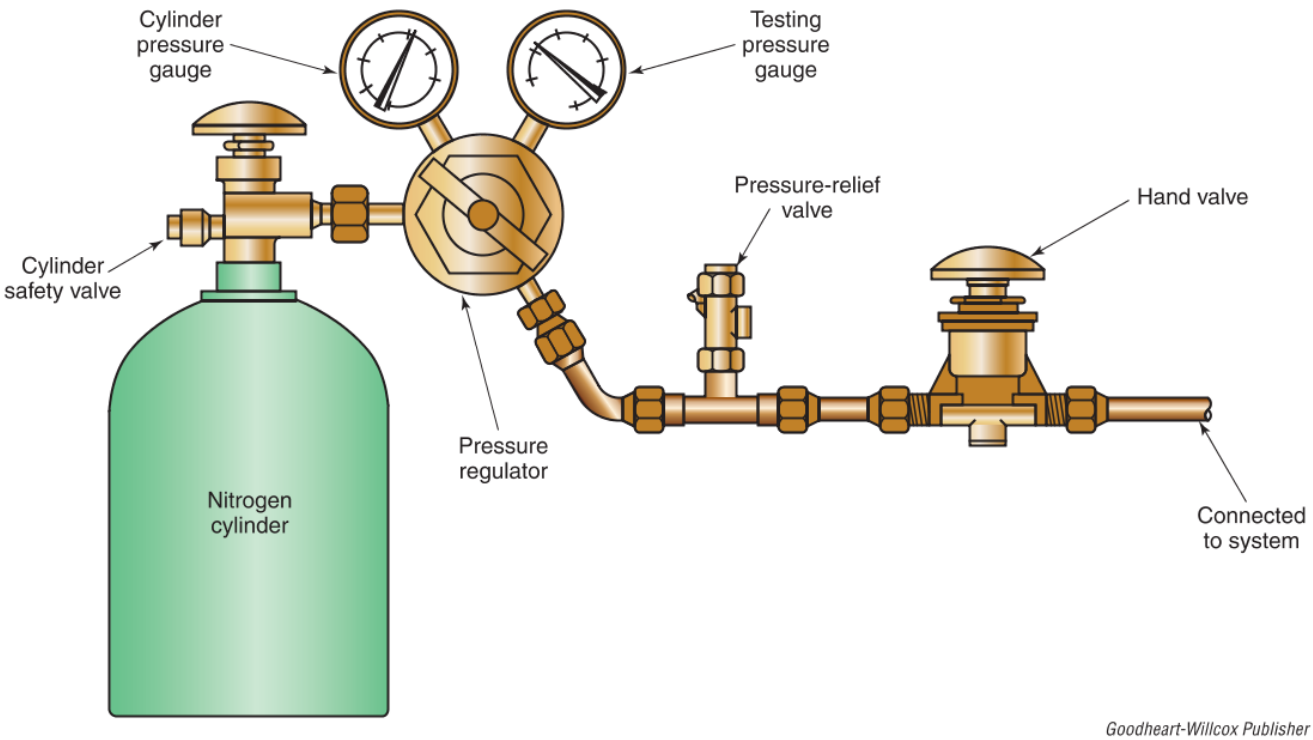

Goodheart-Willcox Publisher

Figure 11-13. A pressure regulator and pressure-relief valve must be installed between an inert gas cylinder and the system when pressure testing for leaks.

9. Disconnect the nitrogen cylinder and its accessories from the refrigeration system.
10. Purge the test gas from the system by removing the caps from the suction service valve and discharge service valve and setting their valve stems to mid-position.
11. Evacuate the system using the deep vacuum method or the triple evacuation method.
12. Charge the system with proper amount of the proper refrigerant. The system should be ready to operate.

If the system pressure drops after being charged with an inert gas, then the system has a leak. The technician should look for leaks at tubing connections using a bubble solution. The technician should also look for leaks near bent or crimped tubing, poorly constructed joints, or tubing that rubs against a moving part, such as an evaporator fan or condenser fan. For leaks at a flared connection, the tubing flare may not be correct, the flare nut may not be tightened adequately, or the flare nut threads may be stripped. It is best to remedy a leak at a flared connection by forming a new flare and installing a new flare fitting.

If a leak cannot be found after using a bubble solution to test areas that typically leak, then the system should be charged with refrigerant and nitrogen so that leak detecting devices, such as an electronic leak detector, can be used. Although it is illegal to knowingly vent refrigerant into the atmosphere, the EPA does allow refrigerant to be released when it is being used as a leak test gas.

Pressure Testing with the System's Refrigerant

To test for leaks using refrigerant, carefully follow the steps of this procedure.

1. Attach a gauge manifold to the high and low sides of the system. Connect the center port to a refrigerant cylinder.
2. Open the high-side valve just enough to build up a pressure of 15 psig to 30 psig throughout the system.
3. Test for leaks using one or more of the following methods: bubble solution, halide torch, or electronic leak detector.
4. If no leaks are detected at low pressure, increase the pressure by opening the high-side valve. Pressurize the system to the manufacturer's recommended high-side operating pressure and test again.
5. If a leak is found, recover the refrigerant in the system. It is not necessary to pull a vacuum at this time because the leak must be repaired first.

Copyright Goodheart-Willcox Co., Inc.

6. Open the system at the leak point and inspect all parts to identify the source of the leak.
7. If possible, cut out and replace a broken section of tubing. If a brazed joint is leaking, take it completely apart. Clean and reassemble. When brazing is required, purge the brazing area with a constant low-pressure flow of nitrogen to prevent any oxidation from forming. If the leak is in an aluminum evaporator, an epoxy patch may be required. Replace any defective parts, then clean and reassemble the system.
8. Repeat the leak detecting procedure. If no leaks are found, the system is ready to be evacuated, recharged, and returned to operation.

11.3.2 Repairing Leaks with Brazing

To repair a leak, recover the refrigerant from that part of the system. In some cases, the entire refrigerant charge will have to be recovered from the system. After recovering the refrigerant, check the system pressure to be sure it is 0 psig (neither having pressure nor being in vacuum). Purge the system with an inert gas, such as nitrogen, prior to brazing to flush any debris from the tubing. During brazing, arrange for a continuous low-pressure flow of nitrogen (1 to 2 psi) to pass through the part of the system being brazed. This prevents oxides from forming inside the tubing during brazing.

Caution

Recovery before Soldering/Brazing

Never braze a system with refrigerant in it. Heat may cause a breakdown of the refrigerant, which could create toxic fumes. Only inert gases, such as carbon dioxide or nitrogen, should be used in the system when brazing, as they are nonflammable. The inert gas should be allowed to flow through the system during brazing to prevent the brazing heat from building up pressure in the system and prevent any oxidation of the parts.

4

To braze the system using an inert gas, connect the inert gas (typically nitrogen) cylinder and refrigeration system as shown in **Figure 11-14**. The nitrogen cylinder connects to the system through an access port or service valve. Charge the system to 2–3 psi with the inert gas. Crack open the suction or low-side service valve to permit a continuous stream of gas flow. This prevents the pressure in the system from building up to dangerous levels due to the brazing heat. Always make certain that the inert gas tank is not located where it may be affected by the brazing torch.

Before repairing a leak with brazing, it is important to know what material the leaking parts of the system are made of. Refrigeration systems are made of copper, steel, or aluminum. Leaks can start in any part of the system. The type of repair made depends on the material that has failed or on the combination of materials at the leak. Steel

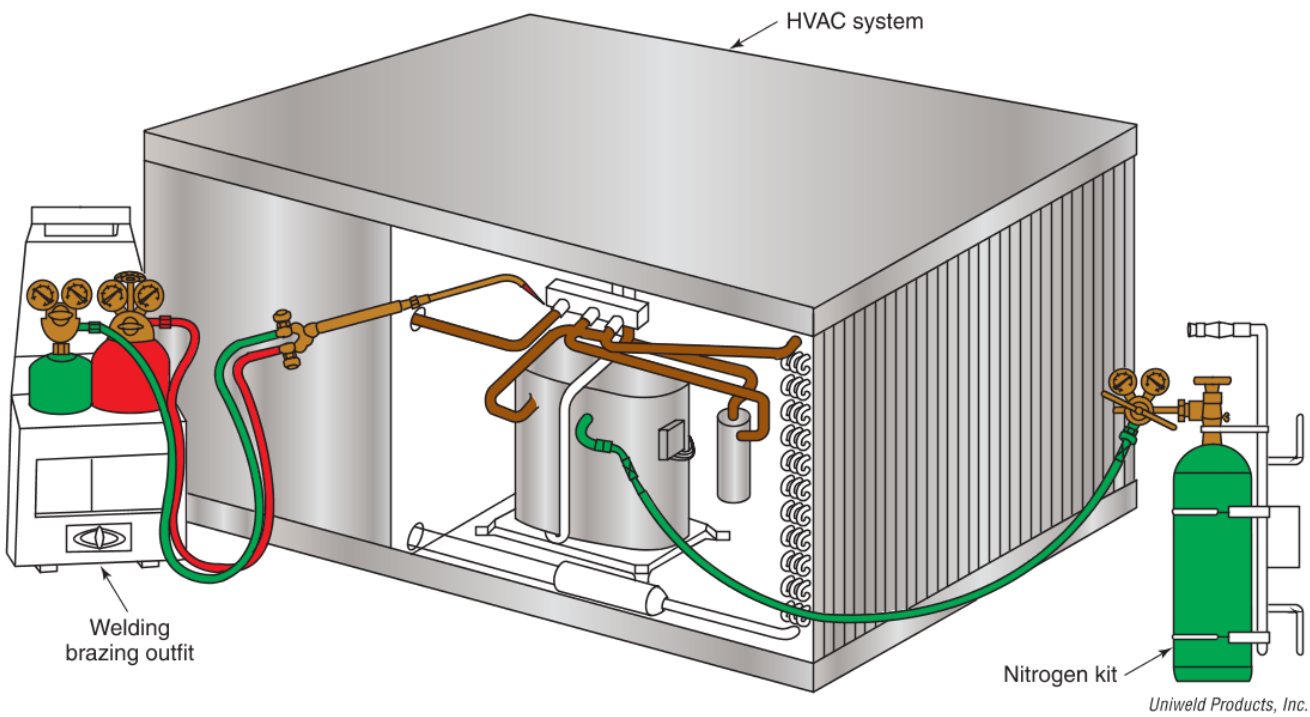

Uniweld Products, Inc.

Figure 11-14. After recovering the refrigerant and evacuating the system, pressurize it with 2–3 psi of nitrogen prior to brazing. Nitrogen can also be used to pressurize the system for leak testing.

Copyright Goodheart-Willcox Co., Inc.

and copper can be brazed; aluminum can be soldered or brazed. Aluminum can also be resistance welded to steel or copper or repaired with epoxy cement.

Pro Tip

Determining the System's Material

To find out what metal is used, scrape the surface. Steel is gray-white, hard, and magnetic. Use a small magnet to test it. Copper is reddish in color when scraped and is nonmagnetic. Aluminum is white, soft, and nonmagnetic.

Leakage at a brazed or silver-soldered connection can be repaired by cleaning the joint, coating it with flux, and reheating the area. Steel tubing usually has a lengthwise seam. This seam must be cleaned prior to brazing. Clean the seam by wire-brushing lengthwise or file off enough metal to remove the seam. If the fitting has been taken apart, clean, reflux, and install the fitting if there is no damage. If the fitting is defective, replace it. Heat the connection and solder or braze it in place. Avoid overheating other parts of the system. Never heat a drier. Heating a drier drives moisture out of it and into the system where it can freeze to block orifices or mix with oil to form corrosive acid.

Caution

Heat Damage from Brazing

Avoid damaging materials around the refrigeration system. Use a fire-resistant sheet material as a protective barrier between flammable surfaces and an open flame. This type of material is also used when the tubing is next to a metal side.

11.3.3 Repairing Leaks with Epoxy Resin

Epoxy resin is a thermosetting polymer that forms a strong adhesive. It may be used to repair cracks and leaks in evaporators and joints. Epoxy resin has good adhesion qualities when used with aluminum, steel, copper, and many plastics.

The most effective type of epoxy resin is the two-part system. This consists of an epoxy resin and a hardener in two jars or tubes, **Figure 11-15**. These two paste-like substances harden at room temperature when mixed together. One-part epoxies must be heated in order to harden, **Figure 11-16**.

The shelf life of most epoxy resins is about six months. Epoxy resins should be purchased from a refrigeration wholesaler because some epoxies available elsewhere may not be compatible with refrigerants. Always follow the epoxy manufacturer's recommendations and instructions when making repairs.

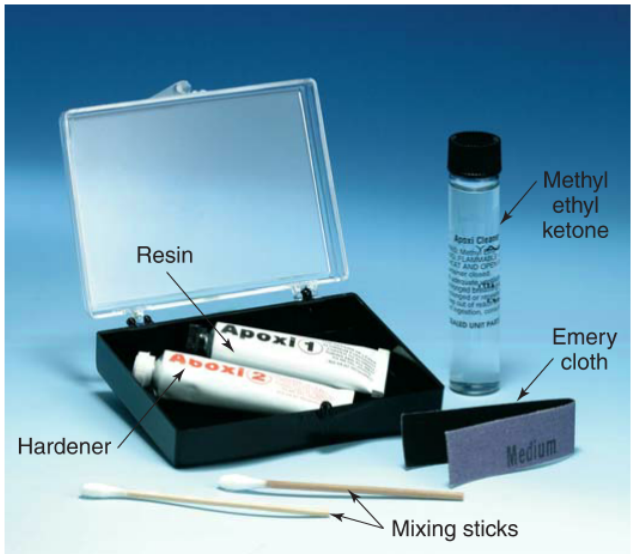

Sealed Unit Parts Co., Inc.

Figure 11-15. Epoxy repair kits are used for repairing leaks in aluminum, copper, and other metals.

LA-CO Industries Inc.

Figure 11-16. This one-part epoxy needs only to be rubbed against its sealing surfaces while heat is applied.

Safety Note

Handling Epoxy Resin

Care must be taken when using epoxy resins because they contain chemicals that may irritate the skin. Contact with the skin should be avoided. In case of contact, remove the epoxy and clean the skin with rubbing alcohol or waterless soap. Then, wash thoroughly with soap and water.

Copyright Goodheart-Willcox Co., Inc.

Two-Part Epoxy Repair

When repairing tubing, first determine the size of the leak. Small leaks or holes up to 1/16″ in diameter can often be successfully sealed by placing the mixed epoxy over the leak and allowing it to cure. The same procedure is recommended for small tubing cracks. For larger holes, a patch of the same type of tubing material is recommended.

1. Clean the surface or surfaces to be bonded by scrubbing them with clean, coarse sandpaper or clean steel wool.
2. Clean the surface with a recommended solvent, such as methyl ethyl ketone, toluene, acetone, or a similar industrial solvent. Obey all solvent safety guidelines listed on the container.
3. Connect a vacuum pump to the service port.
4. Run the vacuum pump until 5 in. Hg vacuum is registered on the suction compound gauge.
5. Mix together equal parts resin and hardener on a clean surface, such as a piece of cardboard. Blend the parts together with a mixing stick until the mixture has a uniform color. Work quickly, as the compound will harden within five minutes.
6. Apply the epoxy mixture directly to the surface if there is only a small hole. Apply to mating surfaces if a patch of the same type of material in the system is to be used. Epoxy compounds should be used immediately after mixing, since chemical hardening starts immediately.
7. Allow several hours for the epoxy to dry. During this time, the technician may perform other service duties.
8. Pressure test the system by adding a small amount of nitrogen pressurized up to 5 psig.
9. Add more nitrogen to the system and test to 100 psig.
10. Epoxy on tools may be cleaned using isopropyl alcohol or white vinegar.

One-Part Epoxy Repair

1. Locate the leak, recover any remaining refrigerant, and pull a vacuum.
2. Clean the area with a stainless steel brush. Do not use emery cloth or products that may leave a residue.
3. Heat the area next to the leak. Do not put the flame directly on the epoxy as it will melt.
4. Keep the flame next to the leak and once the one-part epoxy begins to melt, rub to cover the leak completely.
5. Allow the epoxy to cool to room temperature.
6. Recharge the system and test with a leak detector to confirm the leak has been repaired.

11.4 Evacuating a System

A refrigeration system should only contain its refrigerant in a liquid or vapor state and a compatible lubricant. However, moisture and other substances often enter a refrigeration system during service work. This happens after refrigerant has been recovered and the system is opened to the atmosphere. To remove this unwanted moisture, a technician must evacuate the system.

Evacuation is the removal of all vapors, gases, and fluids from a system. Evacuation occurs after the refrigerant has been recovered from the system and before the system is recharged. Anything that is not refrigerant or refrigeration lubricant is a foreign substance that can be removed by connecting the refrigeration system to a vacuum pump and drawing a vacuum on the system. However, even the most careful evacuating and purging will not protect a system from damage if it was carelessly reassembled with dirt in the system.

The two main methods of evacuation are *deep vacuum* and *triple evacuation*. The primary differences between the deep vacuum method and triple evacuation method are the level of pressure achieved in the system and the number of times a vacuum is pulled on the system.

By reducing the pressure in a system, a vacuum pump lowers the boiling point of any substances remaining in the system, **Figure 11-17**. When an adequate vacuum is drawn, any moisture in the system will boil and be drawn out by the vacuum pump. For this reason, evacuation for the purpose of moisture removal is also called *dehydration*.

Caution

Compressor Use

In some refrigeration systems, the compressor depends on vapor flow to cool its motor windings and other parts. Therefore, do not use a refrigeration system's compressor as a vacuum pump to evacuate a system. It may overheat and suffer damage.

If a refrigeration system has a leak, the system will be unable to maintain a vacuum. Even after the

Copyright Goodheart-Willcox Co., Inc.

Boiling Point of Water at Various Vacuum Levels		
Boiling Point (°F)	In. Hg Vacuum	Microns
35	29.72	5,170
45	29.62	7,630
55	29.48	11,075
65	29.30	15,815
75	29.05	22,245
85	28.70	30,850
95	28.25	42,220
105	27.68	57,050
115	26.92	76,180
125	25.96	100,590

Goodheart-Willcox Publisher

Figure 11-17. This chart shows the evaporating temperature of water at different vacuum pressures.

vacuum pump has been turned off and the valve to the pump has been closed to isolate the system, the system pressure will rise steadily. A technician can pull a vacuum on a leaking system for days and still not guarantee that it is completely dehydrated and clean. Always repair all leaks before performing an evacuation.

Another possible cause of insufficient or incomplete vacuum is moisture in the system. If moisture is in the system, it will cause the system pressure to rise and level off after the valve to the vacuum pump is closed. The gauge reading will level off at a pressure corresponding to the water vapor pressure at that temperature. **Figure 11-18** illustrates the way a leak affects pressure and the way moisture in the system affects pressure. The graphs show the change in vacuum when the valve to the vacuum pump is closed.

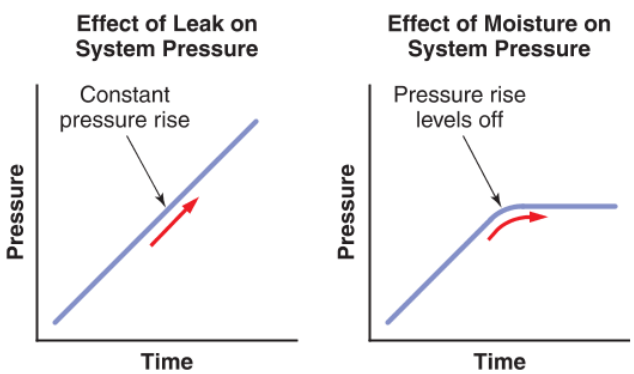

Goodheart-Willcox Publisher

Figure 11-18. These graphs show how leaks and moisture affect pressure in a system once the system is isolated from the vacuum pump. A leak will cause a constant pressure rise. Moisture will cause a pressure rise that eventually levels off.

11.4.1 Tips for Performing Evacuations

A few key practices help evacuation jobs go more smoothly and easily. Several of these practices are the same as when performing recovery procedures, such as using short, large-diameter hoses and adding heat to the compressor and other places moisture might freeze.

Vacuum pump service lines should be as large in diameter as possible and as short as necessary to negate any pressure drop. Pressure drop is very important. Evacuation may take up to eight times longer with a 1/4″ line than with a 1/2″ line. It may take twice as long using a 6′ line than with a 3′ line, **Figure 11-19**.

In the process of lowering system pressure for evacuation, temperature also drops. Remember the principles of the combined gas law: in a fixed volume, as pressure drops, temperature also drops. A rapid pressure-temperature drop may freeze some of the moisture in a refrigeration system. To completely dehydrate an evacuated system, technicians often have to warm the system. Warming the system causes any moisture in the system to vaporize so that it can be drawn out by the vacuum pump. The entire system should be warmed evenly so that water vapor does not recondense in cooler areas of the system.

Caution

Safe Heat Application

When heating a refrigeration system during evacuation, never use a torch. A torch may create localized temperatures that are high enough to decompose lubricant, insulation, and refrigerant. Heat should be applied by raising the ambient air temperature or by using heat lamps.

Pro Tip

Vacuum Pump Storage

Always *break the vacuum* of a vacuum pump before storing it. Breaking the vacuum means equalizing the vacuum pump and atmospheric pressure. A vacuum pump should not be stored when it is in vacuum or pressurized. If a vacuum pump's vacuum is not broken, the cylinder will fill with oil and the pump will become oil-locked. Also, when a vacuum pump is in vacuum, be careful to keep the area around its inlet free and clear, especially while opening the isolation valve.

Copyright Goodheart-Willcox Co., Inc.

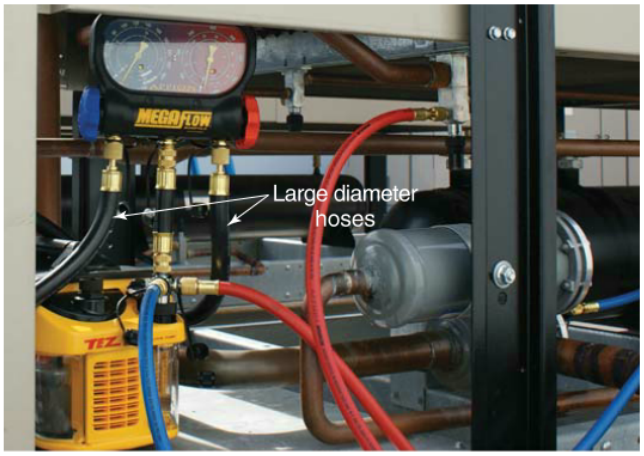

Appion Inc.

Figure 11-19. Using short, large diameter hoses with the vacuum pump as close as possible to the unit minimizes evacuation time.

11.4.2 Deep Vacuum

Deep vacuum is an evacuation method in which a technician uses a vacuum pump to pull a vacuum of 250 microns (0.25 mm Hg) or deeper until no moisture or other vapor remains in the system. A vacuum gauge is used to measure the pressure conditions produced by the vacuum pump. Watching vacuum gauge readings during a deep vacuum evacuation is the best way to determine if a system has moisture in it or if it has leaks. A vacuum gauge is installed between the vacuum pump and the refrigeration system by using a T-fitting, **Figure 11-20**.

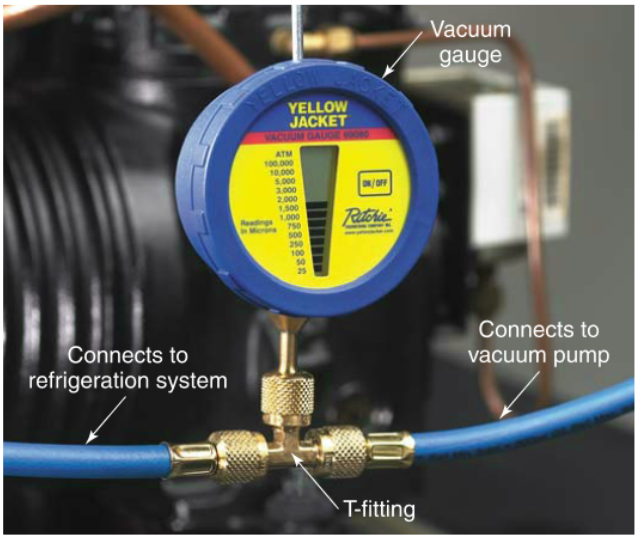

Ritchie Engineering Co., Inc. – YELLOW JACKET Products Division

Figure 11-20. By using a T-fitting, a technician can place a vacuum gauge between the vacuum pump and refrigeration system to monitor pressure.

When the vacuum pump is shut off, the gauge reading will rise from its 250 micron reading for approximately one minute. If the reading levels off and holds steady around 500 microns, the system is leak-free, moisture-free, and ready to be recharged. If the gauge reading continues to rise after one minute, there is moisture or a leak in the system.

Piercing valves are impractical for deep vacuum evacuations because their valve openings are too small. Service ports and access ports must be used for deep vacuum evacuations. Also, if the system is being evacuated through Schrader valve access ports, the valve cores should be removed prior to evacuation. If left in place, the valve cores would create a restriction and increase the time required for the procedure.

When pulling a vacuum, standard synthetic charging or servicing hose may collapse due to the deep vacuum. Also, the synthetic material used for standard hose is somewhat *permeable*, meaning it allows gases to pass through. This makes it impossible to pull a vacuum on a system. Instead, use specially designed refrigerant hoses, copper tubing, or special metal hoses for vacuum pump connections, **Figure 11-21**.

Pro Tip

Vacuum Pump Solenoid Valve

It can take a long time to draw a deep vacuum. If the vacuum pump will be running unattended for a long period of time, a solenoid valve should be installed between the vacuum pump and refrigeration system. The solenoid valve should be wired in parallel with the vacuum pump motor. If power to the pump is interrupted, the solenoid valve will automatically close. This prevents the vacuum in the system from potentially drawing oil out of the vacuum pump. If power is restored, the solenoid valve will automatically open, and the evacuation will resume.

Deep Vacuum Evacuation Procedure

After the refrigerant has been recovered from a system and system power has been turned off, a technician may begin pulling a deep vacuum.

1. Begin by connecting equipment to the system as shown in **Figure 11-22**. Use copper tubing or hoses that are heavy duty or made of metal instead of regular refrigerant hoses. Arrangements may vary depending on the type of system and the number of service valves, but the vacuum gauge should be as close to the refrigeration system as possible. Also, there should be some type of valve between the vacuum gauge and the vacuum

Copyright Goodheart-Willcox Co., Inc.

Metal Hose

Heavy-Duty Hose

Ritchie Engineering Co., Inc. – YELLOW JACKET Products Division

Figure 11-21. Special hoses should be used to pull a deep vacuum to prevent leaks and the infiltration of outside gases.

pump that can isolate the refrigeration system and vacuum gauge from the vacuum pump. In **Figure 11-22**, the gauge manifold performs this function, but other couplings and connectors with valves may also be used.

2. Fully open the gauge manifold valves.
3. Open the service valves to mid-position.
4. Check to see if the vacuum pump has an inlet valve and a gas ballast valve. Refer to the vacuum pump manufacturer's operating manual for instructions on these valve positions. Typically, you must open the inlet valve and close the gas ballast valve.
5. Turn on the vacuum pump and pull a vacuum of 250 microns.
6. After the pump achieves the desired vacuum, close the gauge manifold valves and then turn off the vacuum pump. This isolates the system and vacuum gauge from the vacuum pump.
7. Monitor the pressure reading on the vacuum gauge for three minutes. The pressure should rise slightly, but then level off to a steady pressure. If the pressure rises above 500 microns, the system is leaking or contaminated with moisture. If the pressure levels off and holds steady at a pressure of 500 microns or less, the system is dry and leak-free.

11.4.3 Triple Evacuation

Triple evacuation is an evacuation method in which a technician uses a vacuum pump to pull a vacuum of 1500 microns three times. After the first and second vacuum, the technician charges the system back up to a pressure between 0 psig and 3 psig with nitrogen. When the vacuum is drawn on the system, moisture evaporates into water vapor. When small amounts of nitrogen are charged into the system, some of the moisture (in vapor form) remaining in the system is absorbed into the nitrogen.

Before performing a triple evacuation, remember to recover the refrigerant from the refrigeration system and turn off power to the refrigeration system. Also, before evacuating the system, conduct a pressure test. Use either dry nitrogen or dry carbon dioxide (CO_2). Use these gases with a pressure regulator and a large capacity pressure-relief valve.

Before recovering refrigerant and preparing to perform a triple evacuation, consider using a gauge manifold with more than three ports and two valves. Gauge manifolds with additional ports and valves allow a technician to perform multiple procedures with several different instruments and machines without having to break connections, which reduces work time and task difficulty.

Triple Evacuation Procedure

Before beginning this procedure, review your vacuum pump's operating manual for instructions on the positions and controls of the isolation valve, gas ballast valve, and exhaust.

1. Arrange and connect the equipment to the system as shown in **Figure 11-23**. Make sure a pressure regulator and pressure-relief valve are installed on the nitrogen cylinder.
2. Close the shutoff valve between the nitrogen cylinder and gauge manifold.
3. Open the shutoff valve between the vacuum pump and the gauge manifold.

Copyright Goodheart-Willcox Co., Inc.

4. Turn on the vacuum pump and pull a vacuum of 1500 microns.
5. Close the shutoff valve between the vacuum pump and the gauge manifold and then turn off the vacuum pump.
6. Open the shutoff valve to the nitrogen cylinder and then slowly open the cylinder valve. Slowly open the pressure regulator.
7. Charge the system to a pressure between 0 psig and 3 psig with nitrogen. Then, close the cylinder valve, regulator, and shutoff valve.
8. Repeat Steps 3–5 to pull a vacuum of 1500 microns for a second time.
9. Repeat Steps 6–7 to recharge the system.
10. Repeat Steps 3–5 a third and final time.

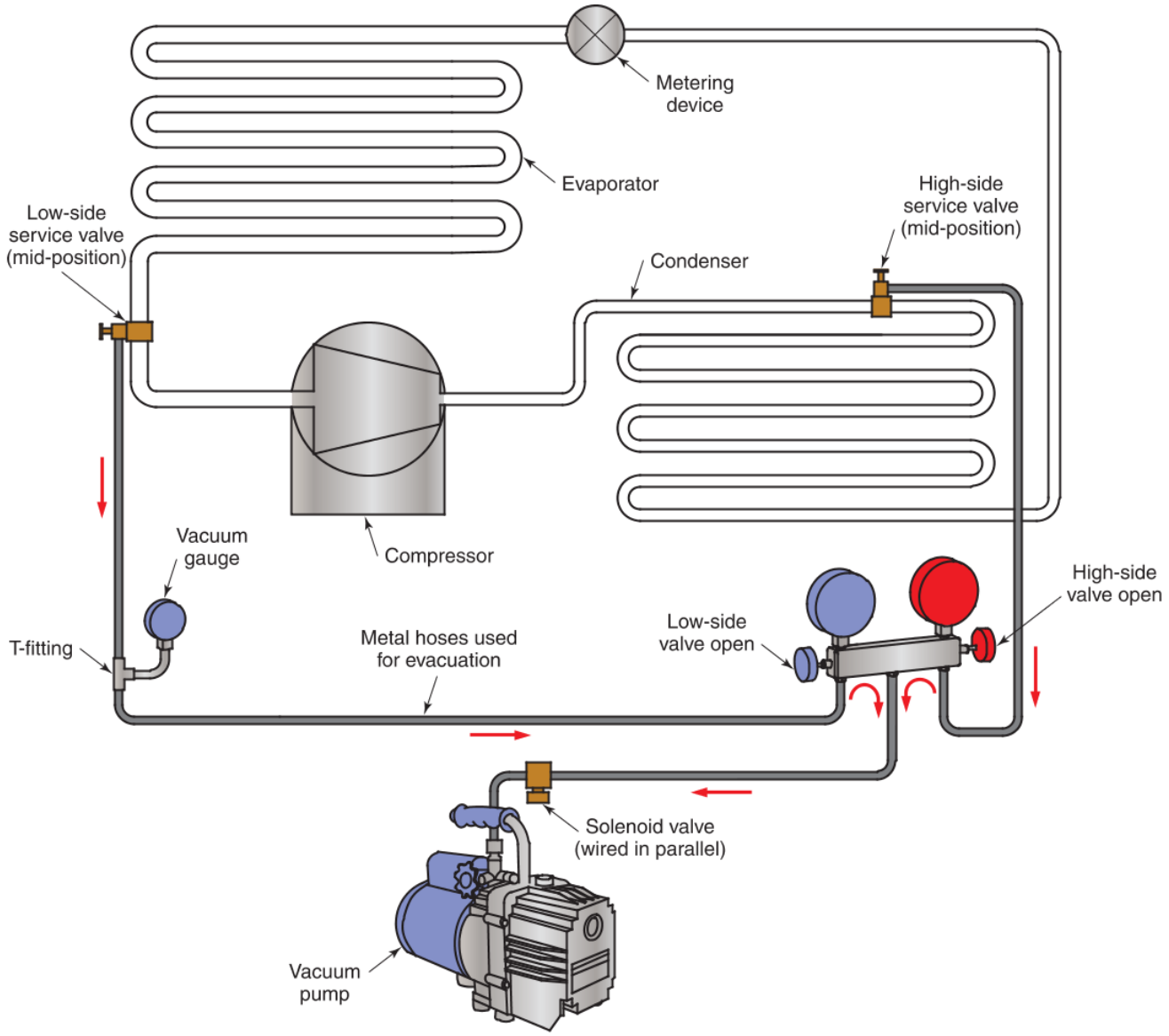

Goodheart-Willcox Publisher

Figure 11-22. Equipment setup for pulling a deep vacuum. Note the solenoid valve wired in parallel with the vacuum pump's motor. If power to the vacuum pump is interrupted, the solenoid valve will close, preventing the vacuum in the system from drawing oil out of the pump.

Copyright Goodheart-Willcox Co., Inc.

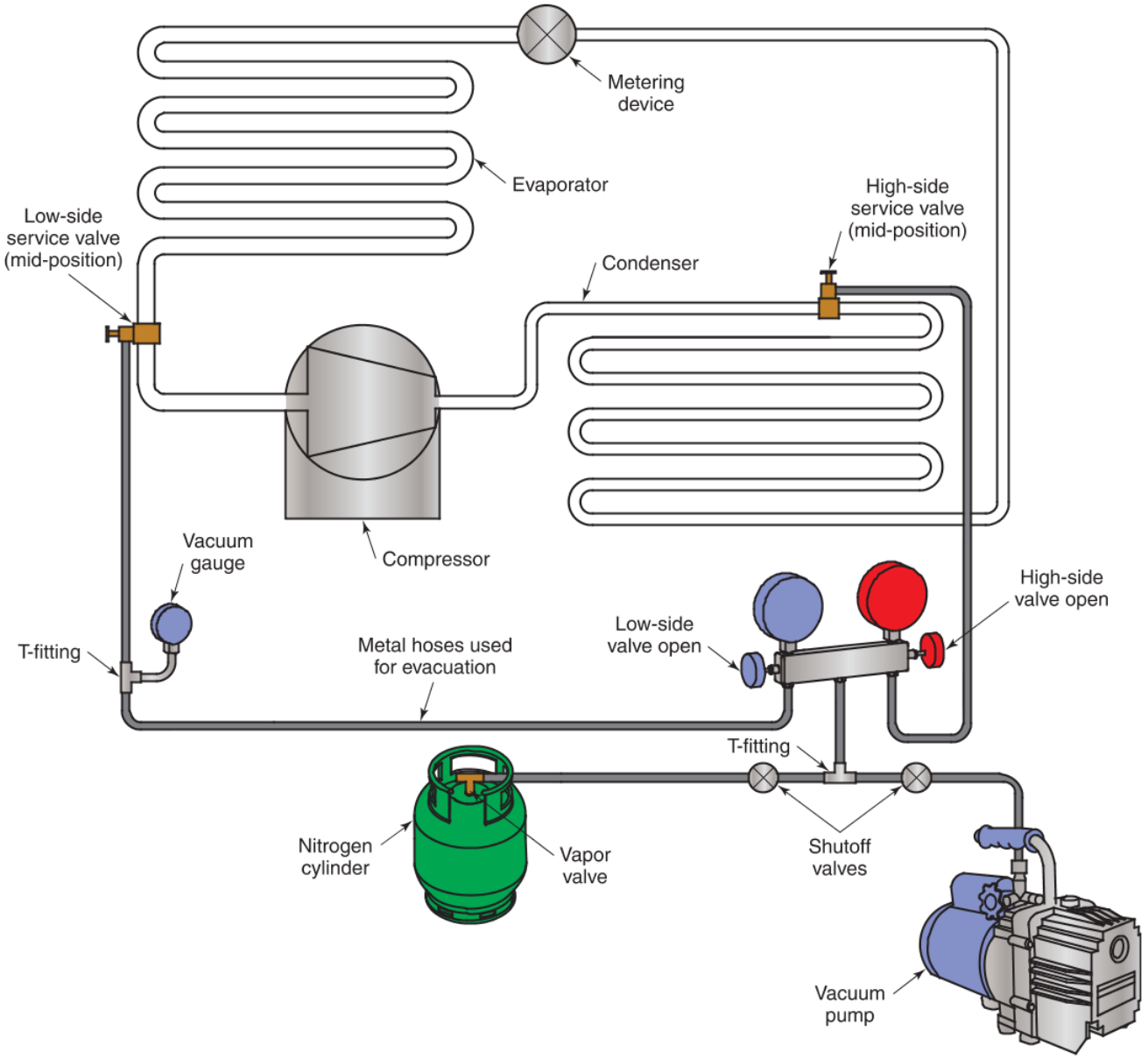

Goodheart-Willcox Publisher

Figure 11-23. Gauge manifold, nitrogen cylinder, vacuum gauge, and vacuum pump setup for the triple evacuation process. Evacuate the system with the vacuum pump and then charge it up to 3 psi using the nitrogen cylinder. Repeat the evacuation and charging. End with a third and final evacuation.

11.5 Charging a System

Charging a system means adding refrigerant to a refrigeration system. Anytime a system has been opened, repaired, and evacuated, it must be charged with refrigerant before being put back into service. This is usually done by charging the proper weight of refrigerant back into the system.

Thinking Green

Refrigerant Charging

Refrigeration system manufacturers often design their systems to operate with a specific amount of refrigerant. For such systems, any refrigerant more or less than the system's rated charge results in efficiency losses and increased wear and tear.

Copyright Goodheart-Willcox Co., Inc.

Systems that require periodic charging of small amounts of refrigerant may indicate a small leak in the system. In these cases, find the leak and repair the unit. Allowing refrigerant to escape to the atmosphere may be harmful to the environment. Additional refrigerant is usually charged into the system until the superheat, subcooling, and system pressures are in their normal operating ranges. Symptoms that can indicate that a system needs to be charged with additional refrigerant include the following:

- A partially frosted evaporator.
- Low head (high-side) pressure.
- Low pressure on the low side.
- A visible leak (oil spots).
- System short cycling.

Remember that a pressure difference is needed to move the refrigerant from the cylinder into the system. The charging equipment must be at a higher pressure than the refrigeration system to force refrigerant to flow from the cylinder into the system.

The amount of refrigerant that should be used varies with the type of system. Some systems (including those equipped with a low-side float, automatic expansion valve, or thermostatic expansion valve) are not particularly sensitive to the amount of refrigerant charge. These systems often have a liquid receiver that can store a reserve of refrigerant and a metering device that meters the amount of refrigerant entering the evaporator to match the load. In contrast, high-side float systems and capillary tube systems, which do not have these capabilities, are very sensitive to the amount of refrigerant charge.

Some systems are equipped with sight glasses. A sight glass in the liquid line is a quick way to check if a system has sufficient refrigerant. Vapor bubbles in a sight glass are often a sign that a system is short of refrigerant. The bubbles in the sight glass should disappear after the system has been properly charged. In general, a sight glass is not the most reliable or dependable method of checking a charge. It is best used as a quick confirmation of a correct charge after checking other system measurements and conditions.

Pro Tip

Sight Glasses on Capillary Tube Systems

Sight glasses are not reliable for checking the refrigerant charge on systems that use a capillary tube as a metering device. Some liquid refrigerant may begin to flash to vapor in the liquid line of a system with a capillary tube metering device. Only use sight glasses on systems with other metering devices.

11.5.1 General Guidelines for Charging a System

Refrigerant can be charged into a system either in vapor or liquid form. Liquid charging is quicker, but it presents some serious risks. Charging with liquid refrigerant can cause slugging in the compressor, which could severely damage the equipment. For this reason, most systems should be vapor charged. To charge with vapor refrigerant, place the refrigerant cylinder in the upright position, and charge the refrigerant into the system's low side. To charge with liquid refrigerant, turn the cylinder upside-down, and charge the refrigerant into the high side.

Pure refrigerants, such as R-134a, should be vapor charged to prevent compressor slugging. Zeotropic refrigerant blends (400 series refrigerants) should always be liquid charged. The different refrigerants that make up a zeotropic refrigerant blend vaporize at different temperatures. For this reason, if a zeotropic blend is charged into a system as a vapor, the individual refrigerants will fractionate (split into their component refrigerants). The component refrigerant with the lowest boiling point will boil out of the blend and fill the system first. This would create an improper mixture of refrigerant in the system.

If a system is being charged following service, it should be charged with the full amount of the recommended charge. If the system is partially charged, it may have a leak. Locate and correct the leak as needed before charging the system. If the system is not leaking, refrigerant can be added to the system in small quantities until the proper charge is achieved. The system's superheat, subcooling, and system pressures should be closely monitored to ensure that the system is not overcharged. Detailed information about monitoring the system charge using superheat and subcooling is discussed earlier in this chapter.

Some of the lubricant in the system will dissolve in the refrigerant. If the compressor becomes noisy soon after adding refrigerant, lubricant should be added. Oil quantity can be checked if the compressor has an oil sump with a sight glass. Hermetic compressors have no method of measuring the oil quantity. The only method to determine the oil amount in a hermetic compressor is to remove the compressor and drain the oil. This is seldom required, as most oil in a hermetic system stays in the system after evacuation.

11.5.2 Charging by Weight

The amount of refrigerant that should be charged into a system is specified by weight. In order to charge a system by weight, an HVACR technician must first determine the proper charge for the system. Often this

Copyright Goodheart-Willcox Co., Inc.

information can be found on a system's label or tag. It is expressed as the weight of the total amount of refrigerant that should be in the system.

Pro Tip

Determining Refrigerant Charge

A single packaged machine will have a specified refrigerant charge that can be taken at face value. A split system, however, will have a refrigerant charge amount that is conditional on the distance between the condenser and the evaporator. Usually the specified refrigerant charge will be enough refrigerant for a specific length of liquid line. If the liquid line is longer than specified, additional refrigerant must be added. Refer to system labels and tags to determine the total amount of charge required.

Charging by weight requires the use of a digital charging scale or a charging cylinder. ***Charging cylinders*** are generally used on small systems, such as domestic appliances. These cylinders are used for adding small, precise amounts of refrigerant. They only hold around five pounds of refrigerant or less. Charging cylinders are rarely used. Digital charging scales are commonly used to charge by weight.

Vapor Charging by Weight

After recovering refrigerant in the system, making repairs, and evacuating the system, you are ready to begin.

1. Connect the gauge manifold, digital charging scale, and service hoses as shown in **Figure 11-24**. Leave the connections to the high- and low-side service valves loose.
2. Open the high-side and low-side valves on the gauge manifold.
3. Purge the service lines and gauge manifold. After purging, tighten the high-side and low-side service valve connections.
4. Zero the digital charging scale.
5. With the compressor off, begin charging the system. Keep an eye on the scale readout to ensure that the system is not being overcharged.
6. When refrigerant stops flowing into the system, close the gauge manifold's high-side valve and start the system compressor.
7. Watch the readout of the digital charging scale closely. When the proper weight of refrigerant has been added, close the gauge manifold's low-side valve to stop the charging process. (Some scales can be programmed to stop the charging process automatically when the proper weight has been charged into the system.)
8. Let the system operate for 10–15 minutes to stabilize temperatures and pressures. Check superheat, subcooling, and discharge and suction pressures to verify that the system has the correct charge.
9. Check the digital charging scale and record how much refrigerant was charged into the system: _____.

Occasionally, you may encounter a comfort cooling system or domestic appliance that has a low charge. If the low charge is the result of significant leak, the refrigerant must be recovered, the leak must be located and repaired, and the system evacuated. It is then recharged using the previous procedure.

A small leak, however, may be caused by a loose valve core in an access port or a similar problem. If the cause of the low refrigerant level can be detected and fixed without recovering the refrigerant, the technician can simply "top off" the existing refrigerant charge.

Vapor Charging to "Top Off" an Undercharged System

The following procedure explains how to add refrigerant to an undercharged system.

1. Connect a refrigerant cylinder and gauge manifold to the system as shown in **Figure 11-25**. Leave the connections to the service valves loose.
2. Open the low-side and high-side valves on the gauge manifold.
3. Crack open the cylinder valve to purge the service lines. Close the refrigerant cylinder valve when the lines have been purged and then tighten the service valve connections.
4. Zero the digital charging scale.
5. Close the high-side valve on the gauge manifold.
6. Put the low-side service valve and high-side service valve in the mid-position.
7. Start the compressor and then open the refrigerant cylinder valve to add refrigerant to the low side of the system.
8. Allow the system to run for several minutes to stabilize pressures and temperatures, and then check the superheat and subcooling. If the subcooling is low or the superheat is high, add more refrigerant. Repeat this step until

Copyright Goodheart-Willcox Co., Inc.

the superheat and subcooling values indicate the proper charge has been added.

9. Check the digital charging scale and record how much refrigerant was charged into the system: _____.

As discussed earlier in this chapter, zeotropic refrigerants, such as R-410A, must be liquid charged into a system. Initially, the refrigerant is liquid charged into the high side of the system. When the liquid line is filled to capacity, the remaining liquid is charged into the low side of the system, using a special metering device installed between the service hose and the low-side service valve. Some technicians use the same process to quickly charge individual refrigerants, but this is not recommended because of the risk of slugging the compressor.

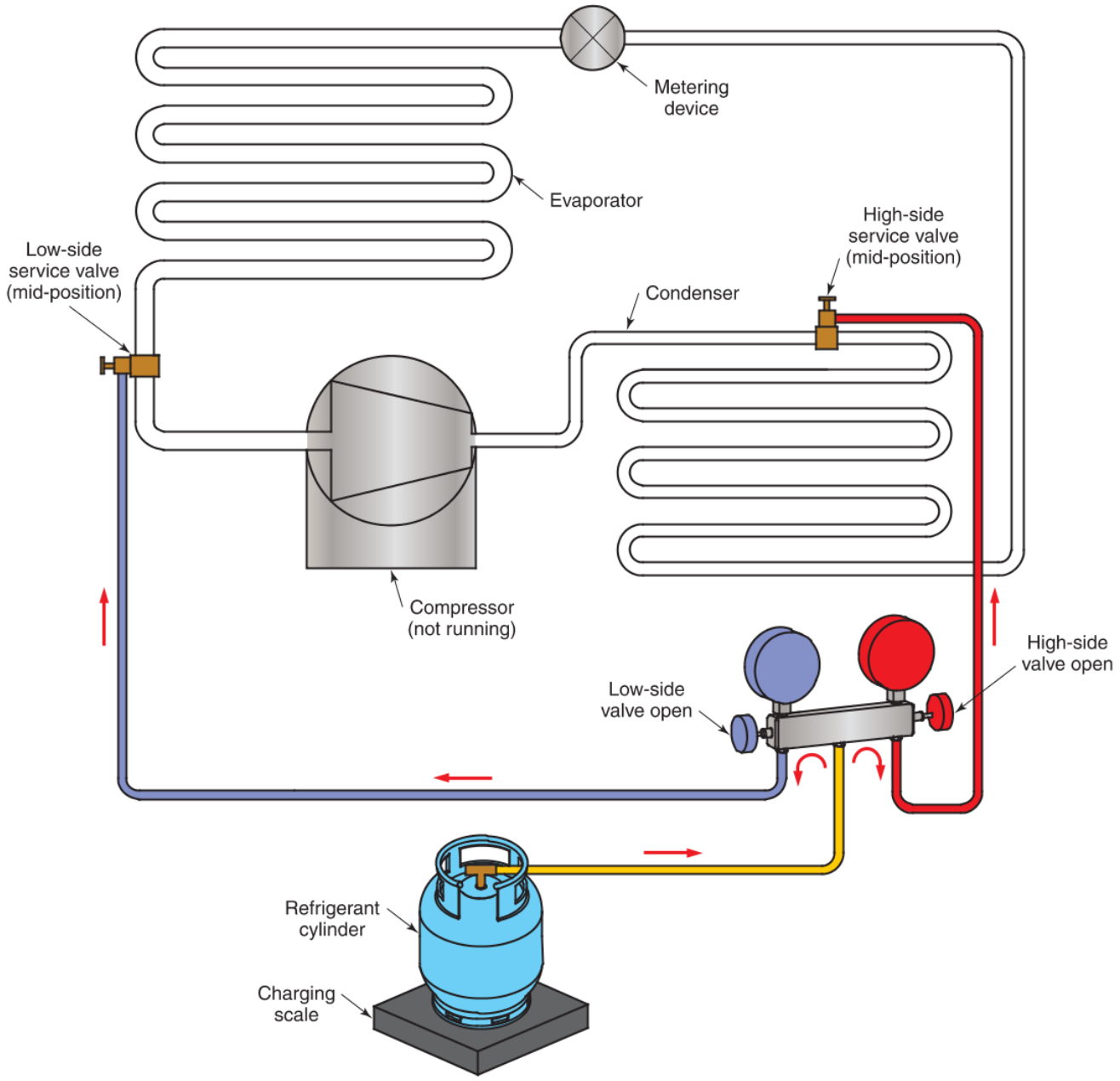

Goodheart-Willcox Publisher

Figure 11-24. Review this cylinder, gauge, and hose arrangement for charging vapor refrigerant into a system. Begin by charging to both the high side and low side. Close the gauge manifold's high-side side before starting the compressor.

Copyright Goodheart-Willcox Co., Inc.

Liquid Charging by Weight

The following procedure is used to liquid charge a refrigeration system:

1. Connect the gauge manifold, refrigerant cylinder, and digital charging scale as shown in **Figure 11-26**, but with the refrigerant cylinder standing upright (valves on top). Also, leave the liquid receiver service valve and low-side service valve connections loose to purge the equipment. After purging, tighten the service valve connections.
2. Invert the refrigerant cylinder and open the liquid receiver service valve to the mid-position. Watch the scale closely. When the proper weight of refrigerant has been added, close the high-side valve on the gauge manifold.

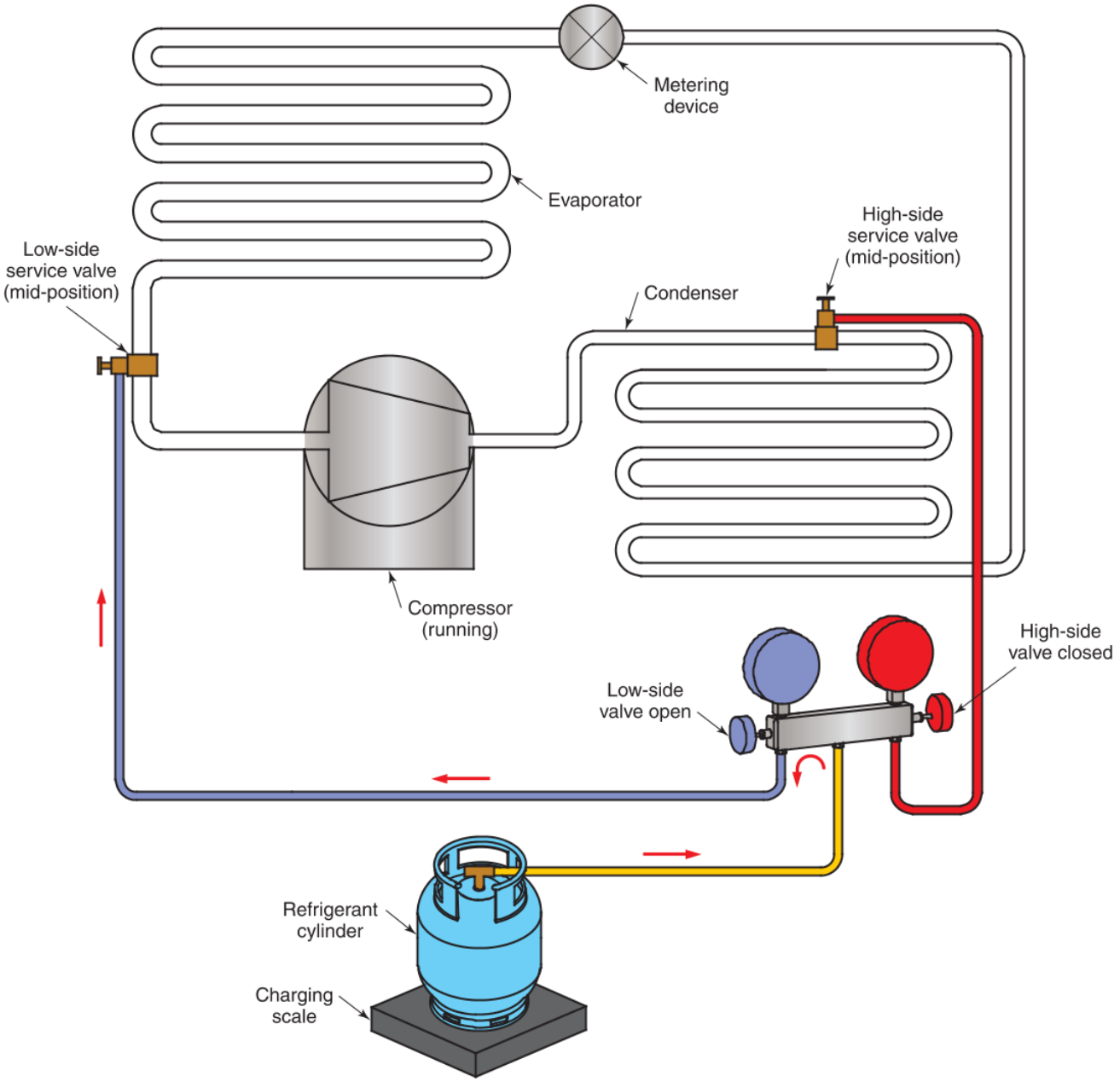

Goodheart-Willcox Publisher

Figure 11-25. Review this cylinder, gauge, and hose arrangement for charging vapor refrigerant into the low side of a system. Note that the compressor is running while charging to the low side. This setup can also be used to "top off" a refrigeration system.

Copyright Goodheart-Willcox Co., Inc.

3. If the refrigerant stops flowing before the proper amount of refrigerant has been added, close the high-side manifold valve. Open the low-side service valve to mid-position, and make sure the low-side manifold valve is open. Closely meter the refrigerant into the suction line by cracking the low-side gauge manifold or metering valve. This allows only small amounts of liquid refrigerant to be added at a time, providing the refrigerant time to evaporate prior to reaching the compressor.
4. Start the compressor and watch the scale closely. The metering device installed between the gauge manifold and the low-side service valve will meter the refrigerant to the

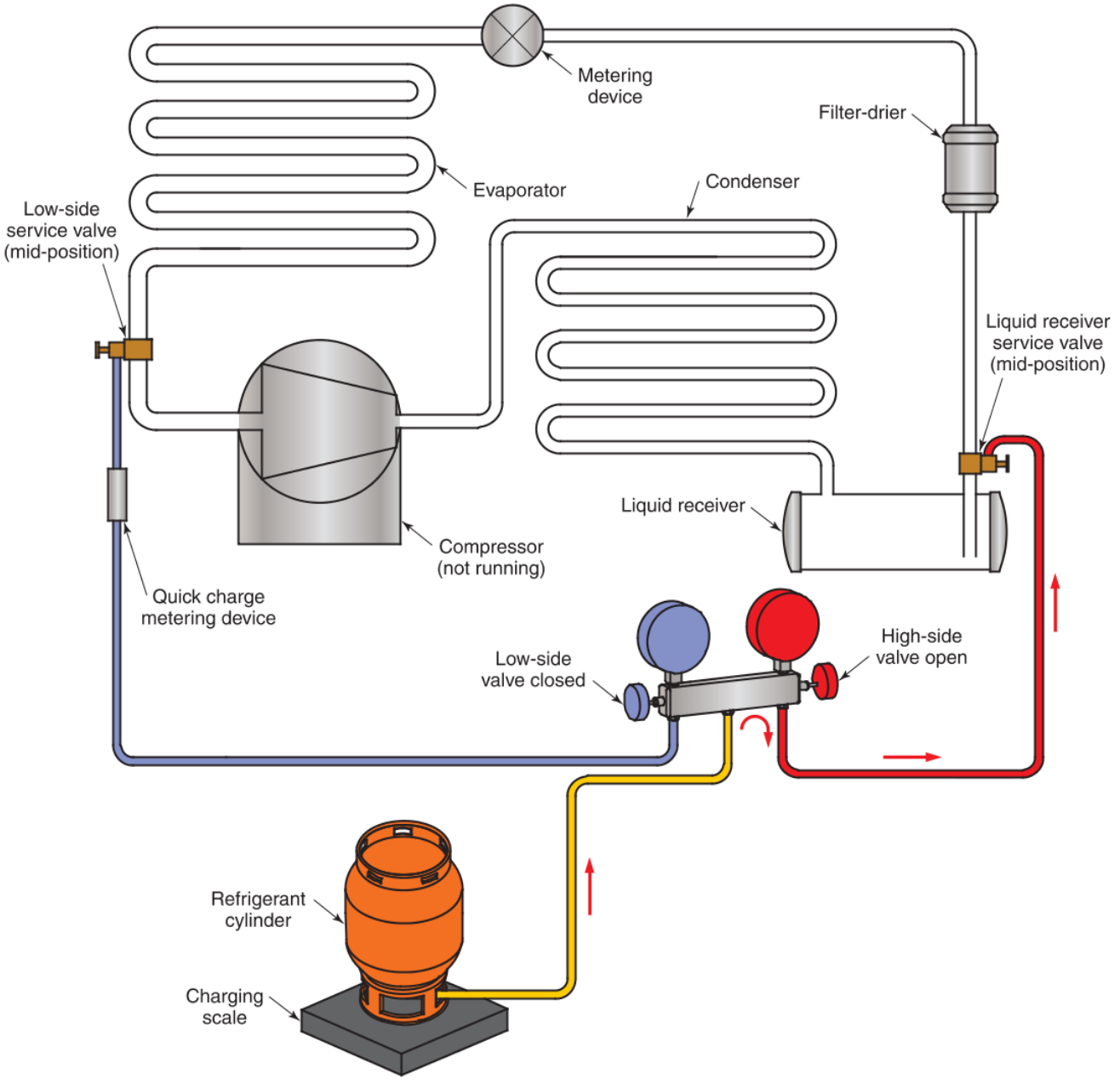

Goodheart-Willcox Publisher

Figure 11-26. Setup for liquid charging a system with zeotropic refrigerant blends. Begin by liquid charging the high side of the system with the compressor off.

Copyright Goodheart-Willcox Co., Inc.

low side, ensuring that no liquid refrigerant enters the compressor. See **Figure 11-27**.

5. When the proper amount of refrigerant has been added, close the low-side manifold valve.
6. Check superheat, subcooling, and suction and liquid line pressures to ensure that the proper charge has been added.
7. Check the digital charging scale and record how much refrigerant was charged into the system: _____.
8. To end the procedure, bypass liquid refrigerant in the high-side hose through the gauge manifold into the low side of the system. Backseat the LRSV, crack open the high-side gauge manifold valve, and crack open the

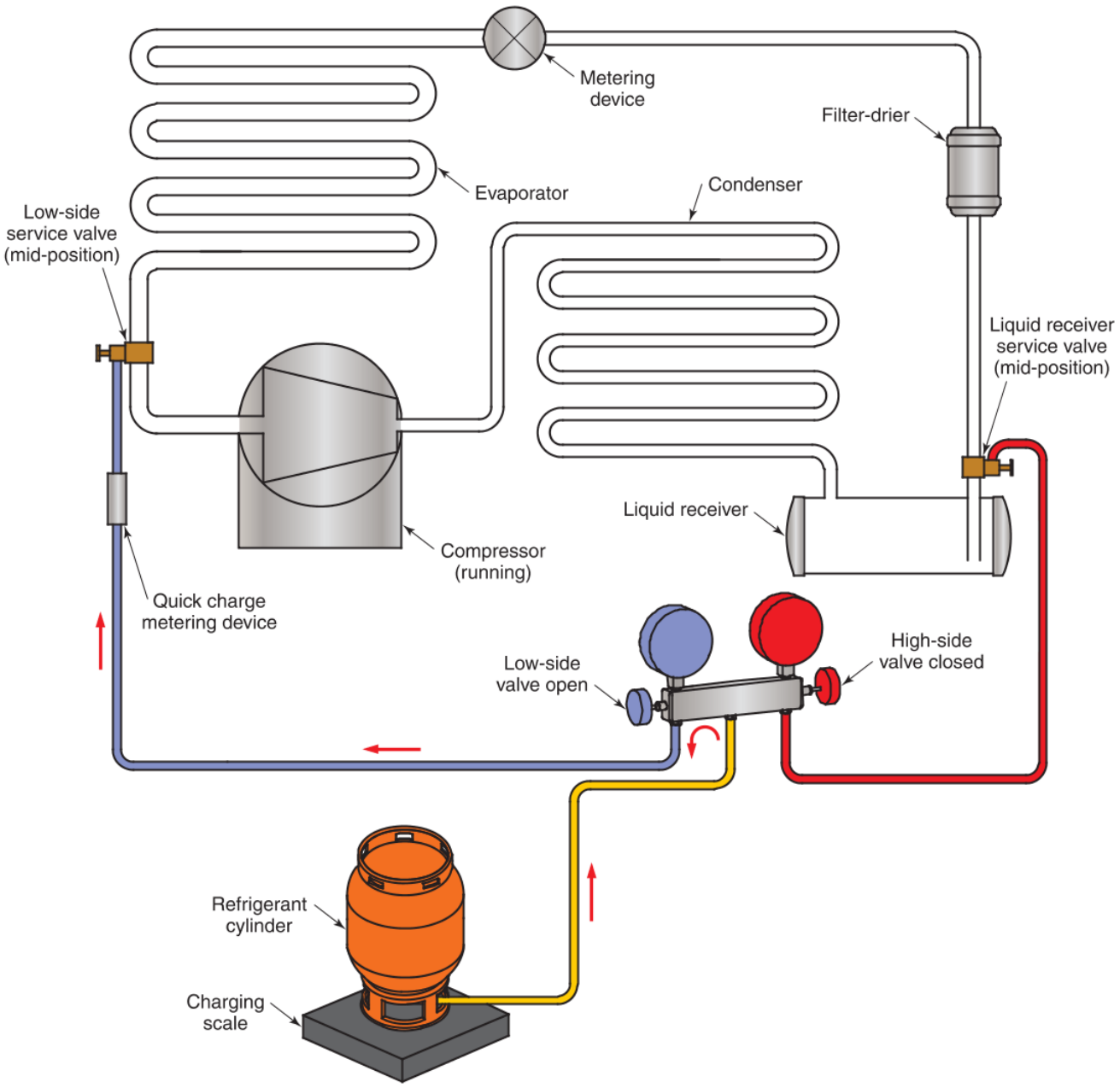

Goodheart-Willcox Publisher

Figure 11-27. If additional refrigerant is needed to complete liquid charging, install a metering device between the gauge manifold and the low-side service valve and charge into the low side with the compressor running.

Copyright Goodheart-Willcox Co., Inc.

low-side gauge manifold valve. The liquid in the high-side hose is being metered into vapor and drawn into the low side. Wait until the high-pressure gauge and compound gauge both read suction pressure.

11.5.3 Changing Refrigerants (Retrofitting)

Retrofitting is the updating of an existing system to new standards, often by installing modern replacements for certain components. The identification of the type of refrigerant used in a system may be difficult. It is normally accomplished by checking the manufacturer's tags on the equipment. Technicians cannot properly identify refrigerants by color or smell and should never attempt to do so.

Safety Note

Toxic and Lethal Gases

Sniffing refrigerants can be deadly. Never attempt to identify refrigerants by smell. They can cause a variety of harmful physical responses, including asphyxiation.

A refrigerant analyzer identifies unknown refrigerants and determines their concentrations. It can be used on residential systems, commercial systems, automotive systems, or refrigerant cylinders. It is used extensively in automotive air conditioning, where it is difficult to determine if an R-12 system has been converted to R-134a or another type of refrigerant, **Figure 11-28**.

Ritchie Engineering Co., Inc. – YELLOW JACKET Products Division

Figure 11-28. Refrigerant analyzers vary by manufacturer. Always read the operator's manual before using any type of refrigerant identification instrument.

If it is necessary to change refrigerant, certain system components must be modified. This is dependent on the original design of the system. A technician should contact original equipment manufacturers (OEMs) prior to changing the type of refrigerant or refrigerant controls to see what service and replacement will need to be performed.

Often the metering device will need to be changed and the lubricant replaced. The proper replacement device and lubricant are determined by the new refrigerant to be used. Also, the system should be flushed and a new filter-drier should be installed in the system.

4

Code Alert

Refrigerants

Local building codes may specify the types of refrigerants that can be used in refrigeration systems. The codes may address the purity of refrigerants, mixing of refrigerants, retrofits from one refrigerant to another, and the amount of refrigerant that can be contained in a system. The types of refrigerants that are permissible depend on the building's occupancy type (residential, commercial, industrial, institutional) and the potential for the system to leak in an occupied space.

R-22 to R-410A Retrofit

Due to its negative environmental impact, the refrigerant R-22, which is an HCFC, is in the process of being phased out in the United States. It has been illegal since 2010 to manufacture new equipment containing R-22. By 2020, all production and importing of R-22 will cease in the United States. To prepare for this phaseout, contractors and technicians are starting to retrofit R-22 systems with HFC refrigerants, such as R-404A, R-407C, and R-410A.

Systems that use R-410A have increased efficiency and use less energy, which means they have less impact on the environment than systems with R-22. One reason for the increased efficiency with R-410A is its extremely low boiling point –61°F (–51°C). However, one side effect of R-410A's low boiling point is that systems using R-410A operate under much higher pressures than systems using R-22. This difference in pressure poses special problems when retrofitting from R-22 to R-410A.

Many of the components that are used in an R-22 system cannot be used in a system using R-410A. The metering device used in R-22 systems is typically too large for R-410A systems and will need to be replaced with a metering device that is 10–15% smaller. Because R-410A operating pressures are 40–70% higher than in R-22 systems, a retrofit with R-410A often requires a new compressor with thicker walls, which can handle the higher system pressures. In addition, R-410A

Copyright Goodheart-Willcox Co., Inc.

Rheem Manufacturing Company

Figure 11-29. Many equipment manufacturers make HVAC equipment specifically designed for use with R-410A, such as the evaporator unit shown here.

systems require thicker ACR tubing, a condenser rated for use with R-410A, filter-driers that are rated for at least 600 psi, and an evaporator that is rated for 235 psi, **Figure 11-29**.

Beyond changing system components, a technician will have to change the lubricant in the system as well. Many R-22 systems use mineral oil as a lubricant, but systems that use R-410A must use polyol ester (POE) lubricant. A single oil change to POE will still leave a significant amount of residual mineral oil in the system. When replacing mineral oil with POE, a technician must change the oil two or three times to ensure that only a negligible amount of mineral oil remains in the system.

Much of the service equipment that is required to work on R-410A systems, such as gauge manifolds, service lines, and recovery cylinders, must be rated specifically for use with R-410A. Recovery cylinders typically must be rated to handle 400 psi, and pressure gauges and service hoses must be rated for 800 psi, **Figure 11-30**.

Ritchie Engineering Co., Inc. – YELLOW JACKET Products Division

Figure 11-30. Notice how the R-22 high-pressure gauge only goes up to 500 psi, while the R-410A high-pressure gauge goes up to 800 psi.

Copyright Goodheart-Willcox Co., Inc.

Chapter Review

Summary

- Two methods for determining whether a refrigeration system's charge is correct is by checking the system's subcooling or superheat. To perform each method, a technician must know how to measure system temperatures and pressures. A technician must also be able to convert pressure to temperature using a pressure-temperature (P/T) chart.
- Passive recovery uses pressure differences between the refrigeration system and the recovery device to recover refrigerant without using a recovery machine. Active recovery processes use a recovery machine to remove refrigerant from a system in either vapor or liquid form.
- Recovery cylinders can hold a maximum refrigerant weight that is equal to 80% of the cylinder's water capacity by weight. A formula, which takes into account the specific gravity of the refrigerant being used, is used to calculate the maximum amount of refrigerant that a cylinder can hold.
- One method of leak detection involves pressurizing a system with an inert gas, such as nitrogen or carbon dioxide. Another method of leak detection uses the pressurized refrigerant already charged in the system. Another method requires the technician to add trace amounts of refrigerant along with nitrogen to a system to create a positive pressure.
- There are two ways to repair a leak in ACR tubing: brazing or epoxy resin. In order to repair a leak in refrigeration tubing by brazing, a technician first needs to recover the refrigerant in the system and then arrange for part of the system to be brazed to have a low-pressure flow of an inert gas, such as nitrogen, to prevent oxidation from occurring.
- Evacuating a system involves using a vacuum pump to lower the pressure in the system, which lowers the temperature at which liquids inside the system boil. Evaporated moisture and any other vapors are then drawn out by the vacuum pump. A system needs to be evacuated before any refrigerant can be charged into it.
- Charging a system means adding refrigerant to the system. Charging by weight is the most accurate form of charging an evacuated refrigeration system. Because of fractionation, zeotropic refrigerant blends must be liquid charged into systems.
- Retrofitting is the updating of an existing system to new standards, often by installing modern replacements for certain components. An example of a retrofit is R-22 being replaced with HFC refrigerants, such as R-404A and R-410A.

Review Questions

Answer the following questions using information in this chapter.

1. If a refrigeration system has a capillary tube metering device, then the _____ method should be used to check the charge in the system.
   A. active recovery
   B. passive recovery
   C. subcooling
   D. superheat
2. Most refrigeration systems have a subcooling value between _____ °F.
   A. 0–8
   B. 10–20
   C. 20–40
   D. 40–65
3. Superheat is equal to suction line temperature minus _____ temperature.
   A. liquid line
   B. compressor
   C. condenser saturation
   D. evaporator saturation
4. Subcooling is equal to _____ temperature minus liquid line temperature.
   A. suction line
   B. compressor
   C. condenser saturation
   D. evaporator saturation
5. If a system using a capillary tube or fixed orifice metering device has low superheat, then the system has _____.
   A. an excessive refrigerant charge
   B. no refrigerant charge
   C. a low refrigerant charge
   D. All of the above.
6. Performing a pump-down involves moving all the refrigerant in a system to the _____.
   A. liquid receiver
   B. compressor
   C. recovery cylinder
   D. evaporator

Copyright Goodheart-Willcox Co., Inc.

7. Passive recovery may involve using the _____ to pump refrigerant out of the system.
   A. recovery machine
   B. compressor
   C. vacuum pump
   D. superheat
8. Active recovery methods use _____ to recover refrigerant from a system.
   A. a recovery bag
   B. static pressure
   C. the system's compressor
   D. a recovery machine
9. During vapor recovery, the low- and high-side service valves should be _____.
   A. back seated
   B. front seated
   C. mid-positioned
   D. cracked open
10. Liquid recovery must be used in combination with _____ in order to remove a system's entire refrigerant charge.
   A. vapor recovery
   B. passive recovery
   C. static pressure
   D. push-pull recovery
11. The push-pull liquid recovery method pulls vapor refrigerant from the _____.
   A. liquid receiver
   B. compressor
   C. recovery cylinder
   D. evaporator
12. There should always be a _____ between the refrigeration system and the recovery machine to protect against contamination.
   A. recovery cylinder
   B. filter-drier
   C. metering device
   D. compressor pump
13. The maximum amount of refrigerant that can be stored in a recovery cylinder is equal to 80% of the cylinder's _____ by weight.
   A. vapor capacity
   B. vacuum capacity
   C. recovery capacity
   D. water capacity
14. The total recovery cylinder weight is equal to the maximum refrigerant weight plus the _____ of the cylinder.
   A. specific gravity
   B. water weight
   C. tare weight
   D. density
15. Some recovery cylinders have a(n) _____ that shuts the recovery machine off to prevent overfilling the cylinder.
   A. liquid level switch
   B. in-line filter-drier
   C. fusible plug
   D. burst disc
16. Which type of gas should be used to pressurize a system to check for leaks?
   A. Oxygen
   B. Nitrogen
   C. Acetylene
   D. Butane
17. All leak detection methods involve applying _____ to a refrigeration system.
   A. heat
   B. pressure
   C. oxyacetylene gas
   D. R-22
18. When recovering refrigerant, do *not* apply heat to _____ because it drives moisture out of them.
   A. compressors
   B. evaporators
   C. filter-driers
   D. condensers
19. It is always necessary to _____ the refrigerant in a system before repairing a leaking connection by brazing.
   A. recycle
   B. reclaim
   C. pressurize
   D. recover
20. A continuous flow of _____ is passed through a system during brazing to prevent the formation of oxidation.
   A. water
   B. oxygen
   C. nitrogen
   D. refrigerant
21. Which type of epoxy resin must be heated in order to harden?
   A. One-part
   B. Two-part
   C. Three-part
   D. Four-part
22. Which method of evacuation is most effective at removing moisture from a system?
   A. Triple evacuation
   B. Deep vacuum
   C. Push-pull evacuation
   D. Passive evacuation

Copyright Goodheart-Willcox Co., Inc.

23. Vacuum pump service lines should have a _____ to increase evacuation efficiency.
    A. large diameter
    B. small diameter
    C. long length
    D. Schrader valve core
24. A deep vacuum evacuation uses a vacuum pump to create a pressure of _____.
    A. 25 in. Hg vacuum
    B. 250 mm Hg
    C. 1500 microns
    D. 250 microns
25. To perform a triple evacuation, a technician pulls a vacuum and then charges the system with dry nitrogen to a pressure of _____.
    A. 0–3 psig
    B. 10–25 psig
    C. 100–150 psig
    D. 500–800 psig
26. Adding refrigerant to a refrigeration system is called _____.
    A. recovery
    B. charging
    C. evacuation
    D. recycling
27. To charge a system with liquid refrigerant, a technician should charge refrigerant into the _____.
    A. high side
    B. compressor
    C. low side
    D. evaporator
28. The proper charge of refrigerant in a system is best specified in terms of the refrigerant's _____.
    A. volume
    B. density
    C. weight
    D. specific gravity
29. When liquid charging a zeotrope into the low side, which device is installed to prevent liquid refrigerant from entering the compressor from the low side?
    A. piercing valve
    B. Schrader valve
    C. metering device
    D. vacuum gauge
30. To retrofit a system, a technician should contact _____ to identify which components need to be replaced.
    A. a reclamation center
    B. the equipment owner
    C. a service company
    D. the original equipment manufacturer

Copyright Goodheart-Willcox Co., Inc.

CHAPTER 12 Basic Electricity

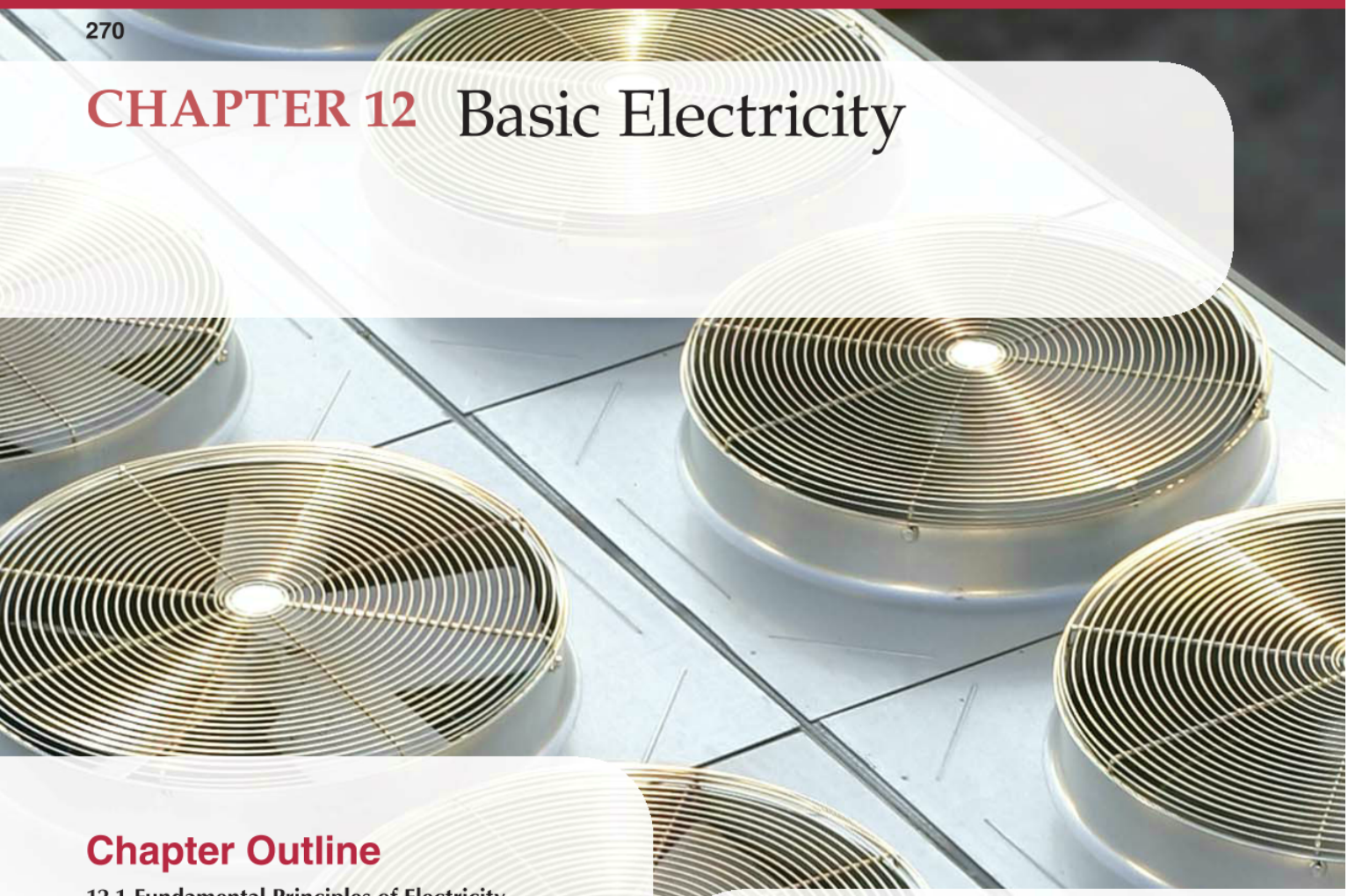

Chapter Outline

12.1 Fundamental Principles of Electricity
- 12.1.1 Electromotive Force and Current
- 12.1.2 Resistance
- 12.1.3 Ohm's Law
- 12.1.4 Capacitance

12.2 Types of Electricity
- 12.2.1 Static Electricity
- 12.2.2 Current Electricity

12.3 Electrical Materials
- 12.3.1 Conductors
- 12.3.2 Insulators
- 12.3.3 Semiconductors

12.4 Circuit Fundamentals
- 12.4.1 Circuit Symbols
- 12.4.2 Series Circuits
- 12.4.3 Parallel Circuits
- 12.4.4 Series-Parallel Circuits
- 12.4.5 Voltage Drop

12.5 Magnetism
- 12.5.1 Permanent and Induced Magnetism
- 12.5.2 Electromagnetism

12.6 Electrical Generators
- 12.6.1 AC Generator
- 12.6.2 DC Generator

12.7 Transformer Basics

Learning Objectives

Information in this chapter will enable you to:

- Identify the parts of an atom.
- Use Ohm's law to explain the mathematical relationship among voltage, current, and resistance.
- Contrast the properties and applications of static electricity, direct current, and alternating current.
- Summarize the three types of materials used in electrical and electronic parts and systems.
- Design diagrams of series, parallel, and series-parallel circuits.
- Use formulas to calculate the voltage drop across an electrical load.
- List the components of an electromagnet and factors that affect the strength of its magnetic field.
- Explain how electrical generators use magnetism to create electricity.
- Summarize how electricity flows between the coils of a transformer.

Technical Terms

alternating current (ac)
ampere
atom
brushes
capacitance
capacitor
closed circuit
commutator
conductor
coulomb
current
current electricity
dielectric
direct current (dc)
electrical circuit
electrical load
electricity
electromagnet
electromagnetism
electromotive force (emf)
electron
farad (F)
induced magnetism
induction
insulator
magnetic field
magnetic flux
neutron
nucleus
ohm
Ohm's law
open circuit
parallel circuit
primary coil
proton
resistance
resistor
secondary coil
semiconductor
series circuit
series-parallel circuit
slip ring
static electricity
transformer
volt
voltage
voltage drop

Review of Key Concepts

Reviewing these concepts from earlier chapters will help you understand new concepts presented in this chapter:

- Substances that are good conductors of heat, such as copper, aluminum, and iron, are also good conductors of electricity. (Chapter 4)
- Dielectric strength is a measure of an insulating substance's ability to resist the flow of electrons. (Chapter 9)
- On service calls, reviewing a system's electrical wiring and component diagram can help a technician diagnose how malfunctioning components affect the system problem. (Chapter 3)

Introduction

Many of the components in an HVACR system are electrically operated. For example, the majority of compressors and fans are driven by electrically powered motors. These electrically powered motors operate by using magnets to generate motion. Electricity not only *operates* many parts of an HVACR system, but it also *controls* many parts of the system. For instance, electric relays open and close compressor and fan motor circuits when a desired temperature has been reached or when operating conditions become unsafe. Having a good understanding of basic electricity, electrical circuits, and the relationship between electricity and magnetism will help a technician install and troubleshoot electrical and electronic components.

Video

- Magnetism and Electromagnetism

12.1 Fundamental Principles of Electricity

In order to understand electricity, it is best to begin at the atomic level. All matter is composed of atoms. ***Atoms*** are the smallest part of any element and are, therefore, the basic building blocks of all matter. Each atom contains a ***nucleus***. The nucleus of each atom is made of subatomic particles called protons and neutrons. ***Protons*** are positively charged (+) atomic particles, while ***neutrons*** have no charge. Orbiting around the nucleus are electrons. ***Electrons*** are negatively charged (–) subatomic particles. **Figure 12-1** illustrates the basic structure of an atom.

An atom normally has the same number of electrons as protons, which means it has a *neutral charge*. When an atom has an imbalance of electrons and protons, it is ionized. If an atom has more electrons than protons, it is a *negatively charged* ion. If an atom has more protons than electrons, it is a *positively charged* ion. This difference in atomic charges causes electrons to flow between atoms.

To regain its balance of electrons and protons, a negatively charged ion gives up its extra electron to an adjacent atom. This atom then becomes a negatively charged ion and gives up its extra electron to the next adjacent atom. A chain reaction occurs that causes electrons to move from one atom to another because each atom is trying to balance its atomic charge. This flow of electrons from one atom to another is ***electricity***. See **Figure 12-2**.

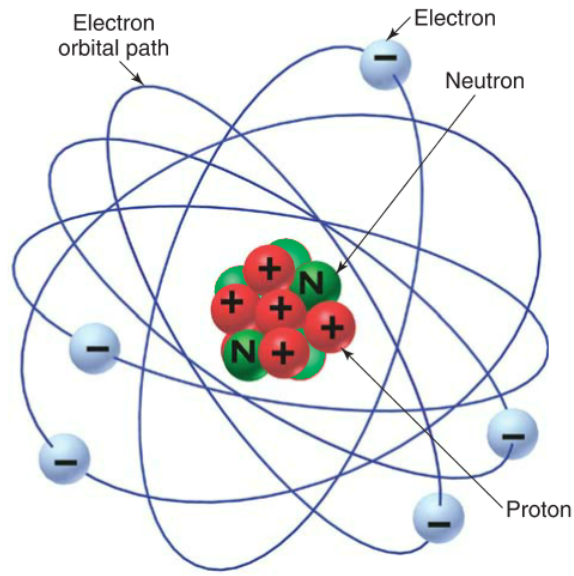

Goodheart-Willcox Publisher

Figure 12-1. Atoms are composed of protons and neutrons in the nucleus and electrons that orbit the nucleus.

12.1.1 Electromotive Force and Current

The flow of electrons is caused by a potential difference, which is the push created by a difference in atomic charges. This potential difference is called ***voltage*** or ***electromotive force (emf)***. Voltage is the electrical force or electrical pressure that a power source, such as a battery, can generate. The unit of measurement for voltage is the ***volt***. One volt is the amount of electromotive force required to send one ampere of current through a resistance of one ohm. Therefore, a nine-volt battery has enough electromotive force to send nine amperes of current through a resistance of one ohm.

Current is the flow of electrons. The flow of current is measured using a unit called the ***ampere***. One

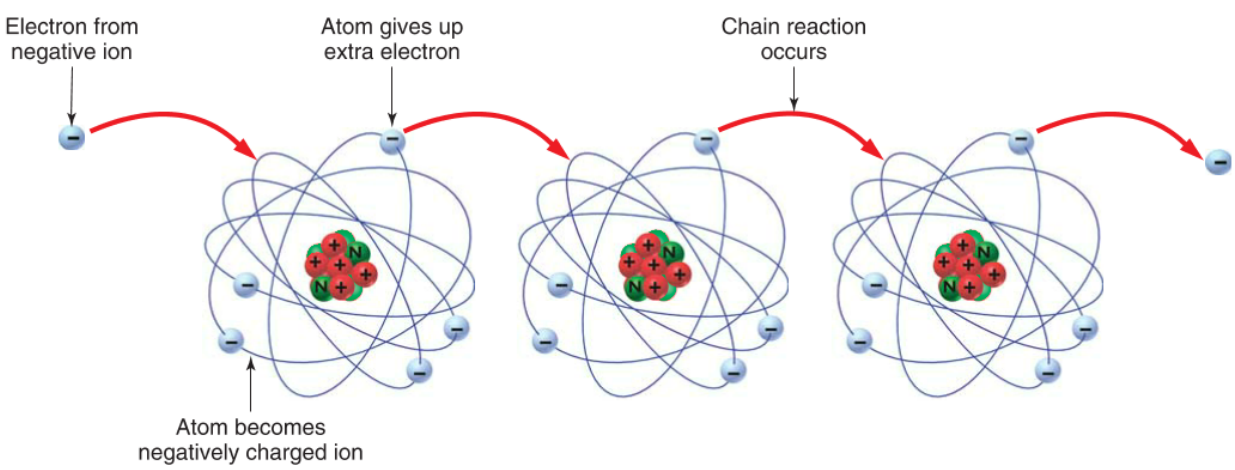

Goodheart-Willcox Publisher

Figure 12-2. The movement of electrons from one atom to another occurs because there is a difference in atomic charges between the atoms. This chain reaction of electron movement is electricity.

Copyright Goodheart-Willcox Co., Inc.

ampere is equal to the flow of one ***coulomb*** per second. A coulomb is a measure of the electrical charge in 6.24×10^{18} (6,240,000,000,000,000,000) electrons. Thus, if an electrical conductor, such as a copper wire, has a current of one amp, then 6.24×10^{18} electrons are flowing past any given point in the wire in one second.

Think of voltage as electrical pressure that causes electrical current to flow, just as fluid pressure causes the flow of gases and liquids. Water pressure causes water to flow through a hose. Increasing the water pressure increases the water flow, **Figure 12-3**.

In an electrical circuit, increasing the voltage increases the current. This parallels the principles of the combined gas law. In a fixed and unchanging volume, increasing a fluid's pressure will also increase its temperature. Likewise, in an electrical circuit with an unchanging resistance, increasing voltage will increase current (more electrons flowing). The effect of increasing the electrical pressure (voltage or emf) in an electrical circuit is shown in **Figure 12-4**.

12.1.2 Resistance

Different elements have different numbers of electrons in orbit around their nuclei, which affects whether the element allows electrons to flow with ease, with difficulty, or not at all. A copper atom allows electrons to flow because it has a single electron in its outermost orbit that it gives up easily to other copper atoms. This is why copper is an excellent conductor. Other elements, such as iron and carbon, conduct electricity, but have fewer free electrons in each atom. It is more difficult for electrons to travel through iron or carbon atoms than copper atoms.

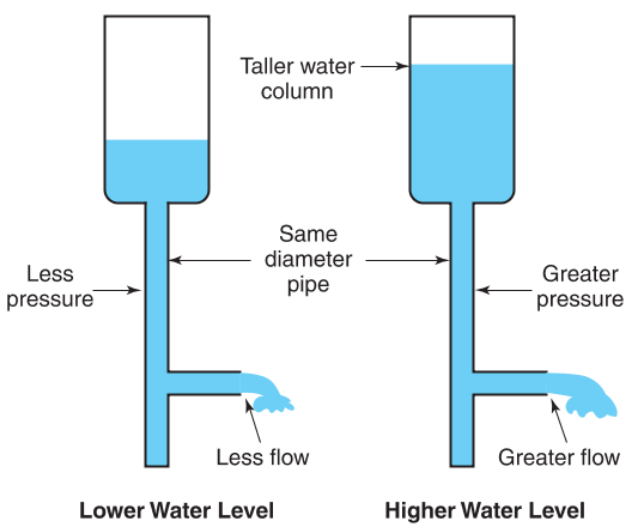

Goodheart-Willcox Publisher

Figure 12-3. The rate of flow depends on pressure. A shorter water column provides less pressure and less flow, and a higher water column provides more pressure and more flow.

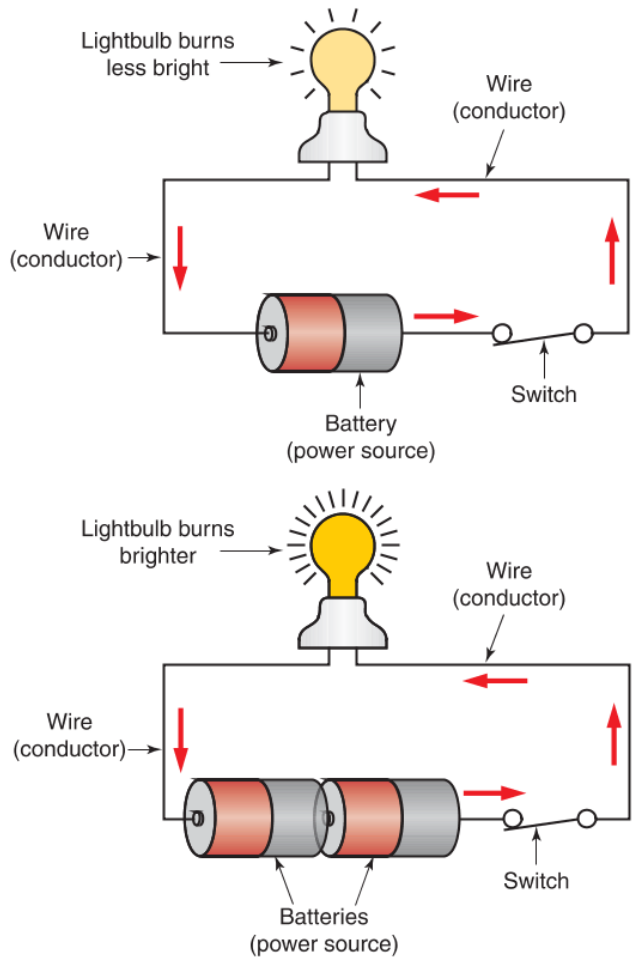

Goodheart-Willcox Publisher

Figure 12-4. The circuit with two batteries has twice the voltage or electrical pressure of the circuit with one. The increase in voltage leads to increased current, which causes the bulb to illuminate more brightly.

Resistance is the name of the electrical property that expresses how much a material resists the flow of electrons through it. The electrical resistance of a material is measured in ohms. An ***ohm*** is equal to the resistance that allows one volt to push one ampere of current through a circuit. In other words, if one ampere flows through a conductor when one volt is applied, then the conductor has a resistance of one ohm. The symbol for the ohm is the Greek letter omega (Ω).

Components designed to offer specific levels of resistance in a circuit are called ***resistors***. Resistors are often made of carbon and usually have a series of color bands that represent both the amount and accuracy of resistance. See the *Appendix* for a brief summary of these color bands, **Figure 12-5**.

Copyright Goodheart-Willcox Co., Inc.

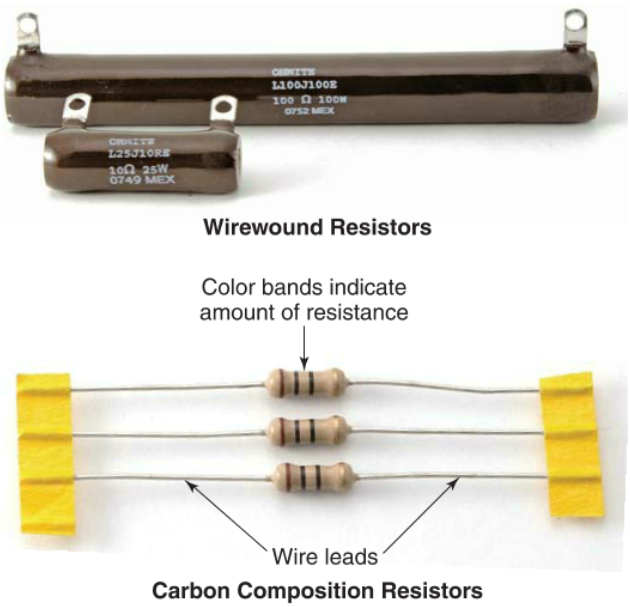

Goodheart-Willcox Publisher

Figure 12-5. Two of the many types of resistors used in electrical circuits in HVACR equipment.

The harder it is for electrons to move through a material, the greater the heat generated in that material. This is why iron, steel, and steel alloys are often used for electric heating purposes. Iron and steel have greater resistance than copper or silver, which means they produce more heat when current passes through them. Electrical resistance usually increases with an increase in temperature, an increase in conductor length, and a decrease in conductor diameter (thickness).

12.1.3 Ohm's Law

Looking at the earlier descriptions of voltage, current, and resistance, it is apparent that they have an interdependent relationship. How voltage, current, and resistance interact in a circuit is shown mathematically in ***Ohm's law***, **Figure 12-6**. The three variables in Ohm's law are represented by the following letters:

E = electromotive force (emf) or voltage in volts (V).
I = current in amperes (A).
R = resistance in ohms (Ω).
E (volts) = I (amperes) × R (ohms)

As shown in **Figure 12-6**, as long as you have the values of two of the variables, you can solve for the unknown variable. For instance, if a lamp draws 2 A at 120 V, what is its resistance? Since we are solving for resistance, the Ohm's law pie chart indicates to divide voltage by current.

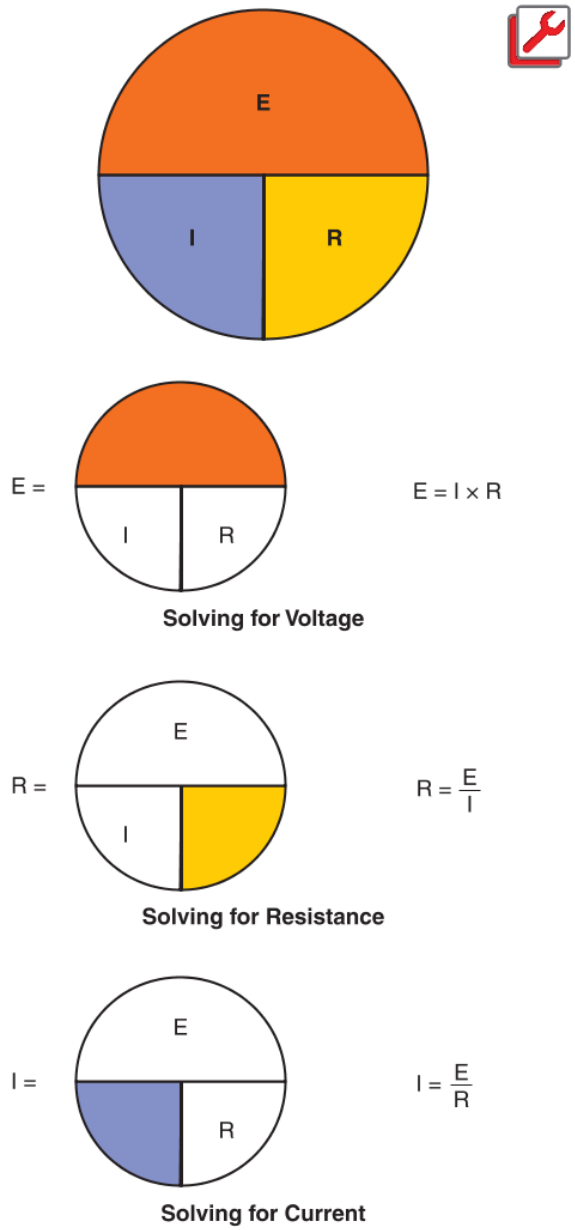

Goodheart-Willcox Publisher

Figure 12-6. Ohm's law can be used to calculate one variable when the other two are known. This pie chart will help you to remember which equation to use depending on which variable you are solving for.

$$R = \frac{E}{I}$$

$$R = \frac{120\ \text{V}}{2\ \text{A}}$$

$$R = 60\ \Omega$$

The equations of Ohm's law demonstrate a few principles concerning the relationship among voltage, current, and resistance. If a circuit's resistance remains

Copyright Goodheart-Willcox Co., Inc.

constant, an increasing voltage increases the current, or a decreasing voltage decreases the current. This means that in a circuit with a constant resistance, the values of voltage and current are *directly* related to each other. When one value rises, so does the other. When one value falls, so does the other.

For example, a technician is replacing a 120 V motor that normally runs at 5 A. The technician accidentally connects the 120 V motor to a 240 V power supply. The voltage is twice what it was. With the resistance remaining the same, the doubled voltage also doubles the current. This will cause trouble. If the fuse does not blow, the motor windings will overheat from carrying excessive current. The insulation on these wires will be destroyed, and the motor will be ruined.

Another principle demonstrated by Ohm's law is that when a circuit's voltage remains constant, lowering the resistance will increase the current, or increasing the resistance will decrease the current. This means that in a circuit with a constant voltage, the current and resistance are *inversely* related to each other.

For example, an electric heater draws 5 A of current. On a 120 V circuit, we can calculate the heater's resistance by dividing voltage by current: 120 V ÷ 5 A = 24 Ω. Now, replace that 5-amp electric heater with an electric heater that draws 25 A. Both heaters operate when 120 V are applied, but while the first heater only drew 5 A, the second heater drew 25 A. The voltage remained the same, so why is the amount of current different?

According to Ohm's law, the resistances must be different. To confirm this, calculate the 25-amp heater's resistance by dividing voltage by current: 120 V ÷ 25 A = 4.8 Ω. As the resistance decreased from 24 Ω to 4.8 Ω, the current responded inversely by increasing from 5 A to 25 A.

12.1.4 Capacitance

Capacitance is the ability of a material to store a charge of free electrons or electrical energy in an electrostatic field. Capacitance is represented in equations by the letter *C*. The unit of capacitance is the ***farad (F)***, which is defined as a charge of one coulomb on a capacitor surface with a potential difference of one volt. In other words, a capacitor with a charge of one farad has enough free electrons stored to discharge one volt of electrical pressure. A farad is a rather large unit of capacitance. Most capacitors used in HVACR systems are rated in microfarads. A microfarad is one-millionth (0.000001) of a farad, and the symbol for the microfarad is µF.

Capacitors are devices that are specifically designed and used for their capacitance (ability to store free electrons). Capacitors are composed of two metal surfaces, such as aluminum, separated by an insulating material called a ***dielectric***. See **Figure 12-7**. Capacitors are classified by their dielectric material. These include mica, paper, oil, and ceramic. **Figure 12-8** shows several types of capacitors.

In HVACR systems, capacitors are widely used on control circuit boards and also in motor circuits. Capacitors can be used to help start motors, to increase motor efficiency, and to improve a circuit's power factor. How a capacitor affects motor operation will be covered in Chapter 15, *Electric Motors*.

Safety Note

Charged Capacitor

Never assume a capacitor has been discharged. A high-voltage capacitor may store as much as 600 V. Before handling or replacing a capacitor, drain off its charge with a 20,000 Ω (20 kΩ) resistor. Place the capacitor in a box in case it ruptures. Wear insulated gloves and place the 20 kΩ resistor across both terminals for a couple of seconds.

5

12.2 Types of Electricity

Electricity is classified as either static electricity or current electricity. ***Static electricity*** is defined as the accumulation of an electric charge, such as in a capacitor. Static electricity is electricity at rest. ***Current electricity*** is electricity flowing through conductors (wires).

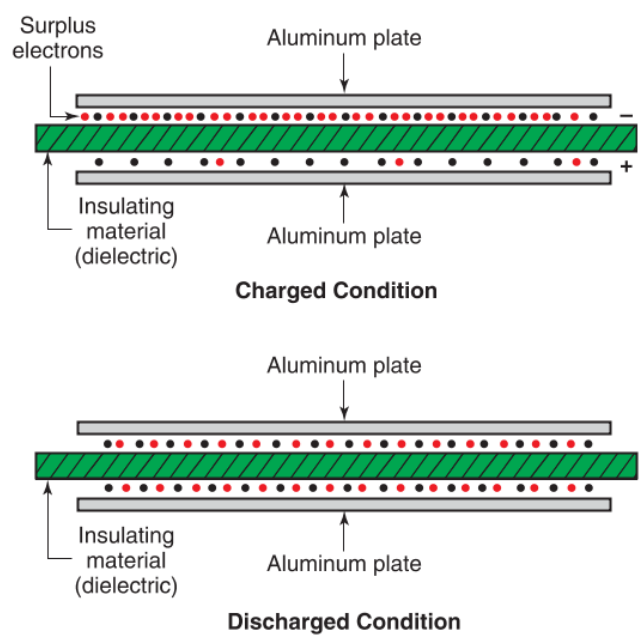

Goodheart-Willcox Publisher

Figure 12-7. This cross-section drawing shows the basic construction of a capacitor, illustrating the location of electrons during the charged and discharged conditions.

Copyright Goodheart-Willcox Co., Inc.

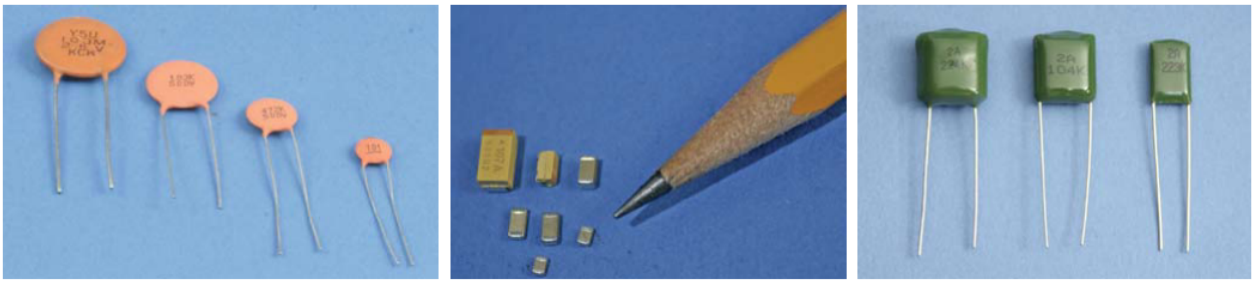

Ceramic Capacitors | Ceramic Chip Capacitors | Polyester Film Capacitors

Goodheart-Willcox Publisher

Figure 12-8. These are a few of the many types, shapes, and sizes of capacitors.

12.2.1 Static Electricity

There are two kinds of static charges: positive and negative. An object with a negative charge has accumulated more electrons than protons, and an object with a positive charge has more protons than electrons. Objects with the same kind of charge repel each other (push apart). Objects with different charges attract each other.

A common example of static electricity generation is when a person in a dry environment walks across a carpet. Negative charges flow from the carpet to the person due to friction. This charges the entire body with a negative charge. When the person touches a filing cabinet, faucet, or any other object that may have a positive charge, the negative static charge, which is attracted to the positively charged object, will quickly jump to what is touched. There may be a visible or audible spark as the negatively charged person touches the positively charged item.

Lightning is another example of the discharge of static electricity. Under certain conditions, materials, such as paper and clothing, can become charged with static electricity as well. That is why they sometimes cling together. Static electricity is often produced by materials rubbing against each other.

Static electricity does not have a wide range of practical uses, but an HVACR service technician may encounter static electricity in a few applications. Certain types of capacitors are used to store a static charge that can be used later. For example, a motor capacitor stores electricity that is needed to help a motor start. Static electricity is also used to filter the air. Electrostatic air cleaners use static electricity to attract and filter out dust and other small particles from an airstream.

12.2.2 Current Electricity

Current electricity is the movement of electrons along an electrical conductor. For example, pushing the button on a doorbell closes the circuit, causing electrons to flow through the circuit. This electrical flow rings the bell. There are two common types of electric current: direct current (dc) and alternating current (ac).

Direct Current

Direct current (dc) is electron flow along a conductor in one direction. It is the type of current produced by batteries. A flashlight is a simple example of direct current circuit, **Figure 12-9**.

Direct current's chief uses are in electronics, portable power tools, elevator operation, electric welding, and automobiles. Generally, in both elevator operation and electric welding, direct current is generated at the site. One way of generating a direct current involves rectifying an alternating current. This means that the ac current is converted into dc current using an electrical device called a rectifier. Direct current can also be generated by driving a

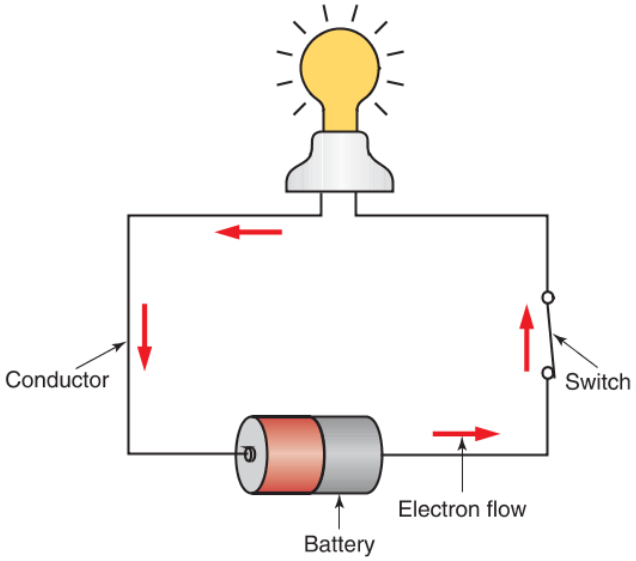

Goodheart-Willcox Publisher

Figure 12-9. A battery produces direct current, which flows in only one direction. Electrons flow from the negative terminal of the battery through the lightbulb to the battery's positive terminal.

Copyright Goodheart-Willcox Co., Inc.

dc generator with an ac motor or by driving a dc generator with a gasoline or diesel engine.

Alternating Current

Alternating current (ac) is electron flow along a conductor first in one direction, then in the other. Alternating current switches its direction of flow at regular intervals. The regular intervals at which an alternating current switches its direction can be graphed to form a sine wave, as shown in **Figure 12-10**.

In ac, the voltage starts at zero. Positive voltage represents current flowing in one direction, and negative voltage represents current flowing in the other direction. The time it takes for the voltage to peak in both the positive and negative directions and return to zero is called a cycle.

An alternating current's frequency is the number of cycles that occur per second. Frequency is measured in Hertz (Hz). One Hz equals one cycle per second. In the United States, the standard frequency for ac current is 60 Hz. This means that the ac current changes direction 120 times per second. The peak voltage (V_{max}) depends on the voltage supplied by the power source.

12.3 Electrical Materials

There are three physical electrical materials that are used in electrical and electronic systems:

- Conductors—metals such as copper, silver, and aluminum.
- Insulators—nonmetals such as glass, wood, paper, and mica.
- Semiconductors—metalloids such as silicon and germanium.

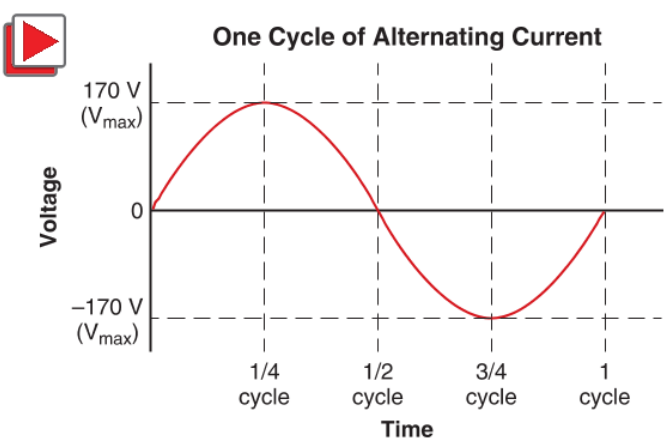

Goodheart-Willcox Publisher

Figure 12-10. The red line represents one complete cycle of alternating current flow in a typical household circuit. Note that the voltage varies from zero to V_{max} twice each cycle.

12.3.1 Conductors

Conductors are materials that allow electrons to flow easily. Most electrical conductors are made of metal. However, some metals are better conductors than others. Each element allows free electrons to move with varying ease. Silver, gold, copper, and aluminum are very good conductors of electricity. Iron, steel, and carbon will also conduct electricity, but their resistance is relatively high.

A conductor has atoms with free electrons in its structure. Any electromotive force (voltage) will cause these electrons to travel from one atom to another. This is the electrical energy moving through the material. In a wire, for example, energy moves from one end to the other, **Figure 12-11**. Note that dc electron movement is from negative (–) to positive (+).

Wires (solid or stranded) are used for carrying electricity from one electrical device to another. Stranded wire is more flexible than solid wire, **Figure 12-12**.

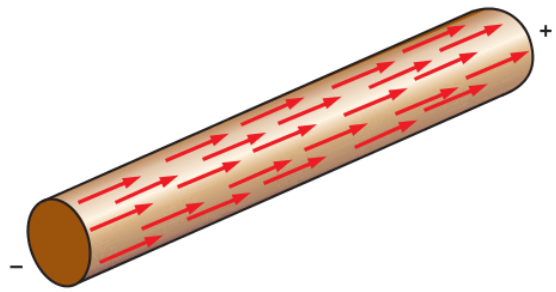

Goodheart-Willcox Publisher

Figure 12-11. This image illustrates a wire with free electrons traveling from negative (–) to positive (+).

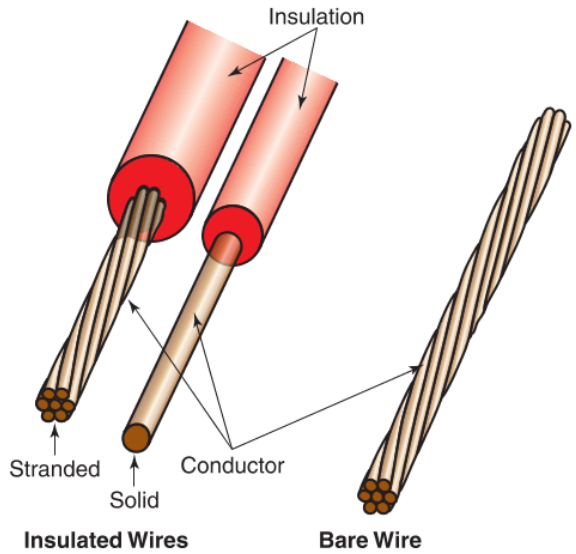

Goodheart-Willcox Publisher

Figure 12-12. Wires may have stranded or solid conductors, depending on the size of the wire and the flexibility requirements.

Copyright Goodheart-Willcox Co., Inc.

12.3.2 Insulators

Insulators resist electron flow. The atoms in an insulator have virtually no free electrons. A perfect vacuum is also an insulator. The use of insulators in electrical systems is just as crucial as the use of conductors or semiconductors. There are many parts of a system in which electrical current must be stopped. Insulators are needed for this purpose. Some common insulators are quartz, ceramics, mica, glass, rubber, wood, paper, and plastics.

12.3.3 Semiconductors

Semiconductors are ordinarily insulators; however, under certain conditions, they can be made to conduct electricity. These materials are the basis of the modern electronics industry. The term *solid-state electronics* refers to electronic devices that are made up of semiconductor elements. The term *solid-state* specifically refers to the way these devices can switch from insulator to conductor without moving parts.

Transistors and diodes are common semiconductors. Many modern motor controls consist of silicon controlled rectifiers (SCRs). An SCR is a type of electronic switch that does not conduct electricity until it is triggered by a certain voltage level. The conductivity of a semiconductor can be controlled by an electrical signal, light intensity, pressure, temperature, and other signaling devices. In this way, semiconductor devices often serve as electronic relays or switches. For example, photocells used on automatic door openers are semiconductor switching devices activated by light.

12.4 Circuit Fundamentals

An ***electrical circuit*** provides a complete path for electrons to follow. An electrical circuit has three main components: a power source, conductors, and an electrical load. The power source can be a generator, a battery, or the electrical outlets in a building. Any device that consumes electricity to perform work, such as a lightbulb, is an ***electrical load***. When speaking of electrical circuits, an electrical load is often simply called the *load*.

Conductors are usually copper wires that connect the power source and electrical load, allowing electrons to flow. When conductors are used to connect a battery to a lightbulb, a lightbulb to a switch, and a switch to the battery, an electrical circuit is made. Refer back to **Figure 12-9**.

If the switch is closed, the electron path is complete, and the bulb will light up. This is a ***closed circuit***. The electrons are able to leave the power source and return back to it. A closed circuit may also be called a *continuous circuit*. An ***open circuit*** means that an electrical switch or other device is open or disconnected, and current cannot flow. See **Figure 12-13**.

12.4.1 Circuit Symbols

Electrical wiring diagrams use symbols to represent many of the electrical parts found in HVACR systems. The symbols used for each electrical or electronic component are designated in the following technical standards: IEEE 315-1975, which is published by the Institute of Electrical and Electronics Engineers, and ASME Y14.44-2008, which is published by the American Society of Mechanical Engineers. **Figure 12-14** shows many of the electrical symbols you may encounter as a technician.

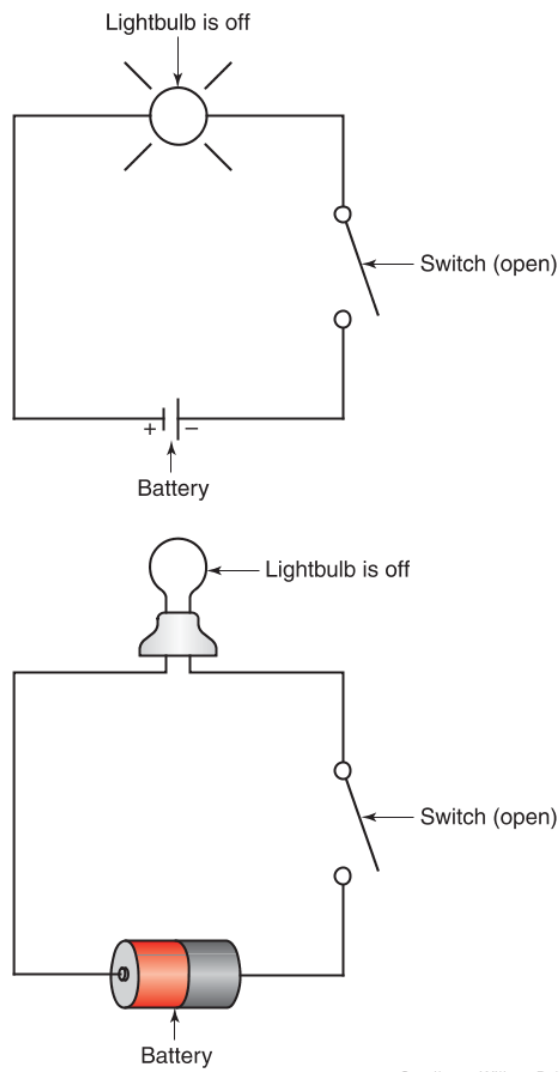

Goodheart-Willcox Publisher

Figure 12-13. This circuit is open because the switch is disconnected. The top drawing is a schematic drawing of the circuit, and the bottom image is a pictorial diagram of the same circuit.

Copyright Goodheart-Willcox Co., Inc.

Electrical Symbols for HVACR Diagrams							
Component	**Symbol**	**Component**	**Symbol**	**Component**	**Symbol**	**Component**	**Symbol**
Capacitor	*Identifying terminal (nearest ground)	Thermocouple		**Switches**		General selector switch	Any number of transmission paths may be shown
Circuit breakers	Thermal Magnetic	Transformer		Single throw		Segment contact	or
Relay, timer, solenoid, etc.	*Designate device	Thermal overload coil		Double throw		Thermal relay	
Contacts	Normally open (NO) Normally closed (NC) Timed closed (TC) Timed open (TO)	Terminal		Double pole double throw		**Motors**	
Conductors	Crossing Junction	Thermistor		Push button (NO)	Circuit closing (make)	General	
Fuse		**Connectors**		Push button (NC)	Circuit opening (break)	Windings	Main Aux.
Fusible link		Male		Push button (Two circuit)	No spring return	**Conductors**	
Ground connection		Female		Pressure activated	(NO) (NC)	Power (factory wired)	
Light		Engaged		Temperature activated (NO)	Close on rising	Control (factory wired)	
Meter	*Denote usage	4 Conductor		Temperature activated (NC)	Open on rising	Power (field installed)	
Diode		**Alarms**		Flow activated (NO)	Close on increase	Control (field installed)	
Resistor		Bell		Flow activated (NC)	Open on increase	**Transistors**	
Shielded cable		Horn		Liquid level (NO)	Close on rising	PNP type	
Multiple conductor cable		Buzzer		Liquid level (NC)	Open on rising	NPN type	

Goodheart-Willcox Publisher

Figure 12-14. Electrical symbols commonly used in wiring diagrams.

5

Copyright Goodheart-Willcox Co., Inc.

Pro Tip

Electrical Symbols in Diagrams

Manufacturers of HVACR equipment sometimes use their own symbols for electrical components. HVACR service technicians should always check the symbol for a component by comparing the wiring diagram with what is physically in the unit.

12.4.2 Series Circuits

A circuit having only a single path for current is called a ***series circuit***. The same current flows through all the electrical loads in a series circuit, **Figure 12-15**. If one of these devices is open or does not conduct, the circuit is broken and will not conduct current.

Since failure of a single component causes the whole of a series circuit to fail, a series circuit may be used as a safety circuit. For instance, when a power switch, a safety limit switch, and a fuse are wired in series with a compressor, any one of these devices can open and stop compressor operation in an unsafe situation. However, series circuits are rarely used in power circuits for the same reason. One component can cause the failure or apparent failure of every other component in series.

Remember that Ohm's law states that current is determined by the amount of voltage divided by the amount of resistance applied across a device. Since the voltage applied to a series circuit treats the entire circuit as a single resistance, the current flowing through each device is calculated by dividing the total applied voltage by the total circuit resistance. Using **Figure 12-15** as an example, the total resistance of the circuit is 12 Ω (3 Ω + 4 Ω + 5 Ω = 12 Ω). Therefore, the current throughout the whole circuit is 1 A, as 12 V ÷ 12 Ω = 1 A.

While current stays the same through each device in a series circuit, the voltage across each device will differ, depending on the resistance of each device. Using **Figure 12-15** as an example again, the first lightbulb has a resistance of 3 Ω. According to Ohm's law, the voltage across it is 3 V because voltage equals resistance multiplied by current (3 Ω × 1 A = 3 V). Each lightbulb in this series circuit has a different voltage across it because each bulb has a different amount of resistance.

12.4.3 Parallel Circuits

A ***parallel circuit*** allows current to flow to and from a power source along two or more electrical paths, each of which has only one electrical load, **Figure 12-16**. The electrical wiring in a house is an example of a parallel circuit. If one of the bulbs burns out, the rest continue to light because their paths to and from the power source remain complete. If the lights in a house were wired in series, then the failure of any one of the lights would cause all the lights in the house to go out. This is why power circuits are wired in parallel.

Whereas the *current* is the same across each load in a *series* circuit, the *voltage* across each load is the same in a *parallel* circuit. This means that in a parallel circuit, current changes based on the resistance of each load. The load with the *lowest resistance* receives the *highest current*, and the load with the *highest resistance* receives the *lowest current*. Looking at **Figure 12-16**, you can see that the lightbulb with the lowest resistance (3 Ω) has the most current (4 A), and the lightbulb with the highest resistance (6 Ω) has the least current (2 A).

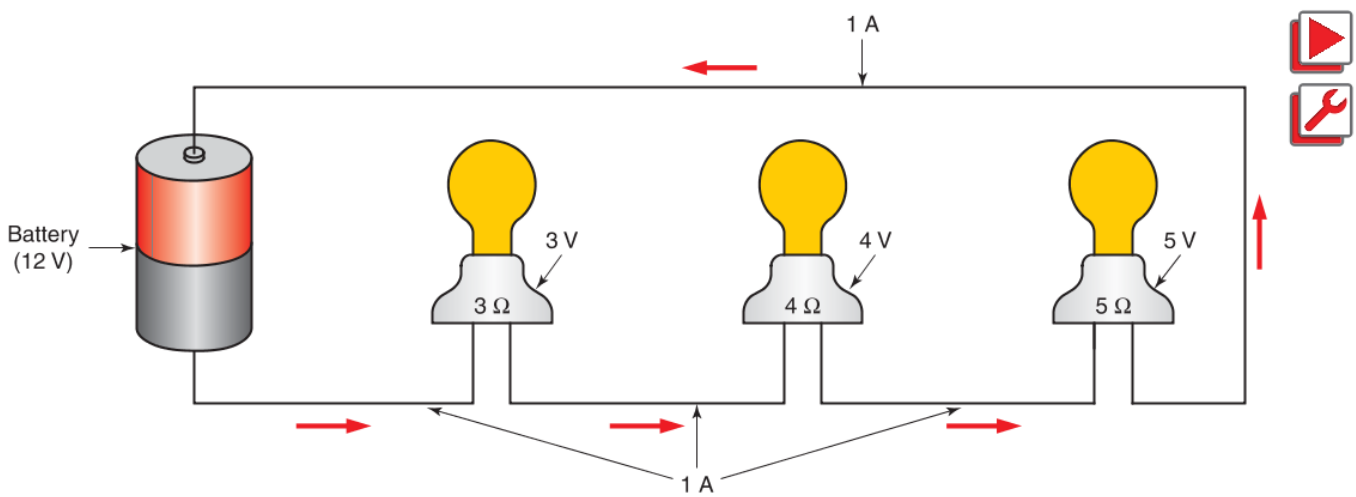

Goodheart-Willcox Publisher

Figure 12-15. In a series circuit, current only has one path to follow. Therefore, current is equal at each point of the circuit. Notice that the current is 1 A at each point between the lightbulbs. However, the voltage is different across each lightbulb because each lightbulb's resistance is different.

Copyright Goodheart-Willcox Co., Inc.

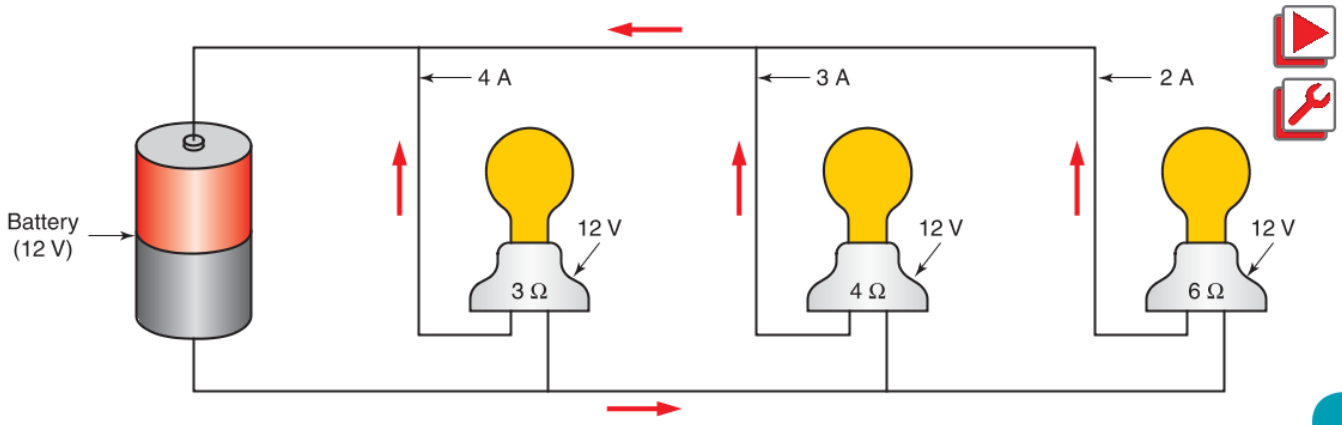

Goodheart-Willcox Publisher

Figure 12-16. These lightbulbs are wired in a parallel circuit. If one of the bulbs burns out, the rest of the bulbs will continue emitting light. Note that each bulb receives the same voltage, regardless of its resistance.

5

12.4.4 Series-Parallel Circuits

A circuit that has some electrical loads in series and some in parallel is called a ***series-parallel circuit***. Electronic control boards are often wired using a series-parallel circuit. It is rare that an HVACR technician will need to calculate expected voltages on a series-parallel circuit that has more than one electrical load in series. A theoretical example of a series-parallel circuit is shown in **Figure 12-17**.

The same principles of series and parallel circuits apply but in a complex combination. Start with the farthest combination of electrical loads and work backward to determine total resistance, so that total current can be calculated. Then begin applying the principles discussed. Electrical loads in series have the same current. Electrical loads in parallel have the same voltage. While knowledge of electrical circuits is important to know, calculating all the variables of series-parallel circuits is not normally done in day-to-day HVACR work.

12.4.5 Voltage Drop

A ***voltage drop (VD)*** is the voltage applied across an electrical load that is causing current to flow through it. Electrical loads are devices that offer some resistance to current passing through. Most electrical loads are intentional and perform some work or function, such as a motor or a relay coil. Others are unintentional and may cause a circuit to malfunction, such as dirty contacts, a poorly made connection, or wire that is too small for its application. Some electrical loads are so small within a circuit that they make virtually no difference. Examples would be clean contacts, correctly sized wire, and a properly

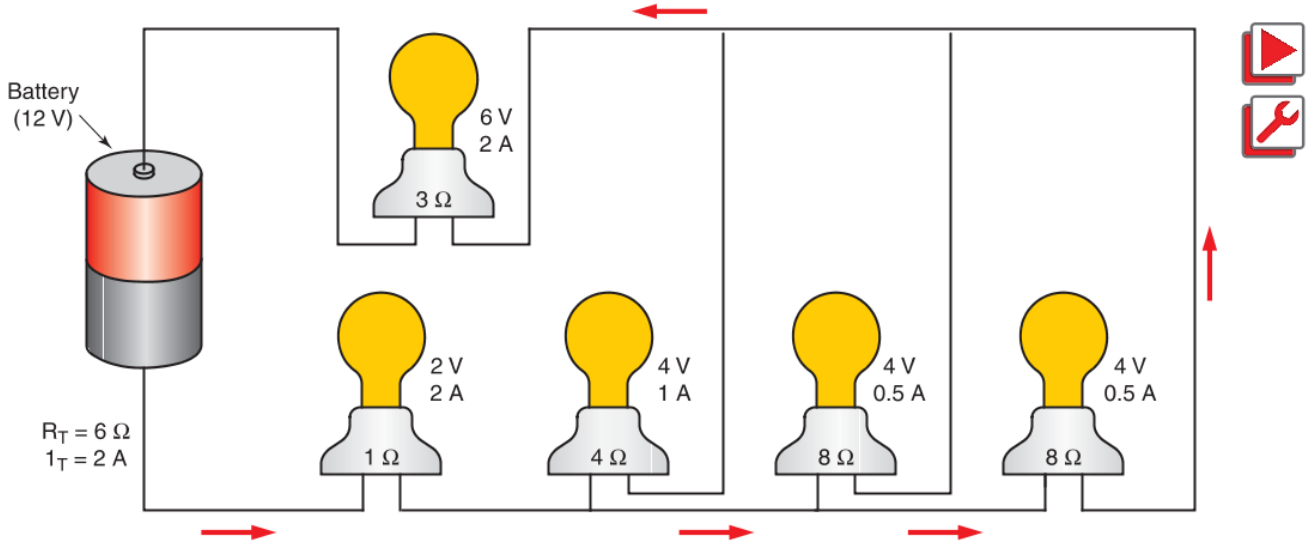

Goodheart-Willcox Publisher

Figure 12-17. This diagram shows a series-parallel circuit. Two loads are wired in series with three loads that are wired in parallel.

Copyright Goodheart-Willcox Co., Inc.

functioning switch. Such small electrical loads may not always be easily measurable, even with a multimeter.

The value of most voltage drops can be read with a voltmeter connected across an electrical load. Voltage drop (V_D) is equal to the resistance of a load (R_L) multiplied by the current (I_L) passing through that load:

$$V_D = R_L \times I_L$$

The total voltage drop (V_{DT}) of a circuit (the total applied voltage, V_T) in a series circuit equals the sum of the voltage drops of the electrical loads in the circuit:

$$V_{DT} \text{ or } V_T = V_{D1} + V_{D2} + V_{D3} + \ldots$$

Electrical loads in a parallel circuit will all have the same voltage drop, which equals the total voltage drop (V_{DT}) or the total applied voltage (V_T) of that parallel circuit:

$$V_{DT} \text{ or } V_T = V_{D1} = V_{D2} = V_{D3} = \ldots$$

Using **Figure 12-18** as an example, the total voltage supplied by the power source is 120 V, and the ammeter indicates that the current is 5 A. This is a series circuit, so current only has one path. This means that each of the electrical loads will have an identical current of 5 A flowing through it. Using this value for current, we can multiply by the resistance of each load to find each load's voltage drop.

Resistance of circuit wiring is 0.1 Ω:

$$V_{D1} = 5 \text{ A} \times 0.1\ \Omega = 0.5 \text{ V}$$

Resistance of thermostat switch is 0.1 Ω:

$$V_{D2} = 5 \text{ A} \times 0.1\ \Omega = 0.5 \text{ V}$$

Resistance of starting relay contacts is 0.1 Ω:

$$V_{D3} = 5 \text{ A} \times 0.1\ \Omega = 0.5 \text{ V}$$

Resistance of motor compressor is 23.7 Ω:

$$V_{D4} = 5 \text{ A} \times 23.7\ \Omega = 118.5 \text{ V}$$

By adding the individual voltage drops across each load, we can confirm the total voltage drop, which should equal the applied voltage.

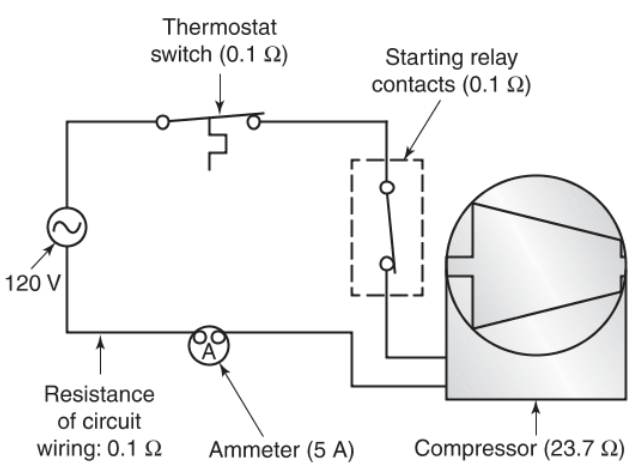

Goodheart-Willcox Publisher

Figure 12-18. To calculate voltage drop, measure the circuit's current and the resistance of each electrical load. These values can then be used to calculate each component's voltage drop.

$$V_{DT} = V_{D1} + V_{D2} + V_{D3} + V_{D4}$$
$$V_{DT} = 0.5 \text{ V} + 0.5 \text{ V} + 0.5 \text{ V} + 118.5 \text{ V}$$
$$V_{DT} = 120.0 \text{ V}$$

Measuring and calculating the current, resistance, and voltage across the individual loads in a circuit is critical to troubleshooting and problem solving. There is always some electrical resistance across any electrical switch, relay contacts, or circuit wiring. However, most voltage drops across such components are so low that they are usually negligible. When voltage drops across these components become higher, problems with the rest of the circuit can develop. Voltage drops of importance are those measured across motors, relay coils, and other higher resistance loads. Important values for current are those measured through motors and other significant loads.

12.5 Magnetism

All magnets have a north pole and a south pole. Like poles repel each other (try to move apart). Unlike poles attract (pull toward each other). The attraction and repulsion of magnetic poles is shown in **Figure 12-19**.

There are lines of magnetic force connecting the north and south poles of a magnet. These lines of force are called ***magnetic flux***. The space in which a magnetic force is operating is called a ***magnetic field***. Magnetic flux will flow through most substances. It is not stopped by glass, mica, wood, air, or any other material used for electrical insulation.

Some substances, particularly soft iron, are better conductors of magnetic flux than other substances. This is why certain parts of electric motors and generators are made of soft iron. Instruments can be shielded from a magnetic field by placing them inside a soft iron case. Because soft iron is a good conductor of magnetic flux, the magnetic field will pass around the instrument inside the soft iron case and not through it.

12.5.1 Permanent and Induced Magnetism

Permanent magnets are usually made of hardened steel. Once magnetized, they remain magnetized. Some patented alloys of iron, aluminum, nickel, and cobalt make strong permanent magnets.

Magnetic lines (flux) tend to become as short as possible. This shortening force has many industrial applications. Permanent magnets are used in some controls to provide a snap action for electrical contacts. They are also used in small control motors.

Copyright Goodheart-Willcox Co., Inc.

Any material capable of being magnetized becomes a magnet if it is placed in a magnetic field. This is called ***induced magnetism***. For example, if a piece of soft iron, which is a good magnetic conductor, is placed in a magnetic field, then the piece of soft iron becomes magnetized. Induced magnetism forms the basis for how an electromagnet is constructed.

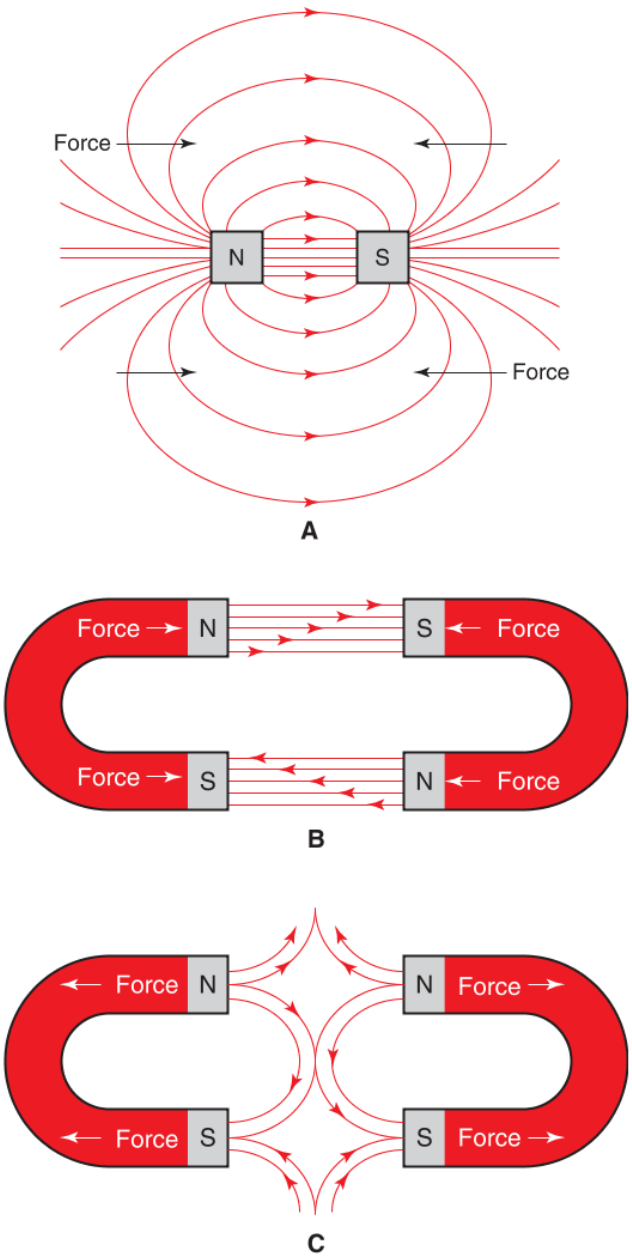

Goodheart-Willcox Publisher

Figure 12-19. Attraction and repulsion of magnetic poles. A—Looking at the end of a horseshoe magnet, the magnetic flux around each pole is shown. B—Magnetic flux provides a force that pulls unlike poles of magnets together. C—Magnetic flux provides a force that pushes like poles away from each other.

12.5.2 Electromagnetism

If an electric current is passed through a conductor, the conductor becomes surrounded by a magnetic field. If the current is turned off, the magnetic field will disappear, **Figure 12-20**.

If a conductor is wound around a piece of soft iron and current is passed through the conductor, the soft iron becomes a magnet. This is an example of induced magnetism. Turning off the current (opening the circuit) stops the magnetic effect. This magnetic effect caused by current is called ***electromagnetism***. Magnets formed in this manner are called ***electromagnets***. Electromagnets are used in motors, relays, solenoids, and in many other electromagnetic applications. The iron part is called the *core*. The current-carrying conductor is called the *winding*, **Figure 12-21**.

The strength of an electromagnet is based on four factors:

- Number of turns in the winding.
- Strength of the current.
- Core material and construction.
- Length of the coil.

The more coil turns there are in the winding and the higher the current is, the stronger the electromagnetism.

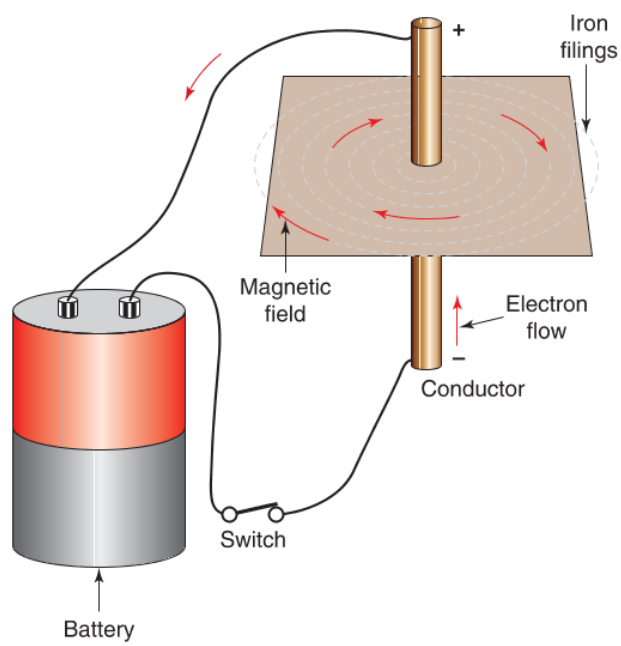

Goodheart-Willcox Publisher

Figure 12-20. A conductor is passed vertically through the center of a sheet of cardboard with iron filings sprinkled over the cardboard's surface. When the ends of the vertical conductor are connected to a battery, the iron filings form circular patterns, demonstrating the magnetic field around the conductor.

Copyright Goodheart-Willcox Co., Inc.

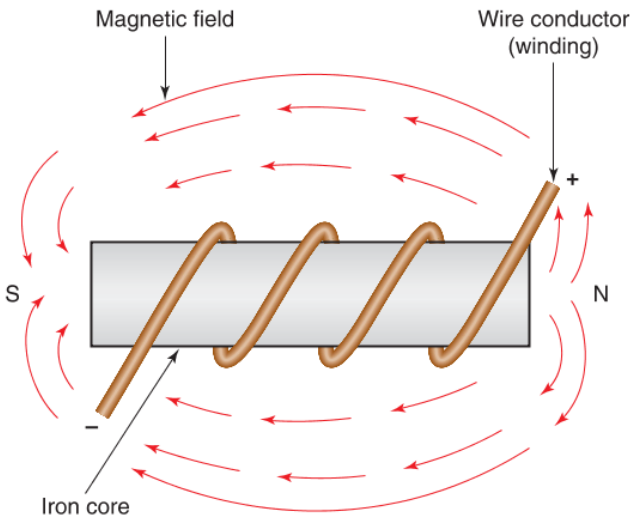

Goodheart-Willcox Publisher

Figure 12-21. A simple electromagnet has several turns of conductor (wire) placed around a soft iron core. When current is passed through the conductor, circular magnetic fields that form around the wire are combined in the core to form a single magnetic field.

Since materials react to electricity and magnetic flux differently, core material matters. A solid core results in fluctuations in the magnetic field that weaken the field. Therefore, a laminate core is used to create a stronger magnetic field than a solid core. The closer together a given number of windings are, the more concentrated (stronger) the magnetic field will be.

The number of turns in the coil and amount of current passing through them are the two most important factors in determining electromagnetic strength. These two factors determine the magnetomotive force (MMF), which is measured in *ampere-turns*. The magnetomotive force is the amount of energy used to generate a magnetic field. To calculate magnetomotive force, multiply the number of turns in the winding by the amperes flowing through the winding. The magnetomotive force is directly proportional to the strength of the magnetic field. However, the strength of a magnetic field can vary for any given magnetomotive force depending on core composition, style of coil winding, and other factors.

12.6 Electrical Generators

Just as electricity flowing through a conductor can be used to create electromagnetic force, magnets can be used to generate electricity. If a conductor is moved across a magnetic field, an electromotive force (emf) will be generated that induces current in the conductor. This can be done by forming a wire loop and rotating the loop in a magnetic field. See **Figure 12-22**.

12.6.1 AC Generator

When a loop rotates through a magnetic field, emf is generated. The amount of emf generated is dependent on the direction the legs of the loop are moving. Refer to **Figure 12-22**. When the legs of the loop are moving mostly perpendicular to the lines of magnetic force, a greater amount of emf is generated, resulting in more current in the loop. When the legs of the loop are moving mostly parallel to the lines of magnetic force, less emf is generated, resulting in less current in the loop. The rise and fall of emf during the rotation of the wire loop is represented by a sine wave of alternating current (ac), **Figure 12-23**.

In order to maintain an electrical connection to the rotating wire loop, ac generators have slip rings and brushes. A ***slip ring*** is a cylindrical piece of electrically conductive material that rotates with the wire loop. ***Brushes*** are electrically conductive materials that remain stationary as the slip rings rub against them. Electricity flows from the wire loop, through the slip rings, across the brushes, and into the circuit, **Figure 12-24**.

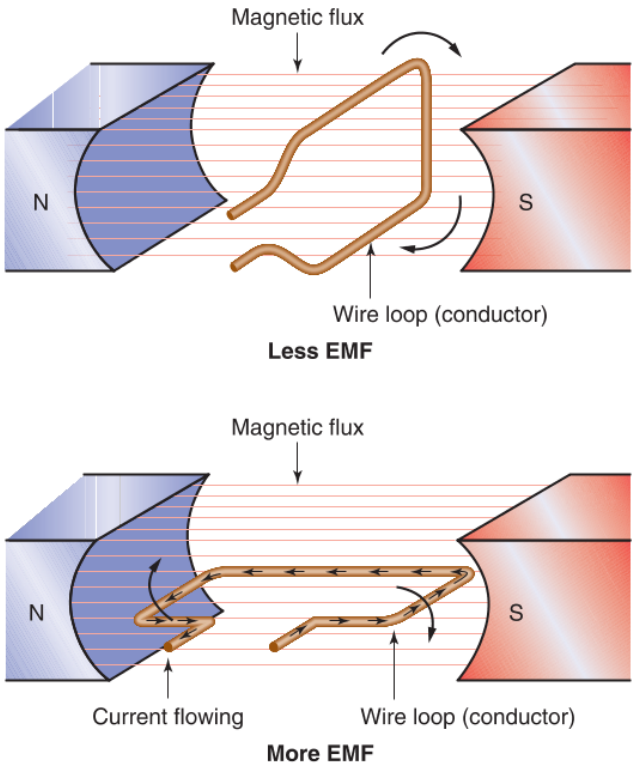

Goodheart-Willcox Publisher

Figure 12-22. When a loop is rotated through a magnetic field, current is induced in the loop. The amount of emf generated is dependent on the position of the loop in the magnetic field.

Copyright Goodheart-Willcox Co., Inc.

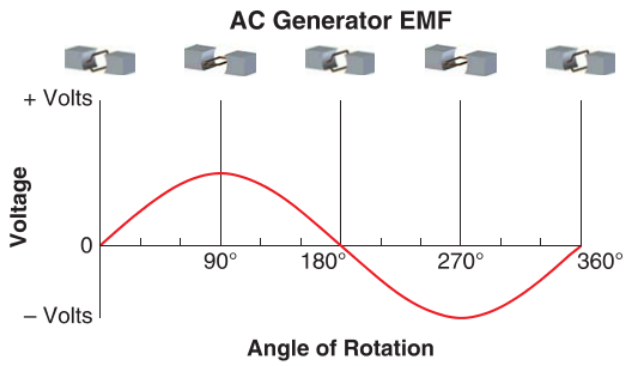

Goodheart-Willcox Publisher

Figure 12-23. The graph of this sine wave illustrates how the rise and fall of emf in the wire loop of an ac generator produces ac current.

12.6.2 DC Generator

A direct current generator creates electricity just as an ac generator does. Induced electricity in a generator is normally an alternating current, but a dc generator rectifies the electricity, so the output does not reverse its directional flow. To prevent the electricity from reversing direction, dc generators use a commutator. A ***commutator*** is a split slip ring that forces the current to flow in one direction only, generating direct current (dc). A commutator is a slip ring that is split in half by an insulating material, with each end of the wire loop (rotor) attached to one half of the ring, **Figure 12-25**.

Each half of a split ring commutator contacts one of the brushes during a half rotation. For the next half rotation, each half of the split ring contacts the other brush. By constantly reversing which brush each half of the split ring connects to, a commutator provides direct current to an external circuit. Electricity flows from the wire loop, through the commutator, across the brushes, and into the circuit.

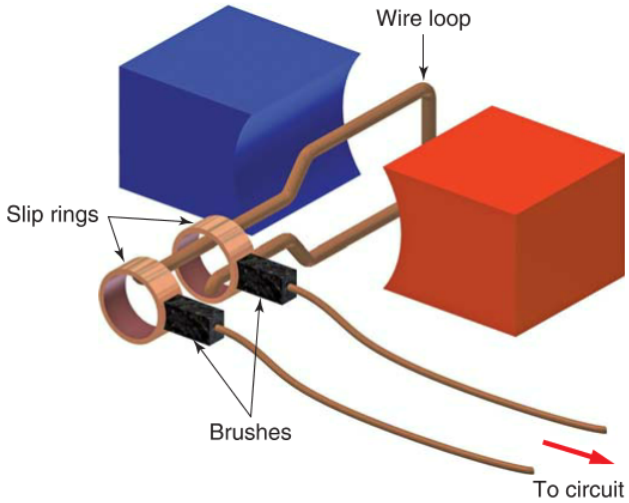

Goodheart-Willcox Publisher

Figure 12-24. An ac generator has slip rings attached to each end of the wire loop. The slip rings rub against the brushes, transferring electricity to the circuit.

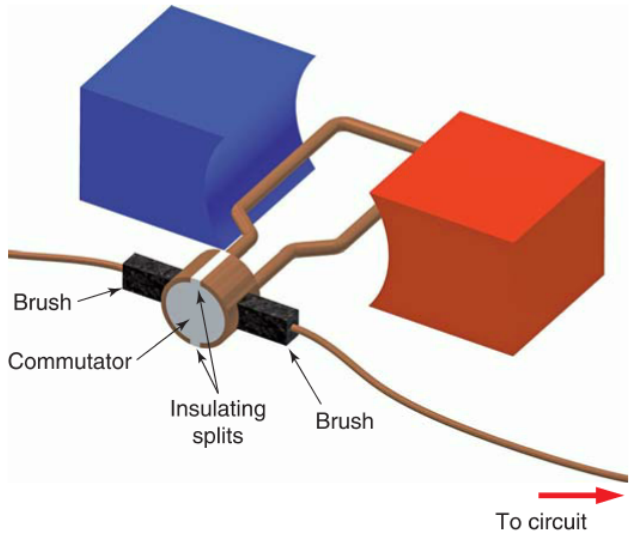

Goodheart-Willcox Publisher

Figure 12-25. While the wire loop rotates within the magnetic field, the commutator causes each half of the split ring to change the brush that it connects to at every half rotation of the loop. This creates direct current.

12.7 Transformer Basics

A transformer operates on the two basic principles that electricity can be used to generate a magnetic field, and a magnetic field can be used to induce electricity. A ***transformer*** transfers an alternating current from one coil of wire to another coil of wire through a magnetic field. The process of transferring electricity using a magnetic field is called ***induction***.

Two coils of wire are placed near each other with a small gap of air between them. An ac electrical source is connected to the first coil of wire called the ***primary coil***. The primary coil generates a magnetic field that is picked up by the second coil of wire called the ***secondary coil***. The magnetic field generated by the primary coil grows and shrinks repeatedly due to the alternating current flowing through it. The secondary coil converts the changes in the magnetic field into electricity.

The amount of voltage coming out of the secondary coil of a transformer is dependent on the voltage entering the primary coil and the same number of turns in each of the coils. If the primary coil has 100 turns and the secondary coil has 50 turns, the voltage exiting the transformer

Copyright Goodheart-Willcox Co., Inc.

will be half of the voltage entering the transformer. A transformer with more turns in its primary coil than in its secondary coil is a step-down transformer, **Figure 12-26**.

If the primary coil has 50 turns and the secondary coil has 100, the voltage coming out of the transformer will be twice that of the voltage entering the transformer. A transformer with more turns in its secondary coil than in its primary coil is a step-up transformer. See **Figure 12-27**.

The formula for calculating the number of turns required for a given voltage is as follows:

$$\frac{V_S}{V_P} = \frac{N_S}{N_P}$$

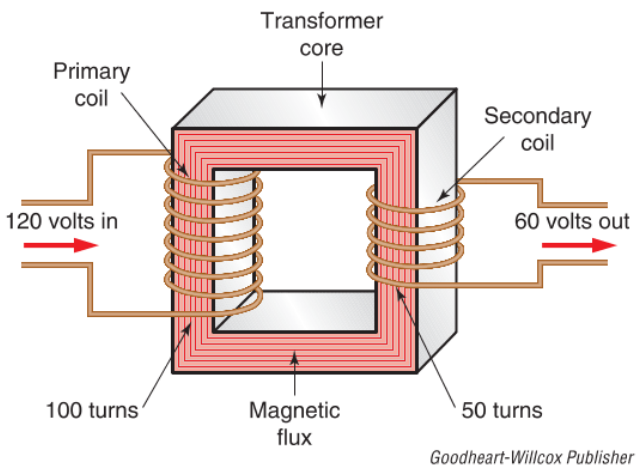

Figure 12-26. This is a step-down transformer because there are more turns in the primary coil than there are in the secondary coil.

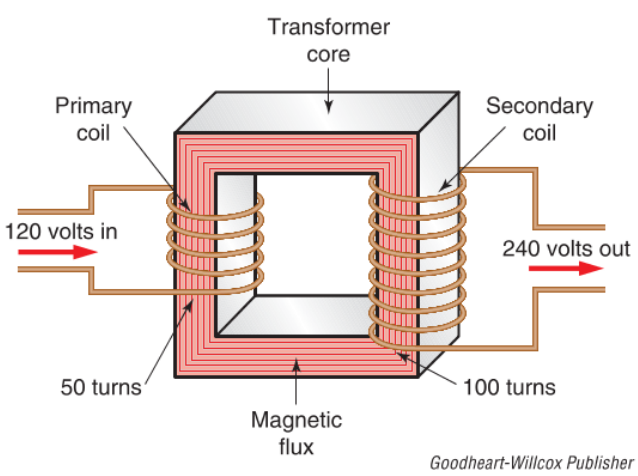

Figure 12-27. This is a step-up transformer because there are fewer wire turns in the primary coil than there are in the secondary coil.

V_P = primary voltage
V_S = secondary voltage
N_P = number of turns of wire in the primary coil winding
N_S = number of turns of wire in the secondary coil winding

Example:

How many turns of wire are required in a secondary coil if the desired output is 24 volts, the primary voltage is 120 volts, and the primary coil has 100 turns of wire?

Solution:

Solve for N_S (number of turns in the secondary winding) by isolating that variable:

$$\frac{V_S}{V_P} = \frac{N_S}{N_P}$$

Begin by plugging in the values that are known.

$$\frac{24}{120} = \frac{N_S}{100}$$

Isolate N_S on one side of the equal sign. To do this, multiply the fractions on each side of the equal sign by 100 (the value of N_P).

$$\frac{100}{1} \times \frac{24}{120} = \frac{N_S}{100} \times \frac{100}{1}$$

$$\frac{2400}{120} = \frac{100\,N_S}{100}$$

After calculating these amounts, reduce to whole numbers.

$$\frac{2400}{120} = \frac{100\,N_S}{100}$$

$$\begin{array}{r} 20 \\ 120\overline{)2400} \\ -\ 2400 \\ \hline 0 \end{array} = \begin{array}{r} 1 \\ 100\overline{)100}\,N_S \\ -\ 100 \\ \hline 0 \end{array}$$

$$20 = N_S$$

N_S = 20 turns of wire in the secondary coil

In later chapters, you will learn about the different types, sizes, and uses of transformers. This information is important when deciding which motor to use for a forced air system, what voltages to expect out of a transformer, and most importantly, what safety precautions to take.

Copyright Goodheart-Willcox Co., Inc.

Chapter Review

Summary

- The three components of an atom are electrons, protons, and neutrons. Electricity is the flow of electrons moving from one atom's orbit to another.
- The interdependent relationship of voltage, current, and resistance can be explained mathematically using Ohm's law: $E = I \times R$.
- In HVACR systems, capacitors are used to store electrical energy to help start motors, increase motor efficiency, and improve a circuit's power factor.
- There are two types of electricity: static and current. Static electricity is stored electricity, like the charge in a capacitor. Current electricity is electrons in motion and can be divided into two types: direct current and alternating current.
- Electrical and electronic systems utilize three types of materials: conductors, insulators, and semiconductors.
- A closed circuit provides a complete path for electrons to follow. An open circuit is an incomplete path in which current cannot flow. A basic electrical circuit has three components: a power source, a conductor, and a load.
- The total voltage drop in a series circuit equals the sum of the voltage drops of the electrical loads in the circuit. Electrical loads in a parallel circuit will each have the same voltage drop. Comparing applied voltage to the sum of the measured voltage drops can help in troubleshooting electrical circuits.
- If an electric current is passed through a conductor, the conductor becomes surrounded by a magnetic field. An electromagnet is made by winding a conductor around an iron core and connecting it to a power source.
- The strength of an electromagnet is affected by the number of turns in the winding, the strength of the current, the core material and construction, and the length of the coil.
- If a conductor is moved across a magnetic field, an electromotive force (emf) will be induced that generates current in the conductor. Electrical generators use this concept to create electricity by rotating a wire loop in a magnetic field. Electricity flows from the wire loop, through the slip rings, across the brushes, and into the circuit.
- A transformer transfers an alternating current from one coil of wire to another coil of wire using the following two principles: electricity can be used to generate a magnetic field, and a magnetic field can be used to induce electricity. The voltage coming out of the secondary coil of a transformer is dependent on whether it has more or less turns than the primary coil.

Review Questions

Answer the following questions using the information in this chapter.

1. Which of the following is *not* a part of an atom?
   A. Electron
   B. Coulomb
   C. Proton
   D. Neutron
2. The potential difference of atomic charges that forces electron flow is called _____.
   A. inductance
   B. voltage
   C. resistance
   D. capacitance
3. Current is measured in _____.
   A. coulombs
   B. amperes
   C. ohms
   D. farads
4. The electrical property that resists the flow of electrons is called _____.
   A. inductance
   B. voltage
   C. resistance
   D. capacitance
5. Resistance is measured in _____.
   A. coulombs
   B. amperes
   C. ohms
   D. farads
6. According to Ohm's law, if a circuit's resistance is 5 Ω and the voltage applied is 100 V, what is the current?
   A. 500 A
   B. 0.05 A
   C. 115 A
   D. 20 A

Copyright Goodheart-Willcox Co., Inc.

7. According to Ohm's law, if a circuit's resistance is 40 Ω and the current is measured at 4 A, what is the voltage?
   A. 160 V
   B. 10 V
   C. 44 V
   D. 0.1 V
8. The ability of a material to store a charge of free electrons or electrical energy is called _____.
   A. inductance
   B. voltage
   C. resistance
   D. capacitance
9. Capacitors are used in HVACR systems to do all of the following *except* _____.
   A. increase motor efficiency
   B. induce an alternating current from a magnetic field
   C. improve a circuit's power factor
   D. help to start motors
10. Electron flow along a conductor in one direction describes _____.
   A. static electricity
   B. current electricity
   C. direct current
   D. alternating current
11. Electricity that flows in one direction and then in the other describes _____.
   A. static electricity
   B. current electricity
   C. direct current
   D. alternating current
12. Which type of material resists electron flow?
   A. Conductors
   B. Insulators
   C. Semiconductors
   D. Magnets
13. Which type of material allows electrons to flow easily?
   A. Conductors
   B. Insulators
   C. Semiconductors
   D. Magnets
14. Which type of material can be designed to manipulate by light, pressure, heat, or electricity to either conduct or resist electron flow?
   A. Conductors
   B. Insulators
   C. Semiconductors
   D. Magnets
15. A circuit that allows the current to flow along two or more electrical paths at the same time is called a _____ circuit.
   A. open
   B. series
   C. parallel
   D. series-parallel
16. A circuit having only a single path for current is called a _____ circuit.
   A. open
   B. series
   C. parallel
   D. series-parallel
17. A circuit in which parts of it have only a single path for current and other parts have two or more electrical paths at the same time is called a _____ circuit.
   A. open
   B. series
   C. parallel
   D. series-parallel
18. Which of these devices has a north and a south pole?
   A. Conductor
   B. Insulator
   C. Semiconductor
   D. Magnet
19. To construct an electromagnet, all of the following are necessary *except* a(n) _____.
   A. current-carrying conductor
   B. power source
   C. iron core
   D. commutator
20. Name the electrically conductive, cylindrical part of an ac generator that rotates with the wire loop.
   A. Brush
   B. Slip ring
   C. Commutator
   D. Primary coil
21. Name the rotating part of a dc generator that is connected to the wire loop.
   A. Brush
   B. Slip ring
   C. Commutator
   D. Primary coil
22. Name the stationary part of a generator that transfers electricity to the circuit.
   A. Brush
   B. Slip ring
   C. Commutator
   D. Primary coil

Copyright Goodheart-Willcox Co., Inc.

23. Alternating current is transferred between primary and secondary transformer coils by means of _____.
    A. capacitance
    B. brushes
    C. a closed circuit
    D. induction
24. A transformer that has more turns in its secondary coil than in its primary coil is a _____ transformer.
    A. series
    B. parallel
    C. step-up
    D. step-down
25. A transformer that has more turns in its primary coil than in its secondary coil is a _____ transformer.
    A. series
    B. parallel
    C. step-up
    D. step-down

Copyright Goodheart-Willcox Co., Inc.

CHAPTER 13 Electrical Power

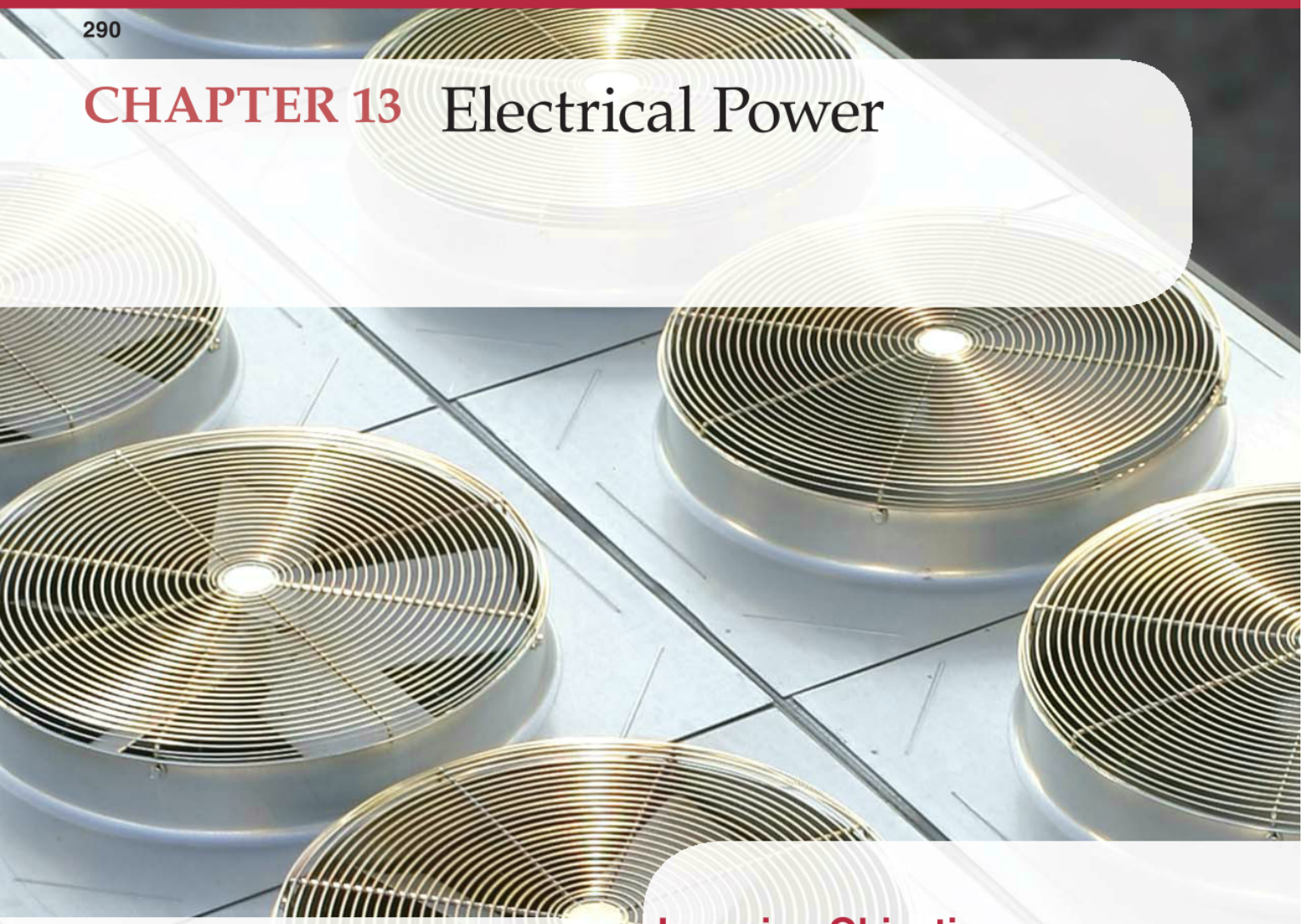

Chapter Outline

13.1 Electrical Power
- 13.1.1 Root Mean Square Values
- 13.1.2 Power Loss
- 13.1.3 Power Factor

13.2 Power Circuits
- 13.2.1 Single-Phase and Three-Phase Power
- 13.2.2 Electrical Codes
- 13.2.3 Wire Sizes
- 13.2.4 Connectors and Terminals
- 13.2.5 Receptacle and Plug Configurations
- 13.2.6 Circuit Protection
- 13.2.7 Grounding and Bonding

13.3 Electrical Problems
- 13.3.1 Short Circuit
- 13.3.2 Ground Fault
- 13.3.3 Overload
- 13.3.4 Unintentional Voltage Drop
- 13.3.5 Open Circuit

Learning Objectives

Information in this chapter will enable you to:

- Use mathematical formulas to calculate root mean square values, apparent power, and power factor.
- Summarize how resistance, inductive reactance, and capacitive reactance cause power loss and affect power factor in electrical circuits.
- Understand the difference between single-phase and three-phase power.
- Define a Class 2 circuit and identify the types of electrical connections an HVACR technician is permitted to make.
- Recall wire size terminology and connect wires using wire terminals and crimping.
- Explain the importance of properly grounding and bonding an electrical system.
- Describe the purpose and operation of various overcurrent protection devices used in circuits.
- Identify the different types and causes of common electrical problems.

Technical Terms

American Wire Gage (AWG)
apparent power
bonding
capacitive reactance
circuit breaker
Class 2 circuit
fuse
ground
ground fault
ground fault circuit interrupter (GFCI)
grounded conductor
grounding
inductance
inductive reactance
overload
power factor
root mean square (rms)
short circuit
single-phase
three-phase
true power
ungrounded conductor
unintentional voltage drop
volt-amperes (VA)
Watt's law
wattmeter

Review of Key Concepts

Reviewing these concepts from earlier chapters will help you understand new concepts presented in this chapter:

- Voltage is electrical pressure that causes current (electron flow) in a closed circuit. Voltage is measured in volts. Current is the flow of electrons and is measured in amperes. (Chapter 12)
- Resistance is the name of the electrical property that measures how much a material resists the flow of electrons through it. (Chapter 12)
- Alternating current switches its direction of flow at regular intervals. The regular intervals at which an alternating current switches its direction can be graphed to form a sine wave. (Chapter 12)
- An electrical circuit has three main components: a power source, conductors, and an electrical load. (Chapter 12)

Introduction

To understand electrical power, a technician must first understand how to calculate power in a circuit and how factors such as resistance and capacitance affect a circuit's power. A technician must also understand the types of power supplied by utility companies, the types and sizes of wire used in circuits, and the methods for properly connecting, grounding, and bonding an electrical system. In addition, being familiar with the different types of overcurrent protection devices and common electrical problems will make diagnosing electrical issues much easier for an HVACR technician. Understanding electrical power will enable a technician to install new components and troubleshoot malfunctioning components based on the power available in a given application.

Video

- Installing a Wiring Connector

13.1 Electrical Power

When current flows due to a potential difference (emf or voltage), there is electrical power. Electrical power is measured in watts (W), kilowatts (kW), and megawatts (MW). A kilowatt is equal to one thousand watts, and a megawatt is equal to one million watts. A *watt* is the power produced when one ampere of current flows through an electrical component due to a potential difference of one volt. In other words, a load uses 1 W of power if a current of 1 A flows through the load when it is connected to a 1 V power source.

The following formula can be used to calculate electrical power:

$$P = I \times E$$

P = power (watts)
I = current (amperes)
E = electromotive force or voltage (volts)

Example:

What is the power used by an electric motor that draws a current of 20 A from a 120 V power source?

Solution:

$$P = I \times E$$
$$P = 20\text{ A} \times 120\text{ V}$$
$$P = 2400\text{ W}$$

or, expressed in kilowatts,

$$P = \frac{2400\text{ W}}{1000}$$
$$P = 2.4\text{ kW}$$

Much like Ohm's law, the power formula makes it easy to solve for any three of these variables. This formula has been called ***Watt's law***, **Figure 13-1**.

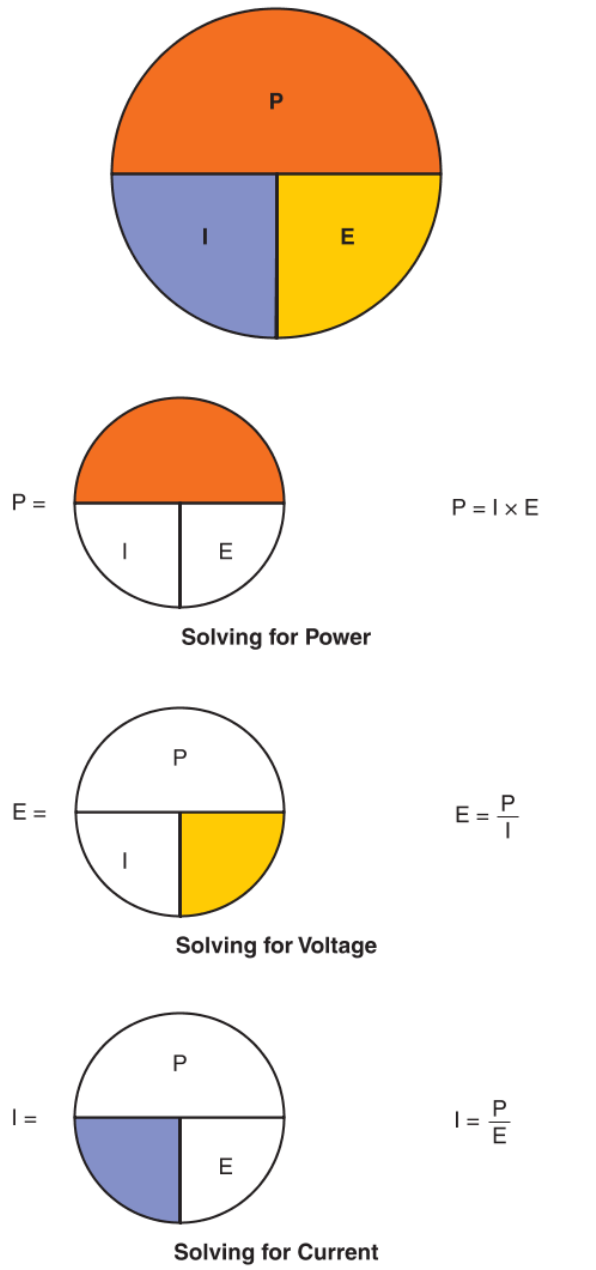

Goodheart-Willcox Publisher

Figure 13-1. Similar to Ohm's law, Watt's law provides a formula that can be used to solve for three variables.

13.1.1 Root Mean Square Values

Alternating current fluctuates from positive to negative values within a cycle, which means the values for voltage and current are always changing. This poses a problem when trying to calculate the power used by an ac circuit because there is no constant value for voltage or current. ***Root mean square (rms)*** values are used to equate the heat produced by alternating current to direct current values that would produce the same amount of heat. Thus, the root mean square voltage for an alternating current equals the voltage of a direct current that would produce the same amount of heat, **Figure 13-2**.

Most voltmeters and ammeters measure the voltage and current of an ac circuit in root mean square values, so a technician does not always have to calculate them. The root mean square voltage of an alternating current is also called effective voltage or rms voltage (V_{rms}). To calculate the rms voltage of an alternating current, multiply the maximum voltage value (V_{max}) in the alternating current's cycle by 0.707.

$$V_{rms} = V_{max} \times 0.707$$

Example:

What is the effective voltage (rms voltage) of an ac power source with a maximum voltage of 170 V?

Copyright Goodheart-Willcox Co., Inc.

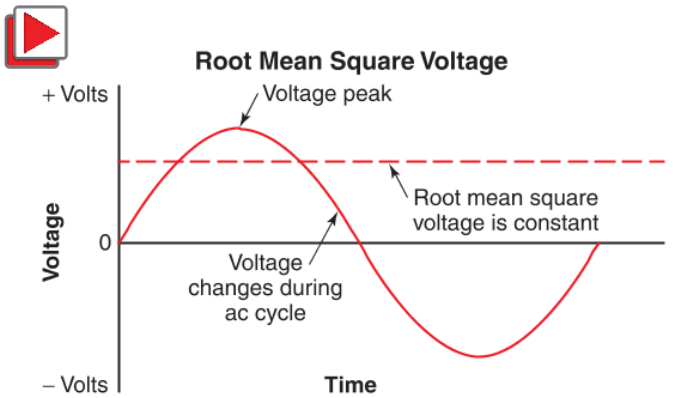

Goodheart-Willcox Publisher

Figure 13-2. An alternating current produces voltage that rises and falls. Root mean square voltage equates the fluctuating voltage value to a direct current value that would produce the same heating effect.

$$V_{rms} = V_{max} \times 0.707$$
$$V_{rms} = 170\ \text{V} \times 0.707$$
$$V_{rms} = 120.19\ \text{V}$$

The effective current, or rms current (I_{rms}), of an ac power source is calculated the same as rms voltage. The maximum current value (I_{max}) in the alternating current's cycle is multiplied by 0.707.

$$I_{rms} = I_{max} \times 0.707$$

Example:

If the maximum current of an ac power source peaks at 5 A, what is the effective current (rms current)?

$$I_{rms} = I_{max} \times 0.707$$
$$I_{rms} = 5\ \text{A} \times 0.707$$
$$I_{rms} = 3.535\ \text{A}$$

13.1.2 Power Loss

Power loss is the difference between power output and power input. In some cases, the cause of power loss is electrical resistance. Electrical resistance is comparable to mechanical resistance, much like brakes on an automobile. As an automobile's mechanical brakes use friction to slow or stop a wheel's motion, electrical resistance slows or stops the flow of current. As the current pushes through the resistance, heat produced from the resistance is released, indicating a power loss. Extra unintentional resistance may result from a bad connection, improperly sized conductors, or other conditions.

A circuit that provides only resistance is called a resistive circuit. Since resistance limits or resists the flow of current, it creates a voltage drop, but it leaves both voltage and current in phase. Voltage and current are in phase when they both reach their positive and negative peaks at the same time. This in phase condition only occurs in a resistive circuit, **Figure 13-3**.

Power loss for a purely resistive circuit can be calculated using the following formula:

$$P = I^2 \times R$$

P = power loss (watts)
I = current (amperes)
R = resistance (ohms)

Example:

What is the power loss through a circuit that has a 5 A current and a 24 Ω resistance?

Solution:

$$P = I^2 \times R$$
$$P = 5^2 \times 24$$
$$P = 25 \times 24$$
$$P = 600\ \text{W power loss}$$

This formula can also be used to calculate the power loss through individual components in a circuit. To find a circuit's total power loss using this method, all the wattages of each component are added to get the total power loss of the circuit.

Note that this formula ($P = I^2 \times R$) is equivalent to the Watt's law formula. This is because ($I^2 \times R$) can be reinterpreted as $E \times I$. Remember that $I \times R = E$ and $I \times E = P$. Therefore, $I^2 \times R = I \times E$.

Inductive Reactance

Power loss can also occur due to inductance. ***Inductance*** is an electrical property that opposes a change in current. Therefore, in an ac circuit where current is changing constantly, inductance's opposition to current change creates a noticeable power loss. The opposition

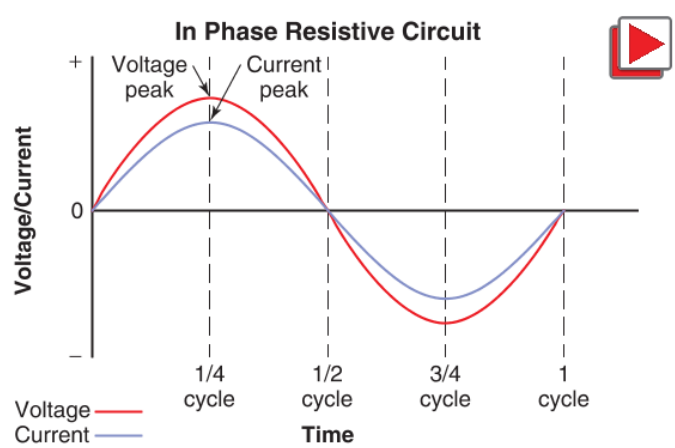

Goodheart-Willcox Publisher

Figure 13-3. In a purely resistive circuit, voltage and current are in phase.

Copyright Goodheart-Willcox Co., Inc.

of inductance to current change causes voltage and current to alternate out of phase. The alternating current lags behind the alternating voltage. This opposition to alternating current that causes current to lag behind voltage is called ***inductive reactance***, **Figure 13-4**.

Like resistance, inductive reactance causes power loss and is measured in ohms (Ω). Examples of inductive components include motors, relays, transformers, and speakers. Inductors are generally devices with coils of wire.

Capacitive Reactance

Capacitance is the ability to store an electrical charge in an electrostatic field. See Chapter 12, *Basic Electricity*. When ac voltage is applied to a capacitor, the plates of the capacitor charge and discharge repeatedly. As the voltage builds on one plate of the capacitor, electrons discharge from (current flows from) the other plate of the capacitor. As a result, a phase shift occurs in which alternating voltage lags behind alternating current. This opposition to alternating current that causes voltage to lag behind current is called ***capacitive reactance***, **Figure 13-5**.

Like inductive reactance and resistance, capacitive reactance produces resistance to the flow of alternating current and is measured in ohms (Ω). Capacitive reactance also causes power loss in circuits. Most capacitive components are capacitors.

13.1.3 Power Factor

As discussed earlier in this chapter, power can be calculated with the following formula: $P = I \times E$. This calculated value is called ***apparent power***, as it does not take into account the effects of inductive reactance

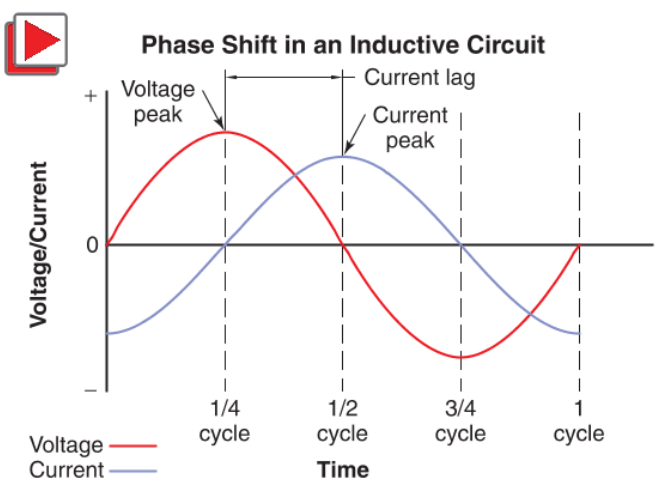

Goodheart-Willcox Publisher

Figure 13-4. In an inductive circuit, voltage and current are out of phase. Current lags behind voltage because inductance resists a change in current.

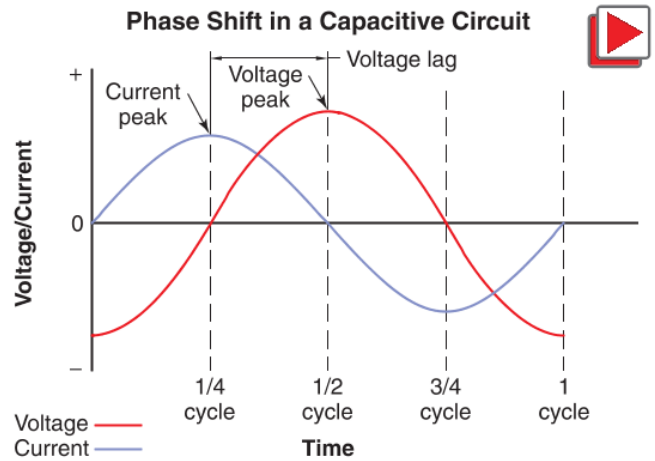

Goodheart-Willcox Publisher

Figure 13-5. In a capacitive circuit, voltage and current are out of phase. Voltage lags behind current because as voltage builds on one plate of a capacitor, current is peaking and being discharged from the other plate of the capacitor.

or capacitive reactance. The value of apparent power is always calculated in ***volt-amperes (VA)***. To find the actual power used by a circuit, which is called the circuit's ***true power***, take a reading with a wattmeter. A ***wattmeter*** is an instrument that measures a circuit's true power, and true power is always measured in watts.

The apparent power of a circuit can equal its true power, but this only occurs if the circuit is purely resistive. In other words, apparent power equals true power when the circuit only has resistive components and does *not* have inductive components (motors, relays, etc.) or capacitive components (capacitors). Without the influence of these two electrical properties, the voltage and current will alternate in phase and apparent power will equal true power. However, when inductive or capacitive components are in a circuit, two results will occur:

- Voltage and current will alternate out of phase.
- Apparent power and true power will differ.

A circuit's ***power factor*** shows the relationship between a circuit's true power and apparent power. Power factor is the ratio of true power (a wattmeter reading) to apparent power (calculated power in volt-amperes) and is given as a percentage.

$$\text{Power factor} = \left(\frac{\text{True power}}{\text{Apparent power}}\right) \times 100$$

Example:

Connected to an ac circuit, a voltmeter reads 120 V, and an ammeter reads 10 A. Using the formula for power, we can calculate the apparent power:

Copyright Goodheart-Willcox Co., Inc.

$$P = I \times E$$
$$P = 120\ \text{V} \times 10\ \text{A}$$
$$P = 1200\ \text{VA}$$

Connecting a wattmeter to the circuit measures its true power value. It reads 1000 W. To calculate the circuit's power factor, divide the true power by the apparent power, and multiply the result by 100.

$$\text{Power factor} = \left(\frac{\text{True power}}{\text{Apparent power}}\right) \times 100$$
$$\text{Power factor} = \left(\frac{1000\ \text{W}}{1200\ \text{VA}}\right) \times 100$$
$$\text{Power factor} = 0.83 \times 100$$
$$\text{Power factor} = 83\%$$

Because the true power and apparent power are *not* equal, the power factor of this circuit is below 100%. This means the circuit must have an inductive or capacitive component that is resisting the change in current.

Thinking Green

Improving Power Factor

To improve the power factor of inductive circuits, add capacitors to the circuit. In this way, the capacitive reactance of the capacitors will counteract the inductive reactance of the inductors. Based on the apparent power calculation, a technician can install a capacitor and compare the true power readings of a wattmeter with the apparent power to improve a circuit's power factor. The ideal power factor should be as close as possible to 100%. This will result in the most efficient and economical use of energy.

13.2 Power Circuits

Electrical loads and their circuits must be compatible with the power provided by an electric utility company. Compatibility variables include voltage level, current capacity, frequency (in Hertz), and voltage phase. Wires must be large enough to carry the full or maximum current that electrical loads will use. Electrical loads must be designed to operate using a circuit's frequency, which is 50 Hz or 60 Hz, depending on location. The most commonly used voltage phases are single-phase and three-phase. **Figure 13-6** shows some of the common voltage, frequency, and voltage phase options that electric utility companies supply.

Caution

AC/DC

Never connect alternating current appliances or instruments into direct current circuits. Never connect direct current appliances or instruments into alternating current circuits.

Pro Tip

Electrical Equipment Variables

Check with the electric utility company before installing equipment of any sizable horsepower. Remember that most of North America distributes electricity at 60 Hz, but many other countries distribute electricity at 50 Hz.

13.2.1 Single-Phase and Three-Phase Power

The two most common voltage phase options used in HVACR are single-phase and three-phase:

- 240 V single-phase power is usually supplied to residential homes.
- 480 V three-phase power is usually supplied to commercial buildings.

A ***single-phase*** voltage cycle has a single alternating current. The voltage starts at zero, rises to a positive maximum, falls to a negative maximum, and rises to zero again as the cycle repeats. There is no power produced during the instant that the voltage is zero. Most power circuits in a residence operate on 120 V single-phase power, **Figure 13-7**.

More than one alternating current may be used in a single circuit. However, each alternating current is out of phase with the other alternating currents. Such an arrangement is called polyphase. The most widely used polyphase option is ***three-phase*** voltage, which has three separate voltage signals alternating in three separate phases, **Figure 13-8**.

The separate voltage signals in a three-phase cycle are delayed so that they peak at different times.

Residential and Commercial Electrical Service Options

Voltage	Frequency	Phase
115	60	Single
120	60	Single
208	60	Single
230	60	Single
230	60	Three
240	60	Single
240	60	Three
480	60	Three

Goodheart-Willcox Publisher

Figure 13-6. This chart shows typical residential and commercial voltages, frequencies, and phases.

Copyright Goodheart-Willcox Co., Inc.

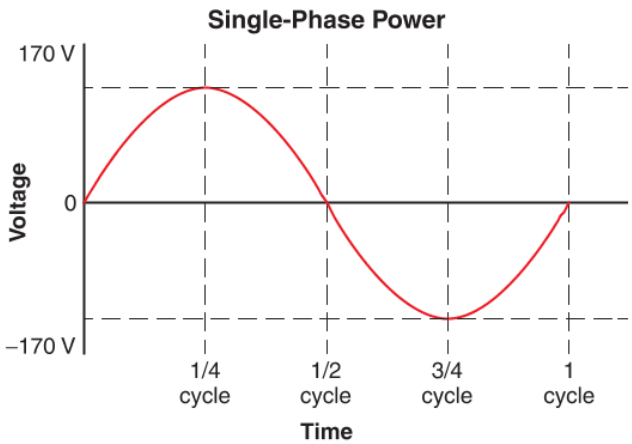

Goodheart-Willcox Publisher

Figure 13-7. This graph represents one complete cycle of alternating current in a typical 120 V residential circuit. Note that for a 120 V circuit, the maximum voltage value is 170 V. By multiplying 170 V by 0.707, you can confirm that 120 V is the root mean square voltage of the circuit.

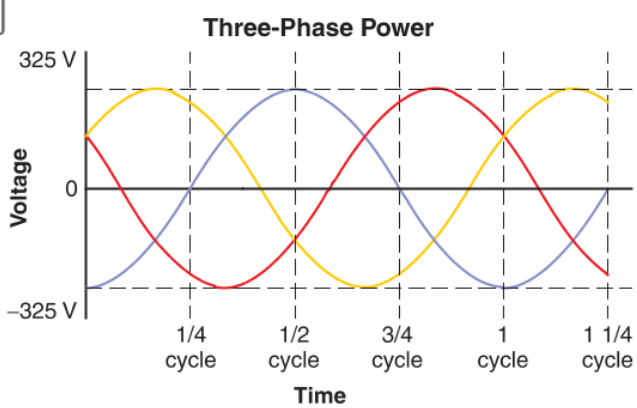

Goodheart-Willcox Publisher

Figure 13-8. The separate alternating currents in a three-phase voltage cycle are set off from each other by one-third of a cycle. The separation of each voltage peak provides a more stable flow of electricity without the wide variation in voltage of a single-phase circuit.

This delay creates the effect of giving constant power because there is never an instant where all the voltages are zero. Three-phase power is often used by commercial businesses that have a higher-voltage, three-phase transformer. The advantage of using the higher-voltage, three-phase power source is that there is less power loss at the transformer.

13.2.2 Electrical Codes

The National Electrical Code (NEC) establishes rules and regulations covering materials and methods used in installing electrical systems. In addition, many cities and communities have supplementary local codes. All electrical installations must be made in conformity with national and local codes.

For HVACR systems, most electrical circuits fall under the NEC definition of a Class 2 circuit. ***Class 2 circuits*** are defined as circuits supplied by a power source that has an output no greater than 30 V and 1000 VA. In addition, a Class 2 circuit is defined as the portion of a wiring system between the power source and the connected equipment. Examples of Class 2 circuits include remote-control circuits with a relay or any other device that controls another circuit, such as a circuit for a thermostat. Class 2 circuits also include signal circuits, examples of which include circuits for a warning buzzer or signal light.

HVACR service technicians are permitted to make Class 2 connections and installations. Examples include connecting electrical devices used to control furnaces or installing heat pumps and other HVACR equipment in residences. In addition, service technicians are allowed to install and service low-voltage components and wiring within HVACR equipment. Any component that is integral to the proper operation of HVACR equipment counts as being "within" the equipment, even if it is not physically inside it.

Code Alert

Wiring Power Circuits

Because Class 2 circuits only encompass the portion of a circuit between the power source and connected equipment, HVACR technicians cannot install branch circuits, power supply circuits, or service conductors that supply a piece of HVACR equipment with power. See NEC article 725 for more information on Class 2 circuits.

13.2.3 Wire Sizes

The current-carrying capacity of a conductor (wire) depends on its diameter and material. Larger wires can carry a higher current than smaller wires, and copper can carry higher current than aluminum. The following information is based on copper conductors, as copper is the most widely used electrical conductor.

Wire size is specified by the ***American Wire Gage (AWG)***. AWG is the designation most commonly used on wires. The smallest commonly used wire size in HVACR is 18 AWG. As the wire diameter *increases*, the AWG number *decreases*. In addition, the resistance of the wire also decreases as diameter measurements increase, **Figure 13-9**.

Copyright Goodheart-Willcox Co., Inc.

Conductor Sizes and Resistance Properties		
Size (AWG)	Diameter	Direct Current Resistance at 75°C (167°F) [Ω/1,000 feet]
18	0.040″	8.08 Ω
16	0.051″	5.08 Ω
14	0.064″	3.19 Ω
12	0.081″	2.01 Ω
10	0.102″	1.26 Ω
8	0.128″	0.786 Ω
6	0.184″	0.510 Ω
4	0.232″	0.321 Ω
3	0.260″	0.254 Ω
2	0.292″	0.201 Ω
1	0.332″	0.160 Ω
1/0	0.372″	0.127 Ω
2/0	0.418″	0.101 Ω
3/0	0.470″	0.0797 Ω
4/0	0.528″	0.0626 Ω

Goodheart-Willcox Publisher

Figure 13-9. This chart shows AWG wire sizes and their corresponding diameters in inches. Notice that as the values for diameter increase, the resistance in ohms decreases.

Wires larger than 1 AWG have a slash zero (/0) added to the number. For example, the wire sizes larger than 1 AWG are 1/0 AWG (pronounced *one aught*), 2/0 AWG, 3/0 AWG, and 4/0 AWG. Unlike standard gage sizes, the numbers for aught sizes increase as the wire size increases.

Pro Tip

Gage or Aught

If your supervisor tells you to bring a roll of four to the site, would you know which size to bring? Electricians will typically say "gage" or "aught" after the number when specifying wire size. A 4 AWG (four gage) wire can handle about 85 amps and is used for feeders to heavy-duty equipment. A 4/0 AWG (four aught) wire can handle 230 amps and is used for service to an entire building. If you are not sure, always ask.

The electrical wire that is run to outlet receptacles must be adequately sized. For example, 15- and 20-ampere outlets should be supplied with 12 AWG wire, and 10 AWG wire should be used for 30-amp outlets. For 40-amp outlets, use 8 AWG stranded wire. These examples are just guidelines. There may be situations where correction factors will require a larger wire. Always consult with an experienced electrician when installing wire.

13.2.4 Connectors and Terminals

For easy troubleshooting, repair, and disassembly, many wires and cables in an HVACR system are connected at terminals with a variety of connectors, instead of soldering. Wrapping stranded wires around a terminal screw does not make a good or permanent connection. Strands of wire may work loose and cause a ground fault or short circuit. Before a wire is attached to a connector, one end of the wire must be stripped.

Wiring stripping is generally done with an electrical tool called a wire stripper. These are available in different makes and models for different types of wire and different wire sizes, **Figure 13-10**.

Caution

Wire Stripper Use

When stripping wires, be sure to use the proper setting. A setting too large will cause difficulty in removing the insulation. A setting too small could nick the wire or even cut some of strands off a stranded wire. This could reduce the ampacity of the wire and may result in overheating or other damage.

Many types of connectors have been developed to make good electrical connections. For example, wire

hilmor

Figure 13-10. Various wire strippers. Often these can also function as wire crimpers and cutters.

Copyright Goodheart-Willcox Co., Inc.

terminals help service technicians remove and replace wire leads quickly, **Figure 13-11**.

Crimping Wires to Wire Terminals

Make sure to clean the terminal with clean steel wool before connecting wires using the following procedure:

1. Strip wire to length of terminal. Make sure wire strands are still wrapped tightly.
2. Insert stripped wire into the terminal end, called the barrel, at the manufacturer's prescribed length.
3. Open the crimping tool and place it around the barrel.
4. Squeeze down on the handle of the crimping tool until it bottoms out.
5. Check crimp for tightness.

13.2.5 Receptacle and Plug Configurations

It is sometimes necessary to connect electrical devices using flexible cords and plugs. Most electrical devices are designed for a particular power supply specification.

Code Alert

Accessible Electrical Outlet

Section 210.63 of the National Electrical Code requires at least one 125-volt, 15- or 20-ampere-rated receptacle outlet to be installed in an accessible location for use when servicing HVACR equipment. This requirement ensures that an electrical outlet is conveniently located for connecting various pieces of equipment during service.

Connections to a power supply must match the electrical specifications of the equipment. For instance, an appliance designed for 120 V cannot be connected into a 240 V circuit. The appliance will very quickly burn out. Likewise, an appliance with protection up to 15 A cannot be connected into a circuit of 30 A capacity. The appliance could burn out, or an overcurrent protection device, such as a circuit breaker, could be damaged.

The National Electrical Manufacturers Association (NEMA) has developed standardized receptacle and plug configurations. **Figure 13-12** shows receptacle and plug configurations commonly used with HVACR equipment.

13.2.6 Circuit Protection

Electric current flowing through a circuit produces heat and a magnetic field. A surge of current causes the circuit to produce more heat and electromagnetic interference than it produces normally. Appliances can be damaged or ruined by the heat, and instruments can be damaged by the electromagnetic interference. Overcurrent protection devices are used to prevent the problems caused by an accidental current surge. Two of the most common overcurrent protection devices are circuit breakers and fuses.

Circuit Breakers

One of the most common protective devices is a ***circuit breaker***, **Figure 13-13**. Current flowing through a protected circuit passes through a solenoid in the circuit breaker. If the current in the circuit exceeds a predetermined level, the increased magnetic effect of the current surge causes a spring-loaded switch to open the circuit. When the current exceeds the set limit, the circuit is broken. A circuit breaker can be reset after it has been tripped.

Fuses

Another protective device is a fuse. A ***fuse*** contains a metal conductor in series with the circuit. The metal conductor inside the fuse is specifically engineered to allow current up to a certain level to pass. If

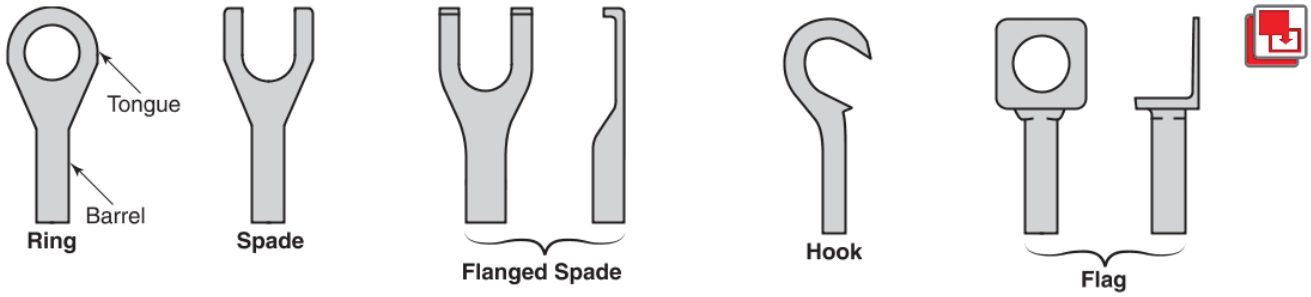

Goodheart-Willcox Publisher

Figure 13-11. Some common types of wire terminals used to connect electrical wires to terminal posts.

Copyright Goodheart-Willcox Co., Inc.

Receptacle and Plug Configurations					
Conductor Type	Volts	15 Ampere		20 Ampere	
		Receptacle	Plug	Receptacle	Plug
2 pole / 3 wire / grounding type	125 V				
	250 V				
	277 V				
3 pole / 3 wire / 3 phase	250 V				
3 pole / 4 wire / 3 phase / grounding type	250 V				
4 pole / 4 wire / 3 phase	120/208 V				

Goodheart-Willcox Publisher

Figure 13-12. NEMA-approved receptacle and plug configurations help to prevent technicians from placing the wrong-sized plug into an outlet.

Goodheart-Willcox Publisher

Figure 13-13. A circuit breaker is designed to open (break) a circuit if the current passing through the circuit breaker exceeds the set limit.

current exceeds that level, it will heat the fuse enough to melt. This will cause the circuit to open, stopping the current and protecting the circuit. Fuses are typically available in either a plug or cartridge arrangement. Fuses used in HVACR circuits are usually designed to carry 5, 10, 15, 20, or 30 A, **Figure 13-14**.

Code Alert

Electrical Disconnect Box

Section 440.14 of the NEC requires that a disconnecting means be readily accessible and within sight of HVACR equipment. The disconnecting means cannot be more than 50′ away from the unit. Access to the disconnecting means cannot require ladder use, tools, or moving obstacles in the way.

Most residential air conditioning units have an outdoor electrical disconnect box nearby. The outdoor box includes a disconnect and may include fuses to protect the condensing unit, as shown in **Figure 13-15**. Disconnect boxes often include replaceable 30 A to 60 A fuses.

Copyright Goodheart-Willcox Co., Inc.

Goodheart-Willcox Publisher

Figure 13-14. Some standard types of fuses. Unlike circuit breakers, fuses can be used only once. If the conductor in a fuse melts, it must be replaced by a new fuse.

Thermistor

Another type of protection device is a thermistor. A thermistor regulates the flow of current by changing its resistance based on heat. In some cases, a thermistor may cause the current flow to be reduced to a safe value. More information about thermistors will be presented in Chapter 14, *Basic Electronics*.

Thermistors are primarily used in low-voltage electronic applications. Their ability to function as a temperature sensing probe helps to prevent a motor or circuit from overheating, making them useful circuit protection devices.

Ground Fault Circuit Interrupter

Another form of circuit protection is the ***ground fault circuit interrupter (GFCI)***. This device detects current imbalances between the ungrounded (hot) and grounded (neutral) conductors of a circuit and opens the circuit, preventing or minimizing harm to both the equipment and the technician. A ground fault circuit interrupter opens when the equipment connected to it is defective, misused, or improperly grounded. A ground fault circuit interrupter opens when as little as 6 milliamperes (0.006 amperes, 6 mA) of current leaks out of the circuit and into the grounding system. Like a circuit breaker, a GFCI can be reset rather than replaced. **Figure 13-16** shows a ground fault circuit interrupter receptacle.

DiversiTech Corporation

Figure 13-15. A—This disconnect box is installed and operating properly, as indicated by its operation light. B—Disconnect boxes are built to allow a technician to easily remove the disconnect. Not all include fuses.

Copyright Goodheart-Willcox Co., Inc.

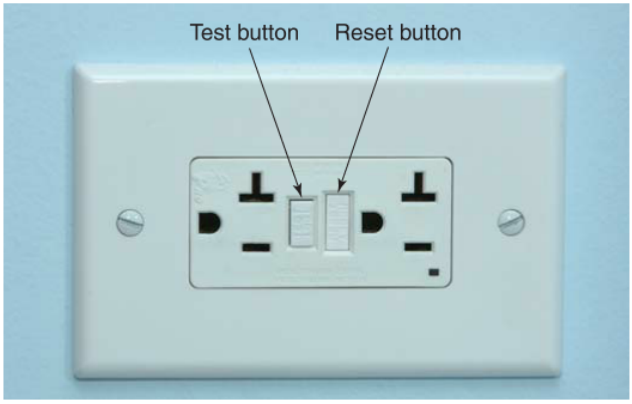

Goodheart-Willcox Publisher

Figure 13-16. The NEC requires that ground fault circuit interrupter receptacles, such as the one shown here, be used in bathrooms, kitchens, and other places where moisture may be present.

Code Alert

GFCI Receptacles

Section 210.8 of the NEC states that a GFCI is required for outdoor outlets, garages, swimming pools, certain indoor applications where water is present, and other locations. GFCI receptacles are required by code for kitchen and bath applications where water splashing may occur. Always refer to local codes and the National Electrical Code when determining if a circuit should be protected by a GFCI.

13.2.7 Grounding and Bonding

An electrical system that is grounded has a proper connection to the earth. Most soil (ground) is a fairly good conductor of electricity. Moist ground is a better conductor than dry ground. There are many ways to connect an electrical system to the earth (grounding rods, plates, copper water pipes), all of which should be installed by a trained electrician and inspected by the local authority having jurisdiction.

Pro Tip

Grounding Terminology

There are terms, such as *hot*, *neutral*, and *ground*, that are often improperly used to describe the types of conductors in an electrical system. The following should help you understand the proper terminology as it is described in the National Electrical Code.

Ground is the earth to which an electrical system connects. When a technician says, "This box is a good ground," the implication is that the box has an unswitched, continuous electrical connection to the earth.

Grounding refers to the act of connecting something to the earth or the equipment that connects something to earth. A metal rod driven into the earth is a grounding electrode. The conductor that connects the electrical system to that rod is a grounding electrode conductor.

Grounded conductors are connected to a grounded transformer. These wires are often called the *neutral* wires. These wires are most often white, though they can be grey or be a color that is *not* green and having three continuous white or grey stripes along its length.

Ungrounded conductors are connected to the phase lines of a transformer. These wires are often called the *hot* wires. These wires typically have black insulation, but they can be any color except green, green with stripes, gray, or white.

Electrical components must be grounded. These include compressors, condensers, evaporator fan motors, defrost timers, temperature controls, and ice makers. They are grounded by connecting an individual wire from the electrical component to a grounded part of the appliance. Ground wires should not be removed from individual components while servicing. The exception to this rule is if the component is to be removed and replaced.

5

Safety Note

Grounding Components

Some service procedures may require removing a component's ground wire temporarily. It is extremely important that the service technician replace any and all ground wires prior to completing the service call. Under no conditions should a ground wire be left off. It is a potential hazard to the service technician and the customer.

In addition to grounding all electrical components, a technician must also create a continuous electrical connection of all the metal parts in an electrical system. This is called ***bonding***. Bonding involves joining all metallic components of an electrical system, even those that do not normally carry current, such as metallic boxes and conduit. Bonding creates a good metallic connection throughout an electrical system, which diverts current from a fault (such as an ungrounded conductor contacting metallic conduit) through the metallic connections and back to the earth. This prevents and protects people from electric shock in the case of a fault. **Figure 13-17** illustrates the proper method of bonding a receptacle to an electrical box.

Safety Note

Grounding Prong

Under no conditions is the grounding prong to be cut off or removed from an electrical cord. Sometimes a grounded appliance must be installed where there is no grounded, three-prong wall receptacle. The customer is responsible for contacting a qualified electrician to install a grounded, three-prong wall receptacle in accordance with the appropriate electrical code. A temporary accommodation can be made by using a grounding adapter.

Copyright Goodheart-Willcox Co., Inc.

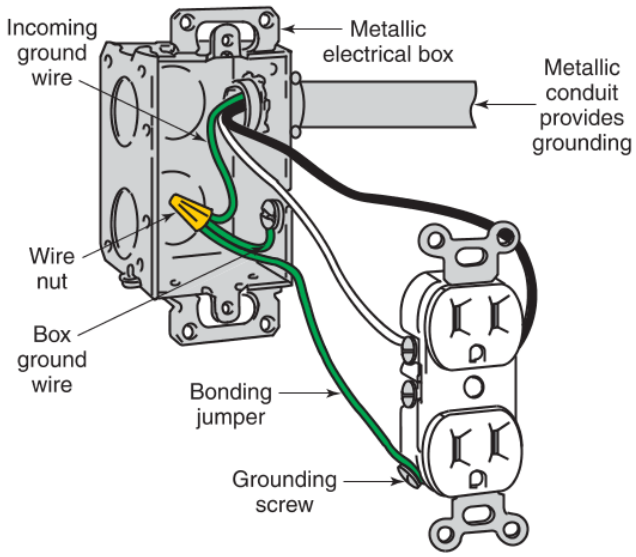

Goodheart-Willcox Publisher

Figure 13-17. The receptacle is connected to the incoming ground wire, the metallic electrical box, and the metallic conduit. By properly bonding and grounding an electrical system, a technician prevents the possibility of electric shock.

In all HVACR electrical circuits, the ground wire is green. This wire is never used as a current-carrying conductor. Its main purpose is to provide protection in the event of an accidental ground. To avoid any possibility of electric shock, all HVACR systems must always be properly grounded. **Figure 13-18** shows a typical ground connection for a residential air handler cabinet.

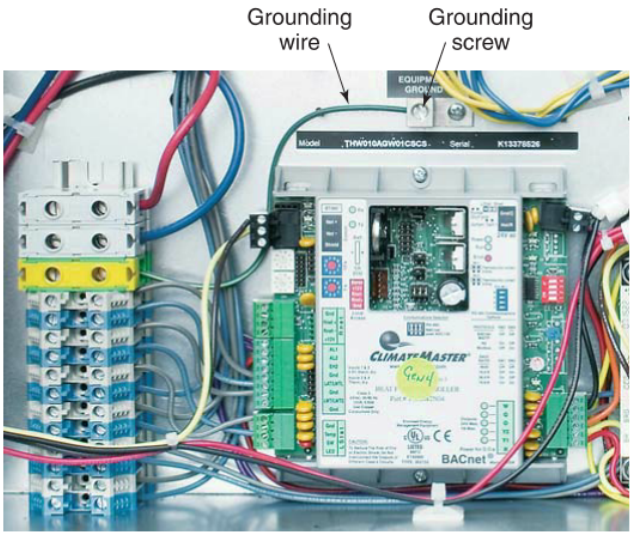

ClimateMaster

Figure 13-18. The green ground wire is attached to a grounding screw, which is connected to a metal surface that is bonding the entire metal case. Another larger wire connected to the metal case will act as the whole unit's equipment grounding conductor.

13.3 Electrical Problems

There are times when electrical components do not work as expected. The majority of problems can be narrowed down to the following common problems: a short circuit, ground fault (a short to ground), an overload, an unintentional voltage drop, or an open circuit.

13.3.1 Short Circuit

A ***short circuit*** occurs when current is unintentionally routed around a component or electrical load, instead of through it. This can happen because electrons always follow the path of least resistance. In a short circuit, electrons take a shortcut back to their source, causing the load to stop working, **Figure 13-19**.

In a short circuit, the low resistance causes the current to be extremely high. This high current may cause the wires to overheat and will likely cause the overcurrent protection to react, such as a circuit breaker tripping or a fuse blowing. A common example of a short circuit is when noninsulated parts of conductors come into contact with each other. When two conductors come into contact with each other, most of the current will go through the conductors and bypass the electrical load.

13.3.2 Ground Fault

A ***ground fault*** is a condition in which a device or ungrounded metal part becomes electrically hot or live. This is like a short circuit to ground that is waiting to happen. This can occur when an unknowing person touches the electrically live part and something that is grounded. This normally results in a dangerous electrical shock.

Caution

Ground Fault Shocks

For any service call, take note of the age of the building and the age of the HVACR system. If it appears to be built before 1970, the electrical wiring may be constructed in a way that is prone to ground faults. In such cases, exercise extreme caution. Do not touch your hands to two different parts of a system (such as a furnace casing and ductwork) without first using a voltmeter to see if one is electrically live. If any such measurements show voltage, lock out and tagout the power until finding the root cause. Note that this may involve rewiring that some localities require to be done by a licensed electrician.

Copyright Goodheart-Willcox Co., Inc.

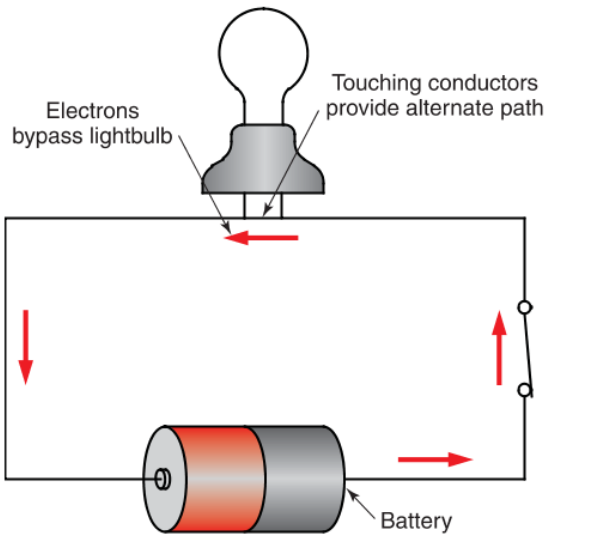

Goodheart-Willcox Publisher

Figure 13-19. The touching conductors are shorting out the lightbulb by redirecting electric current around it.

A ground fault provides electrons with an alternate path with less resistance. A ground fault poses a serious hazard if all the metallic objects in an electrical system are not joined through bonding. For example, if a current-carrying conductor contacts an electrical box that is *not* properly bonded to other metal equipment, then that box could become electrically energized. Any person that touches the box could become the conductor to ground. A circuit equipped with a GFCI helps to prevent this potential hazard. The GFCI will detect that there is a loss of current to the ground and open the circuit to prevent a dangerous shock hazard.

13.3.3 Overload

An ***overload*** is a condition in which too much current flows through a circuit. This condition often leads to excess heat generation and can result in fire or deterioration of electrical insulation. Overloads result from an incorrect power supply, equipment failure, too many loads connected in parallel, or electromechanical equipment operating under strained conditions.

A common example of too many parallel loads occurs when too many appliances or electrical devices are plugged into a single outlet using an outlet adapter. With all of these appliances trying to draw current from a single circuit, the total amperage required may exceed the circuit's capability. Overcurrent protection devices, such as circuit breakers and fuses, are designed to open a circuit when the current in the circuit exceeds a certain amperage. This prevents the risk of excessive heat generation or insulation deterioration.

Pro Tip

Overload vs. Short Circuit

There is a difference between overloads and short circuits. Both are overcurrent events. A short circuit occurs when current goes around an electrical load, resulting in extremely high current. No resistance makes for extremely high current. A short circuit will cause an immediate tripping of a circuit breaker or blowing of a fuse.

An overload occurs when current is still following its proper path, but too much current is flowing due to some cause. An overload's higher than normal current draw may not cause overcurrent protection to react as quickly or at all, depending on the level of overcurrent.

5

13.3.4 Unintentional Voltage Drop

An ***unintentional voltage drop*** is a condition in which the applied voltage from a power source is unintentionally reduced in a circuit. This may be down to a level that is too low for safe use on the electrical load in the circuit. This condition may be caused by factors such as the length of wires, wire gage size, wire material, temperature, impedance from magnetic fields, or poor electrical connections. All of these variables can add resistance, creating a small electrical load across which some of the applied voltage is dropped. Depending on where a voltage drop occurs, it may make less voltage available for certain electrical loads.

When installing HVACR equipment, follow the equipment manufacturer's guidelines and applicable electrical codes for recommended wire length and diameter. If the equipment must be located far from the voltage source, the wire diameter may be increased to prevent line losses and supply proper voltage to the unit.

Poor connections and excessively long wire lengths are common causes of unintentional voltage drops. When installing wiring, use the following formula to calculate a conductor's voltage drop (V_D) and avoid such problems. For a single-phase, two- or three-wire system, use this formula:

$$V_D = \frac{(2 \times L \times R \times I)}{1000}$$

V_D = voltage drop
L = length of the conductor in feet
R = resistance of the conductor (values found in a table or chart)
I = current of the circuit in amps

For example, if 120 V is applied to a 50′ run of 10 AWG wire carrying 30 A, what is the voltage drop? Already knowing the length and current of the wire, a technician need only refer to an NEC table listing conductor properties to find the resistance of the conductor.

Copyright Goodheart-Willcox Co., Inc.

In this case, **Figure 13-9** lists the resistance of 10 AWG wire as 1.26 Ω. Therefore, the values for each variable can be plugged in as follows:

$$V_D = \frac{(2 \times L \times R \times I)}{1000}$$

$$V_D = \frac{(2 \times 50' \times 1.26\ \Omega \times 30\ \text{A})}{1000}$$

$$V_D = \frac{3780}{1000}$$

$$V_D = 3.78\ \text{V}$$

If the applied voltage is 120 V, and 3.78 V are dropped, then the voltage that reaches the load at the end of the 50′ conductor will be 116.22 V. A motor designed to operate at 120 V may lose speed if there is a large amount of voltage drop in the circuit. The rotor (wire loop) will start slipping relative to the magnetic field in the stator (stationary windings). The rotor will slow down below its synchronous speed, causing the magnetic fields to grow large at the wrong time. The motor will heat up, and it may even burn up.

Most HVACR equipment is designed to operate in a range of ±10% of its rated voltage. Continuous operation outside the 10% range may harm the equipment. It is always a good practice to check voltage levels at the power source (circuit breaker box) and at the unit to determine how much voltage loss has occurred.

Pro Tip

Voltage Drop

It is important to calculate voltage drop, especially with motors. Compare each motor's rated voltage on its nameplate against a voltage reading on the motor's terminals. A 120 V motor should be able to operate at a voltage level from 108 V to 132 V.

13.3.5 Open Circuit

An open circuit means there is a break in the current's path, stopping the flow of current through the circuit. An open circuit can result from a poorly wired electrical connection, a broken wire, an open fuse or circuit breaker, or a burned-out component, such as a motor, **Figure 13-20**.

When checking a component as the cause of an open circuit, take a voltage reading across the component's terminals. With power applied to the circuit, the voltage measurement will read the applied voltage value of the circuit. A measurement with a clamp-on ammeter or ammeter will show no current because an open circuit will not allow current to flow.

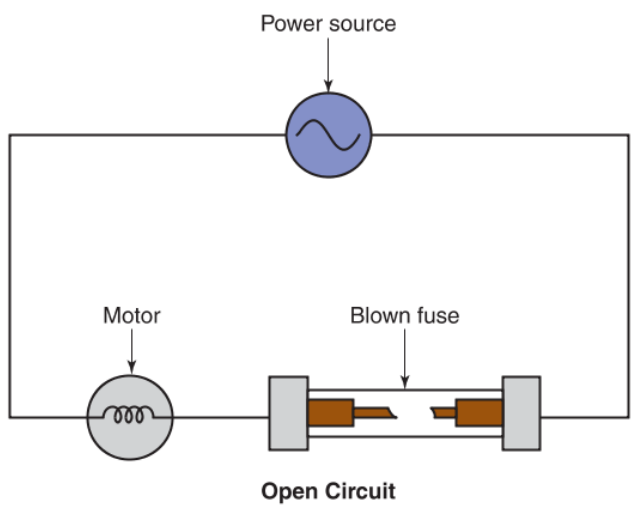

Goodheart-Willcox Publisher

Figure 13-20. The motor is not running because the blown fuse has caused an open circuit.

Copyright Goodheart-Willcox Co., Inc.

Chapter Review

Summary

- A circuit's electrical power is a product of current multiplied by voltage. Watt's law is much like Ohm's law and can be arranged to solve for any of the three variables. Power is measured in watts (W), kilowatts (kW), and megawatts (MW).
- The voltage, current, and power of an alternating current are constantly changing within a cycle. Root mean square (rms) values are used to calculate the equivalent dc values of an ac sine wave. This provides constant values for voltage and current that can be used to calculate the power used by an ac circuit.
- Resistance, inductive reactance, and capacitive reactance all cause a loss of power. Both inductive reactance and capacitive reactance cause voltage and current to cycle out of phase with each other.
- The apparent power of a circuit equals its true power only if the circuit is purely resistive. The phase shift caused by inductive reactance or capacitive reactance affects a circuit's true power. Power factor is a ratio that shows the relationship between true power and apparent power expressed as a percentage.
- Electrical loads need to be compatible with the power supplied by the electric utility company. Important variables to match include voltage level, current capacity, frequency, and voltage phase.
- For HVACR purposes, most power is either single-phase or three-phase. Single-phase voltage has a single, alternating electrical signal. Three-phase voltage has three voltage signals alternating in three different phases.
- The National Electrical Code (NEC) establishes regulations and guidelines for materials and methods used in electrical installation. Most HVACR electrical work involves wiring Class 2 circuits. Wire size is designated by the American Wire Gage (AWG).
- The main types of overcurrent protection devices are the circuit breaker, fuse, thermistor, and ground fault circuit interrupter (GFCI). Circuit breakers and fuses are current-sensing devices that open a circuit if the current exceeds a predetermined level. A ground fault circuit interrupter (GFCI) opens a circuit if it detects an imbalance between a circuit's ungrounded (hot) and grounded (neutral) lines.
- Grounding and bonding all electrical and metallic components help to prevent electric shock. Bonding creates a good metallic connection throughout an electrical system, which diverts current, in the case of a fault, through the metallic connections and back to the earth.
- Electrical problems in circuits are commonly the result of one of the following five problems: a short circuit, a ground fault (short to ground), an overload, an unintentional voltage drop, or an open circuit. By calculating a conductor's voltage drop, a technician can determine if a certain size conductor will deliver the proper voltage to a load. If voltage drop is too great, it can damage the load.

Review Questions

Answer the following questions using the information in this chapter.

1. What is the power used by an electric motor that draws a current of 15 A from a 240 V power source?
   A. 16 W
   B. 255 W
   C. 1800 W
   D. 3600 W
2. To calculate an alternating current's root mean square voltage, multiply the maximum voltage value by _____.
   A. 0.637
   B. 0.707
   C. 1.57
   D. 3.14
3. Since resistance limits the flow of current, it causes _____.
   A. a voltage drop
   B. an open circuit
   C. voltage to lag behind current
   D. current to lag behind voltage
4. When voltage and current reach their positive and negative peaks at the same time in an alternating current cycle, they are said to be _____.
   A. out of phase
   B. in phase
   C. root mean square values
   D. power factors

Copyright Goodheart-Willcox Co., Inc.

5. Inductive reactance affects the true power of a circuit because it causes _____.
   A. a ground fault
   B. an open circuit
   C. voltage to lag behind current
   D. current to lag behind voltage
6. Capacitive reactance affects the true power of a circuit because it causes _____.
   A. a ground fault
   B. an open circuit
   C. voltage to lag behind current
   D. current to lag behind voltage
7. Which of the following values is always calculated in volt-amperes?
   A. Power factor
   B. Apparent power
   C. True power
   D. Reactive power
8. Electricity distributed in North America has a frequency of _____ Hz.
   A. 50
   B. 60
   C. 120
   D. 240
9. The most widely used polyphase power arrangement used in HVACR is _____ power.
   A. one-phase
   B. three-phase
   C. four-phase
   D. nine-phase
10. The power source that supplies power to a Class 2 circuit *cannot* have an output greater than _____.
    A. 30 V and 1000 VA
    B. 5 V and 750 VA
    C. 24 V and 500 VA
    D. 120 V and 250 VA
11. Electrical wire size is specified by the _____.
    A. National Electrical Code (NEC)
    B. National Electrical Manufacturers Association (NEMA)
    C. Refrigeration Service Engineers Society (RSES)
    D. American Wire Gage (AWG)
12. A form of circuit protection that only regulates current flow by changing its resistance based on heat is a _____.
    A. circuit breaker
    B. fuse
    C. thermistor
    D. ground fault circuit interrupter (GFCI)
13. A form of circuit protection that opens the circuit if it detects an imbalance between the ungrounded and grounded wires of a circuit is a _____.
    A. circuit breaker
    B. fuse
    C. thermistor
    D. ground fault circuit interrupter (GFCI)
14. A form of circuit protection that employs a solenoid to open the circuit if current exceeds a predetermined level is a _____.
    A. circuit breaker
    B. fuse
    C. thermistor
    D. ground fault circuit interrupter (GFCI)
15. A form of circuit protection that contains a metal conductor that melts to open a circuit when current is too high is a _____.
    A. circuit breaker
    B. fuse
    C. thermistor
    D. ground fault circuit interrupter (GFCI)
16. A GFCI opens when as little as _____ amperes leaks out of a circuit and into the grounding system.
    A. 0.001
    B. 0.002
    C. 0.004
    D 0.006
17. An ungrounded conductor is also sometimes called a _____.
    A. neutral wire
    B. grounding rod
    C. hot wire
    D. equipment grounding conductor
18. Joining all the metallic components of an electrical system, even those that do not normally carry current, is defined as _____.
    A. grounding
    B. faulting
    C. bonding
    D. joining
19. The ground wire in an HVACR electrical circuit is always _____.
    A. green
    B. blue
    C. red
    D. black

Copyright Goodheart-Willcox Co., Inc.

20. Which electrical problem involves extremely high current going around an electrical load?
    A. Open circuit
    B. Voltage drop
    C. Overload
    D. Short circuit
21. Which electrical problem involves a circuit's applied voltage being reduced along a conductor to a level that is too low for safe use on the electrical load?
    A. Open circuit
    B. Voltage drop
    C. Overload
    D. Short circuit
22. Which electrical problem creates a dangerous electrical shock situation that involves a device or ungrounded metal becoming electrically hot or live?
    A. Ground fault
    B. Voltage drop
    C. Overload
    D. Open circuit
23. Which electrical problem involves overcurrent due to an incorrect power supply, equipment failure, too many loads connected, or electromechanical equipment operating under strain?
    A. Ground fault
    B. Voltage drop
    C. Overload
    D. Open circuit
24. Which electrical problem is a break in the current's path resulting from a bad electrical connection, broken wire, open fuse or circuit breaker, or a burned out component?
    A. Open circuit
    B. Voltage drop
    C. Overload
    D. Short circuit
25. Which electrical problem is most likely to blow a fuse or trip a circuit breaker immediately as it occurs?
    A. Open circuit
    B. Voltage drop
    C. Overload
    D. Short circuit

Copyright Goodheart-Willcox Co., Inc.

CHAPTER 14 Basic Electronics

Chapter Outline

14.1 Semiconductor Basics
- 14.1.1 P-Type and N-Type Materials
- 14.1.2 Diodes

14.2 Control Circuits and Electronic Devices
- 14.2.1 Diacs
- 14.2.2 Silicon-Controlled Rectifiers and Triacs
- 14.2.3 Transistors
- 14.2.4 Rectifiers and Inverters
- 14.2.5 Thermistors
- 14.2.6 Photoelectric Devices

14.3 Circuit Boards and Microprocessors
14.4 Switches and Contacts
14.5 Relays
14.6 Solenoids
14.7 Thermocouples

Learning Objectives

Information in this chapter will enable you to:

- Discuss how electrons and holes move through a semiconductor based on the principle of hole flow.
- Explain how forward biased and reverse biased diodes affect the flow of current in a circuit.
- Define a control circuit and distinguish between electronic and electrical devices used in a control circuit.
- Summarize the operation of various electronic semiconductor devices and how they are used in HVACR systems.
- Understand the purpose of microprocessors and computers in HVACR systems.
- Contrast the operation of various electrical devices, such as switches, relays, solenoids, and thermocouples.

Technical Terms

anode
cathode
contacts
control circuit
diac
diode
doping
forward bias
hole flow
inverter
microprocessor
negative temperature coefficient (NTC)
normally closed (NC)
normally open (NO)
N-type material
ohmmeter
photoelectric device
pole
positive temperature coefficient (PTC)
printed circuit board (PCB)
P-type material
rectifier
relay
reverse bias
Seebeck effect
sensor
silicon-controlled rectifier (SCR)
solenoid
solid-state device
switch
thermistor
thermocouple
throw
transducer
transistor
triac

Review of Key Concepts

Reviewing these concepts from earlier chapters will help you understand new concepts presented in this chapter:

- Unlike polarities attract or move toward each other. Like polarities repel or move away from each other. (Chapter 12)
- Semiconductor devices often serve as switching devices because their conductivity can be controlled by an electrical signal, light intensity, pressure, temperature, or other variable or device. (Chapter 12)
- A thermistor regulates the flow of electric current by changing its resistance based on ambient heat. (Chapter 13)
- The magnetic effect caused by current passing through a coiled conductor is called electromagnetism. (Chapter 12)

Introduction

The basis of all electronic devices is semiconductor material. Having a good understanding of how semiconductors can be used to conduct or block the flow of current in a circuit will help a technician comprehend how individual electronic devices function. Electronic devices are used in control circuits to regulate an HVACR system and maintain stable conditions. Electronic devices help to prevent a system from operating outside of its designed boundaries.

Some electronic devices monitor conditions outside of an HVACR system and tell the system when to turn on or off. Other devices are used to control or alter the flow of electricity in a circuit, which can be useful for converting current from one form to another, varying the speed of a motor, or turning a motor on or off. In addition, other devices are used to control the flow of refrigerant or other fluids in a system.

14.1 Semiconductor Basics

Semiconductors are substances, such as silicon and germanium, that can be made to conduct electricity under certain conditions. This is done by adding impurities to pure silicon or germanium, which causes an excess or shortage of electrons in the semiconductor material. Each time an electron moves from one atom to another, it leaves a hole behind that is filled by an electron from an adjacent atom. Semiconductors conduct electricity based on the principle of hole flow.

14.1.1 P-Type and N-Type Materials

When impurities are added to a pure semiconductor, such as silicon, it is called ***doping***. Elements, such as boron, aluminum, phosphorous, and antimony, are just a few of the impurities that can be added to a pure semiconductor to change its conduction traits. Doping produces two different types of semiconductor materials depending on whether the impurity causes an excess or a shortage of electrons in the material.

N-type material has a surplus of electrons. The *N* is for *negative*, meaning that it has gained electrons, which have a negative (–) charge. ***P-type material*** has holes, or positively charged (+) spaces, that are ready to receive electrons. The *P* is for *positive* because the lack of electrons means that P-type material has fewer negative charges. Because opposite charges attract each other, surplus electrons in N-type material are strongly attracted to positively charged holes in P-type material.

Hole flow is the principle that explains how electrons and holes move through a semiconductor. When an electron fills up a positively charged hole, it leaves a positive hole in its place. As a result, the positive hole that it leaves behind is then filled by the next electron. A chain reaction occurs in which electrons flow through a semiconductor in one direction, while holes move in the opposite direction, **Figure 14-1**.

Semiconductor, or solid-state, devices are formed from various combinations of P-type and N-type materials. Different types of semiconductor devices can be formed by altering how the materials are joined and how they are connected to a power source.

Pro Tip

Solid-State Devices

Semiconductor devices used in electronic circuits can also be called ***solid-state devices***. This is because there are no moving parts in a semiconductor. The switch from insulator to conductor is done on the atomic level. Rather than switches moving between contacts, electrons and holes realign to allow conduction.

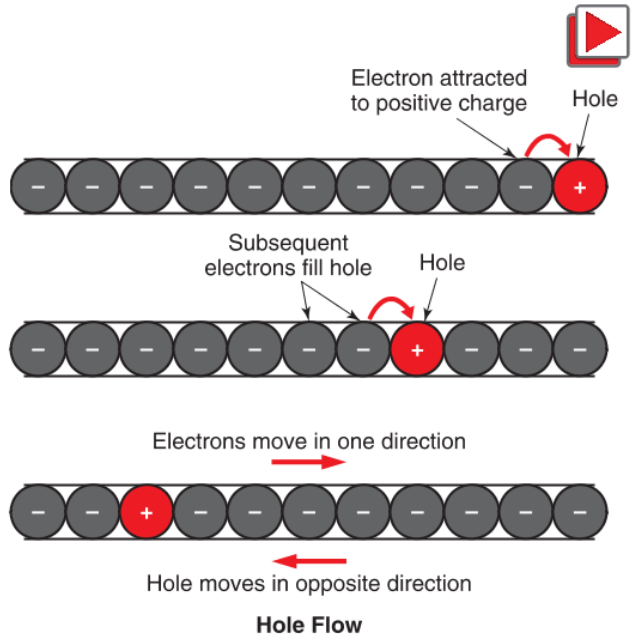

Goodheart-Willcox Publisher

Figure 14-1. Electricity flowing through a semiconductor is conducted by the movement of holes. Negatively charged electrons move in one direction, while positively charged holes move in the opposite direction.

14.1.2 Diodes

A ***diode*** is a simple solid-state device composed of a P-type material and an N-type material. At the junction of the two types of materials, called the P-N junction, a natural insulator is formed. Some of the negatively charged electrons at the junction fill the positively charged holes, which creates a barrier. The joined electrons and holes repel their like charges on each side

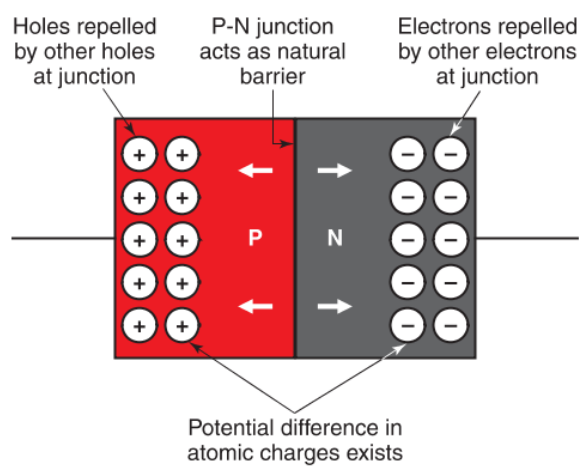

Goodheart-Willcox Publisher

Figure 14-2. The P-N junction of a diode forms a natural barrier between the P-type and N-type materials. A potential voltage exists because there is a difference in atomic charges between the two materials.

Copyright Goodheart-Willcox Co., Inc.

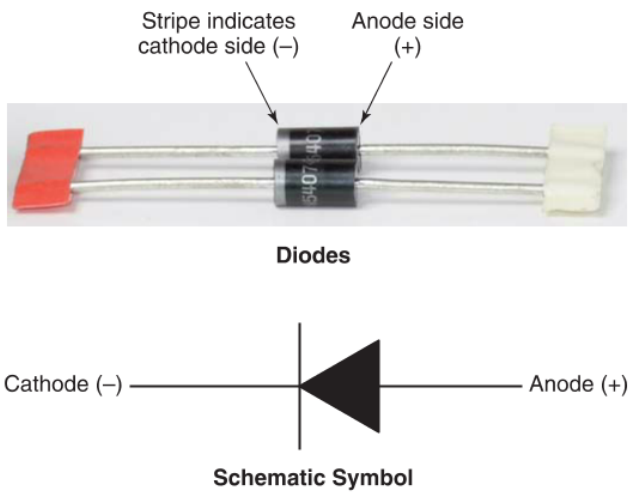

Goodheart-Willcox Publisher

Figure 14-3. Diodes have a stripe on one end indicating which end is the cathode. The bottom image shows how the cathode and anode are indentified in the schematic symbol for a diode.

of the junction, preventing electrons from crossing the barrier to fill more holes. This barrier creates a potential difference, or potential voltage, between the positively charged P-type material and negatively charged N-type material, **Figure 14-2**.

The positively charged side of a diode is called the ***anode*** and contains the P-type material. The negatively charged side of a diode is called the ***cathode*** and contains the N-type material. Typically, a diode is marked with a stripe at one end, which indicates the cathode end, **Figure 14-3**.

Electrons will flow through a diode in only one direction: from the cathode to the anode. Occasionally, technicians will refer to a diode as a rectifier because that is the function it performs in an ac circuit. A rectifier is used in a circuit to convert alternating current (flows in two directions) to direct current (flows in only one direction).

When a diode is connected in a circuit to a dc power source, the polarity of the power source determines whether electrons will flow through the diode or not. If the negative terminal of a battery is connected to the cathode, and the positive terminal is connected to the anode, current will flow in the circuit. This setup is called ***forward bias***, **Figure 14-4**.

Since like charges repel each other, the battery's negative polarity repels the negatively charged electrons toward the P-N junction. Likewise, the battery's positive polarity repels the positively charged holes toward the junction as well. If the power source provides enough voltage to overcome the junction's potential difference, then the electrons and holes join at the barrier, allowing current to flow through the circuit.

If the positive terminal of a battery is connected to the cathode, and the negative terminal is connected

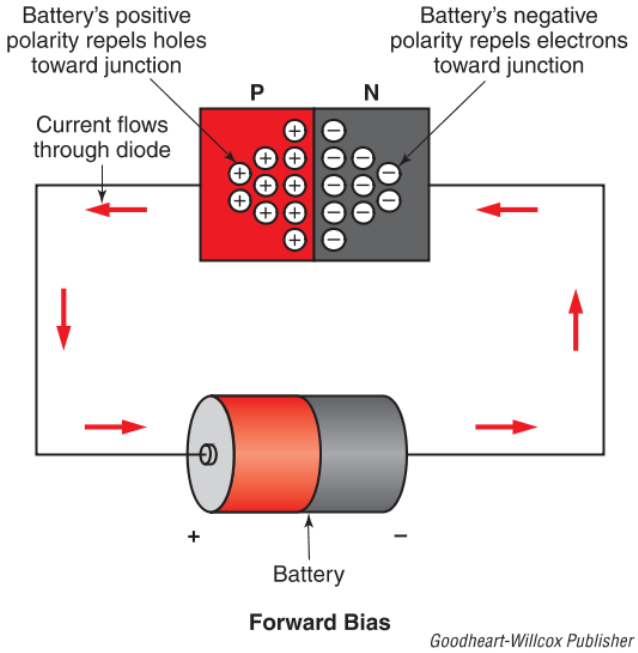

Goodheart-Willcox Publisher

Figure 14-4. A forward bias setup allows current to flow through a diode because the battery's polarities repel both the holes and electrons toward the junction. With enough voltage, the electrons overcome the barrier, fill the holes, and flow through the circuit.

to the anode, current will *not* flow in the circuit. This setup is called ***reverse bias***, **Figure 14-5**.

Since opposite charges attract, electrons in the cathode move away from the junction toward the battery's positive polarity, and the positively charged holes do

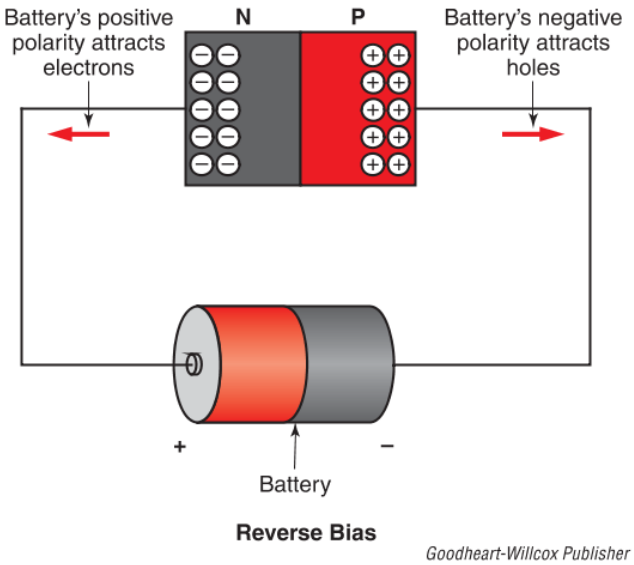

Goodheart-Willcox Publisher

Figure 14-5. A reverse bias setup prevents current from flowing through a diode because the battery's polarities attract both the holes and electrons away from the junction.

Copyright Goodheart-Willcox Co., Inc.

likewise on the anode side. As a result, current cannot flow through the circuit. A reverse bias setup essentially increases the potential voltage barrier at the P-N junction.

Testing a Diode

To test a diode, use an ohmmeter. An ***ohmmeter*** is an instrument that can be used to measure the resistance of a circuit or an electronic device, such as a diode.

1. Set the range switch for the ohmmeter to its lowest setting (×1 or ×10).
2. Connect the negative probe of the ohmmeter to the cathode and the positive probe to the anode. This is a forward bias setup.
3. The ohmmeter should show a low resistance reading, indicating continuity through the diode.
4. Reverse the ohmmeter's probe connections so the positive probe is connected to the cathode and the negative probe to the anode. This is a reverse bias setup.
5. The ohmmeter should show a very high resistance.
6. If the ohmmeter shows a very high resistance for both setups or a very low resistance for both setups, then the diode is defective.

14.2 Control Circuits and Electronic Devices

A ***control circuit*** is a circuit that uses electrical or electronic devices to control current flow, causing loads in the power circuit to be either energized or de-energized. Control circuits for HVACR systems use a variety of devices that enable the equipment to operate and respond quickly and efficiently to user instructions and programming. A simple example of a control circuit is the thermostat in a home's central air conditioning system. The thermostat senses that the temperature inside has reached its setpoint, so it closes the 24 Vac control circuit to the condensing unit's contactor coil. The contactor energizes to close its contacts on the 230 Vac power circuit to turn on the condenser fan and compressor. The thermostat uses the low-voltage control circuit (24 Vac) to control the higher voltage power circuit (230 Vac), **Figure 14-6**.

Pro Tip

Electrical vs. Electronic

The terms *electrical* and *electronic* may appear to indicate the same thing, but they are very different. An electronic device is a semiconductor or solid-state device used to control the flow of current. The term electronic circuit indicates a circuit that has electronic devices.

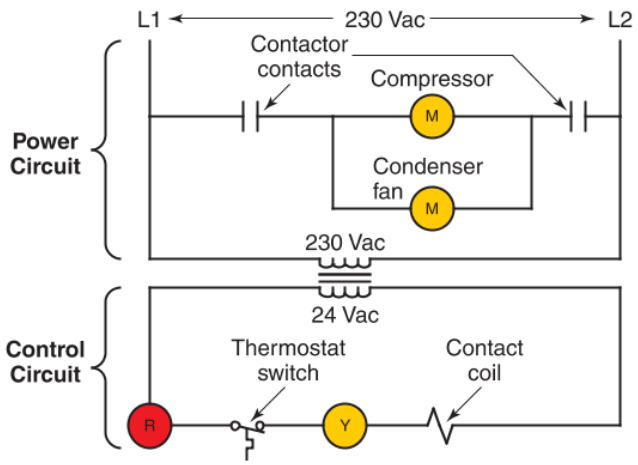

Goodheart-Willcox Publisher

Figure 14-6. A low-voltage control circuit is often used to operate a higher voltage power circuit as shown with this simple air-conditioning circuit.

An electrical device is any device that controls the flow of current without the use of semiconductors or solid-state components. Devices such as light switches, which have moving parts, or transformers, which use electromagnetism, are examples of electrical devices. An electrical circuit is simply a circuit without electronic (semiconductor) devices.

In many control circuits, control signals are produced or modified by sensors. ***Sensors*** are devices that detect and respond to some kind of stimulus, such as changes in temperature or pressure. Many sensors are electronic devices. Some typical HVACR variables that sensors monitor include room temperature, outside (ambient) temperature, humidity, compressor temperature, and refrigerant pressure.

Because they often respond to a stimulus other than electricity, many sensors rely on transducers to communicate with the control circuit. A ***transducer*** is a device that converts an input signal from one form of energy to an output signal of another form of energy. Sensors that do not produce an electrical output must use a transducer to change the sensor's output into an electrical signal. In HVACR, many sensors are also transducers because they produce an electrical output signal while monitoring a different input signal.

The following sections describe the operation and purpose of individual electronic devices used in HVACR control circuits. Many sensors and transducers include the electronic devices described in these sections.

14.2.1 Diacs

A ***diac*** (diode for alternating current) is a solid-state device that allows current to flow in both directions. In

Copyright Goodheart-Willcox Co., Inc.

order for current to flow through a diac, the applied voltage must reach or exceed a predetermined level, called the breakover voltage. Applied voltage below the breakover voltage will not be able to force current through a diac, **Figure 14-7**.

After the breakover voltage has been exceeded, a diac will continue to conduct electricity until the current falls below a certain threshold, called the holding current. A diac stays in conduction mode as long as the holding current stays above the threshold value. If the current falls below the holding current threshold, the diac stops conducting electricity. A voltage that meets or exceeds the breakover voltage must be applied to the diac for it to begin conducting again.

Diacs are often used in HVACR as part of the control circuit in motors. A diac serves to protect the motor from operating at low-voltage conditions because it will only allow a predetermined voltage to pass through it to the motor. If the start capacitor is not energized, there will not be enough voltage to power the start windings of the motor. Once the breakover voltage has been reached from the capacitor, the diac will allow the current to flow to the motor and the motor will engage.

14.2.2 Silicon-Controlled Rectifiers and Triacs

A ***silicon-controlled rectifier (SCR)*** is a three-terminal semiconductor switching device. The three terminals are a cathode, an anode, and a gate. An SCR conducts current in only one direction: from cathode to anode, **Figure 14-8**.

SCR conduction can be triggered when either one of the following conditions is met:

- A voltage value that reaches or exceeds the SCR's forward breakover voltage is applied across the cathode and anode.
- A voltage is applied to the gate circuit causing current to flow from cathode to anode.

The signal from the gate that triggers the SCR does not have to equal the breakover voltage and is usually relatively small. Similar to a diac, an SCR will conduct

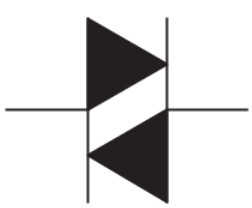

Diac

Goodheart-Willcox Publisher

Figure 14-7. Schematic symbol for a diac. Note how the symbol looks like two diode symbols arranged in opposite directions.

SCR

Goodheart-Willcox Publisher

Figure 14-8. Schematic symbol for a silicon-controlled rectifier. Note how the symbol looks like a diode symbol, but with an additional lead called a gate.

current as long as the current does not drop below the holding current threshold. An SCR will also continue to conduct current even if the gate circuit is opened. Turning off an SCR can be done using either one of the following two methods:

- The current in the circuit is lowered below the holding current threshold. This is often accomplished by opening a switch.
- Applying a reverse voltage to the cathode. In an ac circuit, this occurs every half cycle when the voltage and current switch direction.

SCRs are often used to convert dc voltage to ac voltage in a device called an inverter. Modern HVACR motors, such as blower motors and compressor motors, make use of inverters in variable frequency drives to control the speed of a variable speed motor. The frequency of the voltage supplied to a motor affects the motor's speed. In a variable speed motor with a variable frequency drive, a rectifier is used to change the ac input voltage to dc voltage. The dc voltage is then adjusted by an inverter to provide a variable frequency signal that looks like ac voltage to the motor.

Thinking Green

Variable Speed Motors

The advantage of a variable speed motor that uses a variable frequency drive is that it can be run at specifically the amount of power required based on the load. This provides smoother operation and significantly reduces energy consumption.

A ***triac*** (triode for alternating current) is a solid-state device used to control alternating current. It has three terminals and operates much like an SCR. Applying the proper electrical signal to the gate terminal will begin conduction through the two main terminals, **Figure 14-9**.

A triac will continue to conduct even if the gate circuit is opened. Unlike an SCR, a triac can conduct current in both directions for alternating current. A triac will stop conducting when current drops below the preset holding current threshold. Triacs are used in ac motors to control motor speed.

Copyright Goodheart-Willcox Co., Inc.

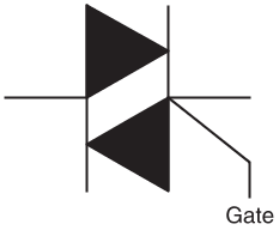

Triac

Goodheart-Willcox Publisher

Figure 14-9. Schematic symbol for a triac. The symbol is similar to the symbol for a diac, but with a gate terminal.

14.2.3 Transistors

A ***transistor*** is a layered, three-terminal semiconductor device that is usually used to either switch or amplify an electrical signal. The three layers are composed of two different types of semiconductor materials (N-type and P-type) and are arranged in one of two ways: NPN or PNP, **Figure 14-10**.

The three layers of a transistor are assigned names. The middle layer is called its base. One of the outer layers is called its emitter, and the other outer layer is called its collector. The emitter and collector layers are made of the same material, either N or P. The base material is made of whatever material the emitter and collector are not made.

Transistors can function as electronic switches by using a small electron flow through the base to control a large electron flow between the emitter and the collector. Think of a transistor as an electrically operated valve. Transistors can also act as amplifiers by boosting a low-energy signal using a power supply and surrounding circuitry, **Figure 14-11**.

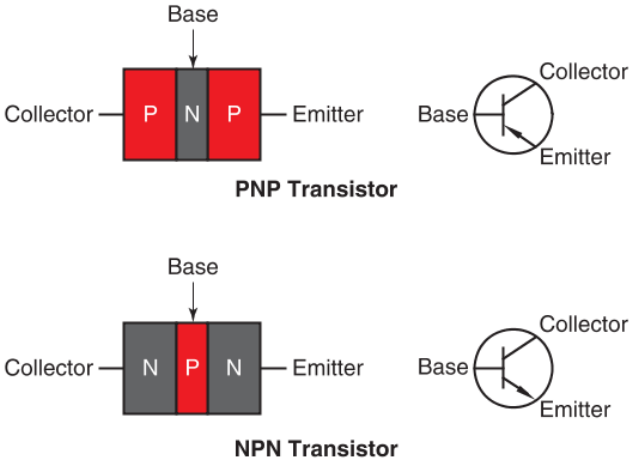

Goodheart-Willcox Publisher

Figure 14-10. The layers of a transistor are arranged as either PNP or NPN. The schematic symbols for each arrangement are shown on the right.

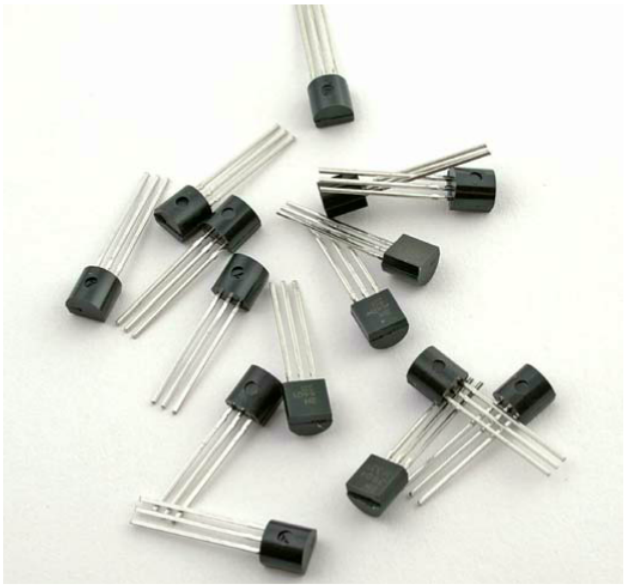

Goodheart-Willcox Publisher

Figure 14-11. Since transistors are often very small, it is important to consult a data sheet with the part number to confirm a transistor's identity.

14.2.4 Rectifiers and Inverters

A ***rectifier*** is an electronic circuit that converts alternating current to direct current. Rectifiers are commonly made from an arrangement of diodes. Because a diode allows current to flow in only one direction, it blocks alternating current from flowing in the opposite direction, producing a direct current output.

A half-wave rectifier circuit, which has only one diode, produces a direct current output for only one-half of the ac sine wave, **Figure 14-12A**. To produce a direct current with no gaps between the waves, a full-wave rectifier circuit is needed. Many full-wave rectifier circuits use a bridge rectifier, which is an arrangement of four diodes in a circuit, to produce direct current output from both halves of the ac sine wave. See **Figure 14-12B**.

Rectifiers are often used in conjunction with transformers to change 120 V alternating current into low-voltage direct current for control circuits, such as 24 Vdc or 12 Vdc. A transformer alone is used to step down 120 Vac to 24 Vac for many useful applications.

While a rectifier converts ac to dc, an ***inverter*** converts dc to ac. An inverter does the opposite of a rectifier, though it is not as easily done as rectifying a signal. Solid-state inverters operate without any moving mechanical parts. The basic elements used in a solid-state inverter are the following:

- A crystal that oscillates at the frequency of the ac power required.

Copyright Goodheart-Willcox Co., Inc.

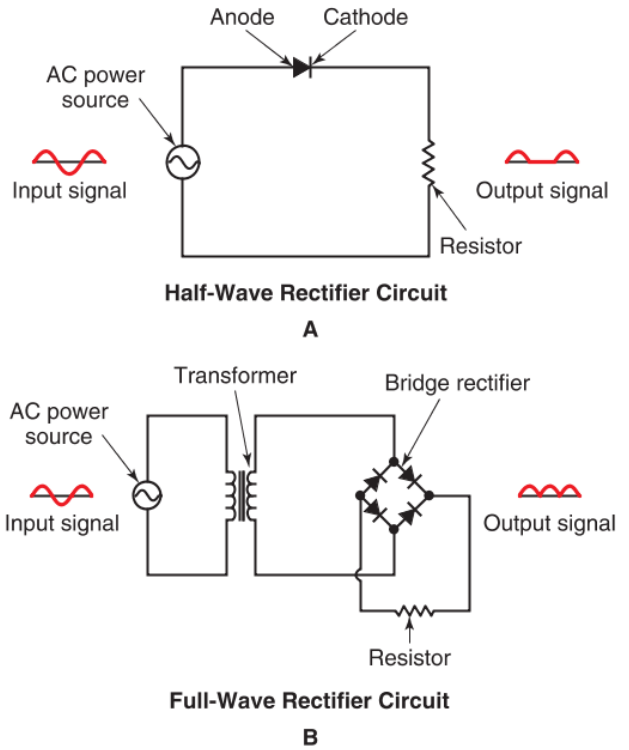

Goodheart-Willcox Publisher

Figure 14-12. A—A half-wave rectifier circuit allows alternating current to pass in only one direction. As a result, a pulsating or half-wave, dc output is produced from the ac sine wave input. B—Full-wave rectifier circuits use a bridge rectifier to produce a dc output from both halves of an ac sine wave. This results in a dc output signal with no gaps between the ac input waves.

- A switching circuit that uses silicon-controlled rectifiers to switch dc power on and off.

A common application of inverters is with solar photovoltaic cells. The photovoltaic cells produce a direct current that feeds into an arrangement of batteries. Since typical electrical power in the US is in alternating current, an inverter takes the dc input from the batteries and converts it into an ac signal.

The complicated circuitry inside inverters can be used to produce very precisely controlled signals for specific use. A common HVACR application of inverters is to provide variable speed control of motors. These can be applied to blowers for variable air volume control and to compressors for variable refrigerant flow, **Figure 14-13**.

14.2.5 Thermistors

A ***thermistor*** is a solid-state device that changes its resistance as the temperature of the thermistor changes. There are two basic types of thermistors: NTC and PTC. Thermistors that decrease their resistance as temperature increases are ***negative temperature coefficient (NTC)*** thermistors. For NTC thermistors, temperature and resistance are inversely related. Thermistors that increase their resistance as temperature increases are ***positive temperature coefficient (PTC)*** thermistors. For PTC thermistors, resistance and temperature are directly related. Thermistors can be packaged in a variety of ways for different applications, **Figure 14-14**.

with permission from Carel Industries - all right reserved

Figure 14-13. An inverter driving a variable speed compressor can increase a system's coefficient of performance to maximize energy usage.

Selco Products Company

Figure 14-14. Thermistors may be manufactured in a variety of different designs.

Copyright Goodheart-Willcox Co., Inc.

A thermistor is used as a temperature-sensing control device. Thermistors may be used to turn off or stop electrical power from going to an overheating motor. For example, as the temperature of a motor increases, the resistance of a PTC thermistor also increases, which reduces current and stops the motor.

Thermistors are often used in large buildings as remote temperature-sensing devices. They permit an HVACR technician to monitor the temperature in a remote location from an operating console. Thermistors are also used in electronic circuit boards to make sure that the circuitry does not exceed recommended operating temperatures.

14.2.6 Photoelectric Devices

Photoelectric devices are semiconductor devices that react to light in some way. This may be a change in their ability to conduct electricity, the production of an electrical signal in response to visible, infrared, or ultraviolet light, or the emission of light in response to an applied voltage. There are three types of photoelectric devices:

- Photoconductor devices. These semiconductor devices increase their conductivity when exposed to electromagnetic radiation. They are used in photocopiers and infrared camera devices.
- Photovoltaic (PV) devices. These semiconductor devices produce electrical energy when they absorb light. Another common name for a photovoltaic devices is *solar cell*. The electrical energy produced by PV devices can provide dc power for a variety of applications.
- Photoemissive devices. These semiconductor devices give off light when electrical energy is added. The semiconductor material in a light emitting diode (LED) converts the voltage applied to it into visible light. LEDs are used as indicators and displays on control boards, **Figure 14-15**.

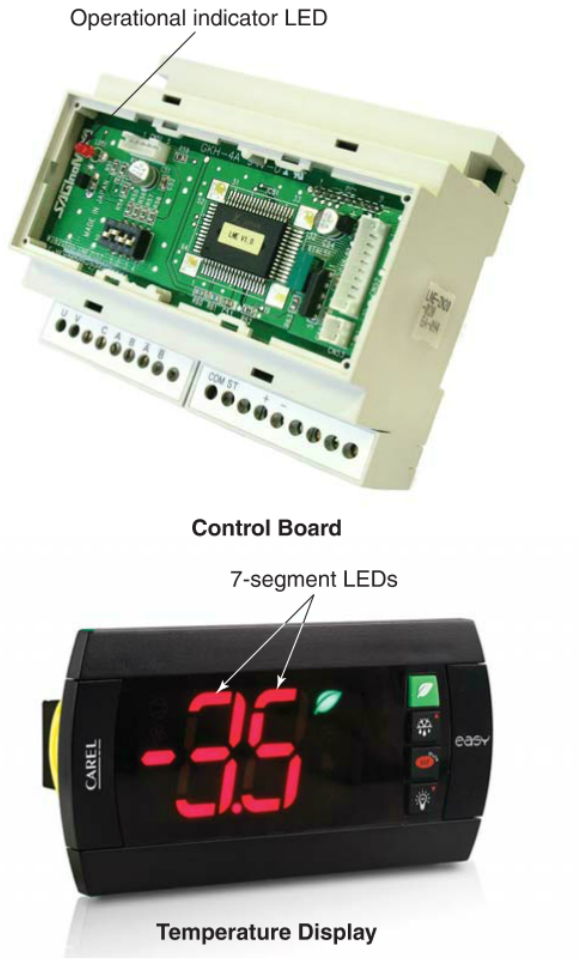

Danfoss; with permission from Carel Industries - all right reserved

Figure 14-15. LEDs are one of the most commonly used photoelectric devices.

14.3 Circuit Boards and Microprocessors

Many of the devices covered in the previous sections can be found on printed circuit boards. A ***printed circuit board (PCB)*** is an insulated board with thin layers of conductive metal, usually copper, placed in strips on the board. These copper strips act as electrical pathways to connect electronic devices. Typically, electronic devices are soldered to the circuit board. See **Figure 14-16**.

When a specific electronic device does not work on a circuit board, the easiest and quickest option is often to replace the entire circuit board. Circuit boards help to

Emerson Climate Technologies

Figure 14-16. Electronic devices are soldered to the conductive pathways on this printed circuit board from a furnace.

Copyright Goodheart-Willcox Co., Inc.

simplify the servicing of HVACR systems because a technician does not have to take the time to test each individual electronic device. The malfunctioning circuit board can then be repaired at a later time or discarded.

With the advancement of semiconductor technology, a single device can function as the control center of an entire system. Such a component is commonly known as a ***microprocessor***, **Figure 14-17**.

Microprocessors are capable of accepting information, storing it, and reacting in some preset way. They are the core around which computers are built. Computers use microprocessors as their "thinking" component. In HVACR, microprocessors are provided with input signals (from temperature sensors, pressure sensors, thermostats) and then produce output signals (to LEDs, solenoids, actuators, relays).

The small size and affordability of microprocessors has allowed computers to assume an important role in the HVACR industry. They are an integral part of many control systems. In most cases, a computer-supported HVACR system can even provide a diagnostic analysis for that system.

14.4 Switches and Contacts

A device used to open or close any part of an electrical circuit by disconnecting and connecting contacts is called a ***switch***. Switches can be made from a variety of materials in numerous designs. Some are operated manually, while some are operated automatically. Switches and switched devices, such as relays and contacts, contain contacts. ***Contacts*** are the physical parts that touch to complete an electrical circuit.

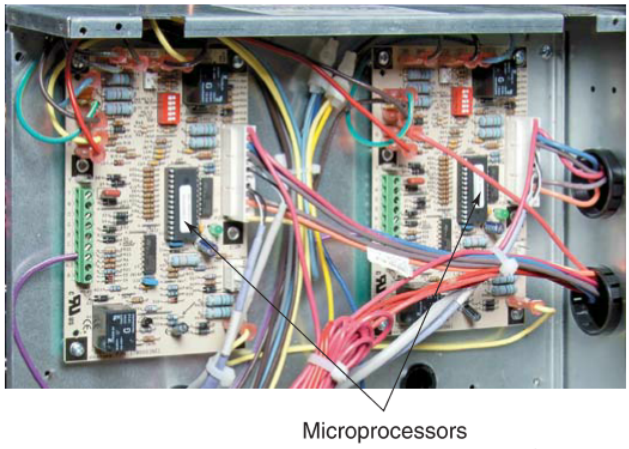

ClimateMaster

Figure 14-17. Though available in different designs, microprocessors are often packaged as long chips with many terminal connections. These two microprocessors control the operation of a commercial heat pump.

The arrangement inside a switch is described in terms of *poles* and *throws*. A ***pole*** is the movable part of the switch. The movement of a pole is ***throw***. A switch may have a single pole with more than one throw. Arrangements vary.

A single-throw switch provides only one path that can be turned on and off. A double-throw switch provides two paths for electrons to follow. A single-throw switch controls only one circuit, and a double-throw switch can control two circuits. **Figure 14-18** shows the most common types of switches.

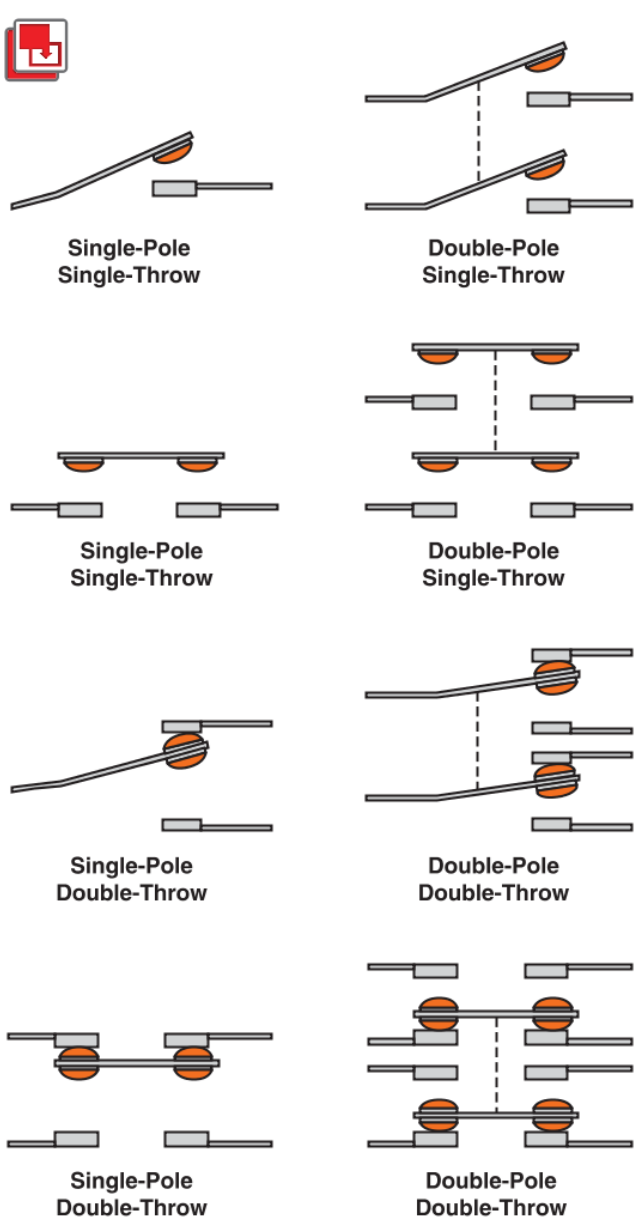

Micro Switch, Div. of Honeywell, Inc.

Figure 14-18. These are the most common switch arrangements. Only the orange contacts are movable.

Copyright Goodheart-Willcox Co., Inc.

Most switches and contacts have two states: open and closed. An open switch has broken the circuit and is not conducting electrons. A closed switch has completed the circuit and is conducting electrons. In control circuitry, switches and sets of contacts are classified as normally open (NO) or normally closed (NC).

Normally open (NO) means that the contacts are usually open. Normally open contacts are closed only when the switch is actuated. When it has not been actuated, the circuit is open. When an action occurs to close a NO switch, such as a call for heating, the switch closes. ***Normally closed (NC)*** means that the contacts are usually closed. Normally closed contacts are open only when the switch is actuated. Each of these states (NO and NC) is important in system operation and used for specific reasons.

14.5 Relays

A ***relay*** is an electrical switching device that operates under the control of an outside electrical signal. Their enclosed electrical contacts are operated by an electromagnet. The outside electrical signal energizes the relay's electromagnetic coil, which moves an armature to change the contacts position. Normally, the armature is held in position by a spring. When power is applied across the coil, NO contacts close, and NC contacts open, **Figure 14-19**.

The amount of current used to operate a relay's coil is usually very small; however, the contacts in the relay can often carry much higher currents. The coil of a relay is often connected to a low-voltage control circuit, and the relay contacts are connected to a separate higher voltage, load circuit. When a low-voltage signal flows through the control circuit, it energizes the coil and creates an electromagnetic field that draws the movable armature toward the coil. This movement causes the armature to open the NC contacts and close the NO contacts. This completes the load circuit and energizes the load, **Figure 14-20**.

When there is no current through the coil, the spring moves the armature back into position, which returns the NO and NC contacts to their normal state. Relays are commonly used to run fans, start single-phase motors, and control power circuits. Not all relays use electromagnets and moving parts. Some use solid-state circuitry, but they produce the same expected results.

14.6 Solenoids

A ***solenoid*** is an electromagnetic device composed of a coil of wire wrapped around a case with a movable iron core, which is called a plunger. As current passes through the coil, it creates an electromagnetic force that pulls the plunger into the center of the case (solenoid body). See **Figure 14-21**.

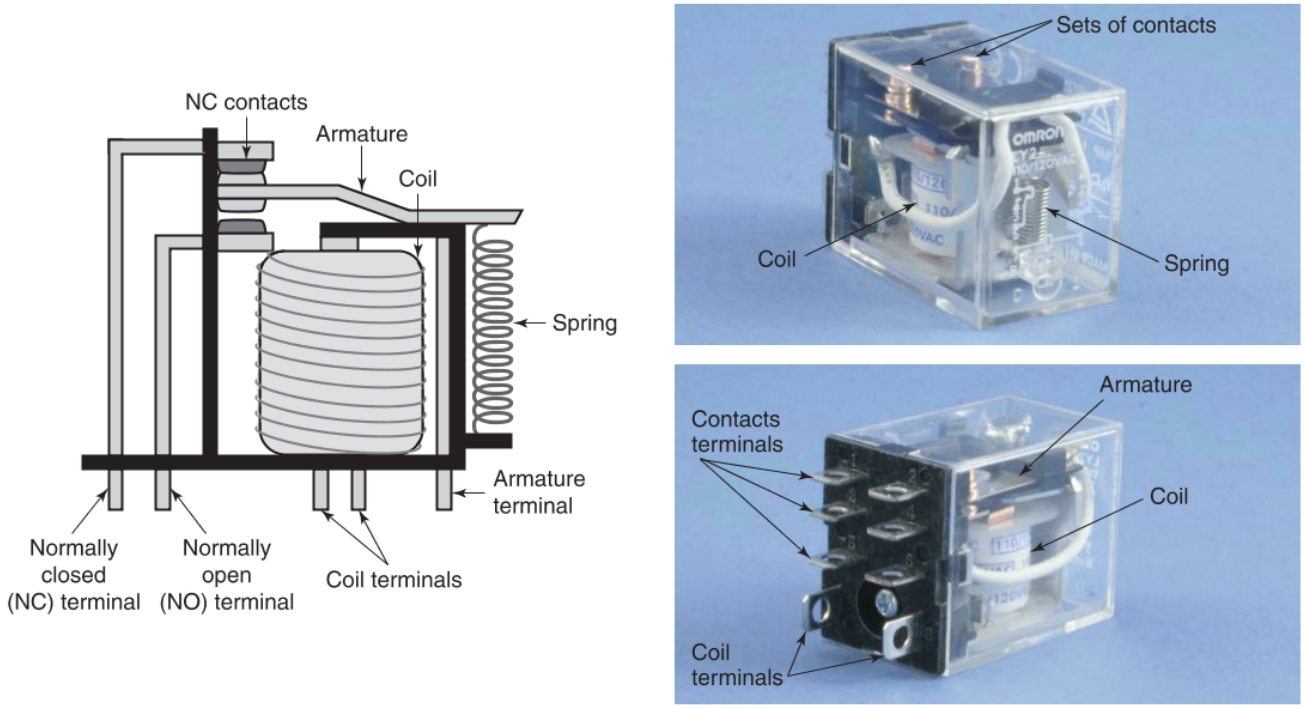

Goodheart-Willcox Publisher

Figure 14-19. These are the parts of a relay: a coil with two terminals, at least one set of each type of contacts (NO and NC), a spring to hold the armature in position to maintain NO and NC states when the coil is not energized.

Copyright Goodheart-Willcox Co., Inc.

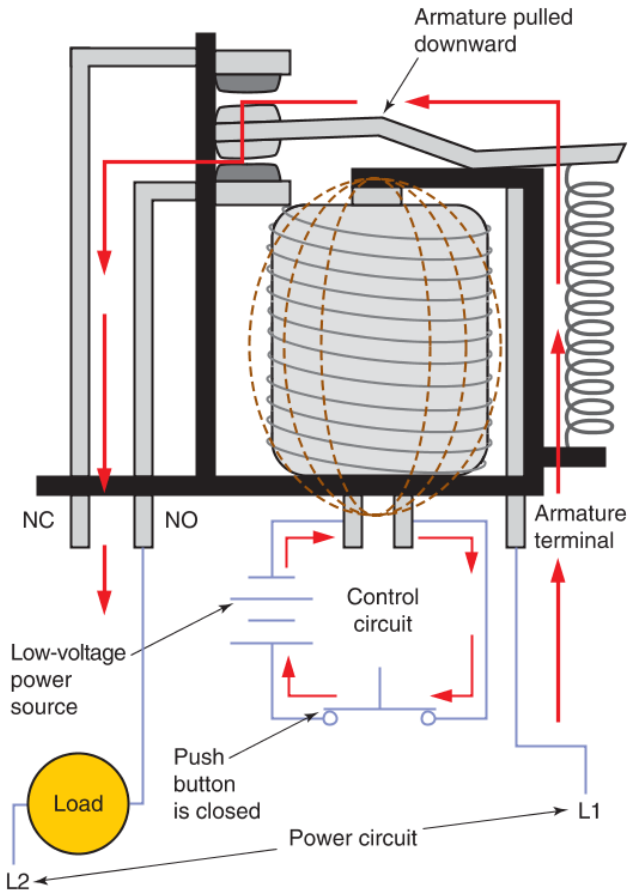

Goodheart-Willcox Publisher

Figure 14-20. When the control circuit is closed, current flows through the coil creating an electromagnetic field. The energized coil attracts the armature to close the NO contacts and open the NC contacts, which closes the power circuit to energizes the load.

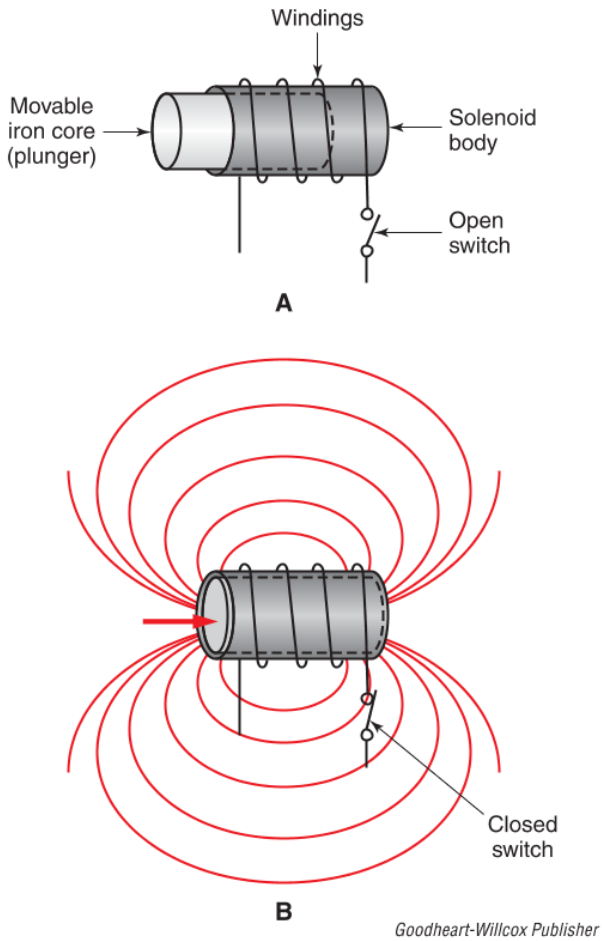

Goodheart-Willcox Publisher

Figure 14-21. A—A solenoid's iron core remains outside the solenoid body when no electric current is flowing. B—With current flowing, the electromagnetic field draws the iron core into the solenoid body.

A solenoid's plunger typically has a spring attached to it, which pulls the plunger out of the solenoid body when current is turned off. Other solenoids simply use gravity. The plunger is allowed to fall when the current is turned off. To function properly, a solenoid that uses gravity must be mounted upright.

Solenoids are an example of turning electrical energy into mechanical motion. Solenoids are commonly installed into a valve body to operate as an electrically controlled valve. In this way, they can control refrigerant, gas, or water flow. The plunger opens and closes a valve as current is applied to and removed from the coil, **Figure 14-22**.

Solenoids can also be used to operate dampers, actuate other switches (such as in some defrost timeclocks), and make different desired movements in a mechanism. Solenoids are available as either normally open or normally closed. Different models can operate on ac or dc voltage.

Courtesy of Sporlan Division – Parker Hannifin Corporation

Figure 14-22. The solenoid mounted on this fixture opens and closes the valve. Solenoid valves can be used in numerous applications throughout different systems.

Copyright Goodheart-Willcox Co., Inc.

14.7 Thermocouples

A ***thermocouple*** is a pair of two dissimilar wires joined at one end that can generate a voltage based on the amount of heat applied to it. Each wire is made of a different metal. The end of the wires that are welded together is called the hot junction. The other end of the wires (the cold junction) is connected into circuitry. When the joined end is heated, a small voltage (potential difference) develops between the two metals. This voltage can be measured at the other ends of the two wires with a sensitive voltmeter, **Figure 14-23**.

A thermocouple can be made from a variety of metals. Different pairs of metals produce different voltages. To produce a higher voltage signal, several thermocouples may be connected in series. Such an arrangement is called a thermopile. A multiple thermocouple installation can generate as much as 750 mV (millivolts), allowing it to operate special solenoids.

Thermocouples and thermopiles are used extensively as safety devices in gas furnaces to detect the pilot light flame. If a pilot light flame goes out, the thermocouple or thermopile will stop producing a voltage, which closes a valve that shuts off the gas supply to the furnace. Thermocouples are also commonly used to get accurate temperature measurements of pipes and controlled rooms where access is difficult.

Thermocouples and thermopiles vary by manufacturer and are often designed for use in a specific application. Certain electronic instruments have connections for thermocouple wires. This allows the thermocouple probe to be mounted directly to the area in question, and the temperature is displayed on the screen of the temperature-sensing instruments, **Figure 14-24**.

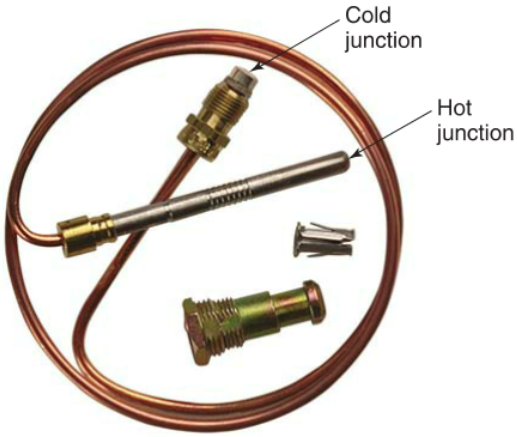

White-Rodgers Division, Emerson Climate Technologies

Figure 14-23. Thermocouples are used extensively in gas furnaces to turn off the gas supply if the pilot light flame goes out. The hot junction is placed near the pilot light flame, creating an electrical signal that keeps the gas valve open as long as the flame continues to stay on.

Pro Tip

Seebeck Effect

The ***Seebeck effect*** is the concept underlying the conversion of thermal energy into electrical power. Heat applied to the junction of two dissimilar metals (the hot junction of a thermocouple) creates a voltage called thermoelectricity.

The opposite of the Seebeck effect is the Peltier effect, which explains how electric current is used to transfer heat from one place to another. These concepts and thermoelectric refrigeration are covered in Chapter 48, *Special Refrigeration Systems and Applications*.

Goodheart-Willcox Publisher

Figure 14-24. A common application of thermocouples in instruments is as temperature clamp attachments for multimeters. These allow technicians to measure the temperature of tubing, such as liquid lines for subcooling and suction lines for superheat.

Copyright Goodheart-Willcox Co., Inc.

Chapter Review

Summary

- Adding impurities to a pure semiconductor material causes an excess or shortage of electrons in the semiconductor, creating N-type and P-type materials. Semiconductors conduct electricity through the movement and aligning of electrons and holes.
- A diode is a semiconductor device that allows electrons to flow in only one direction. A diode allows electrons to flow depending on the polarity of the connected power source.
- Control circuits use electrical and electronic devices to energize or de-energize a load in the power circuit. A sensor is a device that detects and responds to some kind of stimulus, such as temperature or pressure. A transducer is a device that converts an input signal from one form of energy to an output signal of another form of energy.
- A diac is an electronic device that allows current to pass in both directions. However, a minimum voltage is required to cause current to flow through a diac, and a minimum amount of current is needed to maintain a diac's conductivity.
- Both silicon-controlled rectifiers (SCRs) and triacs are three-terminal electronic switching devices. An SCR conducts current in only one direction, but a triac can conduct current in both directions. Both triacs and SCRs remain closed until a minimum voltage is applied across their anode and cathode terminals or an electrical signal is applied to their gate terminals.
- A transistor is a three-terminal semiconductor device used in electronic switching or signal amplification. Like SCRs and triacs, a transistor conducts current between its collector and emitter terminals when an electrical signal is passed through its middle terminal, called its base.
- A rectifier is an electronic circuit that converts alternating current to direct current. An inverter is the opposite of a rectifier. An inverter changes direct current into alternating current.
- A thermistor is a solid-state device that changes its resistance based on temperature. A negative temperature coefficient (NTC) thermistor decreases its resistance as temperature increases. A positive temperature coefficient (PTC) thermistor increases its resistance as temperature increases.
- A printed circuit board (PCB) provides electrical pathways for connecting electronic components. Microprocessors are semiconductor devices that can accept, store, and process various information for controlling a system according to a user's instructions.
- A switch is any device used to open or close any part of an electrical circuit by disconnecting and connecting contacts. Contacts are the physical parts of a switch or switching device that touch to complete an electrical circuit. Switches are either normally closed (NC) or normally open (NO).
- A relay is an electrical switch that is operated by an outside electrical signal. A solenoid is an electromagnetically operated device that pulls a plunger into its core when current passes through its windings. It is most often applied to valves, so they can be automatically opened or closed.
- A thermocouple is an electrical device that produces a voltage when its hot junction is heated. It is commonly used as a safety device in furnaces or as a measuring element in instruments.

Review Questions

Answer the following questions using information in this chapter.

1. Semiconductors conduct electricity through the movement of negatively charged electrons and positively charged _____.
   A. conductors
   B. holes
   C. insulators
   D. protons
2. Adding impurities, such as boron or phosphorous, to a pure semiconductor material to change its conduction traits is called _____.
   A. conducting
   B. hole flow
   C. relaying
   D. doping
3. A semiconductor material that has a surplus of electrons is referred to as a(n) _____ material.
   A. diode
   B. N-type
   C. P-type
   D. transistor

Copyright Goodheart-Willcox Co., Inc.

4. Electrons will only flow through a diode from the _____.
   A. cathode to the anode
   B. anode to the cathode
   C. emitter to the collector
   D. forward bias to the reverse bias
5. Which type of circuit uses electrical or electronic devices to control the flow of electric current, causing loads to be either energized or de-energized?
   A. Sensor
   B. Branch
   C. Series
   D. Control
6. Which device detects and responds to some kind of stimulus, such as temperature, pressure, or an electrical signal?
   A. Inverter
   B. Relay
   C. Amplifier
   D. Sensor
7. Which device converts an input signal from one form of energy to an output signal of another form of energy?
   A. Transducer
   B. Thermistor
   C. Transistor
   D. Relay
8. Which solid-state device allows electrons to flow in both directions?
   A. Silicon-controlled rectifier
   B. Diac
   C. Diode
   D. Rectifier
9. The minimum voltage required for current to flow through a diac is called the _____.
   A. holding voltage
   B. exceeding voltage
   C. breakover voltage
   D. diac voltage
10. Which three-terminal switching device only conducts current from cathode to anode?
    A. Silicon-controlled rectifier
    B. Diac
    C. Diode
    D. Triac
11. Which of the following methods *cannot* be used to turn off a silicon-controlled rectifier?
    A. Opening the gate circuit
    B. Decreasing the current below the holding current threshold
    C. Applying a reverse voltage to the cathode
    D. Opening a switch to cut off all current
12. Which three-terminal semiconductor device is used to either switch or amplify an electrical signal?
    A. NTC thermistor
    B. PTC thermistor
    C. Transistor
    D. Thermocouple
13. The middle layer of a transistor is called the _____.
    A. collector
    B. emitter
    C. rectifier
    D. base
14. A circuit that changes alternating current to direct current, but only produces a direct current output for one-half of the ac sine wave is a(n) _____ circuit.
    A. half-wave rectifier
    B. full-wave rectifier
    C. bridge rectifier
    D. inverter
15. An arrangement of four diodes in a circuit, which is called a _____, is used to produce a direct current output from both halves of a sine wave.
    A. half-wave rectifier
    B. bridge rectifier
    C. full-wave inverter
    D. half-wave inverter
16. An electronic circuit that changes direct current to alternating current is called a(n) _____.
    A. microprocessor
    B. rectifier
    C. inverter
    D. relay
17. Which of the following solid-state devices increases its resistance as temperature increases?
    A. NTC thermistor
    B. PTC thermistor
    C. Transistor
    D. Thermocouple

Copyright Goodheart-Willcox Co., Inc.

18. Which type of semiconductor device produces electrical energy when it absorbs light?
    A. Thermocouple
    B. Photoconductor
    C. Photovoltaic device
    D. Photoemissive device
19. The device that functions as the control center of a computer by accepting information, storing it, and reacting in a preset way is a(n) _____.
    A. microprocessor
    B. rectifier
    C. inverter
    D. relay
20. A _____ switch is one that must be actuated to provide power to a circuit.
    A. normally closed
    B. normally open
    C. closed contact
    D. normally reversed
21. Switches are arranged and operate based on their _____.
    A. anodes and cathodes
    B. hole flow and doping
    C. NTC and PTC
    D. poles and throws
22. An electrical switch that operates under the control of an outside electrical signal is a _____.
    A. relay
    B. solenoid
    C. microprocessor
    D. thermopile
23. When current passes through the coil of a relay, the movable armature moves toward the coil due to _____.
    A. vacuum
    B. reverse biasing
    C. hole flow
    D. electromagnetism
24. A solenoid is an electromagnetic device that is commonly used to _____.
    A. produce a voltage based on applied heat
    B. produce a voltage based on applied light
    C. accept, store, and respond to information
    D. operate valves
25. Which electrical device consists of a pair of two wires that are welded together to generate a voltage when heat is applied to the fastened end?
    A. NTC thermistor
    B. PTC thermistor
    C. Transistor
    D. Thermocouple

Copyright Goodheart-Willcox Co., Inc.

CHAPTER 15 Electric Motors

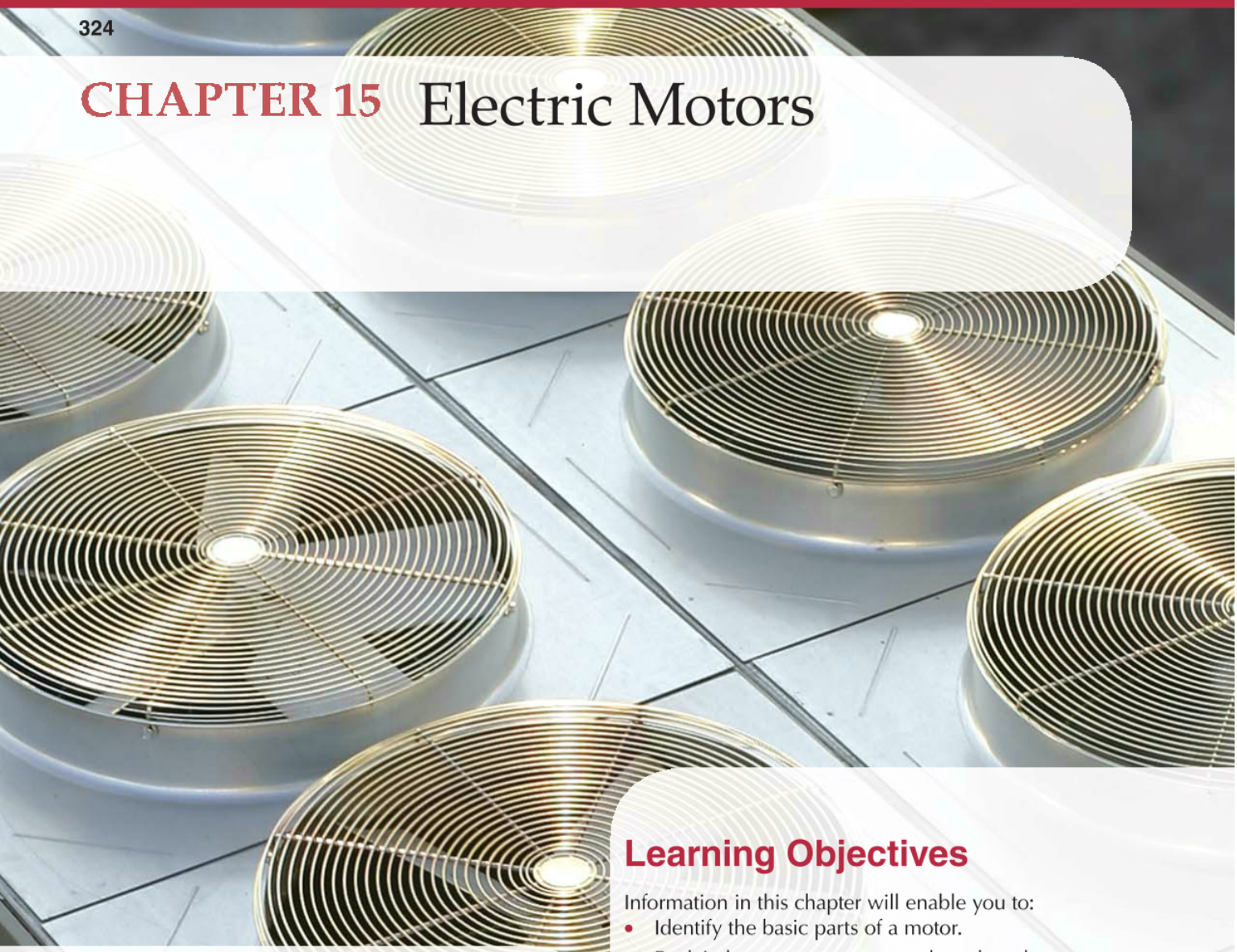

Learning Objectives

Information in this chapter will enable you to:

- Identify the basic parts of a motor.
- Explain how a motor operates based on the codependent relationship of magnetism and electricity.
- Calculate a motor's synchronous speed and explain how it is different than the motor's full-load speed.
- Compare how motor windings and capacitors are used to start single-phase motors.
- Summarize the different starting and running characteristics of various single-phase motors.
- Understand the structure and basic operation of a three-phase motor.
- Identify the differences between electronically commutated motors and ac motors.
- Select the proper motor for an application by analyzing standard motor data found on motor nameplates.
- Identify the different applications of motors in HVACR systems.

Chapter Outline

15.1 The Elementary Electric Motor
- 15.1.1 Motor Structure
- 15.1.2 Motor Operation Basics
- 15.1.3 Counter Electromotive Force
- 15.1.4 Motor Speed
- 15.1.5 Motor Efficiency

15.2 AC Induction Motors
- 15.2.1 Single-Phase Motors
- 15.2.2 Three-Phase Motors
- 15.2.3 Variable Frequency Drives (VFDs)

15.3 Electronically Commutated Motors (ECMs)

15.4 Standard Motor Data

15.5 Motor Applications in HVACR Systems
- 15.5.1 Compressor Motors
- 15.5.2 Fan Motors

Technical Terms

ac motor
built-up terminal
capacitor-start, capacitor-run (CSCR) motor
capacitor-start, induction-run (CSIR) motor
centrifugal switch
common terminal
continuous duty
counter electromotive force (cemf)
dual-voltage motor
electronically commutated motor (ECM)
end bell
field pole
field winding
full-load amperage (FLA)
induction motor
intermittent duty
locked rotor amperage (LRA)
motor nameplate
motor terminal box
permanent split capacitor (PSC) motor
phase splitting
rated full-load speed
rated voltage
rotor
run capacitor
run winding
running terminal
shaded-pole motor
single-phase motor
slip
split-phase motor
squirrel cage rotor
start capacitor
start winding
starting terminal
stator
synchronous speed
three-phase motor
torque
variable frequency drive (VFD)

Review of Key Concepts

Reviewing these concepts from earlier chapters will help you understand new concepts presented in this chapter:

- The process of generating electromotive force using a magnetic field is called induction. (Chapter 12)
- Just as a magnetic field can be used to induce electricity, electricity can be used to generate an electromagnetic field. (Chapter 12)
- Inductive reactance and capacitive reactance resist the flow of alternating current in a circuit, causing an alternating current and its voltage to cycle out of phase. (Chapter 13)
- Three-phase power has three separate voltage signals alternating in three separate phases. (Chapter 13)
- A variable frequency drive controls the speed of a motor by using inverter and rectifier circuits to change the frequency of the current supplied to the motor. (Chapter 14)

Introduction

Motors play a major part in HVACR systems. By converting electrical energy to mechanical energy, motors drive the compressor that compresses refrigerant, circulate hot and cold air around the evaporator and condenser, and perform many other essential tasks. Although most motors operate on similar principles, not all motors are identical. Because they are used in different applications, motors starting and running characteristics vary, along with the amounts of torque and speed they produce. Understanding how electric motors operate is essential for a technician to be able to troubleshoot a malfunctioning motor or replace a motor with the proper type. Understanding a motor's application within a system is key to properly diagnosing a problematic HVACR system.

Video

- Electric Motors

15.1 The Elementary Electric Motor

All motors operate based on the principles of electricity and magnetism. Variations in design and construction allow for a variety of motors, but all electric motors share two primary components: the rotor and the stator. All the other individual parts are extensions of these two primary components and support overall motor operation.

15.1.1 Motor Structure

All motors have a similar basic construction. The ***stator*** is the stationary part of a motor that is attached to the inside of the motor housing. The stator is sometimes called the frame. Parts of the stator also include field poles and field windings. ***Field poles*** are electromagnets whose polarities change as the flow of current alternates in the field windings. ***Field windings*** are the wires wrapped around the field poles of the stator. When current from a power source flows through the field windings, it creates a magnetic field around the field poles, **Figure 15-1**.

The ***rotor*** is the axle-mounted unit that rotates as the polarities of the stator's field poles change. The rotor, which can also be called the *armature*, is composed of coils of wire surrounding an iron core. Instead of coils of wire, rotors can also be made of metal bars mounted on an iron core. The bars connect at each end of the rotor to form a complete circuit. This type of rotor is called a ***squirrel cage rotor***, **Figure 15-2**.

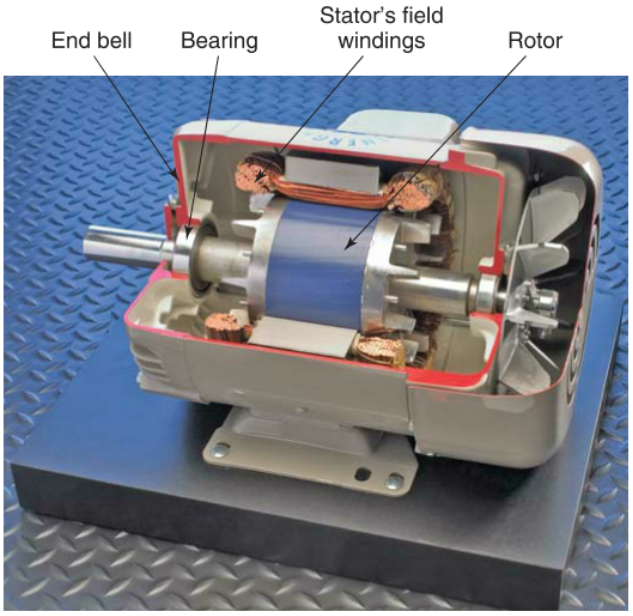

Photo courtesy of A. O. Smith

Figure 15-1. This cutaway view of an electric motor shows the motor's major internal parts.

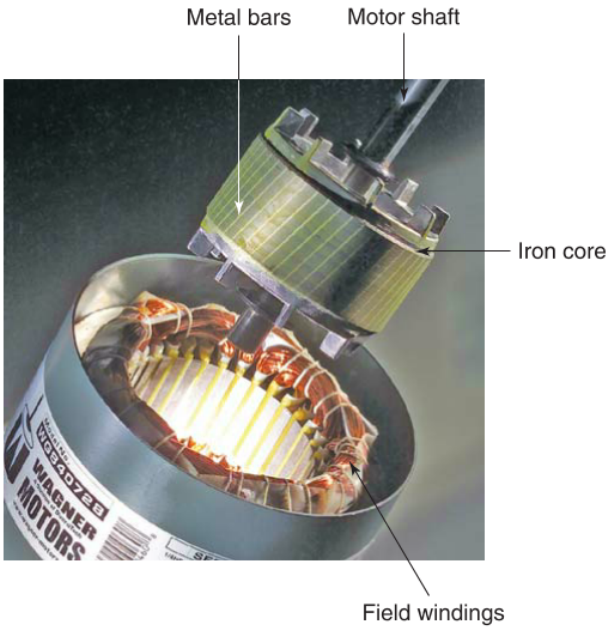

DiversiTech Corporation

Figure 15-2. A squirrel cage rotor is composed of metal bars surrounding an iron core. The metal bars are connected at each end to form a complete circuit.

The rotor is mounted on a motor shaft that has two bearings, one at each end. The bearings are accurately machined to provide the proper amount of endplay for the rotor. ***End bells***, or plates, close the openings at either end of the motor frame. The end bells hold the bearings. When the motor shaft is mounted in the bearings, the end bells support the rotor.

Pro Tip

Motor Terminology

Various terms are used for motor components. The rotor may be referred to as an armature. Field poles and field windings are often simply referred to as motor windings or stator windings. When speaking with customers, sales personnel, and others about specific parts, make sure that you understand each other correctly.

Mounted on the outside of the frame is the ***motor nameplate***, which displays essential motor information. Also mounted on the outside of the frame is the ***motor terminal box*** where electrical connections are made to control and power the motor, **Figure 15-3**.

15.1.2 Motor Operation Basics

Unlike the stator, the rotor is not connected to a power source. When current from a power source is

Copyright Goodheart-Willcox Co., Inc.

Milwaukee Electric Tool Corp.

Figure 15-3. An electrician using a voltage detector on a conductor in a motor terminal box.

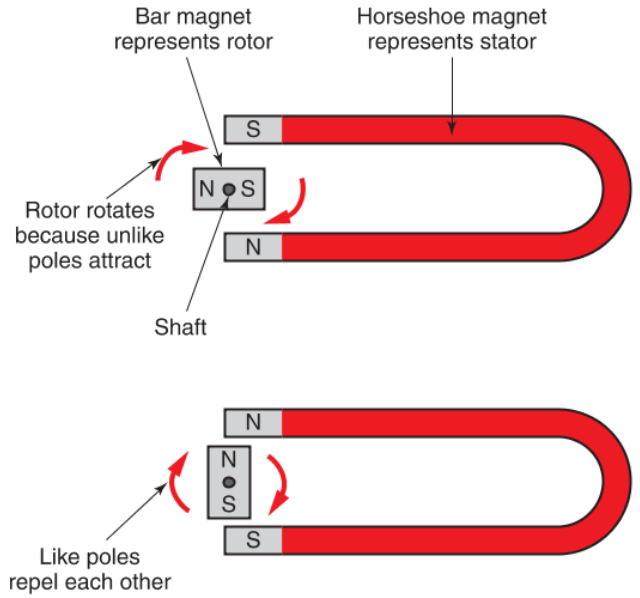

Goodheart-Willcox Publisher

Figure 15-4. When a bar magnet mounted on a shaft is put in the magnetic field of a horseshoe magnet, the bar turns till magnetically aligned because unlike poles attract each other and like poles repel each other.

applied to the field windings in the stator, it creates an electromagnetic field. This magnetic field induces current in the coils of wire or metal bars in the rotor. The current induced in the rotor also creates an electromagnetic field that interacts with the electromagnetic field created by the stator. The interaction between the magnetic fields of the stator and the rotor causes the rotor to rotate.

To better understand how a motor operates, picture a bar magnet centered on a shaft and a larger horseshoe magnet mounted in a fixed, stationary position around the bar magnet. The stationary horseshoe magnet represents the *stator*, and the bar magnet mounted on a shaft represents the *rotor*, **Figure 15-4**.

Because unlike poles attract each other, the rotor will rotate until its *S* pole is near the stator's *N* pole. This movement places the rotor's *N* pole near the stator's *S* pole. The rotor will stay in its current position with the stator until the polarity of the stator is reversed. When the polarity is reversed, the two *N* poles and *S* poles are near each other. Because like poles repel each other, the rotor will rotate another half turn to align magnetically with the stator again.

The stator's poles switch polarity because an alternating current is applied to the windings in the stator. The stator's poles switch as the alternating current switches directions. The magnetic field created by the current in the windings induces alternating current in the rotor. The alternating current flowing through the rotor generates its own magnetic field that has a polarity opposite of the polarity in the stator windings. As the polarities of the stator's poles change due to the flow of alternating current, the polarity of the rotor also changes. The attraction of unlike poles and repulsion of like poles causes the rotor to rotate as it tries to "catch up" to the changing magnetic polarities of the stator, **Figure 15-5**.

15.1.3 Counter Electromotive Force

In a running motor, the induced current flowing in the rotor generates a magnetic field. The rotor's magnetic field induces a voltage with a polarity opposite of the voltage applied to the stator. This oppositely polarized voltage is called ***counter electromotive force (cemf)***. Counter electromotive force opposes the flow of current in the rotor.

Counter emf depends on the speed of the rotor. The relationship among applied voltage, counter emf, and current tends to maintain the rotor at a constant speed. However, if a motor is slowed considerably by a heavy load, the current induced in the rotor increases greatly. Current flow increases because the rotor turns more slowly, which means counter emf and its

Copyright Goodheart-Willcox Co., Inc.

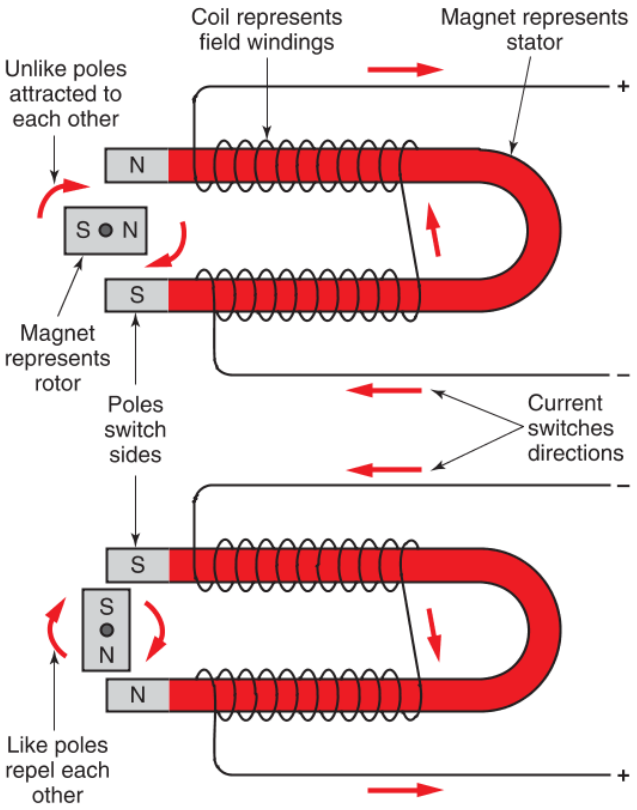

Goodheart-Willcox Publisher

Figure 15-5. The magnetic polarity in the field poles is reversed as the direction of the current alternates in the field windings. This causes the rotor to turn as the polarities of the field poles change.

resistance to current drops. With such high current, the motor will then overheat. Continuous operation with too great a load is likely to burn out a motor.

If the rotor is locked so it cannot turn and voltage is applied, current will be very high. A motor will quickly burn out when the rotor cannot turn or is locked. Locked rotors may occur due to a motor having to start under a heavy load or mechanical interference. Examples include motors connected to fans with worn bearings, which cause excessive strain on the motor, and compressors pumping against excessively high head pressure.

15.1.4 Motor Speed

The speed of an ac electric motor is determined by two variables:

- The alternating current's frequency (measured in Hz).
- Number of magnetic field poles in the stator.

Caution

Motor Frequency

Motors designed to operate on a certain frequency will only operate at that frequency. This is because the number of turns of wire required on the field poles is different for each frequency.

Synchronous Speed

Motor speed is initially calculated as synchronous speed. ***Synchronous speed*** refers to the speed of the rotating magnetic field in the stator. If the rotor rotates at the same speed as the stator's rotating magnetic field, then the motor runs at synchronous speed. To calculate a motor's synchronous speed (N_S) in revolutions per minute (RPM), use the following formula:

$$N_S = 120 \times \frac{f}{P}$$

f = frequency (Hz)
P = number of poles

Example:

What is the synchronous speed of a two-pole motor that operates at a frequency of 60 Hz?

Solution:

$$N_S = 120 \times \frac{f}{P}$$

$$N_S = 120 \times \frac{60}{2}$$

$$N_S = 120 \times 30$$

$$N_S = 3600 \text{ RPM}$$

The rotor in a two-pole motor rotates once with each cycle of alternating current (one half turn for each change of polarity), which means it turns 60 revolutions per second if the frequency is 60 Hz. Thus, a two-pole motor has a synchronous speed of 3600 RPM (60 revolutions × 60 seconds = 3600 RPM), **Figure 15-6**.

If four poles are used in the stator, a motor's synchronous speed is 1800 RPM. The rotor only turns one-half of a rotation for each cycle of alternating current. At a frequency of 60 Hz, the rotor completes 30 revolutions per second, which means it makes 1800 revolutions per minute (30 revolutions × 60 seconds = 1800 RPM). Most open-drive compressors and some hermetic compressors use four-pole motors, **Figure 15-7**.

Two-pole motors are about two-thirds the size of four-pole motors that have the same power. The number of poles used in a motor is dependent on the application. For example, a high-speed blower will use a two-pole motor, while a much slower condenser fan will likely use a four-pole motor. It is also possible to

Copyright Goodheart-Willcox Co., Inc.

build motors having six, eight, or more poles. Many direct-drive compressors use a six-pole motor that operates at 1200 RPM.

Rated Full-Load Speed

Because electric motors do not operate at exactly synchronous speed, they are not rated at synchronous speed. Instead, they are rated at their operating speed under a full load, which is called ***rated full-load speed***. The difference between synchronous speed and rated full-load speed is called ***slip***. **Figure 15-8** shows the operating speeds for two-, four-, and six-pole motors operating at different frequencies.

Under actual conditions, a 3600 RPM motor operates at approximately 3450 RPM. An 1800 RPM motor operates at approximately 1750 RPM. This reduction

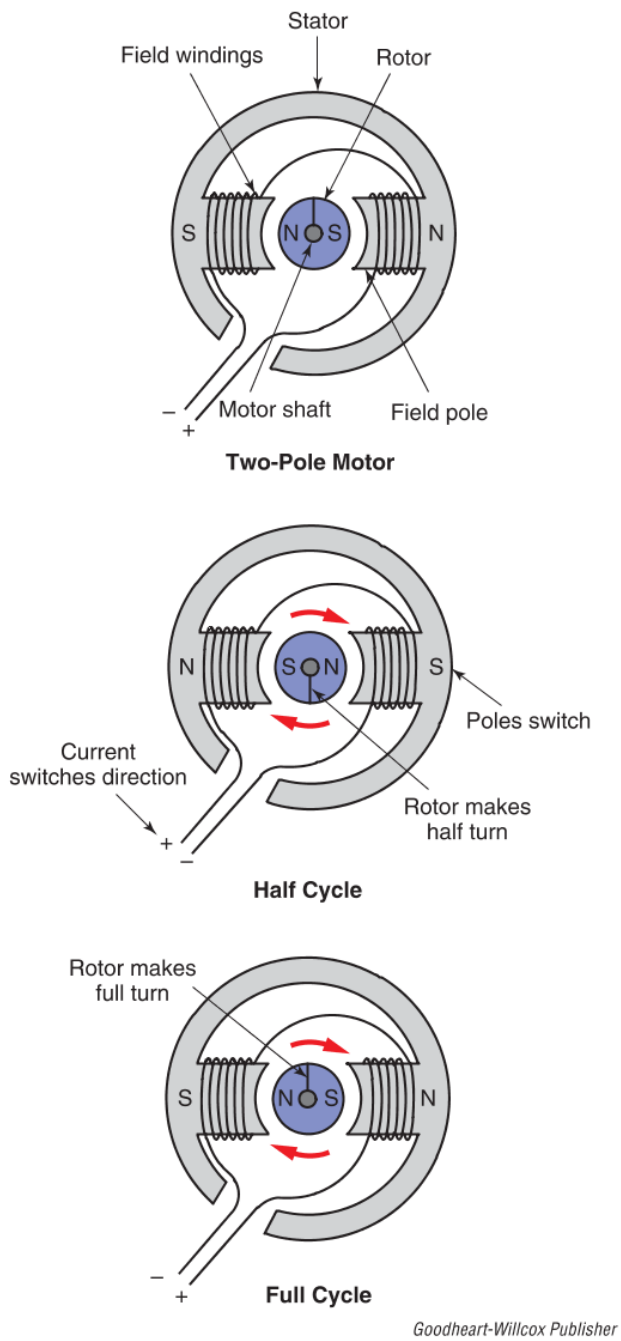

Figure 15-6. In a two-pole motor, the rotor completes one full turn with each cycle (Hertz) of alternating current.

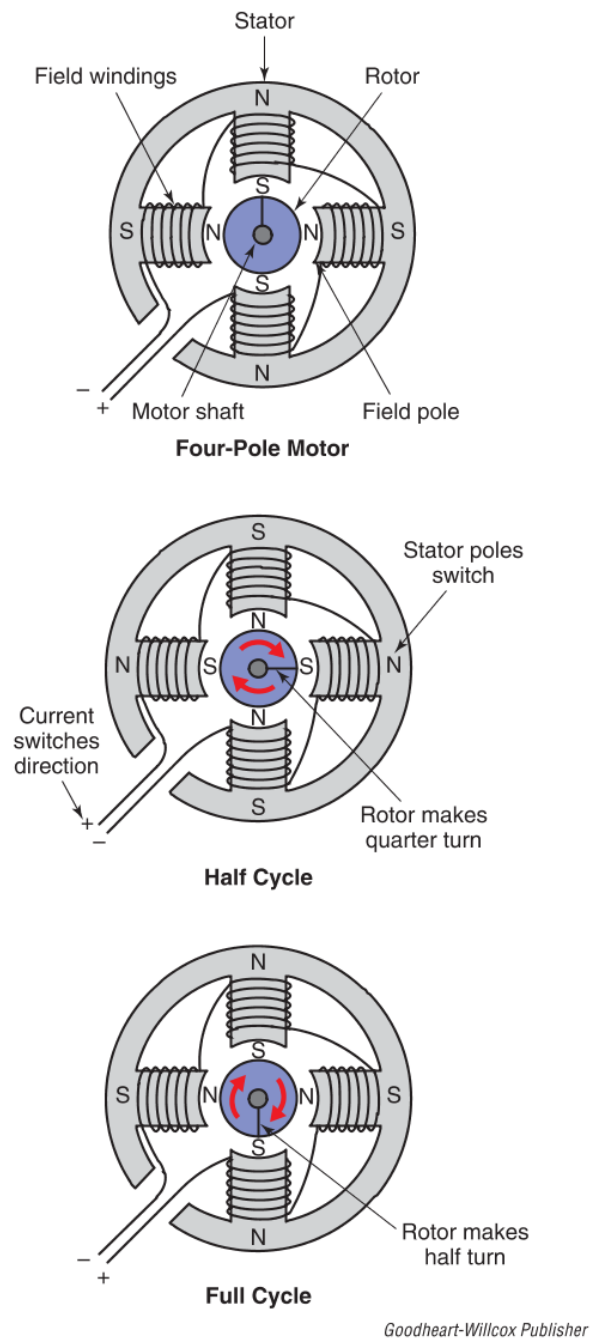

Figure 15-7. With a four-pole motor, the rotor makes only one-half of a rotation as alternating current completes one cycle.

Copyright Goodheart-Willcox Co., Inc.

Motor Speed				
Poles	60 Hz		50 Hz	
	Synchronous	Operational	Synchronous	Operational
2	3600 RPM	3450 RPM	3000 RPM	2850 RPM
4	1800 RPM	1750 RPM	1500 RPM	1450 RPM
6	1200 RPM	1150 RPM	1000 RPM	950 RPM

Goodheart-Willcox Publisher

Figure 15-8. Synchronous and operational speeds for two-, four-, and six-pole motors at 60 and 50 Hz. Note that operational speed is approximate.

in speed is due to the slight magnetic slippage, which varies depending on the load. Generally, motor slip is between 4% and 5% of synchronous speed.

15.1.5 Motor Efficiency

Motor efficiency is the mechanical energy produced by the motor shaft divided by the power input to the motor. Motors are not 100% efficient because of clearances, bearing friction, and imperfect windings. For a given voltage input, larger motors produce more mechanical energy at the shaft. While larger motors operating at a certain voltage may be up to 97% efficient, the efficiency of smaller motors at the same voltage is often only 50% to 60%.

15.2 AC Induction Motors

Alternating current is the most commonly used operating current for HVACR motors. An ***ac motor*** is a motor that runs on alternating current. An ac motor can be further classified as either an induction motor or a synchronous motor. ***Induction motors***, which are the type discussed earlier in this chapter, are ac motors that operate by using the magnetic field generated in the stator to induce current in the rotor.

Induction motors are categorized in a number of ways. Motors differ from each other by the amount of starting torque and running torque that they generate. ***Torque*** is the work performed by a twisting or turning action, such as a rotating motor shaft. Induction motors can also be differentiated by their required input power: single-phase, two-phase, three-phase, and four-phase. Many small ac motors are single-phase, while many of the larger ac motors are three-phase.

15.2.1 Single-Phase Motors

A ***single-phase motor*** is an ac motor that runs on a single phase of alternating current. Single-phase motors are used in many residential applications because the power supplied by utility companies to residential homes is single-phase power. Most single-phase motors are rated for 120 V, 208 V, or 240 V power. Many single-phase motors can run either clockwise or counterclockwise. For many of these motors, the rotation direction can be changed by reversing the connections to the start winding.

There are many different designs of single-phase motors. These motors differ based on the applications they are used in and the methods that are used to start and run them. The following single-phase motors are the most common, and each type is discussed in detail later in this chapter:

- Split-phase motor.
- Capacitor-start, induction-run (CSIR) motor.
- Capacitor-start, capacitor-run (CSCR) motor.
- Permanent split-capacitor (PSC) motor.
- Shaded-pole motor.

Start and Run Windings

Most single-phase induction motors have two types of stator windings: a start winding and a run winding. Remember that induction motors transfer electricity from the stator (start and run windings) to the rotor through induction, which is the same way a transformer transfers electricity between primary and secondary coils. Remember also that induction causes inductive reactance, which is the opposition to the flow of current that causes current to lag behind voltage in an ac cycle.

Run windings are stator windings that are energized during the entire operation of the motor. They provide the bulk of the magnetic force for driving the rotor. ***Start windings*** are stator windings that are used for motor starting and additional torque. For each run winding there is a start winding. Start winding coil is made of a smaller diameter wire and has more turns than a run winding coil, **Figure 15-9**.

Copyright Goodheart-Willcox Co., Inc.

The start winding may be of smaller diameter than the run winding because it is only energized for a short time and is not required to handle a continuous current as the run winding must do. Being made of a smaller gage wire, the start winding has a higher resistance than the running winding. Having more coil turns, the start winding will also have a higher inductance than the run winding.

Since the start and run windings have different inductance values, the current flowing through the start winding is out of phase with the current flowing through the run winding, **Figure 15-10**. This is called ***phase splitting***. Phase splitting is the means by which single-phase motors are started. The split phases create a rotating magnetic field in the stator, causing the rotor to start turning.

Most of the current in a single-phase induction motor is conducted through the run winding. When the motor is starting, however, current goes through both the start and run windings. When the motor reaches 60% to 75% of its rated full-load speed, the start winding circuit is opened by a centrifugal switch or a starting relay. See **Figure 15-11**. The motor then operates on the run winding only. If the start winding is left in the circuit, it may overheat.

Motor Capacitors

In some cases, single-phase induction motors use capacitors to create a much larger phase displacement to help start the motor. Capacitors cause capacitive reactance in a circuit, which is the opposition to the flow of current that causes voltage to lag behind current in an ac cycle. In a motor with both start and run windings, capacitors are added in series with the start winding.

When power is applied to the motor, electricity flows through the start and run windings. In the run winding, current lags behind voltage due to inductive reactance. In the start winding with a capacitor wired in series, voltage lags behind current due to capacitive reactance. This causes phase splitting, but with a much larger displacement between the phases than can be caused by just the start and run windings alone. A larger phase displacement leads to a higher starting torque, which means motors that use capacitors can start under heavier loads, **Figure 15-12**.

There are two types of capacitors used with ac motors: start capacitors and run capacitors. A capacitor used only during motor start-up to provide initial starting torque is called a ***start capacitor***. Start

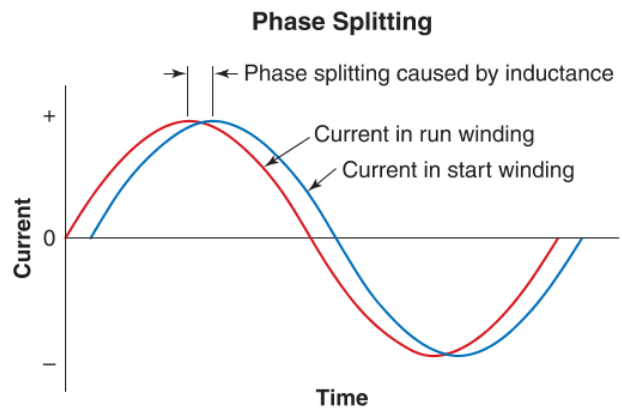

Goodheart-Willcox Publisher

Figure 15-10. Phase splitting occurs in a single-phase motor because the run winding has less inductance than the start winding so current flows through the run winding ahead of the start winding.

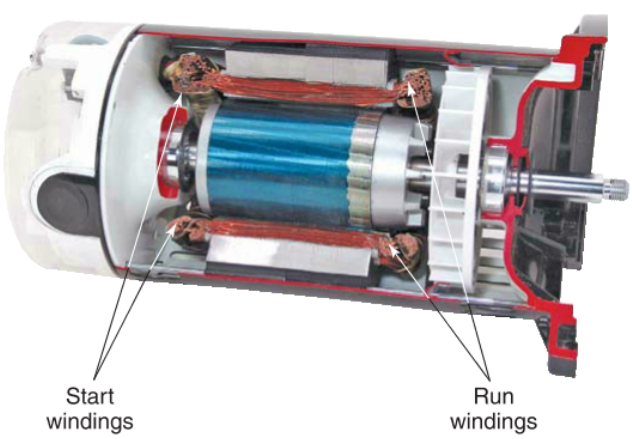

Photo courtesy of A. O. Smith

Figure 15-9. Start windings in a single-phase motor are made of smaller gage wire than run windings.

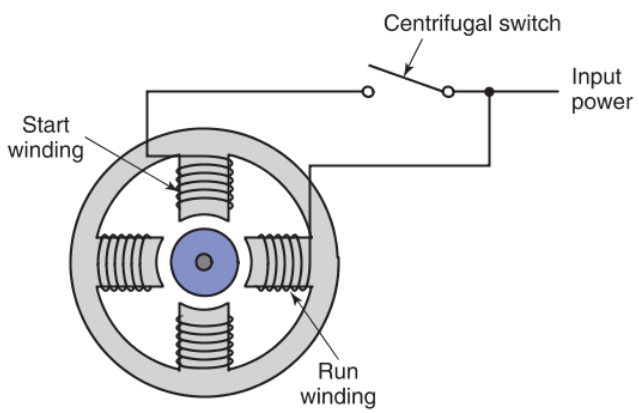

Goodheart-Willcox Publisher

Figure 15-11. A centrifugal switch is used to disconnect power to the start winding. The circuit for the run winding remains complete so power is still provided to the run winding.

Copyright Goodheart-Willcox Co., Inc.

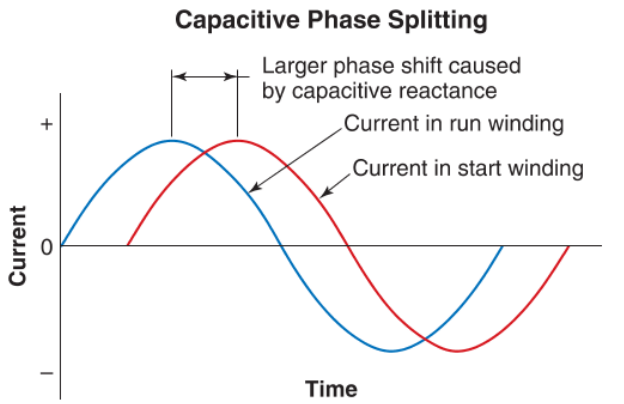

Goodheart-Willcox Publisher

Figure 15-12. With a capacitor wired in series with the start winding, current leads voltage due to capacitive reactance, while current lags voltage in the run winding due to inductive reactance. This causes a larger phase shift than in motors that do not have capacitors.

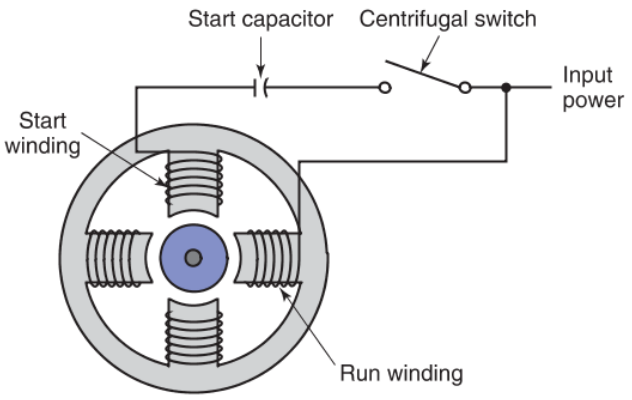

Goodheart-Willcox Publisher

Figure 15-13. A start capacitor is wired in series with the start winding and a centrifugal switch. The centrifugal switch disconnects both the start winding and the capacitor after the motor starts running.

capacitors are only used for a fraction of a second. A centrifugal switch or relay drops the start winding and start capacitor out of the motor circuit after the motor starts running, **Figure 15-13**. A start capacitor is never used in a stator's run winding circuit. Start capacitors are usually dry electrolytic capacitors. A typical start capacitor is shown in **Figure 15-14**.

Caution

Start Capacitor Duty

Start capacitors are built to specifications for cyclical duty. They are only meant to operate for short periods of time. If a start capacitor is left in a circuit too long (due to a faulty centrifugal switch or relay), it may damage the motor windings.

A ***run capacitor*** operates in the same way as a start capacitor, except it remains in the start winding circuit while the motor is running. It provides a signal that is out of phase for added torque during the motor's entire operation. Run capacitors are filled with oil and are designed to dissipate the heat generated by the high current used to run a motor, **Figure 15-15**.

Caution

Defective Run Capacitors

Be sure that any run capacitors you encounter on service calls are operating properly. Defective run capacitors can cause a motor to draw higher than normal current. This could trip the overload protection device or damage the motor.

DiversiTech Corporation

Figure 15-14. Start capacitors are used to increase a motor's starting torque.

Split-Phase Motors

A ***split-phase motor*** is a single-phase induction motor used in applications that operate in the fractional horsepower range. Small condensing units and fans that require up to 1/3 hp are often driven by split-phase motors. A split-phase motor uses the different inductance values of its start winding and run winding to produce phase splitting and achieve initial rotation. As a result, the starting torque is lower than motors that use capacitors, which means split-phase motors must be used on systems with an easily starting load. Split-phase motors are very popular in HVACR

Copyright Goodheart-Willcox Co., Inc.

Goodheart-Willcox Publisher

Figure 15-15. Run capacitors are used to increase a motor's running torque.

systems that use a capillary tube metering device. In these systems, low-side and high-side pressures balance when the system cycles off. Thus, the split-phase motor is not required to start the compressor under full-load conditions.

Pro Tip

Unloaders

Split-phase motors can also be used in systems with an electrical, mechanical, or hydraulic unloader. An unloader is a device that can be used to reduce a compressor's load on start-up or for capacity control. If a system is equipped with an unloader, a split-phase motor can be used regardless of the type of metering device in the system. Unloaders will be covered in greater depth in later chapters.

Split-phase motors are typically built using a squirrel cage rotor and are available in either 120 V or 240 V. A split-phase motor's start windings are disconnected by a centrifugal switch or relay when the motor reaches approximately 75% of its running speed. A ***centrifugal switch*** is an electrical device mounted on the end of a motor shaft that disconnects the start windings from the circuit. See **Figure 15-16**.

A centrifugal switch consists of weights that are held close to the motor shaft by the force of a spring. These weights hold a plate against a set of electrical contacts to keep them closed. As the motor shaft approaches its running speed, the weights overcome the spring's force and move away from the shaft due to centrifugal force. This pulls the plate away from the electrical contacts and opens the circuit.

Capacitor-Start, Induction-Run Motors

A ***capacitor-start, induction-run (CSIR) motor*** is a single-phase induction motor that has a start capacitor wired in series with the start winding. The start capacitor puts the current in the start winding out of phase with the current in the run winding. The electromagnetic flux of the two out-of-phase windings provides very high starting torque. The capacitor is usually placed on top of the motor in a metal or plastic cylinder, **Figure 15-17**.

During start-up, current passes through both the start winding and the run winding. At about 75% of the motor's rated speed, a centrifugal switch or a relay in series with the start winding opens. This disconnects the start winding and start capacitor. The motor continues to run as an induction motor using only the run winding. Capacitor-start, induction-run motors

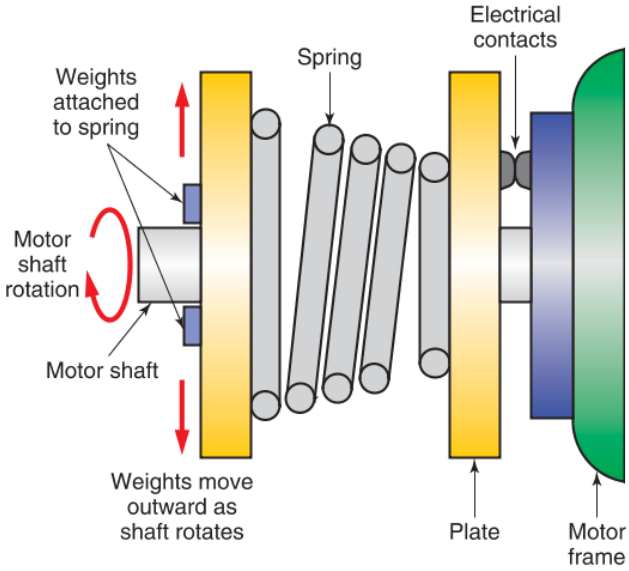

Goodheart-Willcox Publisher

Figure 15-16. A centrifugal switch is mounted on the end of a motor shaft. As the shaft approaches its full rotational speed, the weights on the switch move outward, pulling the spring and disconnecting the start windings from the motor circuit.

Copyright Goodheart-Willcox Co., Inc.

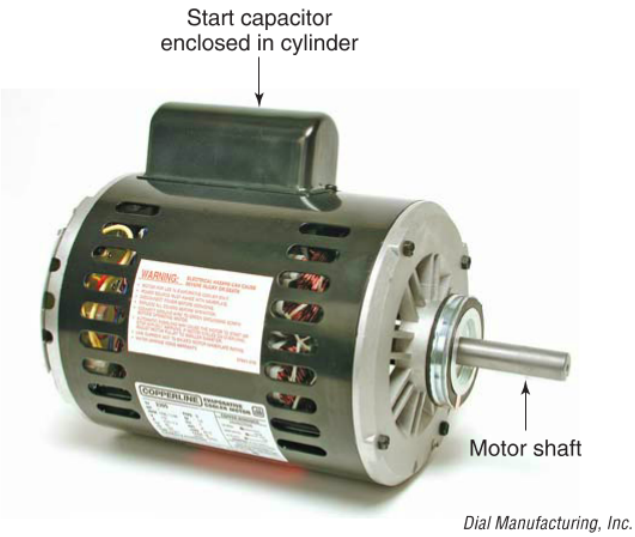

Dial Manufacturing, Inc.

Figure 15-17. The start capacitor is located in the housing on top of this capacitor-start, induction-run motor.

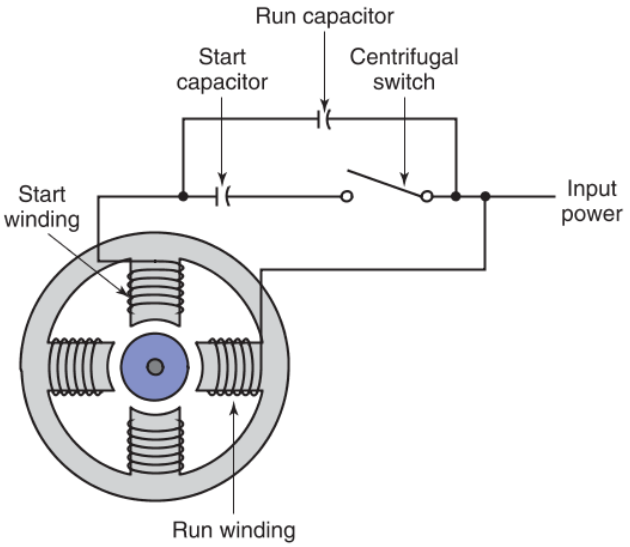

Goodheart-Willcox Publisher

Figure 15-18. All the capacitors in a capacitor-start, capacitor-run motor are in the start winding circuit. The run capacitor, however, is wired in parallel with the start capacitor and centrifugal switch so it is not disconnected when the centrifugal switch opens.

are available in either 120 V or 240 V and can produce up to 3 hp. CSIR motors are commonly used in hermetic compressors for refrigeration units.

Capacitor-Start, Capacitor-Run Motors

A ***capacitor-start, capacitor-run (CSCR) motor*** is a single-phase induction motor that has a start capacitor and a run capacitor wired in series with the start winding, but the run capacitor is wired in parallel with the start capacitor, **Figure 15-18**.

Capacitor-start, capacitor-run motors use at least two capacitors. However, more can be used depending on capacity and motor characteristic ratings. All capacitors are in the start winding circuit, but only the start capacitor is controlled by a centrifugal switch or relay.

When a CSCR motor starts, alternating current flows through the whole stator circuit, which includes the run winding, the start winding, the start capacitor, and the run capacitor. The current through the run winding is out of phase with the current in the start winding due to the start and run capacitors. This produces a high starting torque.

Pro Tip

Single-Phase or Two-Phase

Although phase splitting produces two separate ac sine waves that are out of phase with each other, CSIR and CSCR motors are still considered to be single-phase motors because they run on a single-phase power supply. It is only within the motor circuit that the alternating current splits into two phases due to the capacitors.

After a capacitor-start, capacitor-run motor reaches 60% to 75% of its rated speed, a centrifugal switch or relay opens the circuit between the start capacitor and the start winding. This drops the start capacitor out of the circuit, but leaves the run capacitor in. A phase difference continues to exist between the run winding and the start winding as the rotor continues to spin. As a result, a run capacitor improves a motor's power factor, making CSCR motors very efficient.

Capacitor-start, capacitor-run motors have enough starting torque to start heavy loads. They generally come in 1/6 hp and larger and are often used in large hermetic compressors in commercial systems and on belt-driven blowers.

Permanent Split Capacitor Motors

A ***permanent split capacitor (PSC) motor*** is a single-phase induction motor that uses a single run capacitor in series with the start winding for the motor's entire operation. It does not use a centrifugal switch or relay to switch off any capacitors or windings. Current flows through the run winding, the start winding, and the run capacitor during the motor's entire operation, **Figure 15-19**.

There is no difference between a permanent split capacitor motor's starting and running modes. It operates the same way as a CSCR motor operates in its running mode. However, PSC motors often have multiple

Copyright Goodheart-Willcox Co., Inc.

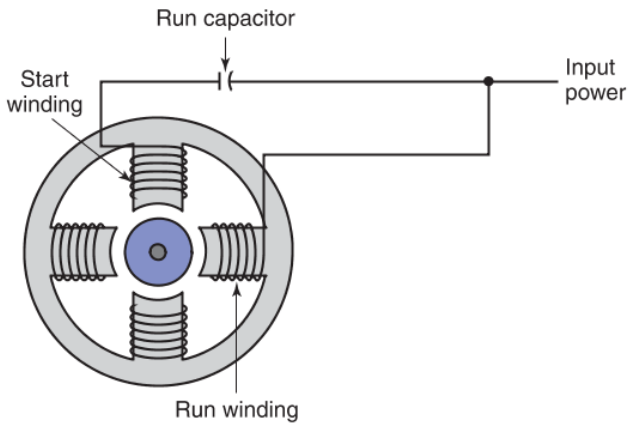

Goodheart-Willcox Publisher

Figure 15-19. In a permanent split capacitor (PSC) motor, current flows through the start winding and run capacitor throughout the motor's entire operation.

wire connections because they are capable of multiple speeds, **Figure 15-20**.

The additional wires connect at different points in the run winding. To change the speed of a motor, switch the wire connections to the motor circuit. The shorter the winding is that the current must pass through, the faster the motor speed. More winding means less speed. Fewer windings means more speed.

Permanent split capacitor motors are sensitive to changes in applied voltage because they do not have a start capacitor. A 5% to 10% drop in applied voltage will cause starting difficulty and overheating. To prevent damage, a thermal overload protector is used to open the circuit. Though PSC motors are very efficient, they have low starting torque. Thus, if a PSC motor tries to start a compressor when a system's low-side and high-side pressures are not balanced, the motor will overheat. PSC motor applications are limited to easily started loads and low-horsepower applications. Operating voltages are either 120 V or 240 V. PSC motors are commonly used in blowers and fans where variable speeds are desirable.

Shaded-Pole Motors

A ***shaded-pole motor*** is a low-torque, single-phase motor that uses shaded field poles, instead of a start winding, to produce starting torque. Its construction is different than the other motors previously described. Each stator field pole has one-third of its pole surface split off from the rest of the pole and wrapped with a copper band or copper wire. These copper-wrapped areas are the shaded poles of the motor. Each copper band generates its own magnetic field that combines with and competes against the magnetic field produced by the rest of the pole, **Figure 15-21**.

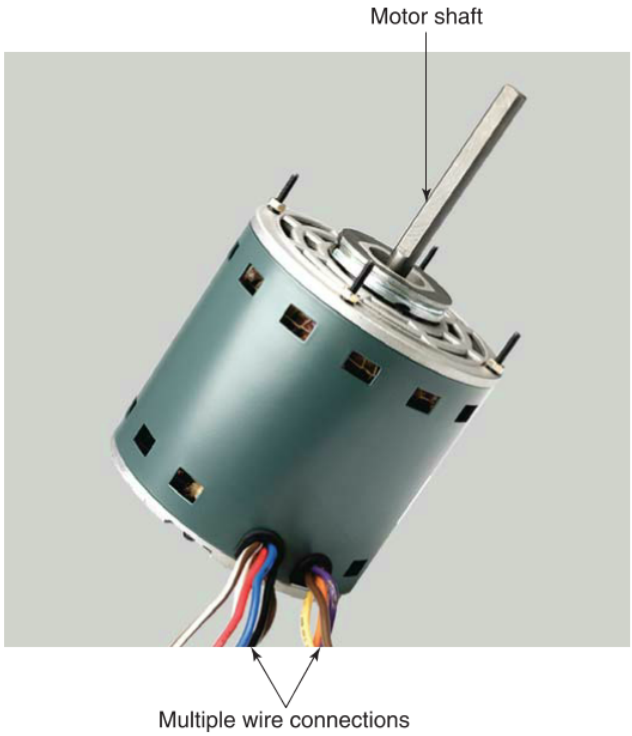

DiversiTech Corporation

Figure 15-20. This PSC motor is capable of producing more than one speed, which is done by switching the wire connections to the motor winding.

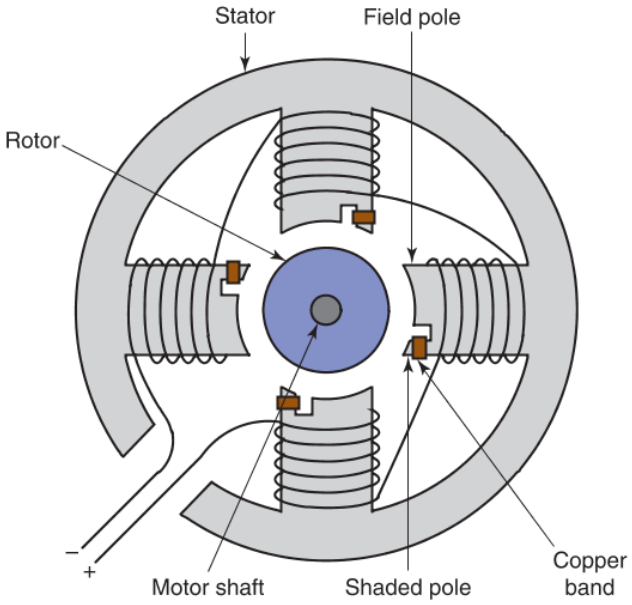

Goodheart-Willcox Publisher

Figure 15-21. A shaded-pole motor has field poles that are split. One part of each field pole is shaded, which means it is wrapped in a copper band.

Copyright Goodheart-Willcox Co., Inc.

As the voltage level of the alternating current in the field windings moves farther from 0 V, it generates an increasing electromagnetic field in the center of each field pole. This electromagnetism induces a current in the copper band on the shaded pole. As the field winding voltage decreases, current induced in the copper band generates an increasing electromagnetic field in the center of the shaded area. In this way, the electromagnetism of each field pole shifts from the center area of the pole to the shaded area of the pole. This shifting magnetic field creates an effect similar to phase splitting, causing the rotor to start rotating, **Figure 15-22**.

Shaded-pole motors have less starting torque than other types of motors. Nevertheless, the shaded-pole motor is a popular small motor, especially for small fans. Shaded-pole motors are available from 1/100 hp to 1/6 hp. **Figure 15-23** shows a shaded-pole motor.

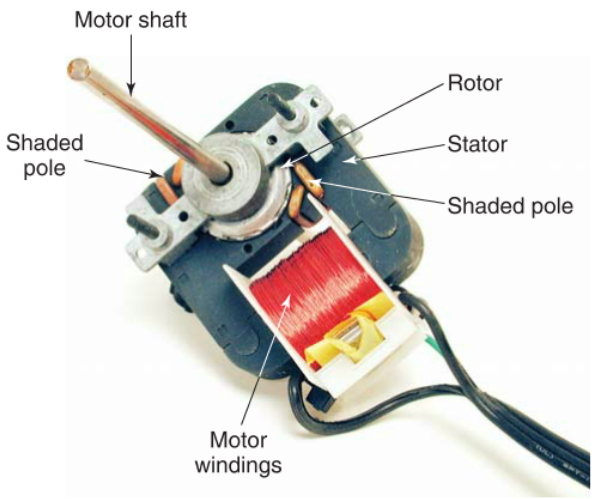

Dial Manufacturing, Inc.

Figure 15-23. A shaded-pole motor showing the copper bands that form each shaded pole.

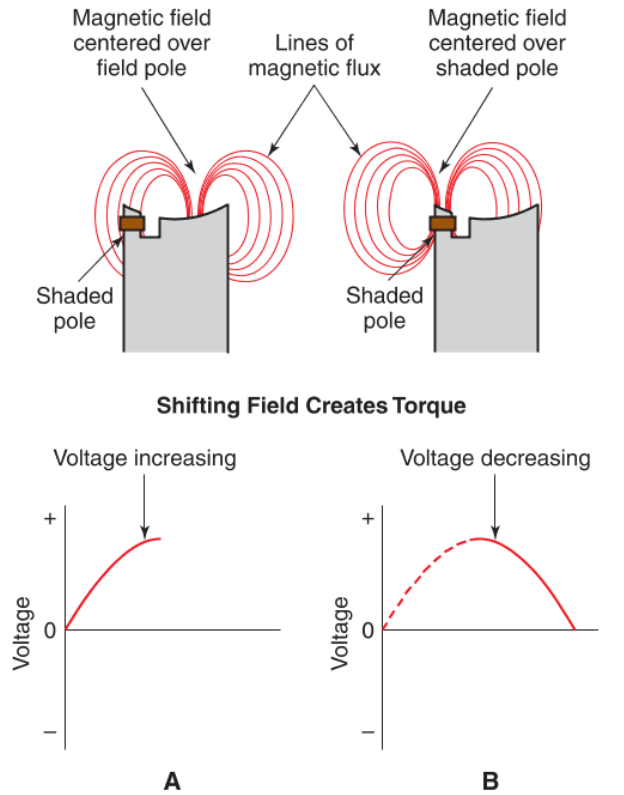

Goodheart-Willcox Publisher

Figure 15-22. The shifting magnetic field in a shaded-pole motor is what causes the rotor to start turning. A—As the voltage in the winding increases, the electromagnetic field it generates is concentrated over the center of the field pole. B—As the voltage in the winding decreases, the copper band generates an electromagnetic field that is centered over the shaded pole.

15.2.2 Three-Phase Motors

A ***three-phase motor*** is an induction motor that has three sets of stator windings energized by a three-phase power signal. In many cases, each set has two windings. Each set of windings is connected to one phase of the three-phase power source. This is comparable to having three single-phase power supplies for each set of stator windings, **Figure 15-24**.

The phases of a three-phase power supply are already out of phase, or split, with each other. Within the time of one cycle, the three separate current signals reach peak voltage at separate times. As a result, a three-phase motor generates the necessary torque from its rotating magnetic field in the stator without requiring capacitors or start windings to create phase splitting.

Three-phase motors are commonly dual-voltage motors. A ***dual-voltage motor*** is a motor that has its stator windings arranged in pairs so that it can be used with two different voltages. Some single-phase motors can also function as dual-voltage motors, depending on how the stator windings are arranged. Typically, a three-phase motor can be used with a 240 V or a 480 V power supply. The three sets of windings in a three-phase motor are wired either in series for high voltage or in parallel for low voltage. A motor operating on a higher voltage draws less current and is more efficient to operate.

Like other three-phase devices, such as three-phase transformers, three-phase motors can be wired in either a delta (Δ) or a wye (Y) configuration, **Figure 15-25**. In both of these configurations, the windings in the motor

Copyright Goodheart-Willcox Co., Inc.

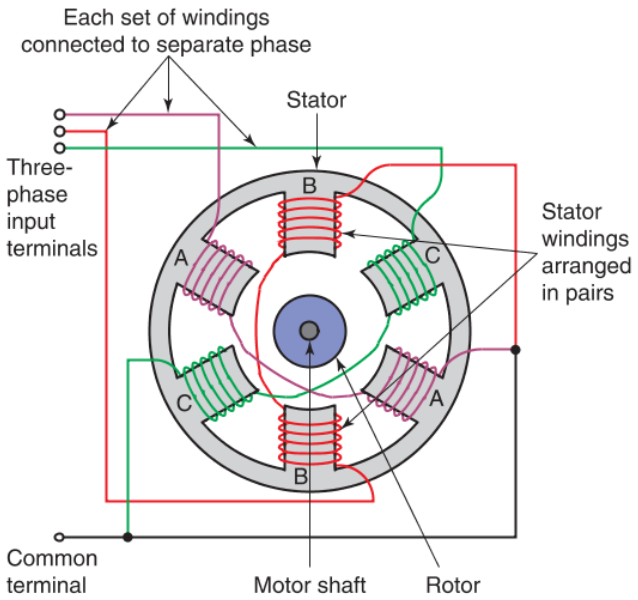

Goodheart-Willcox Publisher

Figure 15-24. A three-phase motor has stator windings that are connected in pairs. Each pair is supplied its own single phase of alternating current from the three-phase power source.

are connected to nine terminals in the motor terminal box, **Figure 15-26**.

Using jumper wires in the terminal box, a technician can wire a three-phase motor in series to use a 480 V power supply or in parallel for a 240 V power supply, depending on the electrical service available. All other connections are internal and cannot be accessed or changed.

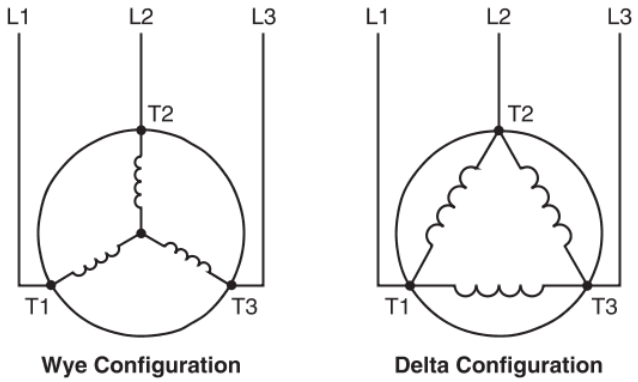

Goodheart-Willcox Publisher

Figure 15-25. Three-phase motors are manufactured in either a delta (Δ) or wye (*Y*) configuration. The terminals (T1, T2, T3) are connected to power leads (L1, L2, L3) to supply each set of windings with one phase of the three-phase power supply.

Emerson Climate Technologies

Figure 15-26. Motor terminals can be accessed in the motor terminal box.

6

Safety Note

Three-Phase Voltage

The high voltages of three-phase power are very dangerous. Before beginning service to a three-phase motor, be sure to disconnect the power and secure the power switch in the open position using a lock.

Reversing the Rotation of a Three-Phase Motor

To reverse the direction of rotation of a three-phase motor, follow these steps:

1. Turn off power to the motor.
2. To be safe, take a few readings across the motor terminals with a voltmeter to ensure that power is turned off.
3. Disconnect any two power leads from their terminals.
4. Connect each power lead to the other power lead's terminal.

Three-phase motors are generally more efficient than single-phase motors. Three-phase motor sizes range from 1 hp upward. They are often used for high-torque applications because single-phase motors are not commonly used above 1 hp. Three-phase power is available in most industrial and some commercial buildings. It is rarely supplied to homes. In HVACR, three-phase motors are mostly found in commercial and industrial compressors, such as large hermetic compressors.

Copyright Goodheart-Willcox Co., Inc.

15.2.3 Variable Frequency Drives (VFDs)

Generally all ac induction motors (single-phase and three-phase) are designed to operate at 100% full speed all the time. They are either fully on or fully off. When on, they pull full load current. This is regardless of whether operating at full speed is required for the system's capacity based on ambient temperature and other variables. Over time, this can cause premature wear and tear from stopping and starting more than necessary, and it can also waste energy and the money needed to pay for that wasted electrical power. The solution is to control the motor to operate at the ideal level based on the system's needs at that specific time.

An ac motor's speed is determined by the number of turns in the stator winding, the applied voltage, and frequency. The most common type of speed control is done by changing the number of stator poles. This is done by switching the wiring to the stator windings for speed control. However, the number of available speeds is limited based on the number of stators in the motor. Most often this is only two different speeds, low and high. The other option is speed control by changing the frequency of the motor's electrical signal. Control circuits that modify the frequency of signals to ac motors are called variable frequency drives.

Typical ac motors take a standard 60 Hz incoming signal. A ***variable frequency drive (VFD)*** uses a rectifier circuit to convert applied ac voltage to dc. It then uses an inverter with solid-state switching circuitry to convert the dc signal back into an ac sine wave that oscillates at the desired frequency, **Figure 15-27**.

Standard motors are usually limited to only a few speed settings based on stator windings. Unlike stator winding speed control, using a variable frequency drive allows the motor to be run at nearly any speed along a continuous scale. A VFD can control a motor's torque, acceleration, and deceleration. This allows for more efficient operation of an HVACR system. Controllers can be programmed to operate motors at specific speeds, depending on the application. VFDs provide motor operation at the precise time and speed to optimize system efficiency. Variable frequency drives are used to control blowers and also some compressors, **Figure 15-28**.

with permission from Carel Industries - all right reserved

Figure 15-27. A variable frequency drive rectifies a standard 60 Hz ac signal and inverts it into an ac signal at the desired frequency for speed control.

15.3 Electronically Commutated Motors (ECMs)

An ***electronically commutated motor (ECM)*** is a programmable, brushless dc motor that uses an electronic control module to control voltage to the stator windings. An ECM is the combination of a brushless dc motor and its electronic control module, **Figure 15-29**.

An ECM's rotor is made of permanent magnets instead of coils of wire or metal bars. No power is applied to the rotor, and no voltage is induced in the rotor. With no need to energize the rotor, ECMs do not have a commutator or brushes, as are found in standard dc motors.

The stator in an ECM usually consists of three coils of wire, like in a three-phase motor. An ECM's controller produces precise signals that energize the stator windings in sequence, much like a three-phase motor. This produces a rotating magnetic field. Torque is the result of the rotor's permanent magnets reacting with the rotating electromagnetic field generated by the stator windings. An ECM's controller is usually supplied with standard 120 V or 240 V ac power and additional control inputs based on different system variables and measurements.

Electronically commutated motors are versatile because they can be programmed. ECMs powering fans can be set to maintain a constant airflow that will adjust the speed of the motor to account for partially closed dampers, airway obstructions, or higher than normal external static pressure (ESP). Both speed and

Copyright Goodheart-Willcox Co., Inc.

NexRev Inc.; Danfoss

Figure 15-28. An efficiency upgrade to a commercial rooftop unit (RTU) is to install a VFD in the blower section. By matching fan speed to the cooling load required for a given period of time, a variable frequency drive controls a system to perform its job while consuming less energy. This same technology can be used to control the amount of refrigerant pumped by a compressor.

torque characteristics can be set for an ECM's specific application in an HVACR system.

Advantages of ECMs include variable speed, compact design, efficient performance, and durability. They are free of the normal maintenance associated with dc motors, such as brush replacement due to wear. They can also outperform several types of ac motors.

ECMs usually operate quietly. If there are any loud noises other than at start-up, it may indicate a problem. ECMs can be soft started, so that the motor

Emerson Climate Technologies

Figure 15-29. An electronically commutated motor (ECM) can generally be visually identified by its control module with a wiring receptacle having multiple wires.

begins slowly and ramps up to full speed. This places less stress on the fan and other mechanical parts than is exerted by a PSC motor, which begins operation at full speed.

15.4 Standard Motor Data

When selecting a motor for a certain purpose, knowing the motor's specifications is necessary for selecting the right motor. Motor specifications can be found on a motor's nameplate, **Figure 15-30.**

Code Alert

NEC Motor Nameplates

The NEC requires a minimum amount of information to be provided by a motor's manufacturer. Additional information may also be included, but the following data is required by the National Electrical Code (NEC) to be on motor nameplates.

- ***Rated voltage.*** This is the voltage level (or levels for dual-voltage motors) where the motor will perform at its best. Rated voltage is sometimes called *nameplate voltage.*

Copyright Goodheart-Willcox Co., Inc.

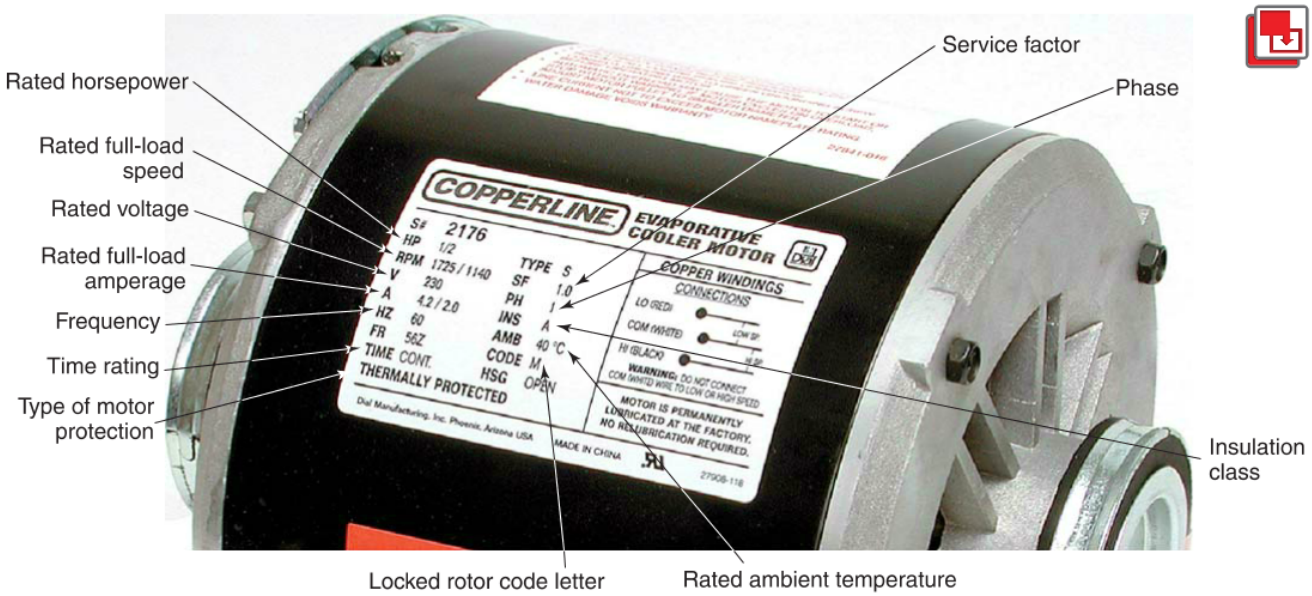

Dial Manufacturing, Inc.

Figure 15-30. The NEC requires motor manufacturers to include certain motor specifications on the motor nameplate.

Caution

Motor Voltage

The sizes of conductors used in electrical systems are very important. If a conductor is too small or too long, it may heat up enough to deteriorate its insulation and cause an electrical short or a fire. Excessively long conductors add resistance, which can cause an unintentional voltage drop. The voltage to the motor should not be less than 90% of the rated voltage. If it is less, there is danger of the motor overheating and becoming ruined.

- Manufacturer's name. This usually also includes the address and other information that is useful for ordering replacement parts or requesting additional equipment information.
- Rated volts. This is the recommended voltage to supply to the motor.
- ***Full-load amperage (FLA).*** This is the current level at which the full-load torque and horsepower are reached. This information is necessary to consider when selecting the wire size, the type of motor starter, and any overload protection for a motor.
- Frequency (Hz). The motor's frequency must match the frequency of the supplied power. In North America, the frequency is almost always 60 Hz.
- Phase. In most cases in North America, the supplied power is either single-phase or three-phase. A motor must match the phase type of the supplied power.
- Rated full-load speed (RPM). This is the motor's speed under a full-load when both the rated voltage and frequency are supplied.
- Rated horsepower (hp). This value indicates the amount of mechanical work that a motor can perform based on both motor speed and torque.

Pro Tip

Motor Horsepower

One horsepower is equal to lifting 33,000 ft-lb per minute or 550 ft-lb per second. At 100% efficiency, 746 W of electrical power equals one horsepower (hp). Refrigeration motors can range from 1/100 hp to several hundred hp. When a load requires a horsepower value between two standard horsepower ratings, choose a motor with the higher horsepower value.

- Insulation class. Insulation class refers to the maximum temperature that the insulation on the wires of the motor windings can withstand before breaking down. **Figure 15-31** lists the different insulation classifications and their corresponding maximum temperatures.
- Rated ambient temperature. This is the maximum ambient temperature at which the motor can operate.

Copyright Goodheart-Willcox Co., Inc.

Insulation Temperature Classifications		
Class	Maximum Temperature	
	°F	°C
A	221	105
B	266	130
F	311	155
H	356	180

Goodheart-Willcox Publisher

Figure 15-31. A motor's insulation class identifies the maximum temperature that the insulation on the motor windings can withstand.

- Time rating. Motors are classified as either continuous duty or intermittent duty. The NEC defines ***continuous duty*** as "operation at a substantially constant load for an indefinitely long time." The NEC defines ***intermittent duty*** as "operation for alternate intervals of (1) load and no load; or (2) load and rest; or (3) load, no load, and rest." Intermittent duty motors do not have to operate continuously and have ratings for how long they can safely run with a full load within 9°F (5°C) of their rated ambient temperature. These ratings are 5, 15, 30, or 60 minutes.

Thinking Green

Motor Duty Rating

For applications that do not require continuous duty, an intermittent duty motor can be used. In general, intermittent duty motors are substantially more economical than continuous duty motors. Examples of intermittent duty motors are condensate pumps and actuator motors that do not run continuously.

- Locked rotor code letter. This letter indicates a motor's ***locked rotor amperage (LRA)***, which is the current that the motor draws as power is first applied to start turning the rotor. Typically, the locked rotor amperage is between two and six times the full-load amperage. **Figure 15-32** shows the assigned value ranges for each letter according to the NEC's Table 430.7(B).

Caution

Locked Rotor Current

It is important to select motors with the correct locked rotor code letter. The high initial current draw of locked rotor amperage can cause a voltage dip that can damage voltage-sensitive equipment on the same circuit.

Locked Rotor Code Letters			
Code Letter	kVA/hp with Locked Rotor	Code Letter	kVA/hp with Locked Rotor
A	0–3.14	L	9.0–9.99
B	3.15–3.54	M	10.0–11.19
C	3.55–3.99	N	11.2–12.49
D	4.0–4.49	P	12.5–13.99
E	4.5–4.99	R	14.0–15.99
F	5.0–5.59	S	16.0–17.99
G	5.6–6.29	T	18.0–19.99
H	6.3–7.09	U	20.0–22.39
J	7.1–7.99	V	22.4 and up
K	8.0–8.99		

Goodheart-Willcox Publisher

Figure 15-32. Locked rotor code letters indicate a motor's locked rotor amperage in terms of the power the motor draws on start-up, which is expressed in kilovolt-amperes per horsepower.

6

- NEMA design letter. Due to the wide variety of applications, motor performance specifications vary. The National Electrical Manufacturer's Association (NEMA) uses a letter designation that classifies motors based on their locked rotor amperage, torque, and slip. This allows technicians to compare motors made by different manufacturers on an equal basis.
- Inherent motor protection. Some motors are manufactured with built-in protection. If a motor has this, it must state which type of protection on its nameplate. The two most prominent forms of protection are *thermally protected* and *impedance protected*.
- Condensation prevention heater specifications. If a motor has a condensation prevention heater, its nameplate must include the heater's rated voltage, number of phases, and its rated power in watts.

Manufacturers may also include the following additional information on nameplates:

- Service factor. This indicates the overload capacity, or overload horsepower, at which a motor can operate without overheating or being damaged. Multiply the motor's horsepower by the service factor number to determine the motor's overload horsepower.
- Frame size. This letter and number designation refers to the physical dimensions of the motor.

Copyright Goodheart-Willcox Co., Inc.

Premium Efficiency Levels for Electric Motors			
Horsepower	Two-Pole Motor	Four-Pole Motor	Six-Pole Motor
1	77.0%	85.5%	82.5%
1.5	84.0%	86.5%	86.5%
2	85.5%	86.5%	87.5%
3	85.5%	89.5%	88.5%
5	86.5%	89.5%	89.5%

Goodheart-Willcox Publisher

Figure 15-33. This chart shows the full-load efficiency requirements that a motor must meet in order to be certified as a NEMA Premium® motor.

- Full-load efficiency. This percentage represents how efficiently a motor converts electrical power into mechanical power. A motor with a rating of 100% would have no power loss. The higher the percentage is, the more efficient the motor.
- Guaranteed minimum efficiency. The guaranteed minimum efficiency represents the lowest efficiency to expect from a particular model of a motor.

Thinking Green

NEMA Premium Efficiency

NEMA has set standards for the energy efficiency of electric motors based on horsepower. Motors that meet these efficiency standards have a NEMA Premium® label. **Figure 15-33** shows a partial list of the efficiency requirements that a motor must meet or exceed.

- Power factor. This is a ratio of apparent power to true power under full-load conditions.

When selecting a motor for a specific purpose, important information may not be found on the motor nameplate. This may include the motor's operating position (horizontal, vertical, angled), direction of rotation, and recommended operating environment (heat, humidity, etc.).

15.5 Motor Applications in HVACR Systems

Electric motors are used in HVACR for a variety of purposes. The main applications are for operating compressors, fans, pumps, and dampers. The following motors are typically used to drive compressors:

- Capacitor-start, induction-run (ac).
- Capacitor-start, capacitor-run (ac).
- Permanent split capacitor (ac).
- Three-phase (ac).

Some motors commonly used to turn fans include the following:

- Split-phase (ac).
- Shaded-pole (ac).
- Permanent split capacitor (ac).
- Electronically commutated motor (dc).

15.5.1 Compressor Motors

The basic operation of ac motors is the same regardless of whether they are used to drive a hermetic compressor or an open-drive compressor. An open-drive compressor is a compressor that is driven by an external means. The compressor's crankshaft is either directly coupled to the motor shaft or is connected by means of a belt and pulley system. Electric motors are often used in open-drive applications to drive accessory devices as well. A hermetic compressor consists of a motor sealed inside a compressor dome along with the compressor. The motor shaft serves as the compressor's crankshaft.

The design characteristics of electric motors depend on their purpose in a system. For compressor motors, a technician must determine whether the motor needs to start under load, under no load, or under a balanced pressure condition. Motors that start under load need a higher starting torque. Usually, manufacturers try to provide starting power equal to twice the running power. In other words, a 1/6 hp motor is designed to produce 1/3 hp during starting. Higher starting torque also requires larger conductors for higher current in the starting circuit.

Open-Drive Compressor Motors

The main types of motors used for open-drive compressors are capacitor-start motors, PSC motors, and three-phase motors. There are two main methods of connecting an open-drive compressor and its motor: belt-driven and direct drive.

On a belt-driven compressor, the motor crankshaft drives a wheel connected to the compressor's pulley wheel by means of a belt. The speed reduction for belt drives is usually about 3:1 (three to one). This means that the compressor wheel diameter is three times larger than the motor pulley diameter. Compressor speed on an open-drive system can be controlled by changing pulley sizes, **Figure 15-34**.

Copyright Goodheart-Willcox Co., Inc.

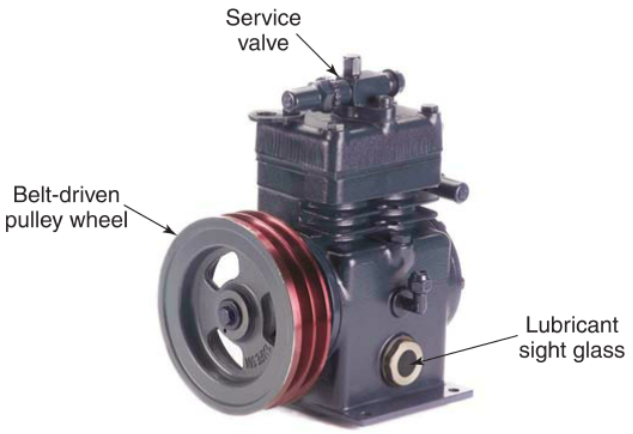

Blissfield Manufacturing

Figure 15-34. This open-drive compressor would be driven by a motor with a pulley and belt.

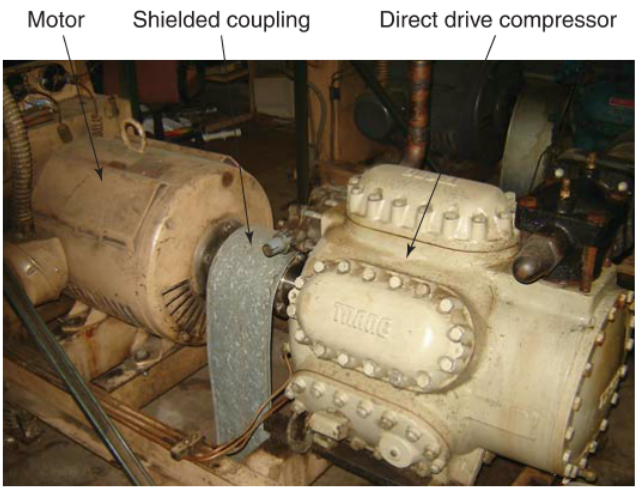

Bitzer

Figure 15-35. This open-drive compressor is directly coupled to its motor's shaft.

On a direct drive compressor, the motor shaft and compressor crankshaft are directly connected together using a coupling, **Figure 15-35**. Direct-drive compressors must operate at the motor speed. If the speed of the compressor must increase or decrease, the motor will have to change speeds. Depending on the type of motor used, this might be accomplished using a variable frequency drive.

Hermetic Compressor Motors

As mentioned previously, a hermetic compressor consists of a motor sealed inside a compressor dome along with the compressor's mechanical parts.

Tecumseh Products Company

Figure 15-36. This cutaway view of a hermetic compressor shows the motor's location inside the compressor dome. Note that the motor and its windings are exposed to the refrigerant and oil inside the compressor.

Figure 15-36 illustrates a typical hermetic compressor. These motors have some problems not found with open-drive setups.

Special cooling provisions must be made for hermetic and semi-hermetic compressor motors using one of several methods. One way is pressing the stator into a dome that has cooling fins. Heat from the motor travels along the enlarged surface area of the cooling fins and dissipates quickly, **Figure 15-37**.

Another cooling method uses water flowing through a coil around the motor to dissipate heat while the unit is running. Some designs pass partly cooled refrigerant from the condenser around the motor housing. However, systems will more often pass cool suction line vapor and oil over the motor windings.

A hermetic design also requires leakproof electrical connections because the motor is subjected to the refrigerant and oil inside the compressor dome. Wiring insulation must be resistant to oil and chemicals in the refrigerant. This is particularly true in the presence of moisture or high temperatures. Most manufacturers have developed special synthetic wire coatings (usually synthetic enamels) that insulate well. They are also safe to use with most of the popular refrigerants.

Copyright Goodheart-Willcox Co., Inc.

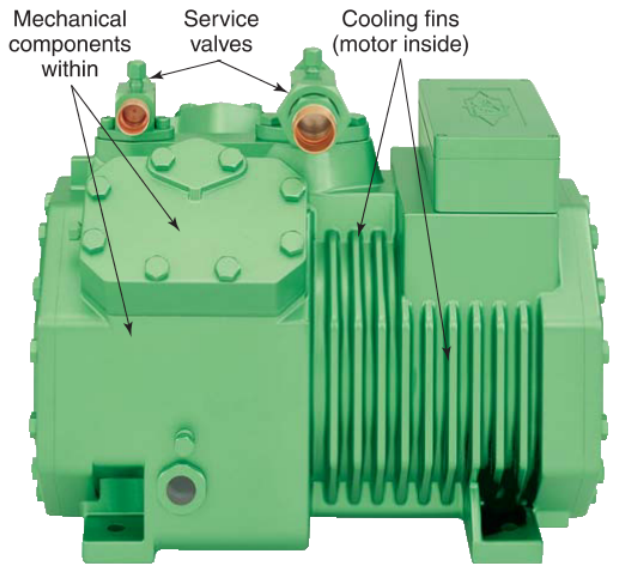

Bitzer

Figure 15-37. Semihermetic reciprocating compressors commonly use cooling fins as a method of dissipating heat from the motor.

Fusite

Figure 15-38. The metal disk holding these electrical terminals is welded to a hermetic compressor dome.

For hermetic units, the motor terminals that connect the motor windings to the power source are always located outside of the compressor dome. These electrical terminals would quickly fail inside the dome due to the oil and refrigerant mist. Most motor terminals are fused to glass. The glass, in turn, is fused to a metal disk. This assembly is welded to the hermetic dome or housing, **Figure 15-38**. Wires are connected to the motor terminals with spring-loaded clips.

Other hermetic compressors use what are called ***built-up terminals***. These bolt to the compressor dome. Gaskets of synthetic material are used to make a leak-proof joint. The advantage of built-up terminals is that it is easier for technicians to install replacement terminals if needed. See **Figure 15-39**.

The three motor terminals on a single-phase hermetic compressor are common (C), starting (S), and running (R). The ***common terminal*** connects to a single line that joins one end of the start winding to one end of the run winding. The ***starting terminal*** connects to the other end of the start winding, and the ***running terminal*** connects to the other end of the run winding. These terminals may be identified by their capitalized first letter on the motor, **Figure 15-40**.

If a hermetic compressor with an intact motor but does not identify the terminals by letter, take resistance measurements of the windings using an ohmmeter. Terminal identification can be determined by comparing ohmmeter readings taken between the terminals.

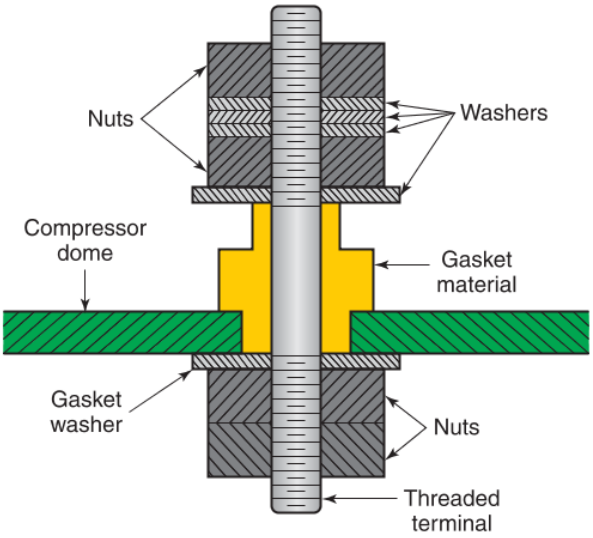

Goodheart-Willcox Publisher

Figure 15-39. This cross section of a built-up terminal shows each side of the installation, including the gasket material used to make the joint leakproof. Wires are connected on the outside of the compressor between the washers.

Copyright Goodheart-Willcox Co., Inc.

Identifying Unmarked Compressor Terminals

Before beginning this procedure, make sure no power is applied to the compressor. Open any power switches before disconnecting any wiring. Take voltmeter readings to make sure the power is off.

1. Set your multimeter or ohmmeter to its lowest resistance or ohm setting. Take a reading of the first two terminals and write down the resistance value: _____ Ω.
2. Next, take a reading of the first and third terminals and write down the resistance value: _____ Ω.
3. Next, take a reading of the second and third terminals and write down the resistance value: _____ Ω.
4. The highest resistance value is between the starting and running terminals because each terminal is connected to opposite ends of starting and running windings. This is measuring the resistance of those two coils connected together in series. This means that the terminal that was *not* included in the highest resistance measurement is the common (C) terminal.
5. The middle resistance value is between the starting and common terminals, which is a measurement of just the start winding resistance. The start winding in a single-phase motor is made of smaller gage wire than the run winding so it has a higher resistance. This means that the terminal that was not included in the middle resistance measurement is the running (R) terminal.
6. The lowest value is between the running and common terminals, which is a measurement of the run winding resistance. The run winding in a single-phase motor is made of larger gage wire than the start winding so it has a lower resistance. This means that the terminal that was not included in the lowest resistance measurement is the starting (S) terminal.
7. By using the measured resistance values and process of elimination, an HVACR technician can identify the unmarked motor terminals on a single-phase hermetic compressor.

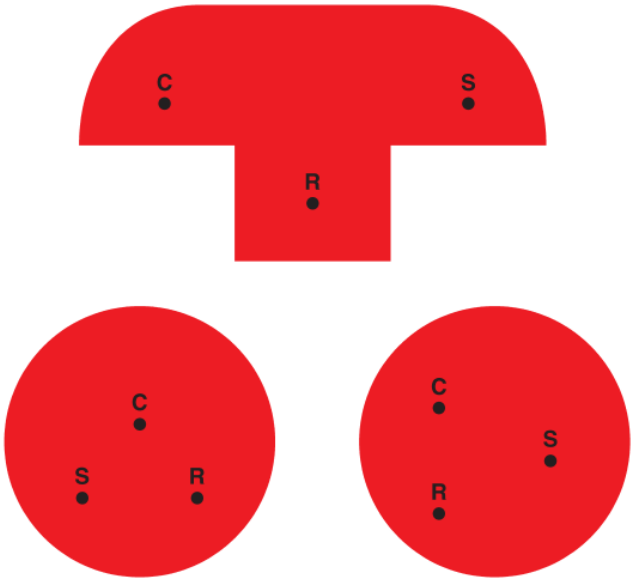

Goodheart-Willcox Publisher

Figure 15-40. Note the different arrangements of terminals on hermetic compressors. The lower-left image resembles the terminal arrangement most often used.

15.5.2 Fan Motors

Motor-driven fans are used in two main parts of an HVACR system: the outdoor unit (condenser) and the indoor air handler (evaporator). Fans force air across a condenser to help dissipate heat from high-side refrigerant. In an evaporator, fans are used to circulate cooled air throughout a conditioned space. To create efficient air movement, the fan assembly is typically housed in sheet metal or plastic so that it draws air from a specific area and moves it to a specific area.

Fans are carefully balanced and should run with little noise. A fan is usually connected to a motor shaft with setscrews. The fan motor may be attached to brackets and mounted with rubber grommets. Generally, motor leads for a condenser fan are connected to the common terminal and the running terminal of a compressor motor. This connection puts the fan motor in parallel with the compressor motor and allows it to be controlled by the thermostat. When the compressor runs, the condenser fan also runs.

Many fan motors have two or three speed settings. Different speeds are possible by using different numbers of poles in the stator or by using solid-state controls. The speed of fan motors is quite sensitive to the applied voltage. As the applied voltage drops, so will the fan speed. It should be noted that varying the applied voltage of induction motors is not a safe or accepted method of controlling fan speed. Speed control is better done using a variable frequency drive.

Copyright Goodheart-Willcox Co., Inc.

As with compressor motors, fan motors can be set up to directly drive a fan using a coupling or use a belt and pulley assembly. A technician should regularly check the condition of a fan's belt. Check for frays and cracking. Poorly aligned pulley and wheel can cause premature wearing of a fan's belt. With regular maintenance, a belt-driven fan and its motor should provide years of good service, **Figure 15-41**.

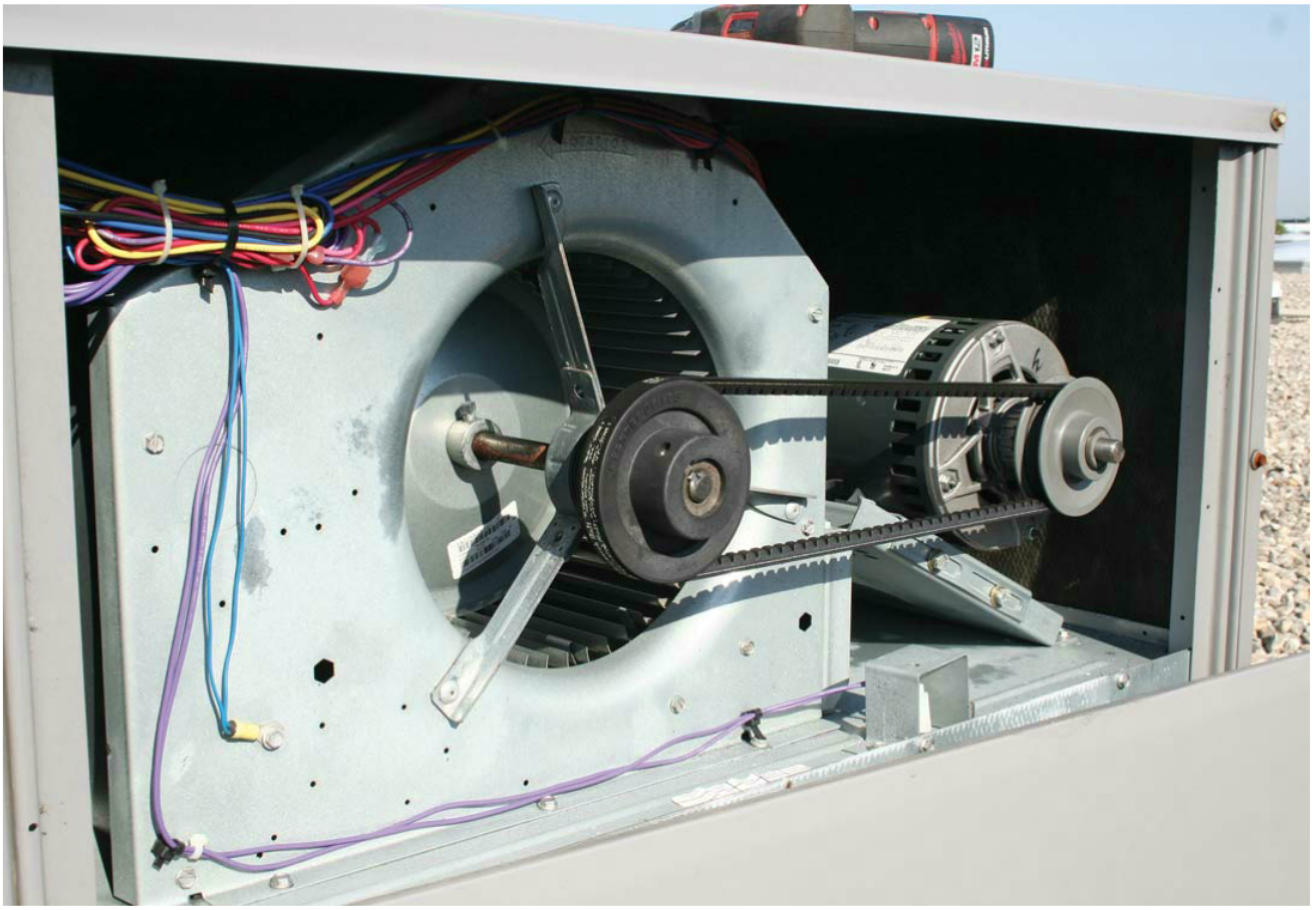

Goodheart-Willcox Publisher

Figure 15-41. This rooftop unit (RTU) has a belt-driven blower and motor.

Copyright Goodheart-Willcox Co., Inc.

Chapter Review

Summary

- Motors have two main parts: a stator and a rotor. The stator is composed of field windings and field poles. The rotor is composed of coils of wire or metal bars surrounding an iron core. The interaction between the magnetic fields of the stator and the rotor causes the rotor to rotate.
- Counter electromotive force (cemf) is the voltage generated in the rotor that has a polarity opposite of the stator's polarity. If a motor's rotor is slowed by a heavy load or seized bearings or lack of lubrication, current flow will increase and could cause overheating and motor burnout if overcurrent protection does not open the circuit.
- In ac induction motors, rotational speed is determined by two factors: the frequency of the alternating current and the number of field poles in the stator. Due to magnetic slippage, ac motors run slightly slower than their calculated synchronous speed.
- In order to start, many single-phase ac motors use start and run windings to create phase splitting to create starting torque. Because the start and run windings have different inductance values, the current flowing through one winding is out of phase with the other winding, which creates a rotating magnetic field that provides the torque necessary to turn the rotor.
- Capacitors provide more torque than start and run windings alone because they cause a larger phase displacement. A start capacitor is added to a start winding circuit to provide more torque during motor start-up, while a run capacitor provides additional torque during the motor's entire operation.
- Types of single-phase ac motors used in HVACR include split-phase; capacitor-start, induction-run (CSIR); capacitor-start, capacitor-run (CSCR); permanent split capacitor (PSC); and shaded-pole motors. Each type of motor varies in its amount of starting and running torque, depending on how it is designed.
- Three-phase motors are induction motors that operate using three signals of alternating current to power three sets of stator windings. Each signal reaches its peak voltage level at different times, which creates high starting torque without the need for capacitors or start windings. Many three-phase motors are dual-voltage motors and can run on 240 V or 480 V power.
- Variable frequency drives (VFDs) are control modules that can vary the frequency of the electrical signals produced to change the speed at which an ac induction motor's rotor turns. When used to control a compressor or blower, a VFD can vary the amount of refrigerant pumped or the amount of air moved. This allows an HVACR system to operate efficiently based on the load applied to the system.
- An electronically commutated motor (ECM) is a type of brushless dc motor that uses an electronic control module to energize the stator windings in sequence. Unlike most motors, an ECM's rotor is made of permanent magnets. ECMs are energy efficient and also versatile for their numerous programmable options and ability to operate at different speeds. They are primarily used to drive fans.
- In order to select the right motor for a certain application, a technician has to refer to a motor's nameplate. Motor nameplates contain information about a motor's rated voltage, full-load amperage, frequency, phase, full-load speed, horsepower, insulation class, time rating, locked rotor amperage, service factor, and many other characteristics.
- Motors can be used to power open-drive and hermetic compressors. Open-drive compressors use a belt or coupling to connect to the motor shaft. The motor in a hermetic compressor is sealed in the compressor dome and drives the compressor directly. A hermetic compressor has electrical terminals on the outside of its dome.
- Motors are widely used in HVACR systems to power fans that circulate air around the condenser or evaporator. For condenser fans, the motor is often wired so that when the compressor motor runs, the condenser fan also runs. Fan motors can use a coupling to directly drive a fan or use a belt with pulley and wheel to drive a fan.

Review Questions

Answer the following questions using the information in this chapter.

1. The two main parts of a motor are the _____.
   A. stator and field poles
   B. field poles and field windings
   C. end bells and rotor
   D. rotor and stator

Copyright Goodheart-Willcox Co., Inc.

2. Instead of coils of wire, a squirrel cage rotor has _____ mounted on an iron core.
   A. field poles
   B. metal bars
   C. field windings
   D. bearings
3. Which of the following best explains the relationship between the rotor and the stator in an ac induction motor?
   A. The alternating current flowing through the rotor causes the stator's polarity to change.
   B. The voltage applied to the rotor generates counter electromotive force in the stator.
   C. The magnetic field generated by the stator induces current in the rotor, which causes the rotor to generate its own magnetic field.
   D. The stator is a horseshoe magnet, and the rotor is a bar magnet.
4. The magnetic field generated in the rotor induces a voltage called _____ that has a polarity opposite of the applied voltage's polarity.
   A. counter current
   B. counter emf
   C. counter pressure
   D. counter power
5. The speed of ac motors is primarily determined by which two factors?
   A. Voltage and current
   B. Frequency and current
   C. Voltage and number of field poles
   D. Frequency and number of field poles
6. Slip is the difference between a motor's synchronous speed and its rated _____ speed.
   A. frequency
   B. four-pole
   C. full-load
   D. slippage
7. A motor's start winding has a higher inductance value than the run winding because it is made of _____.
   A. larger gage wire
   B. permanent magnets
   C. fewer coil turns
   D. more coil turns
8. Start and run windings cause _____, which is when the current in the start winding is out of phase with the run winding.
   A. capacitance
   B. phase splitting
   C. single-phase induction
   D. three-phase power
9. Capacitors are used to generate higher starting _____ because they cause larger phase displacement between the start and run windings.
   A. loads
   B. voltage
   C. amperage
   D. torque
10. Start capacitors and run capacitors are added to the _____ circuit of an induction motor for additional torque.
    A. start winding
    B. run winding
    C. low-voltage control
    D. ECM
11. Split-phase motors use a(n) _____ to disconnect the start windings as the motor approaches running speed.
    A. unloader
    B. VFD
    C. squirrel cage rotor
    D. centrifugal switch
12. On a capacitor-start, induction-run motor, a centrifugal switch or relay disconnects the _____ when the motor reaches about 75% of its rated speed.
    A. start winding only
    B. start capacitor only
    C. both the start winding and start capacitor
    D. both the start capacitor and run capacitor
13. Which type of single-phase induction motor has the starting torque to start under heavy loads?
    A. Split-phase motor
    B. Permanent split capacitor motor
    C. Shaded-pole motor
    D. Capacitor-start, capacitor-run motor
14. Although permanent split capacitor motors have low starting torque, they operate the same as a _____ motor operates in running mode, but not starting mode.
    A. capacitor-start, induction-run
    B. capacitor-start, capacitor-run
    C. split-phase
    D. shaded-pole
15. As the voltage level decreases in a shaded-pole motor's field windings, the electromagnetic field becomes centered over the _____.
    A. field pole
    B. shaded pole
    C. rotor
    D. motor shaft

Copyright Goodheart-Willcox Co., Inc.

16. Three-phase motors are commonly _____ motors because of the way their stator windings are arranged in pairs.
    A. dual-voltage
    B. shaded-pole
    C. capacitor-start, induction-run
    D. capacitor-start, capacitor-run
17. To reverse a three-phase motor's direction of rotation, a technician must disconnect two power leads and connect each one to the _____.
    A. common terminal
    B. other lead's terminal
    C. ground screw
    D. rotor
18. A dual voltage, three-phase motor can be wired for high voltage by connecting the field windings in _____.
    A. series
    B. parallel
    C. series-parallel
    D. reverse
19. A VFD controls an induction motor's speed by changing _____.
    A. frequency
    B. number of field poles
    C. phase splitting
    D. voltage level
20. In an electronically commutated motor, the rotor is made of _____.
    A. coils of wire
    B. field poles
    C. metal bars
    D. permanent magnets
21. Advantages of ECMs include the following, *except* _____.
    A. ability to maintain constant airflow
    B. easily replaceable brushes
    C. efficient performance
    D. variable speed
22. Important motor information such as rated voltage, time rating, insulation class, frequency, phase, and horsepower can be found on the _____.
    A. motor frame
    B. motor nameplate
    C. bearings
    D. shaft
23. The current that a motor draws as power is first applied at start-up is the motor's _____.
    A. rated full-load amperage
    B. rated voltage
    C. locked rotor amperage
    D. low-load amperage
24. Which of the following are the three motor terminals found on a single-phase hermetic compressor?
    A. Common, starting, and reversing
    B. Common, running, and stator
    C. Common, starting, and running
    D. Common, starting, and rotor
25. In which two parts of an HVACR system are motor-driven fans typically used?
    A. The condenser and evaporator.
    B. The condenser and metering device.
    C. The evaporator and metering device.
    D. The metering device and compressor.

Copyright Goodheart-Willcox Co., Inc.

CHAPTER 16 Electrical Control Systems

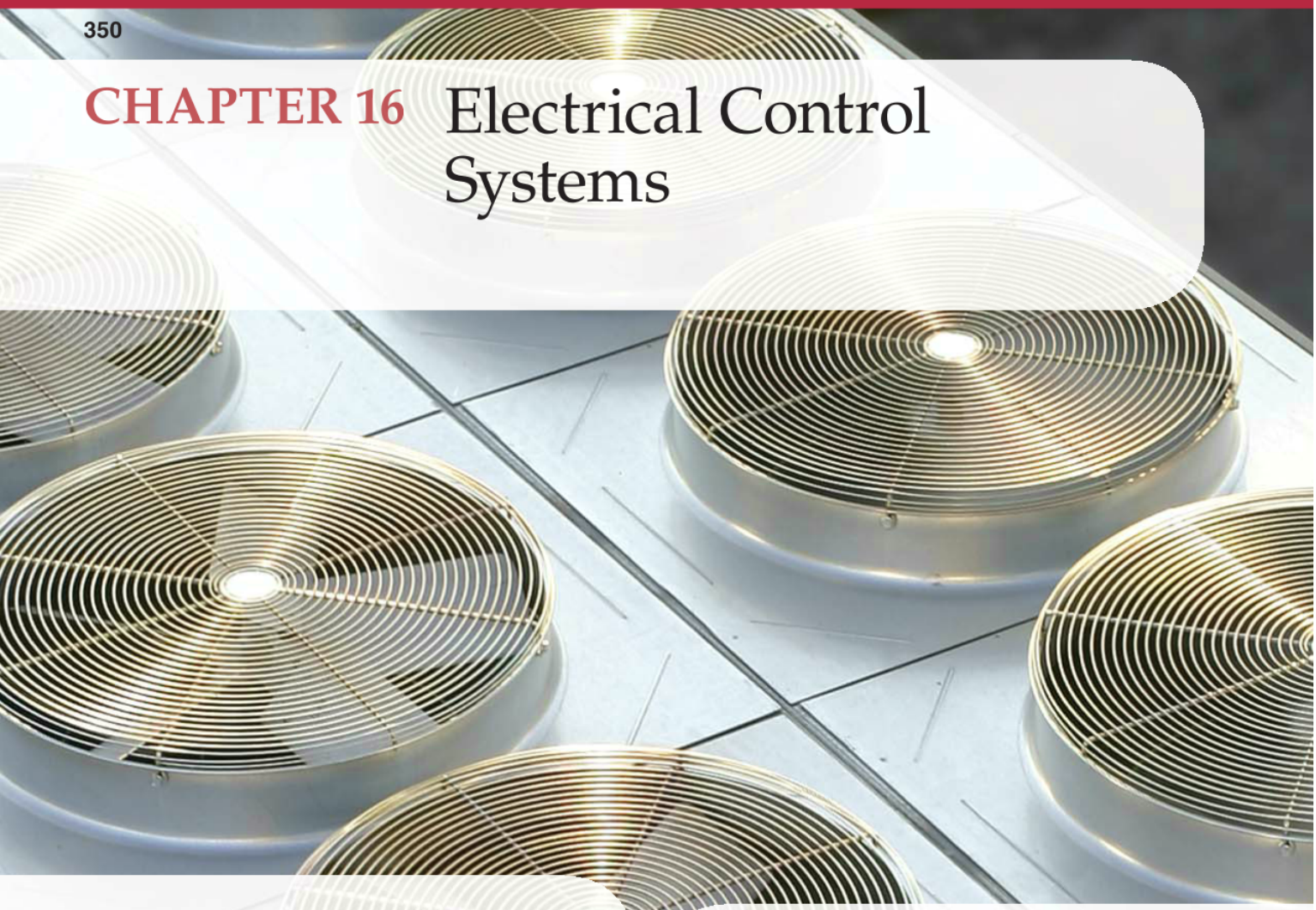

Chapter Outline

16.1 Circuit Diagrams
- 16.1.1 Pictorial Diagrams
- 16.1.2 Ladder Diagrams

16.2 Control System Fundamentals
- 16.2.1 Range Adjustment
- 16.2.2 Differential Adjustment

16.3 Motor Controls
- 16.3.1 Temperature Motor Control
- 16.3.2 Bimetal Devices
- 16.3.3 Electronic Temperature Sensors
- 16.3.4 Pressure Motor Controls
- 16.3.5 Motor Starting Relays

16.4 Motor Protection Devices
- 16.4.1 Fuses
- 16.4.2 Circuit Breakers
- 16.4.3 Bimetal Protection Devices
- 16.4.4 Thermistor-Based Protection Devices

16.5 Direct Digital Controls (DDC)
- 16.5.1 Control Loops
- 16.5.2 DDC System Components

Learning Objectives

Information in this chapter will enable you to:

- Understand the difference between pictorial and ladder circuit diagrams.
- Describe how range and differential adjustments are used to calibrate temperature and pressure controls.
- Identify the various types of temperature-sensing devices used in motor controls.
- Compare the operation of various electromagnetic and electronic motor starting relays.
- Test and evaluate various starting relays for proper operation.
- Explain how motor protection devices protect motors from current overloads and overheating.
- Introduce direct digital control (DDC) system basics.
- Summarize how a control system uses sensors, controllers, and actuators to maintain a conditioned space.

Technical Terms

above-atmospheric-pressure element
actuator
below-atmospheric-pressure element
bimetal coil
bimetal device
bimetal disc
bimetal strip
blown fuse
circuit breaker
closed-loop control system
conditioned space
contactor
control point
control system
controlled device
controller
current relay
current-limiting fuse
cut-in
cut-out
differential
differential adjustment
direct digital control (DDC)
fast-acting fuse
feedback
fuse
high-pressure motor control
impedance
ladder diagram
lockout relay
low-pressure motor control
low-pressure safety control
motor starter
multipurpose fuse
offset
open-loop control system
pickup voltage
pictorial diagram
positive temperature coefficient (PTC) relay
potential relay
pressure motor control
range
range adjustment
remote temperature-sensing element
sensing bulb
set point
solid-state relay (SSR)
temperature motor control
time-delay fuse
tripped circuit breaker
volatile fluid
Wheatstone bridge

Review of Key Concepts

Reviewing these concepts from earlier chapters will help you understand new concepts presented in this chapter:

- Series circuits provide current with a single path to follow, whereas parallel circuits allow current to flow along two or more electrical paths. (Chapter 12)
- Control systems use sensors to detect and respond to a stimulus, such as a change in temperature or pressure. (Chapter 14)
- A relay is an electrical switch that opens or closes a circuit when its coil is energized by an electrical signal. (Chapter 14)
- Single-phase ac motors use start and run windings and start capacitors or a combination of these to produce the torque needed to begin running. (Chapter 15)
- Devices, such as fuses, circuit breakers, and thermistors, are used to protect circuits from current overloads and overheating. (Chapter 13)

6

Introduction

Electrical control systems are used to regulate the operation of an HVACR system and protect its components from operating outside of their designed boundaries. From controlling a compressor's On and Off cycles to modifying the position of a damper in an air duct, electrical controls help an HVACR system automatically produce the desired condition in a space. In addition, control system components can be used as safety devices to detect unsafe operating conditions and shut down a system before any damage occurs. This chapter focuses on the fundamental operation of control systems and explains how the components used in those systems function. More detailed information about application-specific controls, such as defrost controls, is presented in the chapters dealing with those systems.

Videos

- Checking a Potential Relay
- Checking a Current Relay

16.1 Circuit Diagrams

Electrical circuit diagrams come in a variety of forms and styles. Each type of diagram has a specific purpose. There are two main styles of diagrams that HVACR technicians will encounter:

- Pictorial diagrams.
- Ladder diagrams.

16.1.1 Pictorial Diagrams

A ***pictorial diagram***, or pictorial wiring diagram, is primarily used in service or installation manuals to illustrate how to connect electrical devices in a unit. A technician can use a pictorial diagram to trace wire connections between devices. This is useful for locating a loose or omitted connection. Pictorial diagrams not only show all the connections among a circuit's devices, but they also show the approximate physical location of devices in a unit. For example, if a pictorial diagram shows a contactor in the upper-right corner and a three-phase motor in the lower-left corner, a technician can open up the service panel and expect to find these parts in the locations specified, **Figure 16-1**.

By illustrating a device's physical location, a pictorial diagram helps technicians identify devices that they may not be familiar with. In addition, pictorial diagrams may give the colors of wires running to and from devices, which further aids a technician in verifying the devices in a circuit.

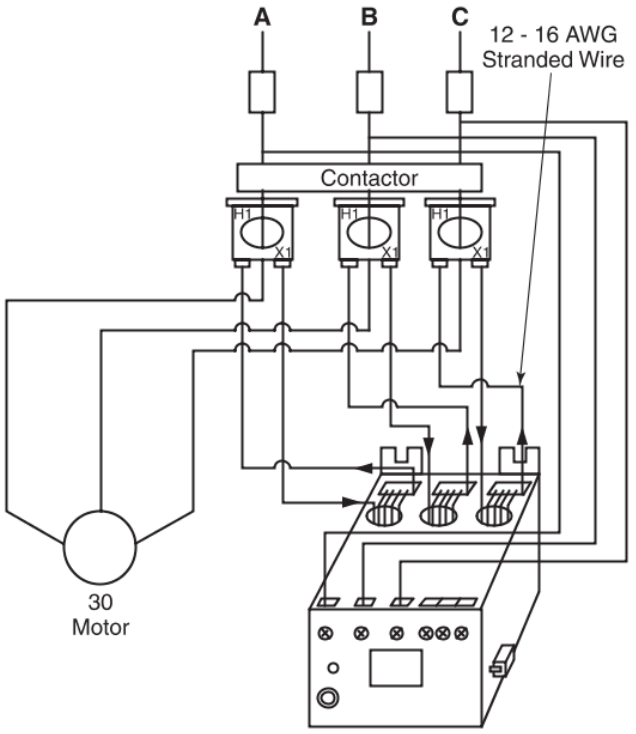

SSAC, LLC

Figure 16-1. This pictorial diagram shows the wiring connections and the positions of devices in relation to each other.

16.1.2 Ladder Diagrams

Ladder diagrams, or ladder logic wiring diagrams, are arranged with two parallel power wires that have rungs between them, like a ladder. They are set up to reflect the order of component operation in a system. Devices near the top will be energized and started before devices further down. In a ladder diagram, the vertical lines are the power supply, and the horizontal lines contain the various controls and loads located in the circuit. Schematic symbols show the devices and their connections in the order that they activate during circuit operation.

A ladder diagram is often provided with each unit by the manufacturer to help with troubleshooting electrical problems. HVACR units usually have a ladder diagram glued to the back of the unit's access door. To effectively troubleshoot a system, a technician should know the sequence in which devices activate. A ladder diagram shows this information. A ladder diagram of a domestic refrigerator's defrost cycle is shown in **Figure 16-2**.

To a beginner, ladder diagrams may appear to be rather complicated. However, the various circuits and controls can be broken down into several individual circuits. Each horizontal line, or rung, on a ladder diagram represents an individual circuit that has a load. The circuit may also contain switches, relays, or devices used to control that load. Each line in a ladder diagram is usually numbered to keep everything organized.

16.2 Control System Fundamentals

An HVACR ***control system*** is a collection of interacting components that work together to achieve a common purpose, such as controlling temperature or an enclosed environment. These control systems regulate conditions, such as temperature, pressure, and humidity, within specified areas, called ***conditioned spaces***.

Components used in control systems include sensors, controllers, and controlled devices. Control systems are often described based on the way they transmit signals from the sensor to the controller and from the controller to the controlled device. The common modes of communication include the following:

- Mechanical.
- Electrical.
- Pneumatic.
- Electronic.
- Hydraulic.

Copyright Goodheart-Willcox Co., Inc.

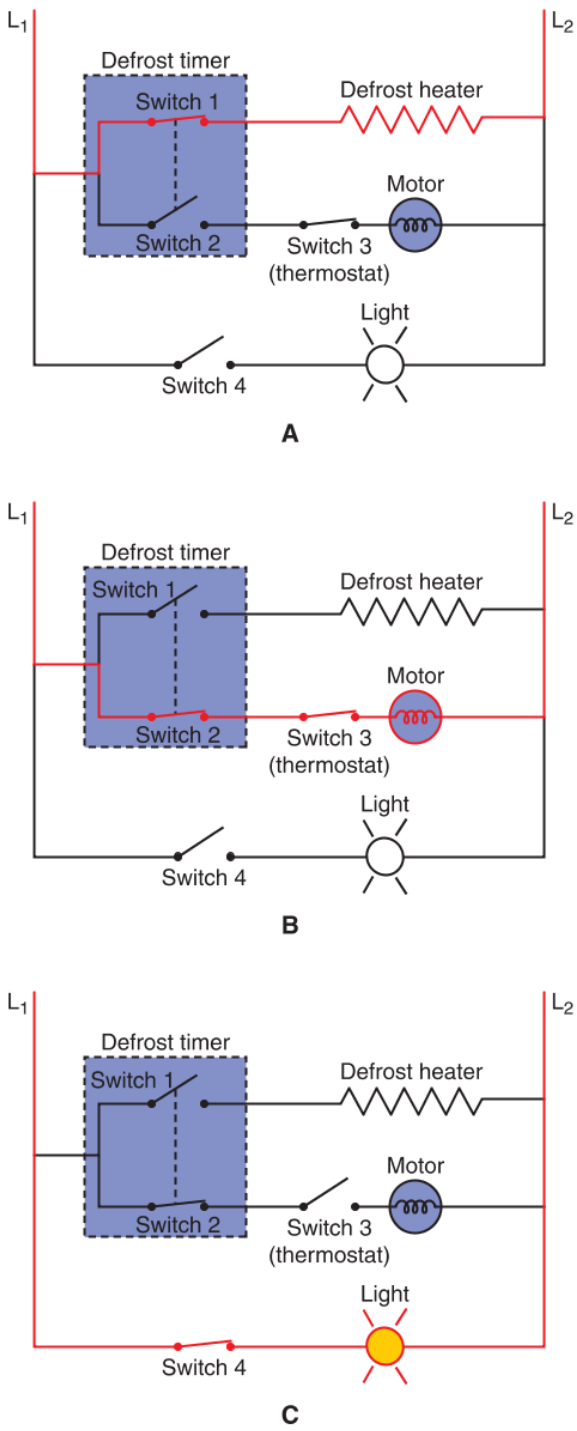

Goodheart-Willcox Publisher

Figure 16-2. Ladder diagram showing the sequence of device activation for a domestic refrigerator's defrost cycle. A—The cycle begins with the motor and light switched off, and the defrost heater switched on. B—After defrosting, the compressor motor is switched on for the refrigeration cycle. C—After the cabinet reaches the desired temperature, the thermostat switches off the compressor motor, and the light turns on.

- Direct digital control (DDC).
- Combinations of the above.

When dealing with controlled devices, at least two values must be known. The devices cut-in and cut-out. ***Cut-in*** is the condition value at which a device begins operation. This is typically a temperature or pressure value, but it could be another type of value, based on the device in question. ***Cut-out*** is the condition value at which a device ceases operation. Measuring these two values and observing when a device begins and ends operation allows a technician to verify proper operation.

Many controls can be adjusted in two ways: range adjustment and differential adjustment. If calibrated and set properly, these adjustments alone are sufficient to maintain a properly controlled environment. Understanding the function of these adjustments is key to keeping a space suitably conditioned.

6

16.2.1 Range Adjustment

Range adjustment regulates the minimum and maximum temperature or pressure in automatic control systems. For example, range adjustment will keep a conditioned space between certain temperatures or certain pressures. A control system's ***range*** is the set of numbers between and including the cut-in and cut-out values. The range encompasses the values during which the system operates after reaching the cut-in value. Thus, if a heating system has a cut-in temperature of 72°F (22.2°C) and a cut-out temperature of 77°F (25°C), it has a range from 72°F to 77°F. **Figure 16-3** shows how adjusting the range also changes the cut-in and cut-out values.

It is very difficult to keep any device or space at one particular temperature or pressure for a length of time. However, temperatures and pressure within a close range of values are often nearly as good as one set value. This is why range adjustment can be satisfactorily used to regulate a conditioned space. **Figure 16-4** shows a range adjustment.

Heating System Range Adjustment		
	Cut-In Temperature	Cut-Out Temperature
Original setting	72°F	77°F
–3°F range adjustment	69°F	74°F
+3°F range adjustment	75°F	80°F

Goodheart-Willcox Publisher

Figure 16-3. When range adjustment is used to modify a thermostat's range, both the cut-in and cut-out values move equally in the same direction. This means the difference between the two values stays the same.

Copyright Goodheart-Willcox Co., Inc.

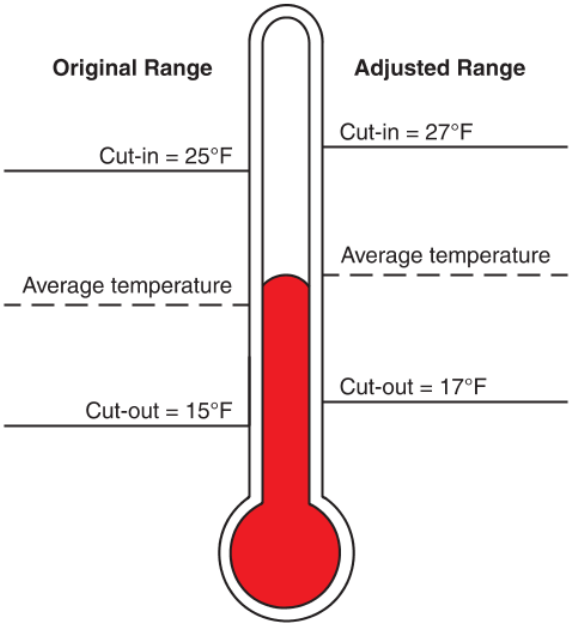

Goodheart-Willcox Publisher

Figure 16-4. The original range setting on the left and the adjusted range setting on the right. Note that the average temperature changes, but the difference between the cut-in and cut-out temperatures does not change. There is still 10°F difference between cut-in and cut-out.

A range adjustment can be made to modify the temperature of the conditioned space to make it warmer. With range adjustment, the cut-in and cut-out temperatures are both raised higher, but the difference between the two temperatures does not change. Range adjustments work the same way when decreasing the temperature or pressure range as when increasing it. For example, if the range is lowered one degree, the cut-in and cut-out temperatures are both lowered one degree.

In some controls, range adjustment is accomplished by an adjustable force pressing directly on the bellows or diaphragm that operates the switch. This force is exerted on the bellows or diaphragm regardless of whether the switch is in the cut-out or cut-in position. The adjustable force may be an adjustable weight that always presses against the bellows. More commonly, however, it is a spiral spring with an adjustable screw. Turning the screw changes the pressure or the tension on the spring. The spring may press or pull directly on the bellows or diaphragm, or on a lever attached to the bellows. See **Figure 16-5**.

Most range adjustment screws have a calibrated dial or a pointer connected to them. This indicates the direction the screw should be turned to provide a higher or lower setting. In bimetal temperature controls, the range is often adjusted by changing the position of the bimetallic element in relation to the contacts.

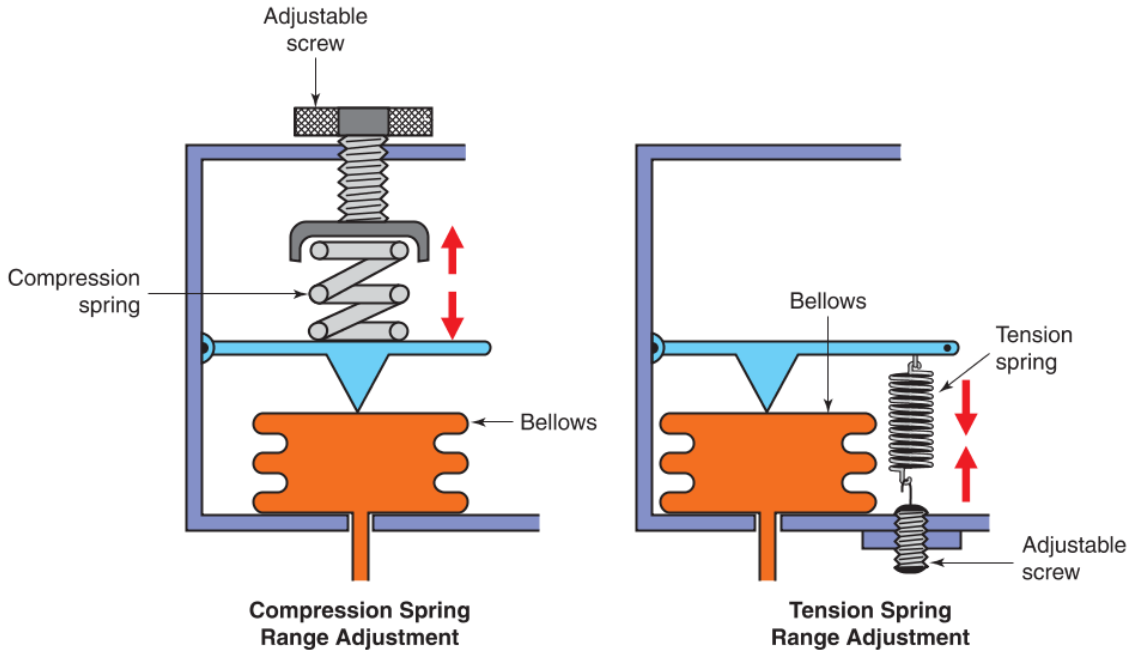

Goodheart-Willcox Publisher

Figure 16-5. Two types of range adjustments: one with a compression spring and one with a tension spring. The compression spring pushes outward against both the bellows and the screw. The tension spring pulls inward, compressing the bellows.

Copyright Goodheart-Willcox Co., Inc.

In electronic controls, range adjustment is a function of the processor, **Figure 16-6**.

16.2.2 Differential Adjustment

A system's ***differential*** is the number of units (the difference) between the cut-out value and the cut-in value. Subtract the two values to get the differential. For a cooling system, subtract the cut-out from the cut-in: cut-in – cut-out = differential. For a heating system, subtract the cut-in from the cut-out: cut-out – cut-in = differential. Always subtract the lower value from the higher value.

For example, if a cooling system's cut-in temperature is 25°F (–3.9°C) and its cut-out temperature is 15°F (–9.4°C), the differential is calculated by subtracting 15°F from 25°F. This results in a differential of 10°F. In this example, the range is from 15°F to 25°F.

Pro Tip

Differential or Range Adjustment

When the range is adjusted, both cut-in and cut-out value move equally the same distance. This changes the range and average set point, but the differential is not affected. Whenever the differential is adjusted, the range and average set point are also changed.

Differential adjustment increases or decreases the difference between the cut-in and cut-out values. This control is built into the temperature or pressure control. Differential adjustment should only be made by a service technician who understands how the differential adjustment affects the system. For example, the thermostat differential for systems with a capillary tube metering device must be large enough to allow the pressures to equalize, which results in a longer Off cycle. However, the cut-in should not be too high. If it is too high, the temperature in the conditioned space will also rise too high. The following are the types of differential adjustment controls:

- Cut-in control—allows adjustment of only the cut-in value without changing the cut-out value.
- Cut-out control—allows adjustment of only the cut-out value without changing the cut-in value.
- Combination control—allows adjustment of both the cut-in and cut-out values. This type of adjustment allows both values to be brought closer together or moved further apart, **Figure 16-7**.

Using Range and Differential Adjustments

Adjusting the range affects the average temperature of a conditioned space. Consider the earlier example of a system with a cut-in temperature of 25°F (–3.9°C) and a cut-out temperature of 15°F (–9.4°C). Under the current range settings, the average temperature of the conditioned space is 20°F (–6.7°C). If

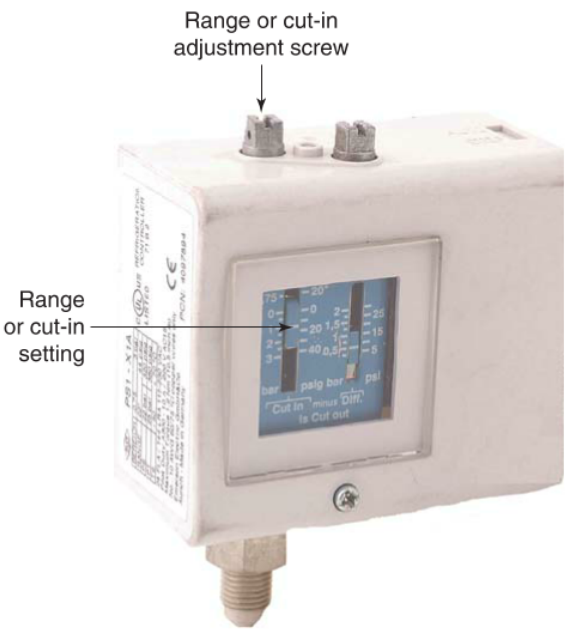

Emerson Climate Technologies

Figure 16-6. The range setting for this pressure control can be adjusted by turning the screw on top of the device.

Heating System Differential Adjustment			
	Cut-In Temperature	Cut-Out Temperature	Differential
Original setting	72°F	77°F	5°F
+3°F cut-out adjustment	72°F	80°F	8°F
–3°F cut-out adjustment	72°F	74°F	2°F
+3°F cut-in adjustment	75°F	77°F	2°F
–3°F cut-in adjustment	69°F	77°F	8°F
+2°F combination adjustment	70°F	79°F	9°F
–2°F combination adjustment	74°F	75°F	1°F

Goodheart-Willcox Publisher

Figure 16-7. Using differential adjustment, a technician can change a control's cut-in temperature, cut-out temperature, or both temperatures. These adjustments either increase or decrease the control's differential.

Copyright Goodheart-Willcox Co., Inc.

the range is increased by 5°F, so that it is from 20°F to 30°F, the average temperature also increases by 5°F to 25°F. Note that the differential in all these range adjustments stays at 10°F.

Increasing the range in a cooling system leads to a decrease in the run time of the unit because the desired condition is not as cold and requires less refrigeration to reach that the cut-out value. The opposite is true if the range is decreased: the average temperature of the conditioned space also decreases, which means the run time of the unit increases because the desired condition is colder and requires more refrigeration. A range adjustment affects a conditioned space's average temperature and alters a cooling system's run time.

Thinking Green

Range Adjustment

Adjusting a system's range can be an effective method of reducing energy consumption. Decreasing the average temperature in a cooling system means the compressor does not have to do as much work. As a result, there is a decrease in compressor motor current as well as a decrease in running time, which saves energy.

To maintain the same average temperature in a conditioned space but alter the cycle interval and run time, it is necessary to adjust both the range and differential. Remember that when the differential is adjusted, the range also changes. A combination differential adjustment that changes both cut-in and cut-out equally in opposite directions can be used to affect the cycle interval and run time without changing the average temperature in a conditioned space. In addition, cut-in control and cut-out control differential adjustments can be used to change the average temperature along with the run time and cycle interval.

To understand how a differential adjustment can affect run time without affecting average temperature, consider again the earlier example of a system with a cut-in temperature of 25°F (–3.9°C) and a cut-out temperature of 15°F (–9.4°C). A combination differential adjustment can be made to reduce the cut-out temperature by 1°F to 14°F (–10°C) and increase the cut-in temperature by 1°F to 26°F (–3.3°C). See **Figure 16-8A**.

With this adjustment, the average temperature stays at 20°F (–6.7°C), but the compressor runs longer because the differential has increased from 10°F to 12°F. On the other hand, there is also a longer interval between compressor cycles because the differential is larger. This means more time is required for the temperature to rise from the cut-out to the cut-in.

A combination differential adjustment can also be made to reduce the differential while maintaining the average temperature. For example, if the control's cut-in temperature is decreased to 24°F (–4.4°C) and its cut-out temperature is increased to 16°F (–8.9°C) the conditioned space maintains the same average temperature of 20°F (–6.7°C), **Figure 16-8B**.

Since the differential is now 8°F, the compressor runs for less time and the conditioned space's

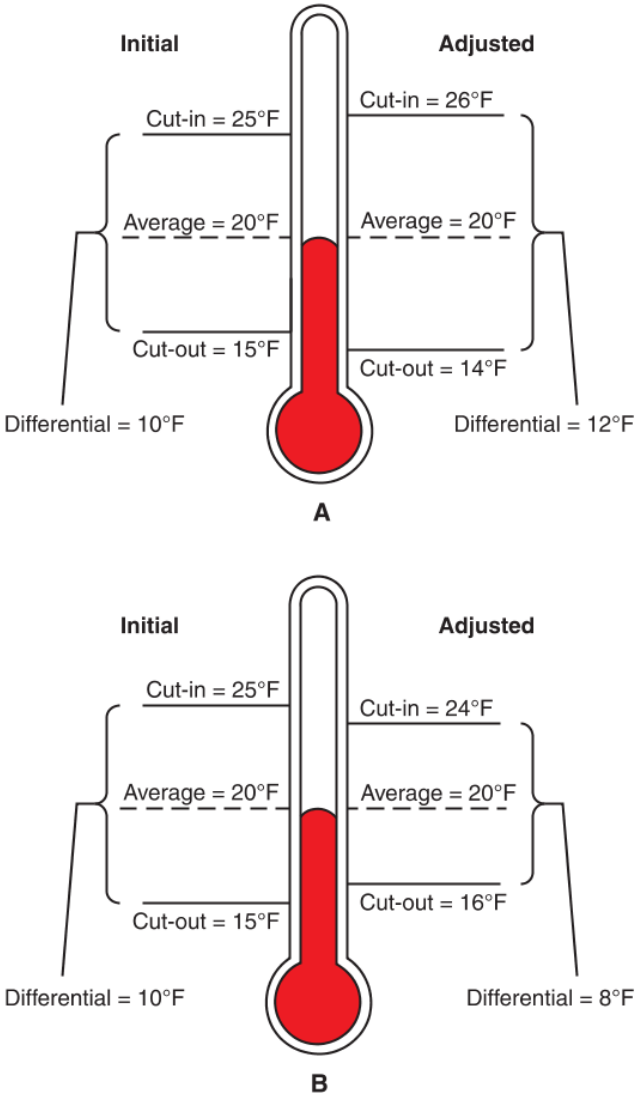

Goodheart-Willcox Publisher

Figure 16-8. Adjusting a combination differential changes the cut-in and cut-out temperatures by equal amounts and maintains the same average temperature. A—Increasing the cut-out and decreasing the cut-in leads to a larger differential, which means the compressor will run longer but less frequently. B—Decreasing the cut-out and increasing the cut-in leads to a smaller differential, which means the compressor will run more often but for shorter periods of time.

Copyright Goodheart-Willcox Co., Inc.

temperature varies less than before. In addition, the interval between the compressor's On and Off cycles is shorter because the differential is smaller, so less time is required for the temperature to change rise and fall between the cut-out and the cut-in values.

In each of the previous examples, the differential adjustments were combination, which changed both the cut-in and cut-out temperatures equally in order to maintain the same average temperature. However, not all differential controls are combination. Some are just cut-in or just cut-out differential controls. Cut-in differential control and a cut-out differential control affect the average temperature, the run time, and the cycle interval. Using the previous examples, if the cut-in temperature stays at 25°F (–3.9°C), but the cut-out temperature is reduced to 13°F (–10.6°C), the differential increases from 10°F to 12°F, **Figure 16-9**.

This cut-out differential adjustment changed the range from 15°F to 25°F to 13°F to 25°F. As a result, the conditioned space's average temperature decreased to 19°F, which means the compressor has to run longer to achieve a lower average temperature. However, there is also a longer interval between the compressor's On and Off cycles, because the differential has increased.

So far every differential adjustment has followed a pattern regardless of how the average temperature has changed: increasing a control's differential leads to a longer run time and a greater interval between cycles, while decreasing the differential leads to a shorter run time and a shorter interval between cycles. Using this principle, a technician can adjust a control's differential and range to achieve higher or lower average temperatures and longer or shorter run times and cycle intervals as needed.

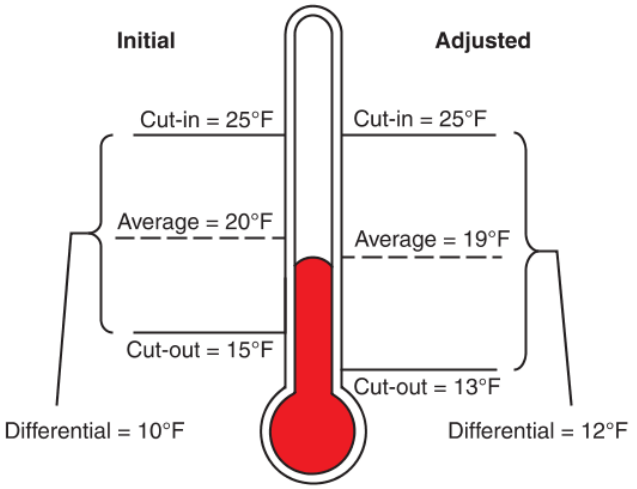

Goodheart-Willcox Publisher

Figure 16-9. Altering just the cut-out or cut-in affects the average temperature and the system's run time and cycle interval. This cut-out differential control lowered just the cut-out value, leaving the cut-in alone but increasing the range and lowering the average set point.

16.3 Motor Controls

Most refrigeration and air-conditioning systems are designed with more cooling capacity than needed. Therefore, under normal use, they do not run all of the time. To maintain the correct temperature in a conditioned space, the compressor motor must be turned off when the space reaches the desired temperature. It is turned on again when the conditioned space has warmed to a certain temperature. Motor operating controls measure two principal variables:

- Temperature (thermostatic motor control).
- Pressure (pressure motor control).

These controls have differential and range adjustments that change the values that operate the motor. Many of these controls also have a manual switch. This switch permits the system to be turned on or off as desired. The controls may also include an overload protector. An overload protector opens the circuit if the motor draws too much current. Thermostatic motor controls can also include timers for automatic defrosting or executing preprogrammed heating or cooling schedules.

There are three common types of temperature sensors used with thermostatic motor controls:

- Sensing bulbs.
- Bimetal devices.
- Electronic sensors.

16.3.1 Temperature Motor Control

A ***temperature motor control*** is a device that reacts to the heat it senses by closing or opening an electric switch to start or stop the operation of a motor. It is similar to low-pressure motor control in design. However, a temperature motor control uses a sensing bulb to react to heat instead of pressure. **Figure 16-10** shows a control with the cover removed. A temperature motor control is often referred to as a *thermostat*. A temperature motor control often has a fixed temperature differential.

Thermostats are generally used in large single evaporator installations. When used in multiple-evaporator systems, the thermostat is used to sense the warmest evaporator case. The system is sized so that when the unit shuts off the compressor (upon reaching the desired temperature in the warmest conditioned space), there is sufficient cooling achieved in the colder conditioned spaces. This permits each separate cabinet in a multiple-evaporator installation to be controlled.

Copyright Goodheart-Willcox Co., Inc.

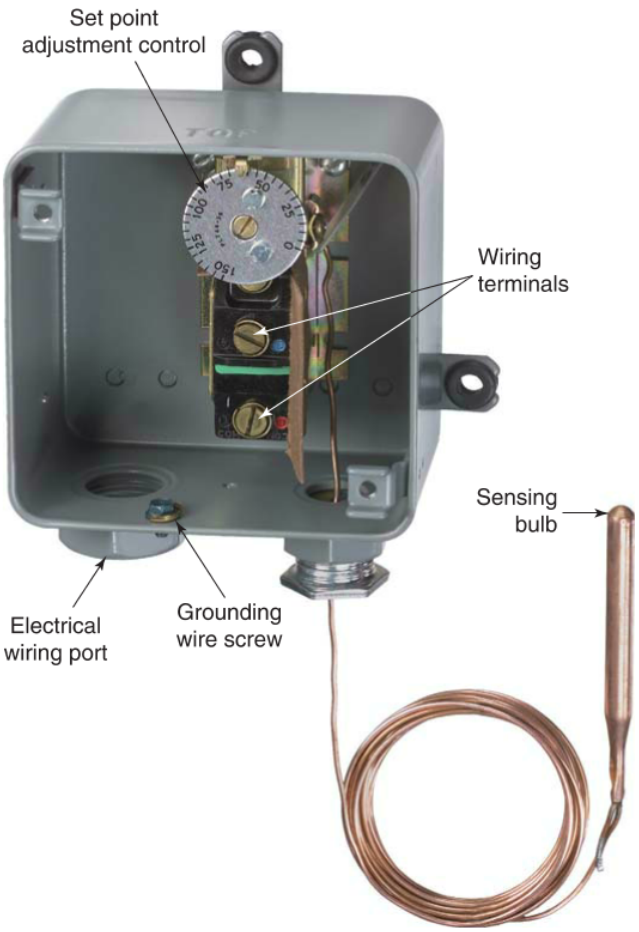

Johnson Controls, Inc.

Figure 16-10. Thermostatic motor control with cover removed to reveal inner components. Note temperature range dial (Fahrenheit scale) and electrical terminals.

Some thermostats are made with a very close differential, such as 1°F (0.5°C). These are used for certain display cases, such as bulk milk coolers, frost alarms, liquid chillers, and refrigerated trucks.

Some thermostats are wall mounted in walk-in coolers, meat storage rooms, warehouses, and florist cabinets. Some have double-throw contacts (SPDT). With these, the control may also operate other devices, such as evaporator blower fans, along with the compressor.

Temperature-Sensing Bulbs

Thermostatic control is a form of motor control commonly used in HVACR systems. A sensing bulb is often used to detect temperature. A ***sensing bulb*** is a device that reacts to heat by changing its internal pressure. The sensing bulb is connected by a capillary tube to a diaphragm or bellows, **Figure 16-11**.

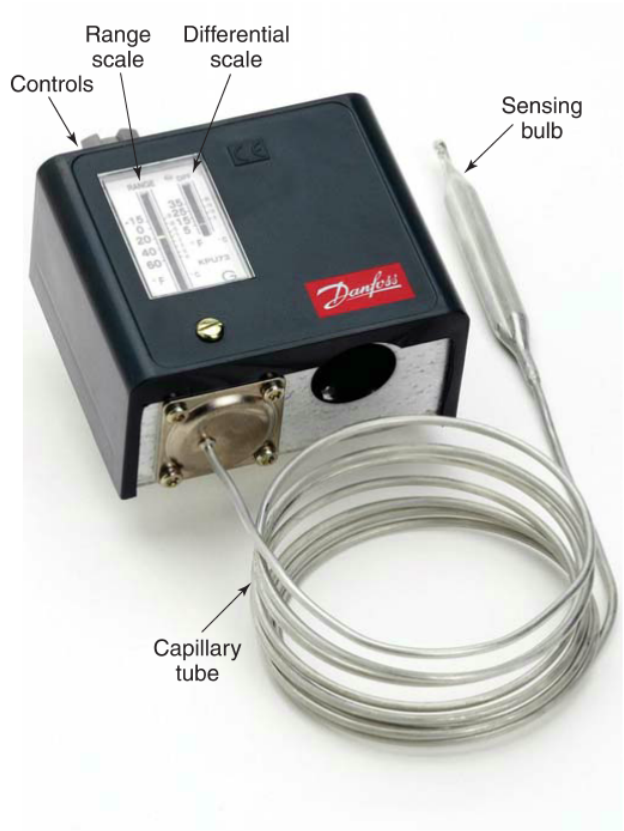

Danfoss

Figure 16-11. A thermostatic motor control that uses a sensing bulb to detect temperature.

The sensing bulb and capillary tube are charged with a volatile fluid. A ***volatile fluid*** is a fluid that vaporizes into a gas at a low temperature. As the bulb becomes warmer, the volatile fluid vaporizes and expands into a gas. By expanding as a gas, the fluid increases the pressure inside the bulb and expands the bellows or diaphragm, **Figure 16-12**.

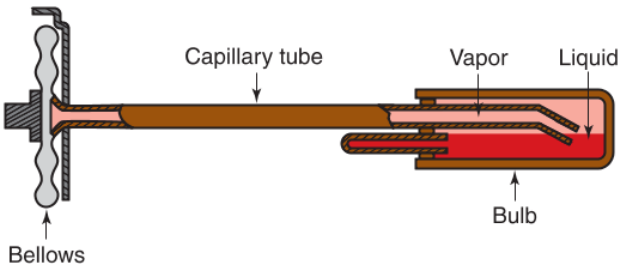

Ranco, Invensys Climate Controls Americas

Figure 16-12. The fluid inside a temperature-sensing bulb expands when it vaporizes and contracts when it condenses, which causes the bellows to expand and contract as well.

Copyright Goodheart-Willcox Co., Inc.

As a sensing bulb cools, the fluid condenses back into a liquid. Since the liquid form takes up less space, the pressure decreases, and the bellows or diaphragm contracts. The sensing bulb is typically positioned in the system so it is in contact with the evaporator and can react to temperature changes there.

Remote Temperature-Sensing Elements

Remote temperature-sensing elements are devices that react to temperature change and send a signal to control devices. Among the fluid-filled elements that translate a change in temperature to a change in pressure, there are two common types:

- Above-atmospheric-pressure element—controls refrigeration temperatures.
- Below-atmospheric-pressure element—controls heating units.

An ***above-atmospheric-pressure element*** is used for controls that *close* the electrical circuit on temperature rise. According to the combined gas law, in a fixed volume, a rising temperature causes pressure to rise. When the pressure inside the element moves the diaphragm or bellows far enough, it turns the switch on. As it cools, it turns the switch off. If an above-atmospheric-pressure element loses its charge, it will not be able to activate the switch due to its lack of pressure. Therefore, the refrigeration unit is unable to start. If all of the volatile fluid has leaked from the element, it cannot exceed atmospheric pressure, which means it will not be able to move the diaphragm or bellows to turn on the switch.

A ***below-atmospheric-pressure element*** is used for controls that *open* the electrical circuit on temperature rise. Below-atmospheric-pressure elements are found on electric heating and electric defrost units. These elements contain volatile fluid in a partial vacuum. As the temperature around the element increases, the bellows or diaphragm expands and opens the circuit. At a certain temperature, the controls turn off the circuit.

A below-atmospheric pressure element is designed to open as temperature rises. This prevents heating coils from overheating and acts as a safety device. In a refrigeration system, a below-atmospheric-pressure element can be used to stop the motor if the condensing temperature rises too high. If a below-atmospheric-pressure element is damaged and becomes open to atmospheric pressure, the bellows or diaphragm will be unable to contract due to loss of vacuum. Since the element is in a partial vacuum, atmosphere will leak *into* the element, raising its pressure. This higher pressure will keep the circuit open.

Switching Devices Used with Sensing Bulbs

As previously described, a thermostatic motor control with a sensing bulb usually has a bellows or diaphragm that opens and closes a set of contact points. These contact points must open and close rapidly. If the contact points were to open very slowly, there would be electric arcing as the current jumps across the tiny gap. This arcing action would very quickly burn the contact points, ruining their ability to make a good electrical connection. There are two primary ways to get the contact points to snap open and closed rapidly. One way is to use a spring toggle mechanism. The second is to include a permanent magnet in the contact assembly. See **Figure 16-13**.

In a toggle mechanism, the fulcrum points are under pressure from a spring. This tends to pull them together. As the sensing bulb warms, the bellows expands. This moves the toggle point downward. The instant the toggle point passes the center position, it will snap into the lower position. When the toggle point is in the lower position, the spring force acts to push the contacts together rather than hold them apart. This closes the contact points quickly, preventing arcing.

As the sensing bulb cools, its pressure reduces, so the bellows contracts. This lowers the lever and moves the toggle point upward again. As soon as the toggle point passes the center point, the spring snaps open the contact points very quickly. An adjusting screw controls the spring pressure that pulls the fulcrum points together. Increasing this pressure will lengthen the motor's run time.

In a system with magnet snap action, the contact points are mounted on a bar made of a magnetic metal, such as iron. As the sensing bulb warms, increasing pressure in the bellows moves the contacts closer together. The permanent magnet also tries to draw the iron bar toward it. The magnetic effect increases as the iron bar approaches the magnet. When the bar is close enough, the magnet pulls the bar in with a snap action, which quickly closes the contact points.

Pulling the contact points apart takes enough force to overcome the magnet's strength. As the sensing bulb cools and the bellows contracts, the decreasing pressure of the bellows must exert enough force to pull the iron bar away from the magnet. Because the bellows are flexible, they can build up enough potential energy to overcome the magnetic force. As the bellows pulls down, the magnetic pull between the iron bar and magnet decreases rapidly, causing the contacts to snap open quickly. With this type of snap action, a motor's run time can be shortened by moving the magnet away from the iron bar. It can be lengthened by bringing the magnet closer to the iron bar.

Copyright Goodheart-Willcox Co., Inc.

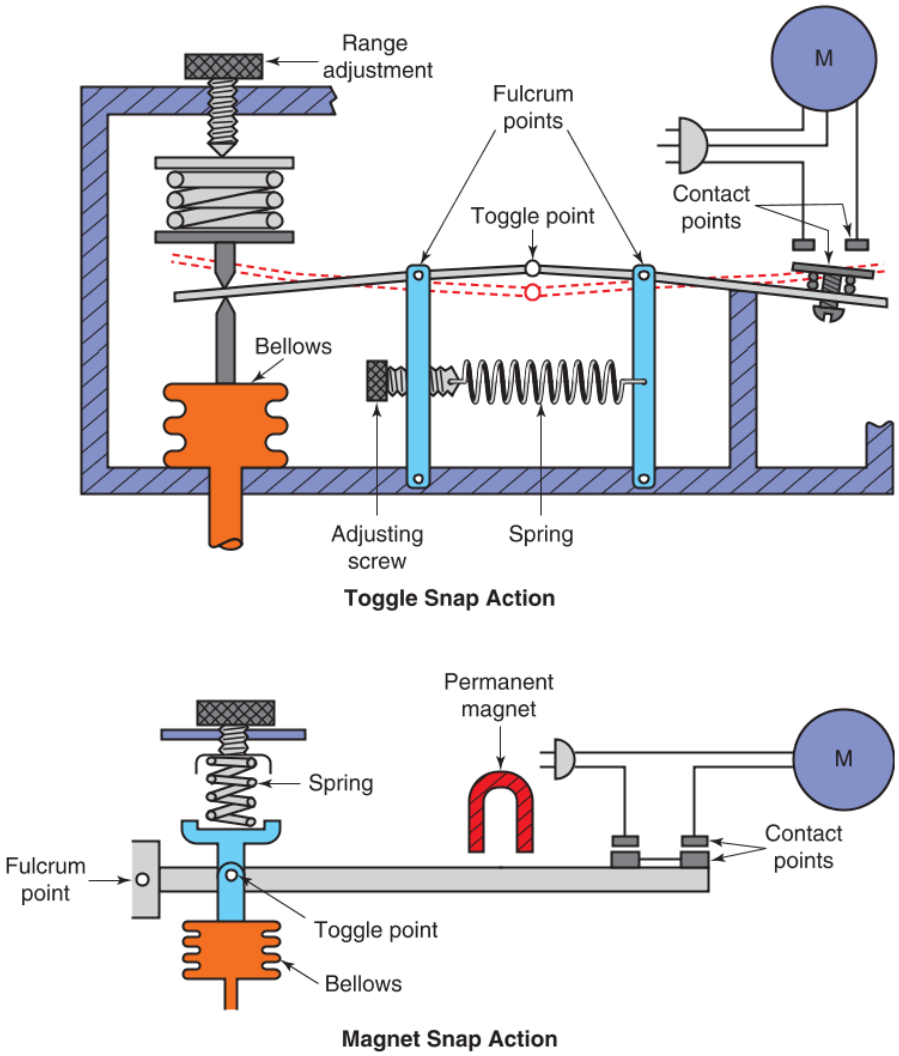

Goodheart-Willcox Publisher

Figure 16-13. These detail drawings show how a bellows can be connected to a snap-action motor control switch.

16.3.2 Bimetal Devices

Many thermostatic motor controls are composed of bimetal devices. A ***bimetal device*** consists of two different metals bonded together and formed into a particular shape. Two metals that are commonly used are copper and steel. Copper has a greater coefficient of expansion than steel. This means that as temperature increases, copper expands more than steel expands. This causes a bimetal device to bend as temperature rises. As temperature drops, the bimetal device returns to its original shape. If it is cooled further, the bimetal device begins to bend in the opposite direction.

Bimetal Strip

A popular form of bimetal device is the ***bimetal strip***. This strip reacts to different heat conditions, as shown in **Figure 16-14**. With contacts added to the ends, a bimetal strip can act as a heat-activated switch. As the bimetal strip reacts to temperature, it opens and closes the contact points of an electrical circuit.

Bimetal Coil

Another type of element commonly used in temperature controls is the ***bimetal coil***. These are often mounted with a mercury switch on one end to open and close a circuit when certain set points are reached, **Figure 16-15**.

Thermostats with bimetal coils and mercury switches are being replaced with electronic controls due to the hazardous nature of mercury. As the air surrounding the coil gets warmer, the coil expands so that it bends outward. The bending coil tilts the mercury switch to one side, and the mercury slides to the lower end of the bulb.

Copyright Goodheart-Willcox Co., Inc.

The mercury serves as the electrical contact between the middle wire (common) and the air-conditioning contact. This turns on the air conditioning. If the conditioned space becomes too cold, the coil contracts, tilting the bulb in the other direction. The mercury then forms an electrical contact between the common and the furnace contact. This turns on the heating.

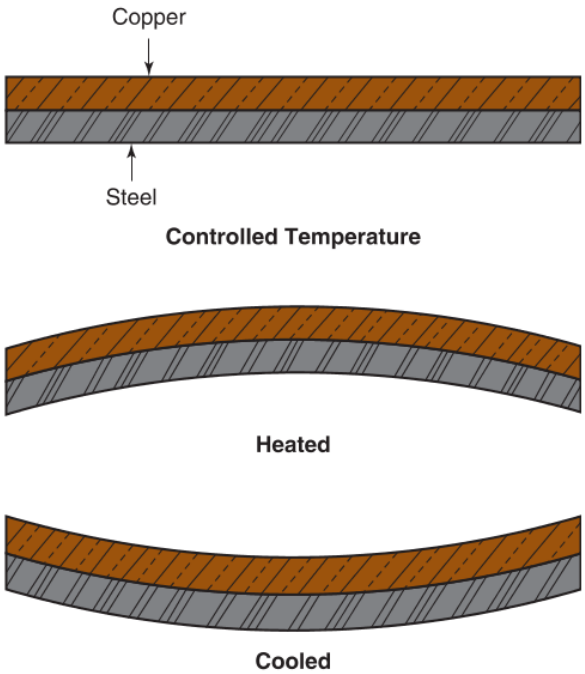

Goodheart-Willcox Publisher

Figure 16-14. A bimetal strip bends or warps with temperature change.

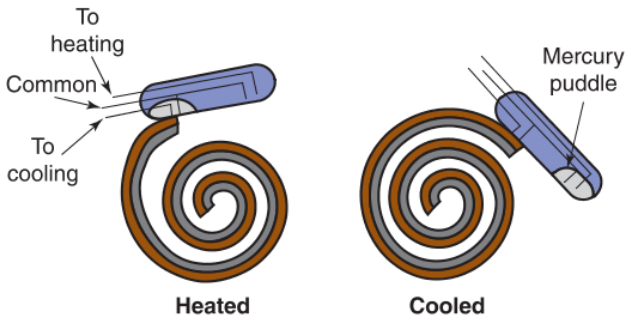

Goodheart-Willcox Publisher

Figure 16-15. A bimetal coil contracts and expands depending on the temperature. The attached mercury switch engages the furnace or cooling unit when tilted.

Pro Tip

Heating and Cooling Modes

Many heating and cooling thermostats have a function that allows the user to select either cooling mode or heating mode. This prevents the system from switching between the two modes of operation. For example, when in cooling mode, the air conditioning will run until the bimetal coil contracts. However, the heating will not turn on, because the thermostat is only set for cooling mode. The user would need to select heating mode before the thermostat would turn on the heating.

Bimetal Disc

Another common bimetal device, called the ***bimetal disc***, consists of a dished (concave) disc composed of two metals. Its construction is such that the disc is dished in one direction when it is cold. As it warms, it suddenly snaps into a dished position in the other direction, **Figure 16-16.**

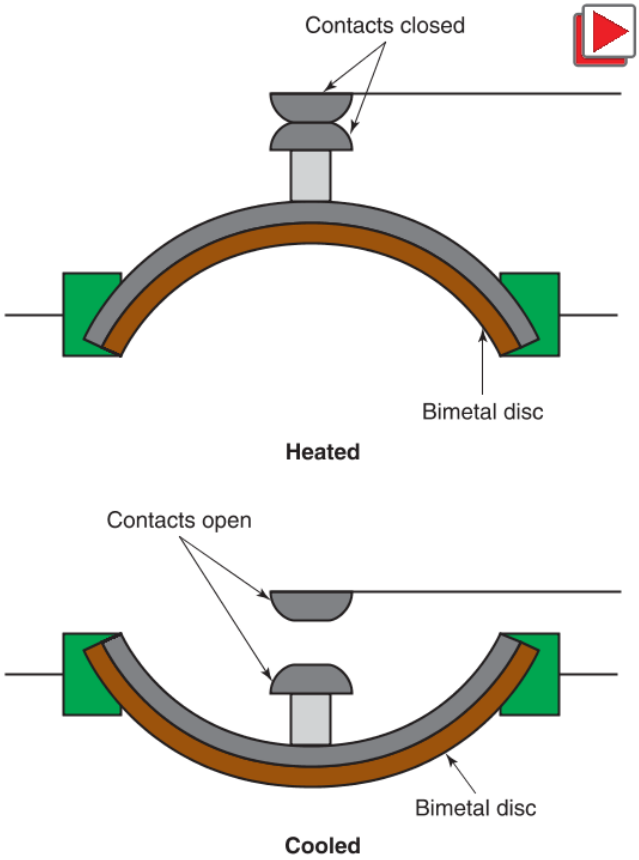

Goodheart-Willcox Publisher

Figure 16-16. A bimetal disc can be used to open or close a set of contacts as it snaps from one position to another, depending on whether it is heated or cooled.

Copyright Goodheart-Willcox Co., Inc.

Bimetal discs are often used as safety switches, such as in furnaces as a high-limit switch or a flame rollout switch. Bimetal discs provide fast snap action switching, may have adjustable calibration, and can operate with a small, effective temperature differential, **Figure 16-17**.

16.3.3 Electronic Temperature Sensors

Electronic temperature sensors have several advantages over other sensors, including their compact size, reliable performance, rapid response, and absence of moving parts. Electronic sensors generally operate at a lower voltage (5 V to 15 V) provided by a step-down transformer and rectifier or batteries, **Figure 16-18**.

The sensing device in an electronic temperature sensor is usually a thermistor. The thermistor probe can be placed in an airstream to measure air temperature or strapped to tubing to read the outside of the tubing's temperature. Remember that a thermistor is a device in which the resistance varies as the temperature varies. If a thermistor's resistance decreases as the temperature increases, the thermistor has a negative temperature coefficient (NTC). If a thermistor's resistance increases as temperature increases, it has a positive temperature coefficient (PTC).

Electronic thermistors have the ability to accurately sense extremely high and low temperatures. These devices are useful for measuring temperatures where conventional methods do not work. Thermistors are often used in HVACR units to provide temperature feedback to the system controller and to remotely monitor temperature in a system. Changes in a thermistor's resistance are detected by an electronic circuit called a ***Wheatstone bridge***. As the resistance changes due to temperature change, the resistances in the bridge become unbalanced. This causes the output voltage of the bridge to change. The output voltage can be amplified to signal the controller. The signal to the controller indicates the action that needs to be taken.

16.3.4 Pressure Motor Controls

A low pressure must be maintained within an evaporator so that refrigerant can evaporate at a low temperature. This principal shows how a ***pressure motor control*** may be used to regulate compressor motor operation based on pressure measurements in the system. A pressure motor control is often used on commercial systems. It connects into the suction side of the compressor to monitor evaporator suction pressure. A low-pressure motor control is shown in **Figure 16-19**.

With the system off, the evaporator warms, and the low-side pressure increases, which expands the bellows. Eventually, this causes the contacts to close and the compressor's motor to start. When low-side pressure drops low enough, the bellows contracts, and the contacts open, turning off the motor.

Cut-out and cut-in settings determine both differential and range. The spring inside the control is under compression and presses on the bellows at all times.

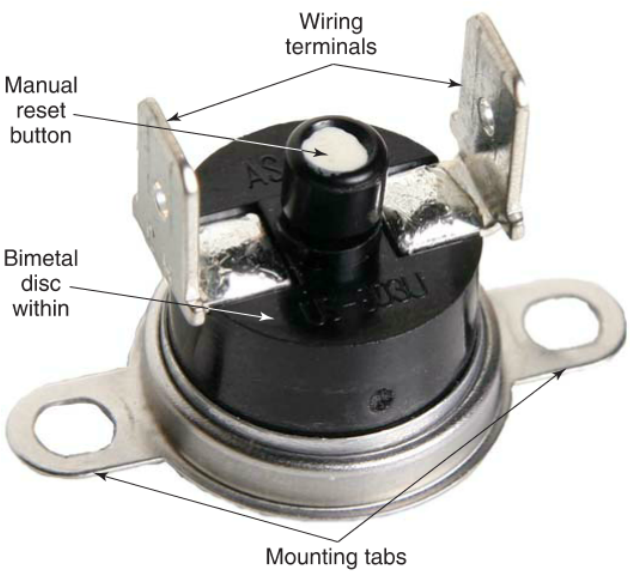

Selco Products Company

Figure 16-17. A bimetal disc packaged as a safety switch.

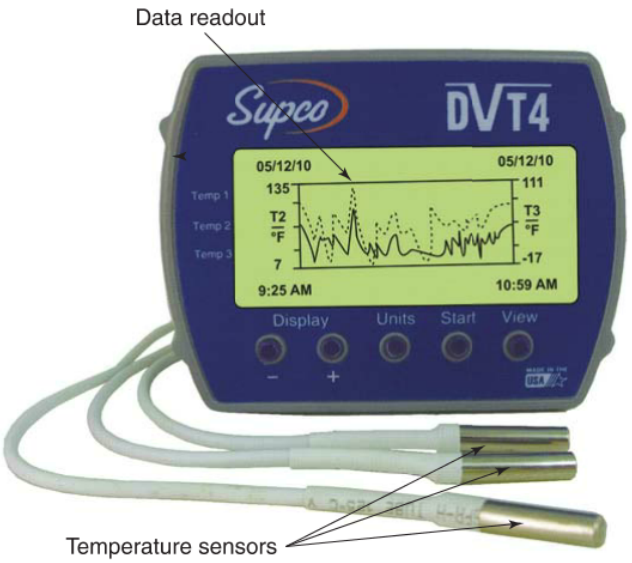

Sealed Unit Parts Co., Inc.

Figure 16-18. This datalogger uses multiple electronic temperature sensors to collect data over a period of time.

Copyright Goodheart-Willcox Co., Inc.

Range adjustment lowers both the cut-in and the cut-out an equal distance if the screw is turned out (counterclockwise). Cut-in and cut-out pressures are both raised if the screw is turned in (clockwise). Differential adjustment affects only the cut-out. Differential adjustment raises the cut-out pressure when the screw is turned in (clockwise). The increased spring tension makes it harder for the bellows to reach its cut-out setting. Turning the screw counterclockwise decreases spring tension, lowering the cut-out pressure. The spring has no effect on the cut-in setting.

Some models of pressure control are also equipped to act as a safety device for the motor. For example, a bellows construction with a pressure tap to the high-pressure side of the compressor may be used. If head pressure or high-side pressure rises too high, the bellows will expand. This movement opens the motor circuit and stops the motor. Such a control is especially necessary when the system has a water-cooled condenser. The following forms of pressure motor control are the most common:

- High-pressure motor control.
- Low-pressure motor control.
- Oil pressure motor control.
- Low-pressure safety control.

High-Pressure Motor Controls

One of the most harmful things that can happen to a hermetic system is to have high head pressure. High head pressure raises the temperature of the refrigerant vapor and oil moving past the compressor exhaust valve. When too hot, this may cause oil and refrigerant breakdown. This condition is worsened if moisture or dirt is present, which can result in carbon, acids, and sludge forming.

A ***high-pressure motor control*** is a safety control device used to turn off the compressor before dangerously high pressure is reached. The high-pressure motor control is connected to the compressor outlet, before the condenser. If the pressure exceeds a certain set point, the control shuts off current to the motor. This is most often achieved using an electric switch

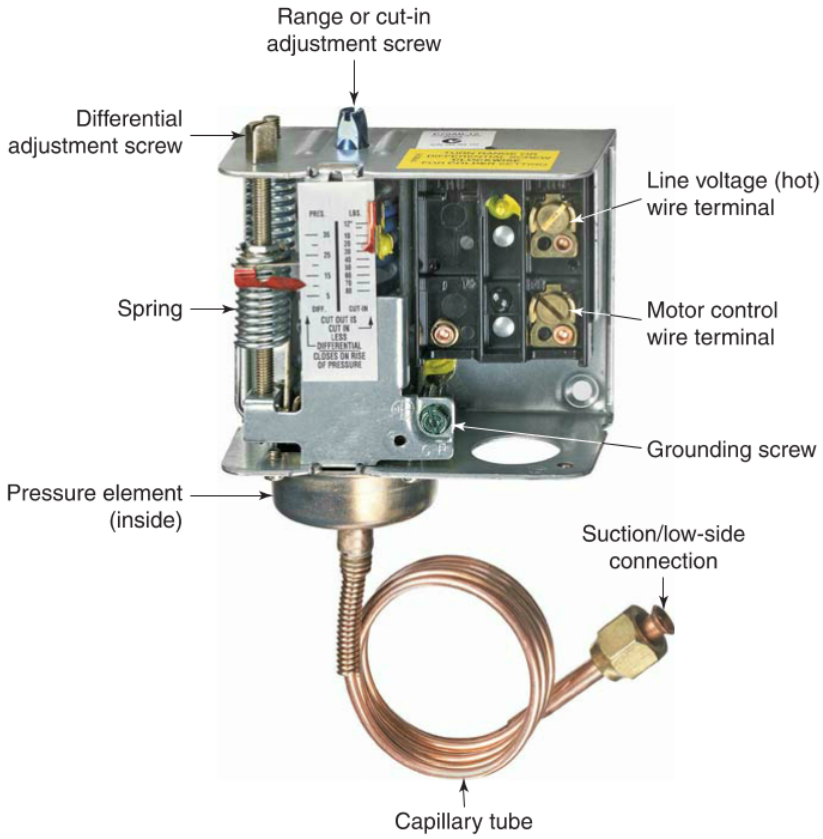

Johnson Controls, Inc.

Figure 16-19. The internal construction of a pressure motor control. The bellows connects to the low-side of the system through the control's capillary tube.

Copyright Goodheart-Willcox Co., Inc.

operated by a pressure element sensing head pressure at the compressor's head or discharge, **Figure 16-20**.

A high-pressure motor control is used for safety, not for normal system operation. For normal operation, a thermostat or low-pressure control should normally cycle the compressor on and off. A high-pressure motor control protects the compressor from the dangers of high pressure and high temperature, but it also protects the compressor's motor from overheating and overloading, as higher head pressure requires a higher current draw for the compressor to pump against. This safety control is usually set to cut out at 20% above normal head pressure, **Figure 16-21**.

The following are several conditions that can cause high head pressure and may result in compressor shutdown:

- Lack of air circulation through an air-cooled condenser (burned out fan motor, frozen relay, blocked airway, etc.).
- Lack of water flow through a water-cooled condenser.
- Dirty condenser coils.
- Increased refrigeration load.

High-Pressure Safety Cut-Out Pressures for Common Refrigerants

Refrigerant	Pressure Setting (psi)
R-12	150–160
R-22	260–270
R-134a	36–110
R-500	190–200
R-502	280–290

Goodheart-Willcox Publisher

Figure 16-21. Table of high-pressure safety cut-out pressures for different refrigerants.

Setting a High-Pressure Safety Cut-Out for a Pressure Motor Control

1. Locate the high-side cut-out (typically on the right side of switch controls).
2. Adjust the high-side cut-out by turning clockwise to raise the cut-out set point.

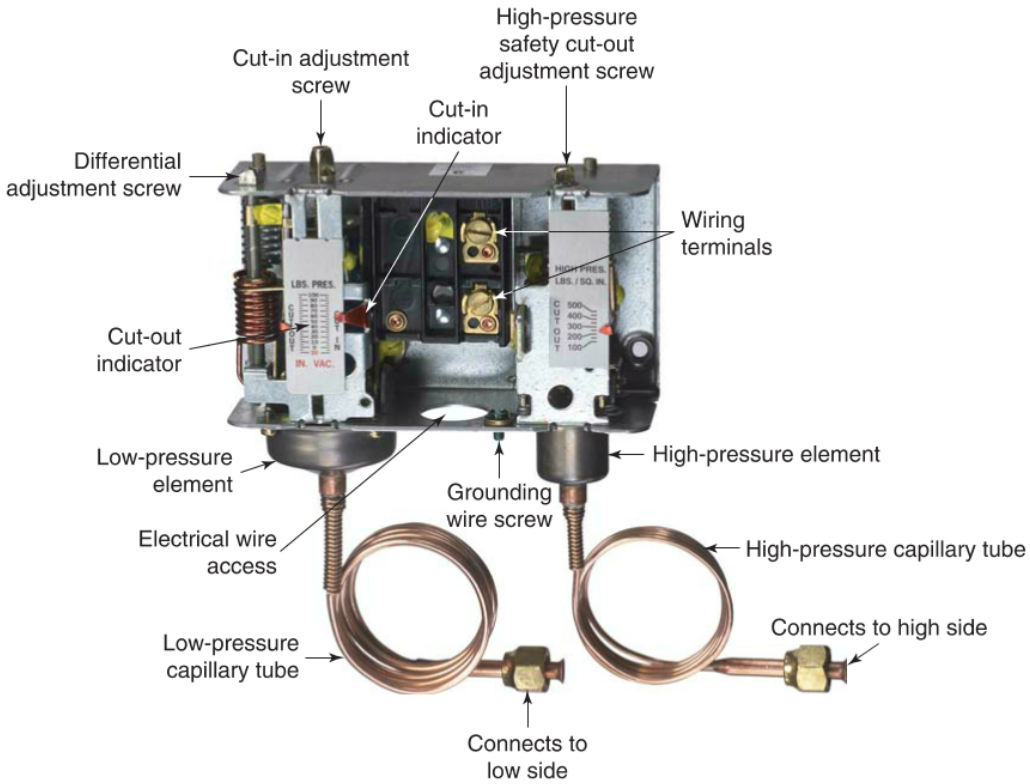

Johnson Controls, Inc.

Figure 16-20. The internal construction of a pressure motor control. The bellows connects to the low-side of the system through the control's capillary tube.

Copyright Goodheart-Willcox Co., Inc.

3. Cycle the equipment at least three times at normal operational conditions and monitor with a pressure gauge to verify correct settings and correct operation.

Low-Pressure Motor Controls

A ***low-pressure motor control*** is a control device that reacts to the low-side pressure it senses by closing an electric switch on a rise to a preset pressure (cut-in setting) and opening that switch on a drop to a preset pressure (cut-out setting). It measures compressor suction pressure. The cut-out and cut-in pressures are set to maintain proper evaporator temperature. The low-pressure motor control regulates compressor operation to maintain a specific low-side pressure that corresponds to the desired evaporator temperature. Remember that the temperature of a refrigerant inside an evaporator or condenser can be determined by taking a pressure measurement and finding its corresponding temperature value on a P/T chart for the type of refrigerant in the system.

A low-pressure motor control can also function as a safety device. The cooling of a hermetic compressor depends on the pressure and temperature of the suction vapor. Low vapor pressure is indicative of not enough vapor flowing, so the compressor may overheat and burn out. Low pressure can be caused by a low refrigerant charge in the system, restricted refrigerant flow, or a refrigerant leak. When evaporator pressure drops, a low-pressure motor control opens the motor circuit and shuts off the compressor motor before it is damaged. The protection pressure setting should be below the normal cut-out setting to avoid a disruption in normal operation, and it should be above atmospheric pressure to avoid allowing the evaporator to go into a vacuum. A diagram for a low-pressure motor control is shown in **Figure 16-22**.

Low-pressure motor controls have range and differential adjustments. The range is determined by the cut-in and differential settings. These settings vary depending on the application. Cut-out pressure should be a pressure that corresponds with a temperature that is about 10°F (6°C) below the desired evaporator outside surface temperature. Cut-in pressure should correspond with a temperature that is about the same as the highest allowable evaporator temperature. **Figure 16-23** shows some common low-pressure motor control settings for different applications.

Below are procedures for setting the range on a pressure motor control. Note the manufacturer's instructions should be followed, as some units require turning the screw in the opposite direction rather than as noted here. Also, newer units may have an automatic reset control with a simple button.

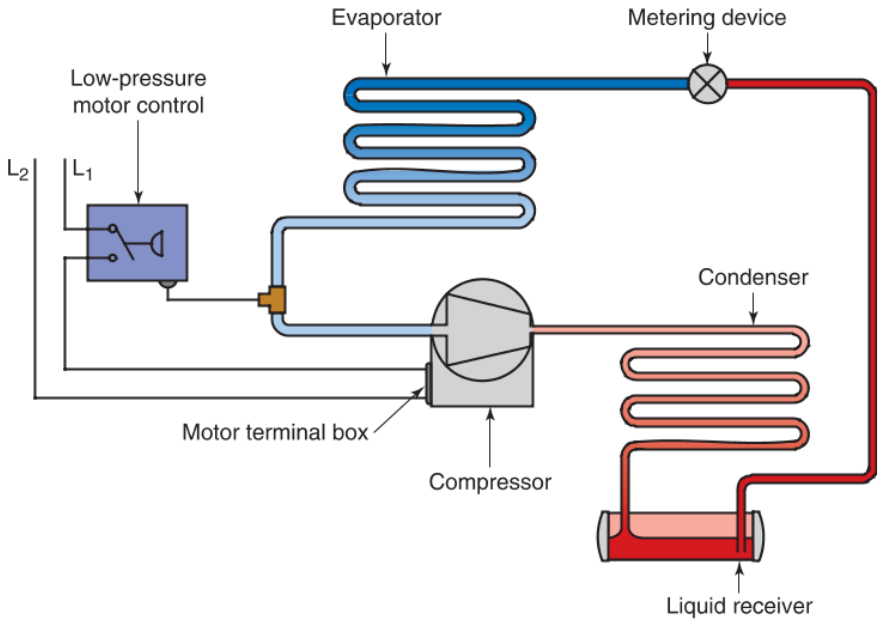

Goodheart-Willcox Publisher

Figure 16-22. This diagram shows a low-pressure motor control installed on the low side of a refrigeration system.

Copyright Goodheart-Willcox Co., Inc.

Low-Pressure Control Settings										
Application	Temp range	Evap Temp Difference	R-22		R-134a		R-404A		R-507	
			Out	In	Out	In	Out	In	Out	In
Beverage cooler	35°F to 38°F	15°F	41 psi	66 psi	17 psi	33 psi	53 psi	82 psi	56 psi	86 psi
Floral cooler										
Produce cooler										
Smoked meat cooler	32°F to 35°F	15°F	38 psi	62 psi	15 psi	30 psi	49 psi	77 psi	52 psi	81 psi
Meat reach thru										
Service deli										
Seafood										
Multi-deck fresh meat	26°F to 29°F	15°F	32 psi	54 psi	11 psi	25 psi	42 psi	68 psi	44 psi	71 psi
Frozen glass door	–10°F to 0°F	10°F	9 psi	24 psi	—	—	15 psi	33 psi	16 psi	35 psi
Frozen walk-in										
Frozen ice cream	–30°F to –20°F	10°F	0 psi	10 psi	—	—	3 psi	16 psi	4 psi	18 psi
Frozen food – open type										

Tecumseh Products Company

Figure 16-23. Table showing low-pressure motor control settings for some typical refrigeration applications.

Setting the Range on a Dual Pressure Motor Control

1. Identify the low-side range screw (typically on the left side of a switch control).
2. Turn the low-side range screw clockwise to raise the cut-in set point.
3. Adjust the differential screw. Note turning clockwise raises the cut-in set point.
4. Identify the high-side cut-out screw (typically on the right side of a switch control).
5. Adjust the high-side cut-out by turning clockwise to raise the cut-out set point.
6. Cycle the equipment at least three times at normal operational conditions. Monitor with a pressure gauge to confirm correct settings and correct operation.

A low-pressure motor control's differential setting will vary, depending on the temperature accuracy required. A wide pressure difference allows some variation in the cabinet temperature. It also lengthens the operating cycle interval of the condenser. This means the compressor does not run as often. A smaller differential setting maintains a more uniform cabinet temperature. The unit then runs more often. Pressure difference between cut-in and cut-out point varies with the refrigerant used. Common pressure difference is about 22 psi for R-22, 20 psi for R-401A, 20 psi for R-404A, and 16 psi for R-134a.

In multiple-evaporator commercial systems, low-pressure motor controls are used quite often for two reasons:

- The low-side pressure is an indication of the temperature in the evaporators.
- One control works well regardless of the number of evaporators connected to it.

Copyright Goodheart-Willcox Co., Inc.

Oil Pressure Motor Controls

Some larger units use a safety control connected to the compressor's lubrication system. This control shuts off the compressor motor if the oil pressure decreases or if the oil pressure falls below a predetermined safe pressure above the low-side pressure.

Oil pressure motor control units are similar in construction to low-pressure motor controls, but usually have a fixed or nonadjustable differential. There are two types of oil pressure motor controls. One type operates on a mechanical differential that has one connection to the oil pump and one connection to the low-pressure side, **Figure 16-24**. The second type is a pressure-sensing electronic unit. It is connected to the lubrication system at the oil pump outlet.

Below is a list of factors that may cause an oil pressure motor control to trip open:

- Incorrect oil level in the compressor.
- Improper tubing size.
- Unbalanced system.
- Low refrigerant charge.
- Refrigerant migration.
- Control is set improperly.
- Electrical problems.
- Compressor malfunctions.

Danfoss

Figure 16-24. This differential oil pressure control shows its two connections: low-pressure and oil pump.

Low-Pressure Safety Control

A ***low-pressure safety control*** consists of a pressure-sensitive element, such as a diaphragm or bellows, used to operate a switch. Unlike a low-pressure *motor* control, a low-pressure safety control is not set to maintain a specific evaporator temperature. Rather, it is set to shut down or lock out the compressor in the event of refrigerant loss (suction pressure dropping too low) or an evaporator freeze-up. This safety control may include a low-pressure line connected to a mechanical switch (much like a low-pressure motor control), or it may be a pressure transducer electrical switch that is connected into the suction line, as shown in **Figure 16-25**.

When low-side pressure drops below the desired limit, the low-pressure safety control opens the electrical circuit, which switches off the compressor motor. Some low-pressure safety controls operate a relay, which controls the electrical circuit.

6

16.3.5 Motor Starting Relays

Many of the motor controls described in this chapter start and stop motors by sending a signal to energize a relay. When the relay is energized, it responds by opening or closing contacts. Aside from providing power directly to motors, relays can also be used to open and close contacts that add start windings, start capacitors, or both start windings and start capacitors to the motor circuit, providing more torque for starting. After start-up, these additions are often dropped out of the circuit. To operate correctly, a relay must have the right characteristics. When replacing a relay,

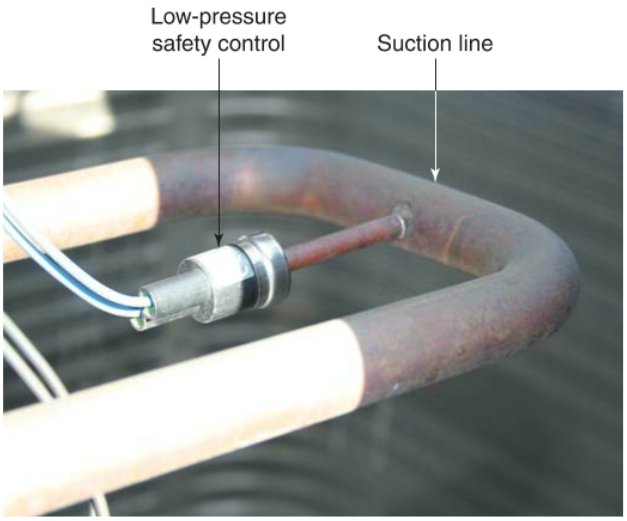

Goodheart-Willcox Publisher

Figure 16-25. This low-pressure safety control contains a switch that opens the compressor circuit if low-side pressure drops below the pressure set point.

Copyright Goodheart-Willcox Co., Inc.

a technician must use a new relay that has the same electrical specifications as the original.

There are several different kinds of motor starting relays divided into two different categories:

Electromagnetic:

- Current.
- Potential.
- Contactors (or motor starters).

Electronic:

- Solid-state.
- Positive temperature coefficient (PTC).

Current Relays

Current relays are relays that are activated by a single-phase motor's high starting current running directly through a current relay's coil winding. Current relays are usually found on low-torque, low-horsepower motors and are used to close and open the start winding circuit. They are typically wired in series with the run windings of single-phase induction motors. The change in current flow through the run winding operates the current relay, **Figure 16-26**.

A current relay energizes and actuates its contacts when the high inrush of current at the beginning of motor operation flows through both the relay coil and the motor's run windings. Energized current relays close their normally open (NO) contacts, which brings additional components (motor windings or capacitors) into the circuit to provide more starting torque for the motor.

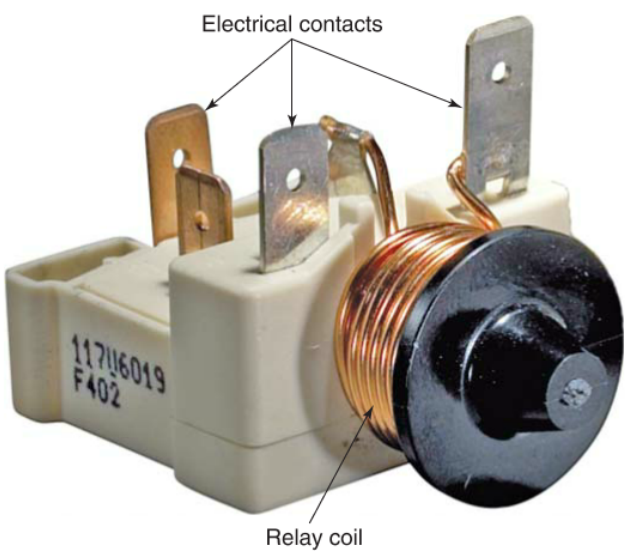

Danfoss

Figure 16-26. Current relays are often identified by their prominent relay coil.

A current relay is an electromagnet, much like a solenoid. Either a weight or a spring holds the start winding contact points open when the system is idle. When the motor control (thermostat or pressurestat) contacts close, high current flows through the motor's run winding. Because the current relay's coil is wired in series with the run winding, it becomes heavily magnetized. This lifts the weight or overcomes the spring force and closes the contacts to the start winding circuit, **Figure 16-27**.

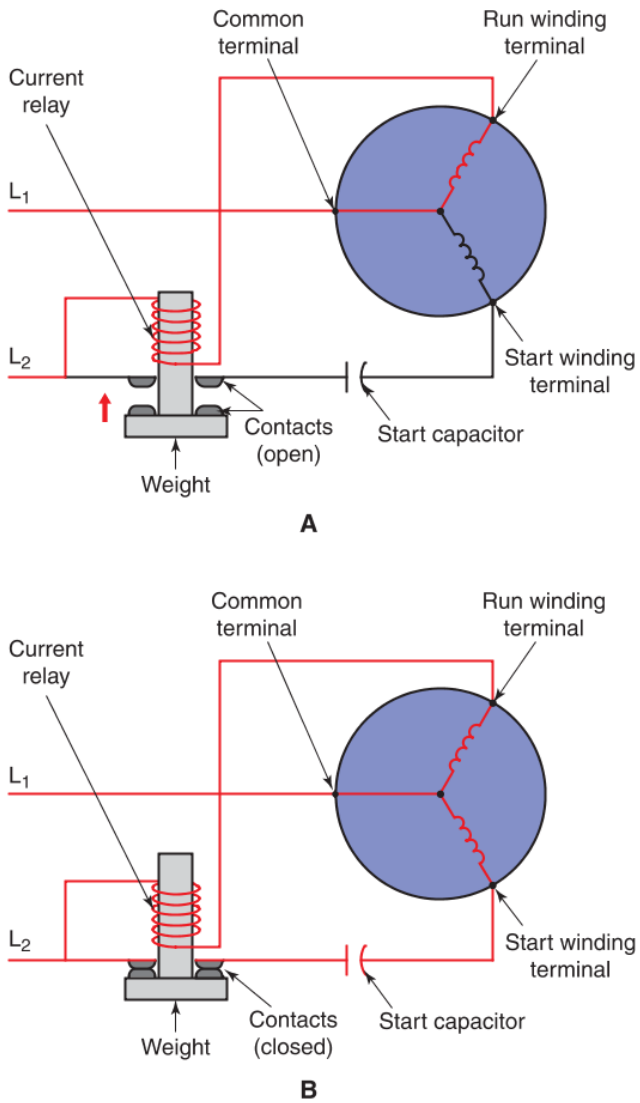

Goodheart-Willcox Publisher

Figure 16-27. A current relay controls the start winding circuit, but its coil is wired in series with the run winding circuit. A—When power is applied, the relay coil is energized, drawing the shaft upward to close the start winding circuit. B—With the relay contacts closed, current flows through both the run and start windings, providing the motor with more starting torque.

Copyright Goodheart-Willcox Co., Inc.

During starting, the motor will quickly accelerate to two-thirds or three-fourths of its rated speed. As it does so, the current draw of the motor's run winding decreases. This reduces the magnetic strength of the current relay. The decrease is enough to allow the weight or the spring to open the start winding contact points. **Figure 16-28** shows a current relay in the closed (starting) position and in the open (running) position.

Current relays are sometimes called *amperage relays* and are available in a number of capacities (amperage range). It is the ampere draw on the circuit that operates the relay. The difference between closing amperage and opening amperage settings is small. One type of current relay uses a rotary solenoid. This type can be mounted in any position, whereas a weight-operated relay must be mounted in a level position. A common method of mounting a current relay is shown in **Figure 16-29**.

Current relays have three main terminals, marked L (line voltage), M (main winding), and S (start winding). Between L and S is a normally open (NO) contact. Between L and M is the relay coil. A current relay is wired by connecting an ungrounded (hot) wire to the L terminal. Terminal M is connected to the run winding (R) terminal of a motor. The type of motor being wired determines the next wire connection. Terminal S can be connected to either the start winding terminal of a motor or a capacitor that is wired to the start winding terminal. **Figure 16-30** shows a wiring diagram for a motor with a current relay.

Pro Tip

Relay Terminals

Always check wiring diagrams for relays. Some relays may have additional terminals to control more than one motor or other components.

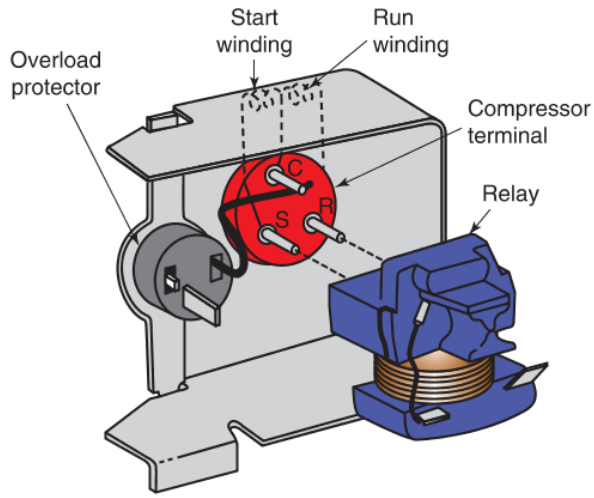

Frigidaire

Figure 16-29. Connecting a current relay to a compressor terminal.

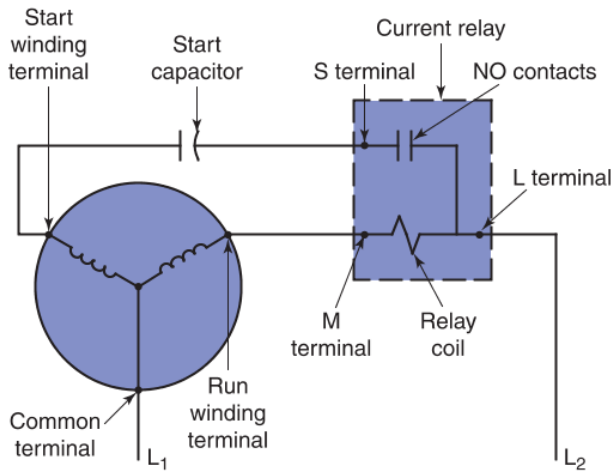

Goodheart-Willcox Publisher

Figure 16-30. Wiring diagram of a motor using a current relay.

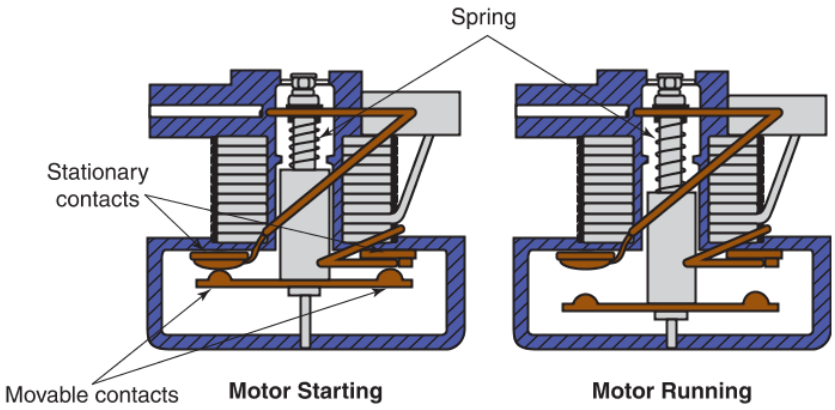

Frigidaire

Figure 16-28. A current relay is in the closed position during motor start-up and the open position during full-speed operation.

Copyright Goodheart-Willcox Co., Inc.

Checking a Current Relay

An HVACR technician must be able to tell if a current relay is operating properly. With a few measurements, a technician can test for proper relay operation. These tests can be done on a new or used current relay.

1. If the relay is installed in a system, disconnect it from the system. No power can be applied to the relay when it is being tested with an ohmmeter.
2. Check to see if the relay is weight operated. If so, be sure that it is right-side up in a level position. It cannot be upside-down or sideways.
3. Set the range switch for the ohmmeter to its lowest setting (×1 or ×10).
4. If possible, review the relay's wiring diagram and manufacturer data sheet to verify the terminal locations for the coil and contacts.
5. Measure the resistance of the coil by clipping the ohmmeter leads to terminals L and M. It should read a very low resistance. A measurement of 0 Ω or close to 0 Ω means that the coil is fine. A reading of infinity (∞) means that the coil is open, and the relay must be replaced.
6. Measure the resistance of the contacts by clipping the ohmmeter leads to terminals L and S. Because current relay contacts are normally open (NO), the resistance should be infinity (∞). If the resistance is 0 Ω or close to 0 Ω, the contacts are shorted, and the relay must be replaced.

Potential Relays

Potential relays, also called *voltage relays*, are electromagnetic relays that actuate based on a single-phase motor's counter electromotive force (cemf). They are used to start single-phase, high-torque, capacitor-start motors in compressors, **Figure 16-31**.

The operation of a potential relay is based on increasing voltage in the form of cemf. The increase occurs as a motor approaches and reaches its rated speed. As the motor's rotor starts to turn, it creates a magnetic field. This magnetic field induces a voltage in the motor start windings known as counter electromotive force (cemf). As the motor reaches higher speed, the cemf rises to a sufficient amount to energize the potential relay's electromagnetic coil and disengage the start capacitor from the circuit.

Sealed Unit Parts Co., Inc.

Figure 16-31. A potential relay is shown here.

Figure 16-32 is a wiring diagram for a potential relay. It shows that a potential relay's coil is wired in parallel with a motor's start winding. Because a potential relay has normally closed (NC) contacts, the start winding and both capacitors are in the circuit immediately to help the motor begin turning. As the motor speed increases, the counter emf generated in the start winding reaches a certain voltage, which energizes

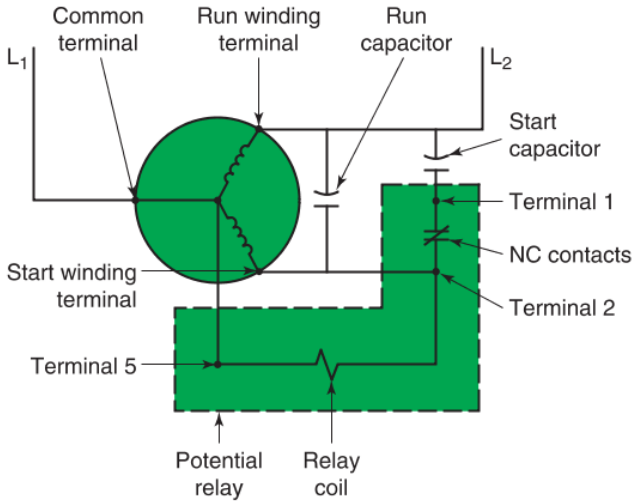

Goodheart-Willcox Publisher

Figure 16-32. Wiring diagram of a motor with a potential relay.

Copyright Goodheart-Willcox Co., Inc.

the relay coil across terminals 2 and 5. This opens the normally closed contacts across terminals 1 and 2. As a result, the start capacitor is dropped out of the circuit. When the motor is turned off, a potential relay's contacts again close and remain closed. This feature is its greatest advantage. If the points are closed as the thermostat closes the motor's power circuit, there is no arcing of the relay contact points, which occurs quite often in current relays.

The required voltage in the start winding necessary to energize the potential relay's coil is called ***pickup voltage***. Pickup voltage is typically generated when a motor reaches around three-fourths of its normal operating speed. Because a potential relay coil is connected in parallel with the start winding, the relay coil and winding share the same voltage but split the current. The relay coil is made of small wire, giving it a high resistance. The motor's start winding is made of larger wire, giving it a lower resistance. Therefore, most of the current flows through the lower-resistance start winding on start-up, leaving very little current to pass through the potential relay coil. This minimizes the heat produced in the relay coil as the motor starts. However, the coil's resistance must be low enough to open the contact points and remove the start capacitor from the circuit at the right time. If not, the motor will overheat.

Checking a Potential Relay

An HVACR technician must be able to tell if a potential relay is operating properly. With a few measurements, a technician can test for proper relay operation. These tests can be done on a new or used potential relay.

1. If the relay is installed in a system, disconnect it from the system. No power can be applied to the relay when it is being tested with an ohmmeter.
2. Set the range switch for the ohmmeter to a high setting (×100).
3. If possible, review the relay's wiring diagram and manufacturer data sheet to verify the terminal locations for the coil and contacts.
4. Measure the resistance of the coil by clipping the ohmmeter leads to terminals 2 and 5. The measurement should be around several thousand ohms; however, the measurements for different potential relays will vary. The resistance should *not* be low or infinity (∞). A low reading indicates a possible short in the coil, and infinity means that the coil is open.
5. Measure the resistance of the contacts by clipping the ohmmeter leads to terminals 1 and 2. Because potential relay contacts are normally closed (NC), the resistance should be 0 Ω or close to 0 Ω. A reading of infinity (∞) indicates that the contacts are stuck open. Dirty contacts or contacts burned from arcing may explain measurements above 0 Ω but below infinity (∞).

Contactors and Motor Starters

The electrical contacts on low-pressure motor controls and thermostats can safely carry a limited amount of electrical current. However, these same commercial pressure and temperature devices can control large motors with higher current loads through the help of two devices: contactors and motor starters. These devices operate in a manner similar to lower-current magnetic relays.

A ***contactor*** is a heavy-duty type of electromagnetic relay. Contactors can handle higher current than relays. They are larger than relays and can often be rebuilt or have parts replaced. The pickup coil that actuates the switching of the contacts can be replaced with another coil that operates at a different voltage. These may be 24 V, 120 V, 240 V, or whatever is available and convenient for a particular system, **Figure 16-33**.

Contactors are available in many different contact configurations, from a single set of contacts to five or

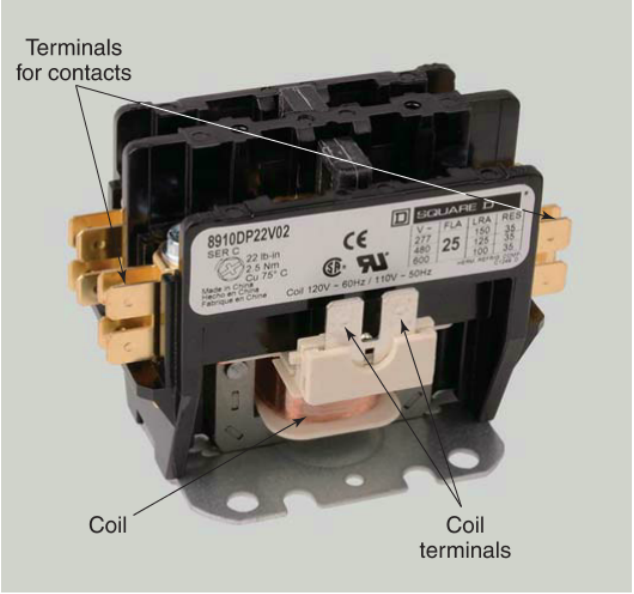

DiversiTech Corporation

Figure 16-33. A standard contactor used in HVACR.

Copyright Goodheart-Willcox Co., Inc.

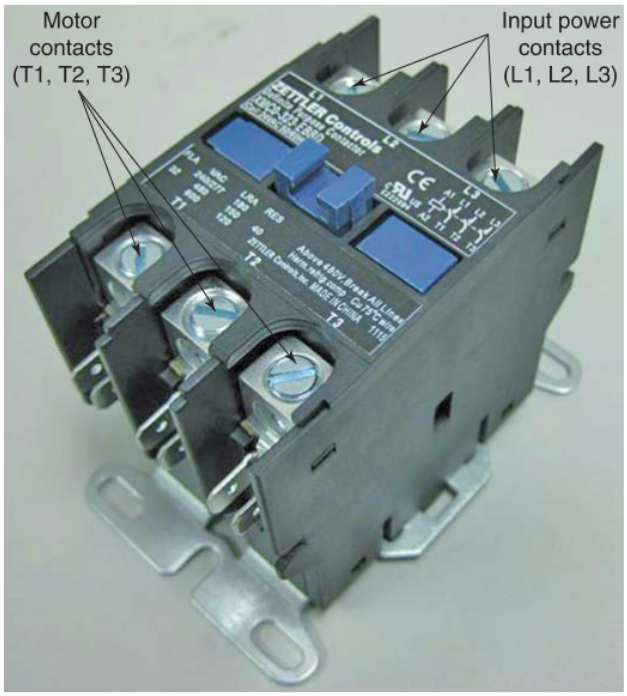

Zettler Controls, Inc.

Figure 16-34. This contactor is used to energize a three-phase motor.

six sets of contacts. Many residential air-conditioning systems use contactors with few sets of contacts to energize the compressor and the condenser fan motor. Contactors with three or four sets of contacts are used to control three-phase motor operation. Three-phase motors cannot use the starting relays that single-phase motors use. When a three-phase contactor is energized, the terminals on each side connect L1 to T1, L2 to T2, and L3 to T3, **Figure 16-34**.

A ***motor starter*** is similar to a contactor, but it has built-in overload protection. Overload protection devices are used to prevent motors from burning out or overheating. Unlike starting relays, both motor starters and contactors can be rebuilt. Thus, if a contactor or motor starter has burnt-out contacts or if the relay coil is shorted, a technician can just replace the contacts or coil instead of having to replace the entire contactor or motor starter, **Figure 16-35**.

For larger HVACR applications, pressure motor controls and thermostats signal a contactor or motor starter to energize a high-current motor. Contactor or motor starter operation begins when a motor control device sends an electrical signal. This signal energizes the electromagnet in a contactor. The energized magnet attracts the steel armature that holds the contactor's contacts. When this armature moves toward the magnet, it closes large contact points that safely carry the

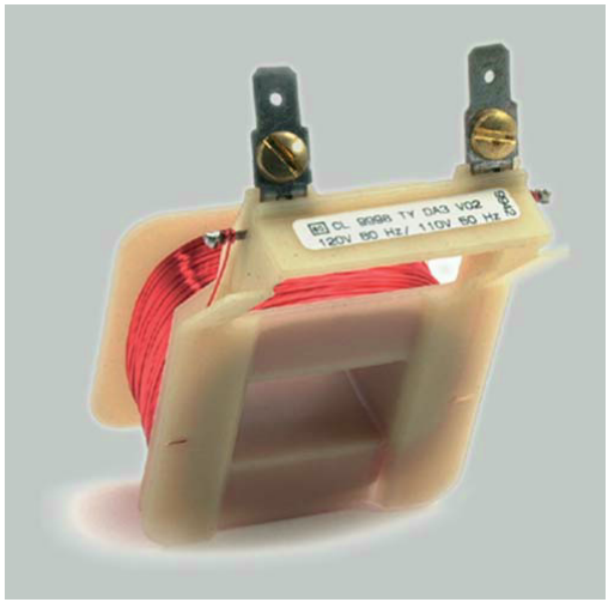

Replacement Coil

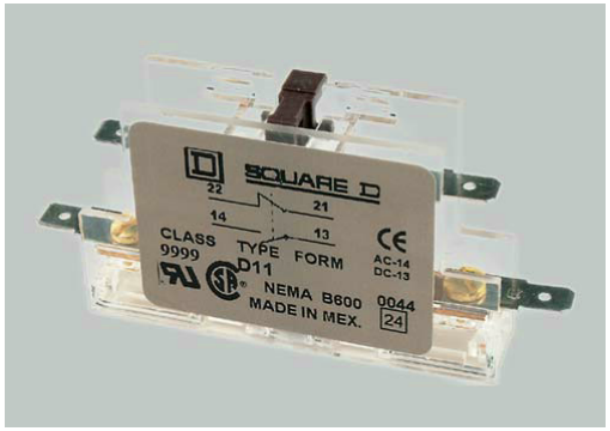

Replacement Contacts

DiversiTech Corporation

Figure 16-35. If certain components of a contactor are defective, install replacement components instead of replacing the entire contactor.

large current needed for the motor. **Figure 16-36** shows a wiring diagram of a contactor circuit.

Contactors and motor starters are mounted in an approved metal box with a safety access door. Motor starters often have a manual shutoff switch and fuses or an overload thermal safety breaker switch. The safety switch is operated by a heating element. This is located in the motor circuit black lead inside the contactor or motor starter. Should the motor demand too much current (shorts, grounds, or overloads), the heater will warm a thermal bimetal

Copyright Goodheart-Willcox Co., Inc.

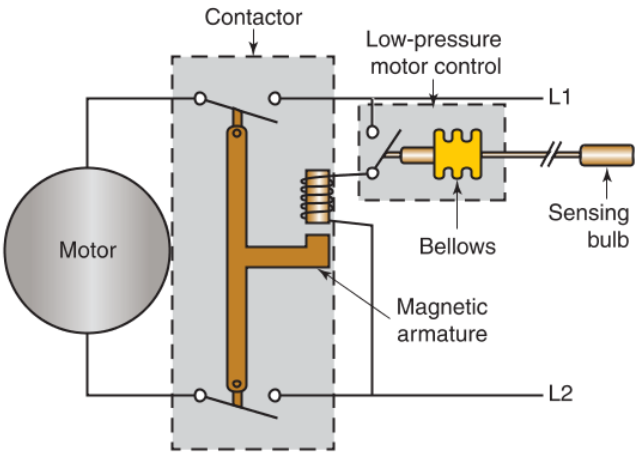

Goodheart-Willcox Publisher

Figure 16-36. Electrical diagram showing how a motor operating control, a contactor, and a motor are wired. This circuit allows high current flow through the motor and contactor's contacts without overloading the motor control's contacts.

strip in the control circuit until it bends. The bending movement will open the electromagnetic circuit, which will then open the main switch.

Figure 16-37 shows a wiring diagram of a 120–240 V single-phase system using a motor starter. The heavier lines indicate high-current power wiring, and the lighter lines indicate low-current control wiring. A wiring diagram for a three-phase system is shown in **Figure 16-38** and **Figure 16-39**.

Code Alert

Electrical Work

Electrical work should be done by a licensed electrician. The work should comply with local electrical codes. Most states adopt by reference the National Electrical Code (ANSI/NEPA standard 70), sometimes with local changes. Some also adopt by reference the National Electrical Safety Code (ANSI/IEEE standard C2).

6

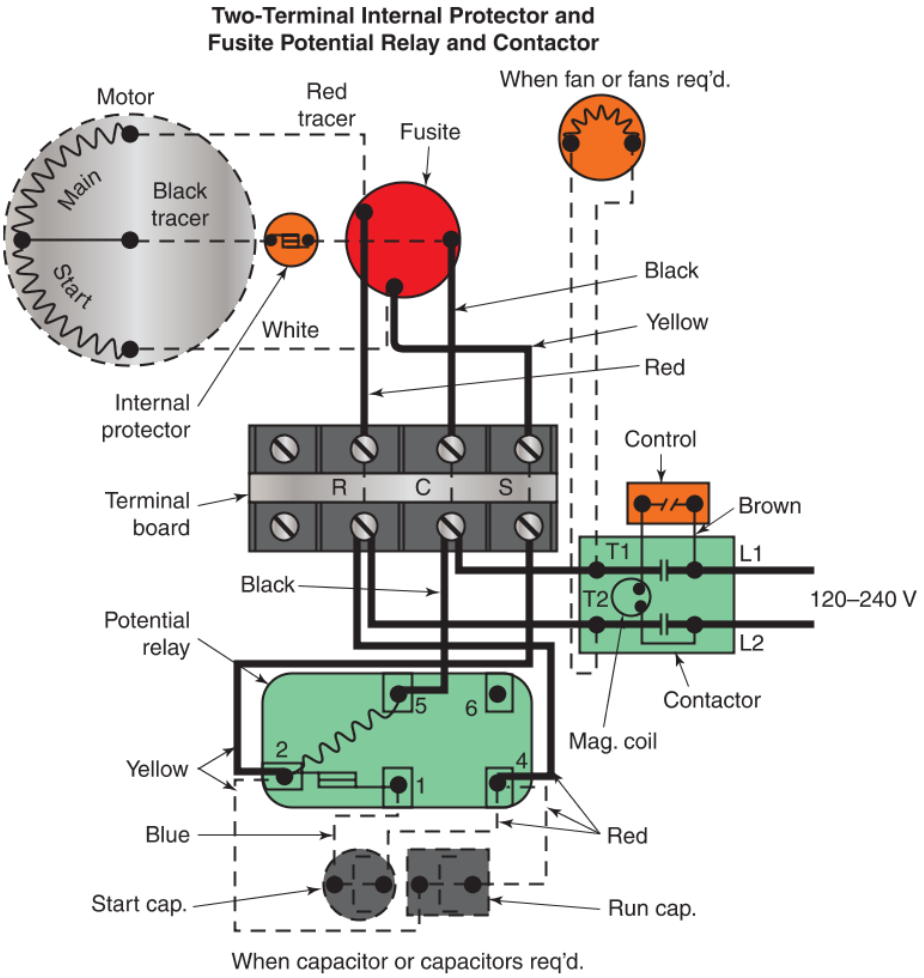

Goodheart-Willcox Publisher

Figure 16-37. Wiring diagram showing a contactor (highlighted in green) wired to control a 120–240 V single-phase compressor. Additional wiring is shown for fans and capacitors.

Copyright Goodheart-Willcox Co., Inc.

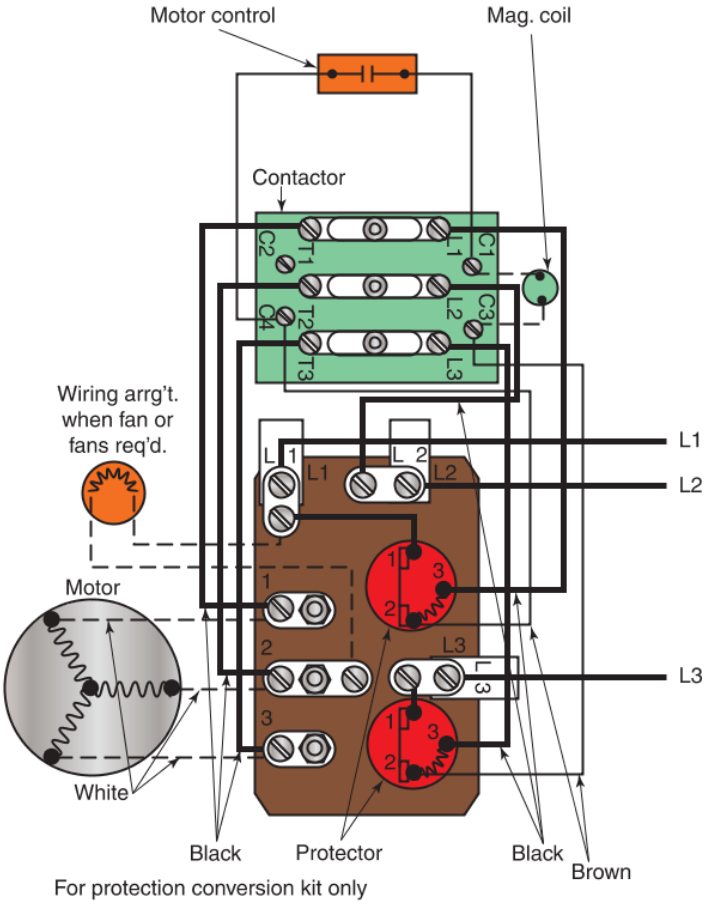

Goodheart-Willcox Publisher

Figure 16-38. Wiring diagram for a three-phase compressor showing both the wiring diagram and pictorial representation of the contactor. The motor control is wired in series with the magnetic coil of contactor.

Field wiring must be performed by a qualified technician. Improperly installed and grounded field wiring may present fire and electrocution hazards. Always follow field wiring installation and grounding as described in NEC and local/state electrical codes. Failure to follow codes may result in serious injury or death.

Solid-State Relays

A ***solid-state relay (SSR)*** is a relay that uses electronic components (such as transistors, silicon-controlled rectifiers, or triacs) rather than mechanical components to switch circuits on and off. They are solid-state because there is no physical movement of mechanical parts. Switching is done electronically (solid-state). For this reason, solid-state relays are sometimes referred to as *electronic relays*, **Figure 16-40.**

SSRs are typically used to start single-phase motors. Changes in voltage in the motor, as it starts and then gathers speed, are used to open the start winding circuit at the correct time. These relays are not as sensitive to the size of the motor as other relays. The same solid-state relay can be used for motors varying from 1/12 hp to 1/3 hp.

Positive Temperature Coefficient Relays

A ***positive temperature coefficient (PTC) relay*** is an electronic relay that uses a PTC thermistor to control the motor circuit by increasing its resistance as it senses high ambient temperature, **Figure 16-41**. PTC relays are typically used on fractional horsepower motors.

Refer to the wiring diagram in **Figure 16-42** for the description of a PTC relay operation with a permanent split capacitor (PSC) motor. Notice that the PTC relay and run capacitor are wired in parallel with each other. This offers the current through the start winding two possible paths to complete the circuit. Remember that current always takes the path of least resistance. When the circuit is first energized, the PTC relay has

Copyright Goodheart-Willcox Co., Inc.

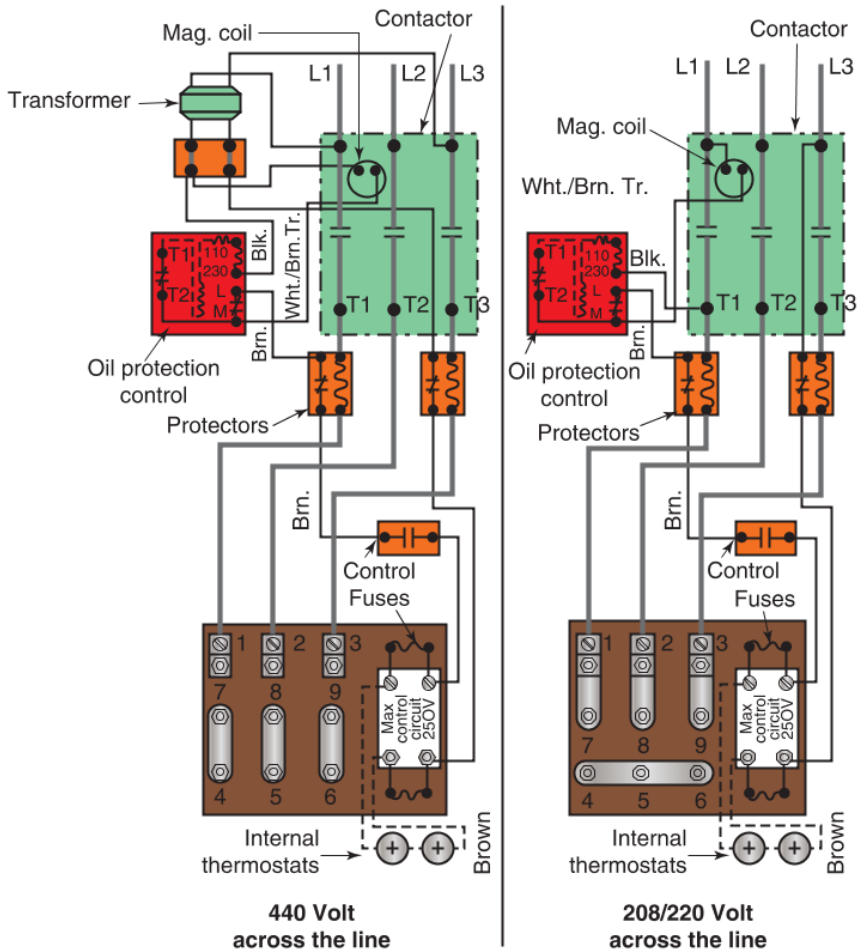

Emerson Climate Technologies

Figure 16-39. Wiring diagrams shows 440 V and 208-220 V circuits designed for three-phase power. Lines L1 through L3 each carry one leg of the three-phase voltage.

©2012 Caleffi North America, Inc.

Figure 16-40. A solid-state relay.

Danfoss

Figure 16-41. Two positive temperature coefficient (PTC) relays.

Copyright Goodheart-Willcox Co., Inc.

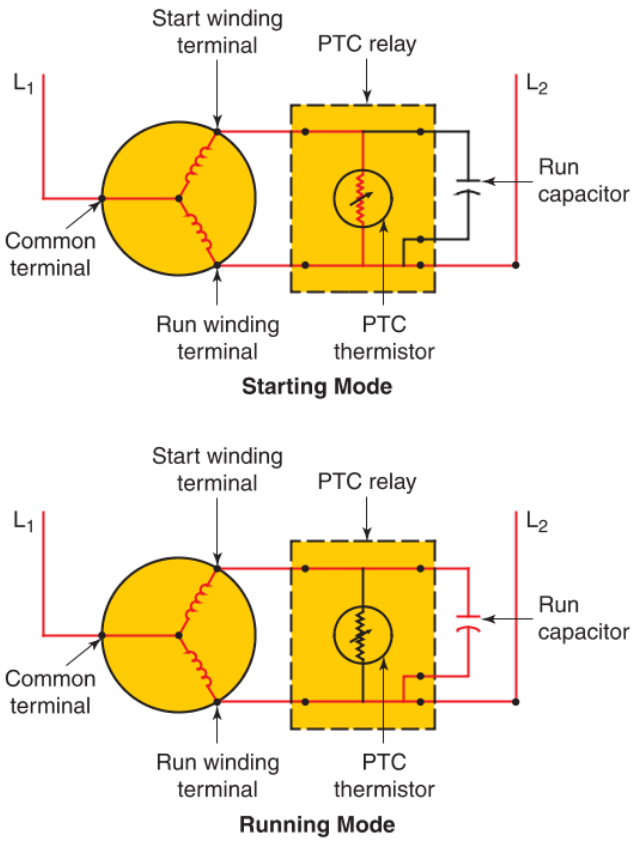

Goodheart-Willcox Publisher

Figure 16-42. A PTC relay used to start a PSC motor. Starting Mode—During start-up, the low resistance of the PTC relay provides an easier path to follow than the run capacitor. Running Mode—After heating up, the PTC relay develops high resistance and effectively stops conducting. Current now follows a parallel path of lesser resistance through the run capacitor.

a low resistance that is between 3 Ω and 12 Ω. These values mean that it is easier for current to pass through the PTC relay than through the run capacitor. During start-up, the run winding and the start winding are both energized. Because current passes through the PTC relay and *not* the run capacitor, the run capacitor serves no function during start-up.

As the motor gains speed, current continues to flow through the thermistor inside the PTC relay, causing it to heat up. PTC relays have a large temperature range for their low-resistance setting. When a PTC relay heats up to its set point temperature, the thermistor's low resistance changes to a very high resistance. This high resistance, between 10 kΩ to 20 kΩ, effectively opens its leg of the circuit and prevents the flow of current across the thermistor. The start winding current seeks the path of least resistance, which is now through the run capacitor.

After outside controls cut power to the circuit, the motor stops running. While the motor is not energized, the PTC relay cools down. A cool-down period is necessary for the PTC relay's resistance to drop low enough for the motor to start up again. Usually two to five minutes is a sufficient cool-down period. Trying to start the motor before the PTC relay has had enough time to cool down can trip the motor overload protection.

Pro Tip

PTC Relay Contacts

A PTC relay does not have actual contacts. Rather, it has a thermistor that acts as a contact. When the thermistor has low resistance, it acts as a closed contact. When it has high resistance, it acts as an open contact.

16.4 Motor Protection Devices

The most common causes of motor failure are current overloads and overheating. An overload may result in melted conductors or burned insulation on the motor windings. Considerable damage may also result if the motor overheats. Overheating can occur without the current draw becoming excessive.

It is important to protect a motor from both current overloads and overheating. Therefore, it is necessary to use both current-sensitive and heat-sensitive devices. Fuses, circuit breakers, bimetal switches, and thermistors are some of the devices used for motor protection. These devices open the motor circuit before there is damage to the motor.

16.4.1 Fuses

A ***fuse***, short for fusible link, is a short piece of metal wire that is specifically designed to conduct a certain amount of current before it melts to open the circuit, stopping the current flow. Fuses are used to protect motors from burning out due to current overloads. Fuses are usually located outside the motor for easy access. Fuses conduct current normally when operating below their maximum rating. **Figure 16-43** shows the fuse ratings in amperes for various ac motors.

When current through a circuit exceeds the fuse's maximum rating, heat builds up inside the fuse. This causes the conductive element inside the fuse to melt, opening the circuit and preventing current flow to the motor. A fuse with a melted element is called a ***blown fuse***. A circuit with fuse protection is shown in **Figure 16-44**.

There are four important types of fuses used in HVACR:

- Fast-acting.
- Time-delay.

Copyright Goodheart-Willcox Co., Inc.

Maximum Fuse Ratings for AC Motors		
Motor Horsepower	Motor Voltage	
	120 V	240 V
1/6	4.4 A	2.2 A
1/4	5.8 A	2.9 A
1/3	7.2 A	3.6 A
1/2	9.8 A	4.9 A
3/4	13.8 A	6.9 A
1	16.0 A	8.0 A
1 1/2	20.0 A	10.0 A

Goodheart-Willcox Publisher

Figure 16-43. This table lists the maximum fuse current ratings for ac motor protection according to motor horsepower.

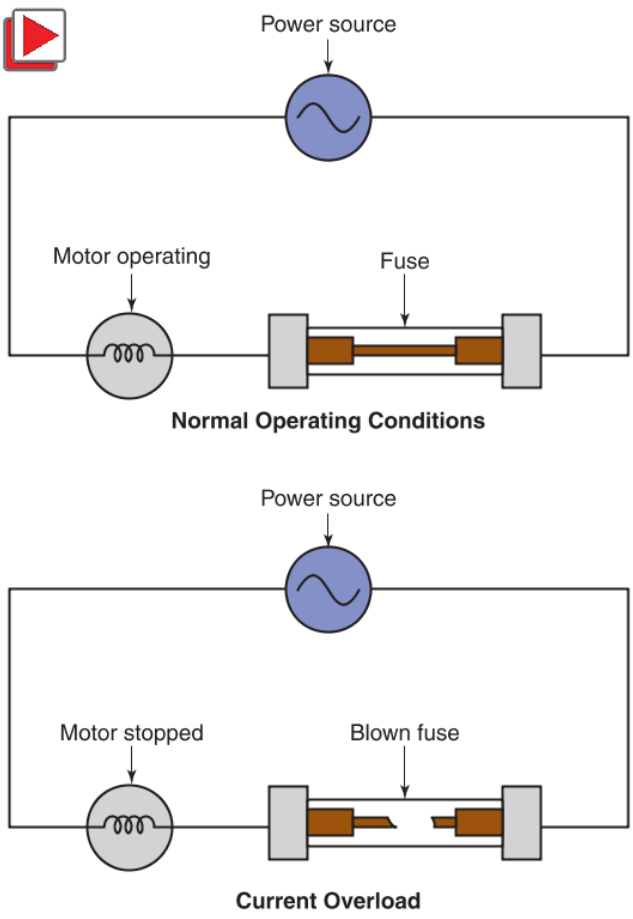

Goodheart-Willcox Publisher

Figure 16-44. When a motor circuit is protected by a fuse, the motor operates as long as the current does not exceed the fuse's maximum rating long enough to blow the fuse.

- Multipurpose.
- Current-limiting.

The starting current of a motor can be from two to six times the running current of that motor. A ***fast-acting fuse*** blows immediately after the maximum rating of the fuse is exceeded. A fast-acting fuse used on a motor with a high starting current will blow before the motor can start running. Thus, fast-acting fuses are used in applications where the motor does not have high starting torque. For example, blower motors may use a fast-acting fuse, as they do not have significant torque at start-up. Compressors, on the other hand, often have higher torque requirements to overcome pressure differences at start-up, which means they would not use a fast-acting fuse.

A ***time-delay fuse***, also known as a dual-element fuse, will not blow unless an overload condition exists for a certain period of time, typically ten seconds. The time delay is usually required when a motor has a high starting current. Compared to a fast-acting fuse, the disadvantage of a time-delay fuse is if an extremely high current overload occurs, then the motor could be damaged from the high current before the time delay is over. Because a fast-acting fuse does not have a time delay, it will shut the motor off before damage occurs. A time-delay fuse allows the operation of a motor with high starting current to reach full speed when it lowers its current draw to an acceptable level.

A ***multipurpose fuse*** has the advantages of both the fast-acting and time-delay fuses. A multipurpose fuse will not blow during small overloads lasting only short periods of time, such as when the motor is starting. However, if an extremely high overload occurs (over 500% of the maximum current rating), the fuse will blow immediately. A multipurpose fuse provides good motor protection from both long-term, small overloads and short-term, large overloads.

A ***current-limiting fuse*** will open a circuit when the current exceeds its limit and the fuse heats up. Current-limiting fuses use temperature-sensitive resistors that open up and then close when cooled back down. They prevent the electrical current to the motor from exceeding the rated locked rotor amperage, **Figure 16-45.**

Pro Tip

Blown Fuses

If a particular fuse and its equally rated replacements continue to blow, check to make sure the fuse is the proper size rating for the application. If the fuse is the correct size, there could be another cause such as a short somewhere else in the circuit.

Copyright Goodheart-Willcox Co., Inc.

DiversiTech Corporation

Figure 16-45. Various types of fuses.

16.4.2 Circuit Breakers

Many homes and businesses use circuit breakers for each building circuit rather than fuses. A ***circuit breaker*** is an automatic switch that opens a circuit if the current draw exceeds a predetermined level. These can be single-pole or multiple-pole. One example of using a double-pole circuit breaker is when connecting two hot 120 V lines to power a 240 V compressor motor, **Figure 16-46**.

Circuit breakers are usually rated the same as fuses. A ***tripped circuit breaker*** is one that has opened due to high current. It must be manually reset. As with fuses, if a circuit breaker is continually tripping open, the breaker should be carefully examined. If the breaker has sufficient capacity, there may be a short or other trouble in the circuit.

Fuses and circuit breakers are not necessarily interchangeable. The UL (Underwriters Laboratories) nameplate on an HVACR device may indicate the type of overload protection device required by the National Electrical Code®.

16.4.3 Bimetal Protection Devices

Bimetal devices are commonly used as safety devices to protect a motor from both current overloads and overheating. They can be used for either internal or external motor protection. If a motor draws too much current or if nearby parts overheat, a bimetal device will bend from the heat and open the circuit to shut down the motor.

Bimetal discs are often used as a form of internal motor overload protection. The contact points are normally closed. If the motor draws too much current that generates an excessive temperature, the disc bends and opens the contact points, which breaks the circuit. When the temperature of the disc drops enough, the disc returns to its normal shape and the contact points close. An internal bimetal protection device may also break the motor circuit if excessive heat builds up in the motor, even if the current draw remains at acceptable levels, **Figure 16-47**.

Single-Pole Circuit Breaker

Double-Pole Circuit Breaker

DiversiTech Corporation

Figure 16-46. A single-pole and a double-pole circuit breaker.

Copyright Goodheart-Willcox Co., Inc.

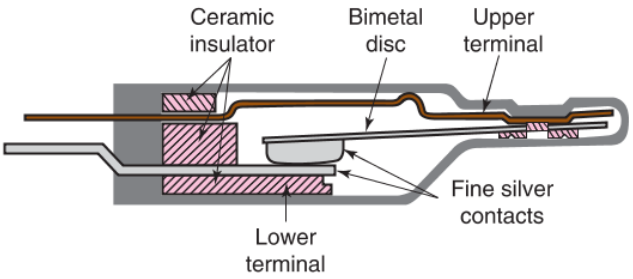

Goodheart-Willcox Publisher

Figure 16-47. This bimetal disc protection device is compact and designed to fit into a motor with its windings.

Pro Tip

Motor Overheating Conditions

A motor may overheat if there is too little refrigerant flow because refrigerant vapor is often used to cool a compressor's motor. A motor may also overheat if it has to start again shortly after shutting off.

Internal motor overload protection is mainly used on hermetic compressors. Motors having this protection are usually labeled *Internal Overload Protected*. The internal bimetal protection device is located inside the compressor, directly on or in the motor windings. In three-phase motors with a wye configuration, the internal protection is at the common point of the three windings. It will open all three circuits when its contacts open, **Figure 16-48**.

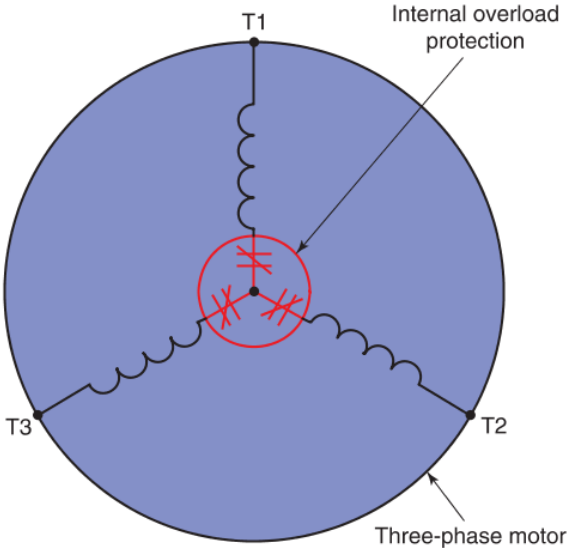

Copeland Corporation

Figure 16-48. A three-phase motor usually has internal overload protection at the common point of the three windings. Since heat will build up equally at this point, all three contacts should open simultaneously so that all three sets of windings are opened together.

In most HVACR equipment, a hermetic compressor is designed to start under a condition of balanced pressures. Overheating is a danger if the motor must start against a high head pressure. With the increased starting load, the motor may draw excessive current, causing the internal motor overload protection to open the motor circuit. Most motors normally operate at 125°F (52°C). When the temperature reaches 200°F to 250°F (93°C to 121°C), the bimetal internal protection device will open the circuit and stop the motor.

If there is excessive current draw, excessive temperature, or both, an internal bimetal protection device will open the motor circuit. Loss of refrigerant, a restriction in the system, or low suction pressure could lead to a burnt-out motor if the bimetal protection device were not installed. When the unit has cooled down, the bimetal device will close, and the unit can cycle on again.

Pro Tip

Overload Protection Reset

After the internal motor overload protection opens the circuit, it may be an hour to two hours before it will close. This depends on the ambient temperature conditions. Use forced air, dry ice, or carbon dioxide spray to speed up compressor dome cooling. Do not tap on the controls in an attempt to operate the contact points. The contact points may vibrate and arc, causing them to burn out quickly.

Caution

Shorted Overload Protection

The leads to internal motor overload protection must never be shorted. Even a few moments of operating a compressor without this protection may burn out the motor. This protection cannot be taken out of the motor circuit.

Bimetal discs are also frequently used as external motor overload protection as well. **Figure 16-49** shows one variation of the bimetal disc. In this version, current passes through the heater coil and contacts before going to the motor. The device opens the circuit if the bimetal disc reaches a temperature that causes it to snap in the other direction.

Pro Tip

External Bimetal Protection Devices

External bimetal devices used for motor protection may only open a circuit if the current is too high. If the motor should overheat from other troubles, it may still run and be damaged. Possible sources of excessive heat are high exhaust temperatures, poor air circulation, poor refrigerant circulation, and friction.

Copyright Goodheart-Willcox Co., Inc.

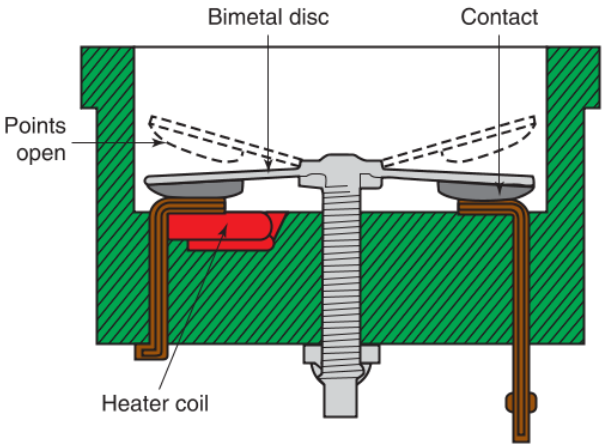

Texas Instruments, Inc.

Figure 16-49. Excess heat through the heater coil will cause the bimetal disc to snap open the contact points.

Alerton

Figure 16-50. This DDC controller is capable of producing digital and analog outputs.

16.4.4 Thermistor-Based Protection Devices

Another type of internal motor protection device is the PTC thermistor. The PTC thermistor is often connected in series with the windings of a motor. It prevents current from conducting when the temperature of the motor increases beyond a safe level. After the motor and thermistor cool down to a safe temperature, current will be able to flow and run the motor.

Another type of electronic thermistor has a negative temperature coefficient (NTC). The thermistor is placed in a capsule within the motor. As the temperature increases, the resistance of the NTC thermistor decreases. If the temperature rises to about 200°F (93°C), the decreased resistance allows increased current flow through the thermistor, which operates a relay circuit that opens the motor circuit. This shuts the motor off. When the temperature falls back to a safe value, the resistance increases, which decreases the current below the amount required to hold the relay open. The relay will then close so the motor can run again.

16.5 Direct Digital Control (DDC)

Direct digital control (DDC) is a type of control system that utilizes multiple digital and analog inputs and outputs in the form of low-voltage and/or low-current signals connected to a microprocessor that operates an HVAC or automated building system. The microprocessor functions as a master controller. It receives information from different inputs, processes this information (using an algorithm or program), and produces output commands to devices, **Figure 16-50**.

The human body can be viewed as analogous to a DDC system. When a person touches a hot flame, there is a reaction to pull back. The brain acts as a controller, receiving an input from the temperature sensor (fingers touching a hot flame). The brain processes this input and determines that the finger should pull away from the flame. The brain sends an output signal to the muscles to contract or pull away from the flame. This all happens very quickly. A DDC controller also receives, processes, and sends signals to react quickly.

There are numerous advantages to DDC over older mechanical or pneumatic systems. The microprocessor control provides faster response times, has very few moving parts, and usually includes internal diagnostic capability for troubleshooting, **Figure 16-51**.

DDC wiring between the controller and sensors is lightweight, low-voltage wiring that only needs to be able to carry very small electrical signals, typically 0–10 Vdc or 4–20 mA. Some DDC components can even function wirelessly, saving both the cost of wiring and the time and labor necessary to install wiring. Typical installation of components involves simply connecting wiring to input and output terminals on the controller. This is usually done with either a twisted pair or dual wire group. Inputs and outputs are wired along a terminal strip, **Figure 16-52**.

Inputs and outputs are either analog or digital signals to and from the controller. Analog data is an electrical signal that can vary continuously over a range. Think of the shape of an alternating current sine wave. At any point along the sine wave, a measurement can be any value between the high and low points. Digital

Copyright Goodheart-Willcox Co., Inc.

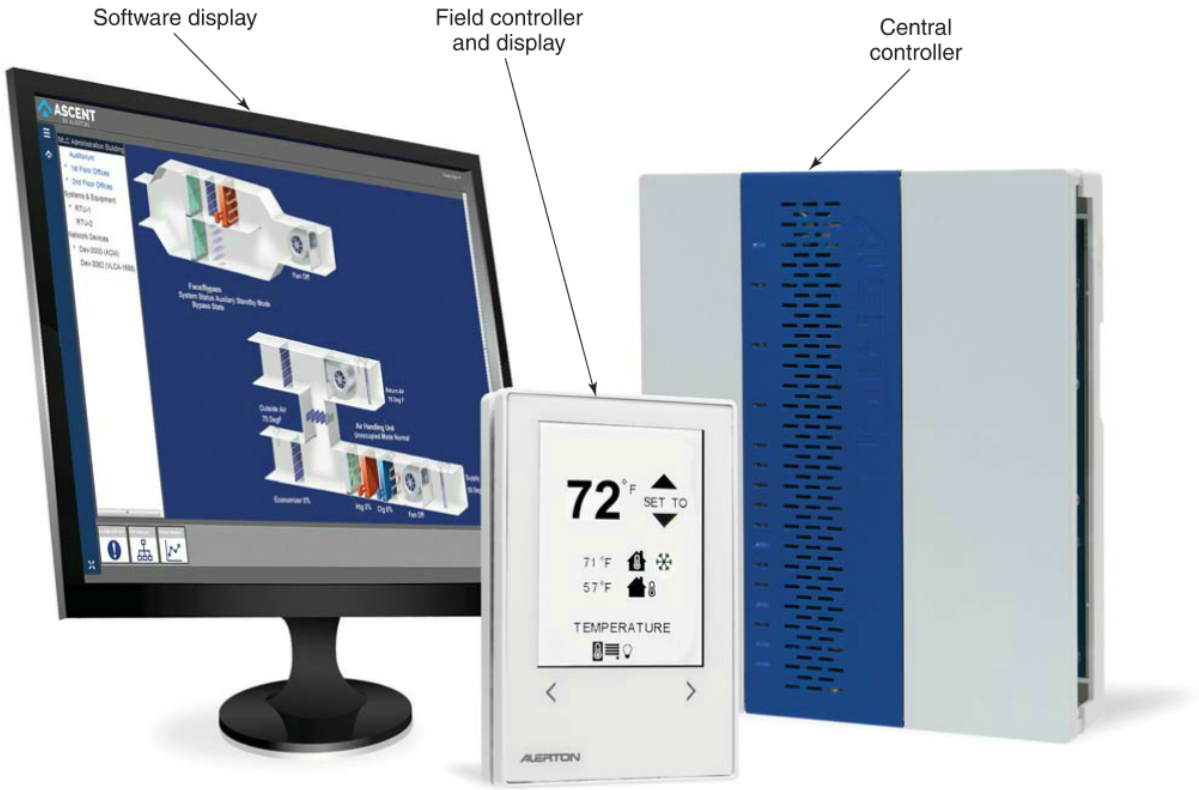

Alerton

Figure 16-51. Many DDC systems have software that can be used to control and monitor system operation.

Alerton

Figure 16-52. This DDC field controller uses multiple inputs and outputs along its terminal strips to control one of a building's ventilator units.

data is an electrical signal that is produced in discrete steps. A digital signal only occupies certain steps or values along a scale. If an analog sine wave was digitized, it would look like a series of miniature stair steps rising and falling. This exemplifies how digital signals are produced as discrete steps, **Figure 16-53**.

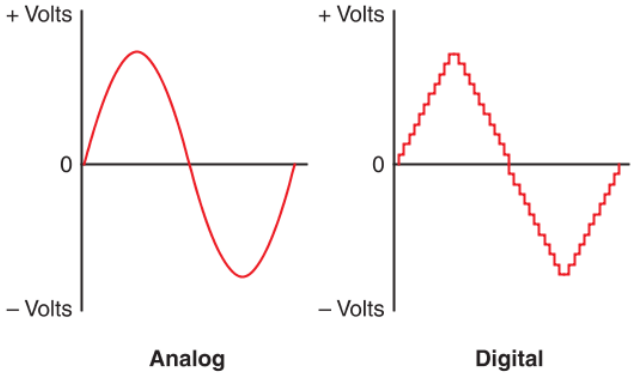

Goodheart-Willcox Publisher

Figure 16-53. An illustration of analog and digital signals.

Copyright Goodheart-Willcox Co., Inc.

Many modern DDC controllers accept analog and digital inputs but produce digital outputs. These outputs can be used to control a variety of devices, such as an actuator controlling an airway damper position. Based on the magnitude of the output signal, the actuator could hold open the damper at several different positions. The range of open is measured as a percentage. Each percentage open is assigned a specific voltage or current. If the output was in the 0 Vdc to 10 Vdc range, a fully open damper may correspond to 0 Vdc, 25% closed = 2.5 Vdc, 50% closed = 5 Vdc, 75% closed = 7.5 Vdc, and fully closed = 10 Vdc. Each component in a DDC system is designed with a specific output voltage or current draw for its particular operation, **Figure 16-54**.

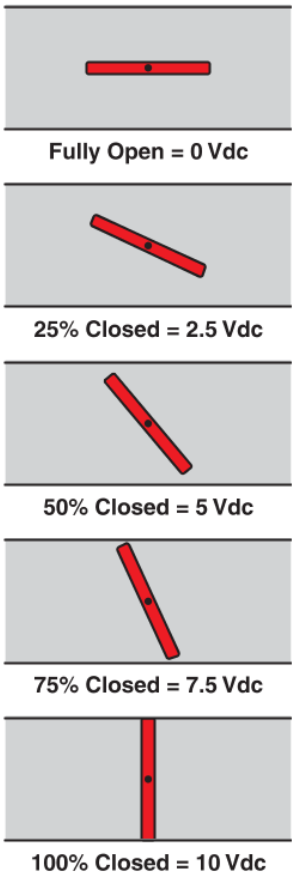

Goodheart-Willcox Publisher

Figure 16-54. DDC systems can control damper positioning by applying a specific current or voltage.

16.5.1 Control Loops

There are two basic categories of control systems: open loop and closed loop. An ***open-loop control system*** is a system in which the controller sends commands to the controlled device with no detected feedback information from the conditioned space being returned to the controller. There is no temperature sensor or other detection device that is telling the controller about the conditions being controlled. In such cases, a human operator acts as the conditioned space's sensor. If the operator wants to change the conditioned space, he or she must manually change the thermostat to activate an output device to affect the conditioned space, but the system has no feedback mechanism to automatically control the conditioned environment.

Most HVACR control systems are closed-loop systems. In a ***closed-loop control system***, a sensor produces a signal based on the conditions in the conditioned space and transmits it to the controller. The controller compares the signal to the set point (desired condition). The controller then sends a signal to a controlled device to modify or maintain operating variables, depending on the sensor's input. The controlled device's action changes the conditions in the conditioned space. This change in the conditioned space is then detected by the sensor, which sends a modified signal to the controller. In this way, the system's output modifies the system input, which in turn helps determine the next output. The process repeats continuously as the system attempts to maintain a given condition, **Figure 16-55**.

Feedback is information detected by a sensor in a conditioned space that is sent to a controller to determine what action needs to be taken. An example of feedback is the temperature signal sent to a thermostat. The signal might indicate that the conditioned space is at the desired temperature or that it is too hot or too cold.

The following terms are used when referring to closed-loop control systems:

- ***Set point***—the desired condition.
- ***Control point***—the present condition as measured by the sensor.
- ***Offset***—the difference between the set point and the control point. Offset is sometimes called *error*.

16.5.2 DDC System Components

HVACR control system components each have their own designated purpose and function. The three basic types of components in a control system are sensors, controllers, and controlled devices (actuators). The following sections explain how these important components function in a control system.

Sensors

A sensor detects a specific variable in a conditioned space and sends a signal to the controller based on the measured value of that variable. Each type of

Copyright Goodheart-Willcox Co., Inc.

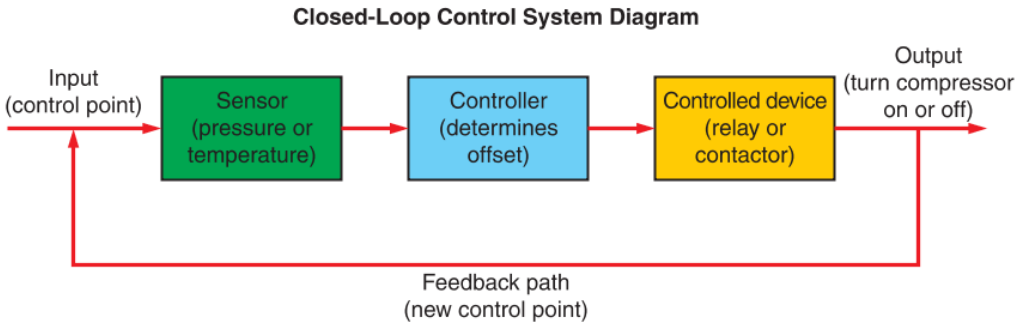

Goodheart-Willcox Publisher

Figure 16-55. This diagram of a closed-loop control system shows how the system continuously repeats the process of determining a conditioned space's control point, comparing it to its set point, and initiating an action if there is an offset.

sensor detects and responds to one specific type of stimulus, such as temperature, pressure, an electrical signal, or some other variable. The sensor then sends a signal to the controller that reflects the condition the sensor has been exposed to, **Figure 16-56**.

Electronic sensors are stable and easily programmed for various conditions. However, the information that a sensor may be detecting is not always in an electrical format. Transducers can convert an input signal of one form of energy into an output signal of another form of energy. This allows sensors that do not produce an electrical output to use a transducer to change their signal into an electrical signal for communicating with the controller.

For instance, as the temperature is rising in a refrigeration system's evaporator, a thermostat's sensing element detects the corresponding rise in pressure. However, an electronic controller cannot respond to a pressure signal, so the sensing element's pressure is transferred to a diaphragm or bellows. These devices change the pressure signal into a mechanical signal in the form of physical movement. This movement trips a switch that sends an electrical signal to the controller.

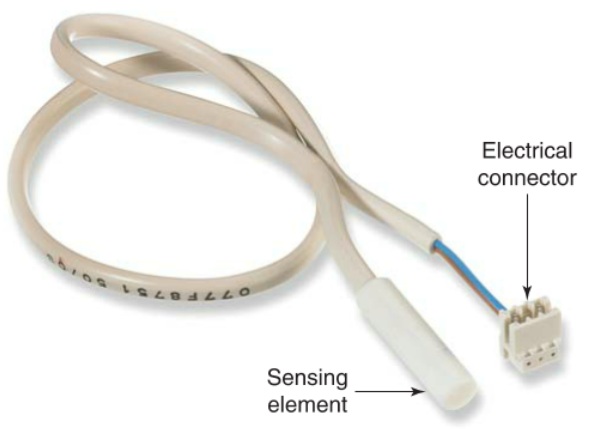

Danfoss

Figure 16-56. This temperature sensor may be used in air conditioning, refrigeration, or heating systems.

Pro Tip

Sensor or Transducer

It is possible for some sensors to be transducers and for some transducers to be sensors. Often the terms are used interchangeably. A device's main function determines whether it is a sensor or a transducer. If it is used mainly to detect a particular condition (heat, pressure, current, etc.), it is considered a sensor. If it is used mainly to change one form of energy into another form, it is considered a transducer.

Widely used sensors include the following:

- Sensing bulb or elements—react to heat by changing pressure, usually used with a diaphragm or bellows.
- Bimetal devices—react to heat by changing shape, often to actuate a switch.
- Thermistors—react to heat by changing resistance, often to modify an electrical signal being measured by an instrument.
- Thermocouples—react to heat by producing a DC voltage that generates a current in a complete circuit.

Controllers

A ***controller*** is a circuit that responds to changes in the signals from sensors and issues signals to controlled devices. Examples of individual controller components include thermostats, pressurestats, and humidistats. A controller accurately and automatically operates output devices called controlled devices. The signals sent to the controlled devices from the controller can be electrical, pneumatic, or hydraulic. Those signals can be used to turn a system on and off or change its operating parameters. The devices operated by the controlled devices are interlocked with safety devices so they will not exceed their design limitations, even if the signals from the controller direct them to. A DDC

Copyright Goodheart-Willcox Co., Inc.

system may have a master controller that is centrally located and remotely located field controller for certain parts of the system, **Figure 16-57**.

Controlled Devices

Simply put, a ***controlled device*** is a device that operates based on signals from a controller. A sensor provides an input to a controller. The controller processes this data and produces an output that is sent to a controlled device. A controlled device can be a motor, a solenoid, a contactor, a relay, or some other type of actuator. An ***actuator*** is a controlled device that changes an input energy (fluid, thermal, electrical, etc.) into mechanical motion. With this in mind, solenoids, motors with gear assemblies, control valves, and other devices can act as actuators.

Control devices perform different functions, such as opening or closing valves, turning large motors on or off, or positioning dampers. In short, control devices are the means by which a control system starts, stops, or adjusts the operation of an HVACR system or a building control system.

Relays are electrical devices commonly used to start or stop different system components, such as motors. The coil in a relay creates a magnetic field that closes or opens contacts in a circuit or circuits, **Figure 16-58**.

Relays are often categorized by the control voltage to the coil. This value is commonly 24 V, 120 V, or 240 V. However, different voltages are available based on the application. In DDC systems, check the electrical output of the controller and find a relay with a matching voltage level.

Relays are commonly used to electrically isolate lower control voltage from higher power voltage that is used to run higher current loads. The lower voltage is applied to the relay coil, and the higher voltage current runs through the contacts to the electrical loads. This isolates the high-voltage current required in the power circuit for system operation from the system control circuit. As a result, the power circuit can be made as short and as direct as possible.

A type of relay commonly used in control systems is the lockout relay, **Figure 16-59**. A ***lockout relay*** is a

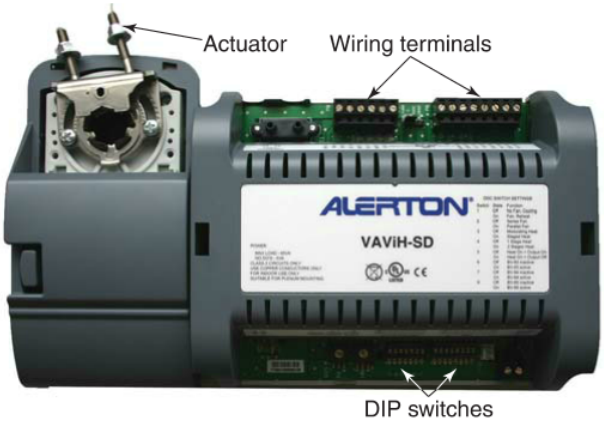

Alerton

Figure 16-57. A field controller with a built-in actuator for variable air volume control.

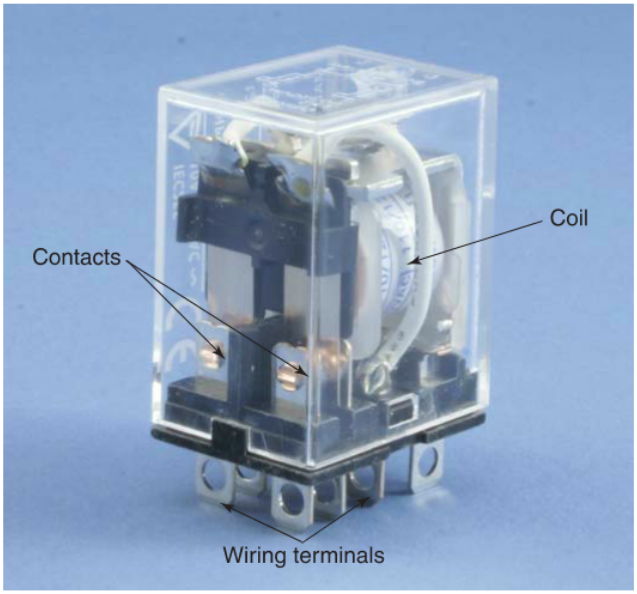

Goodheart-Willcox Publisher

Figure 16-58. A relay has a coil that creates a magnetic field when it is energized, which opens or closes the relay's contacts.

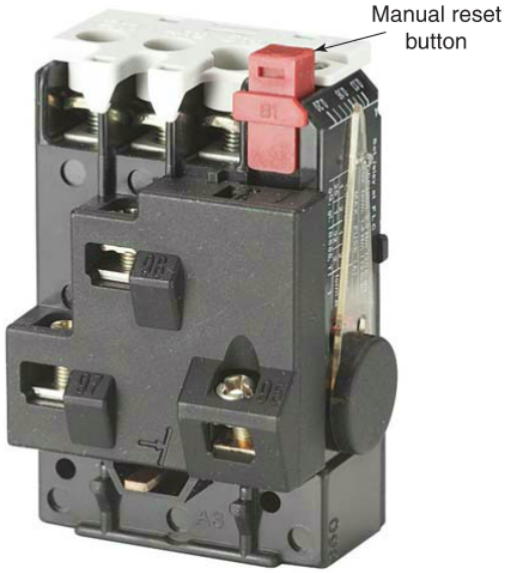

Danfoss

Figure 16-59. Many lockout relays have a manual reset button that is used to open the lockout relay coil circuit and reset the normally closed lockout relay contacts.

Copyright Goodheart-Willcox Co., Inc.

special high-impedance relay that keeps a circuit from restarting when any of the safety controls in the circuit have opened. ***Impedance*** is the opposition to the flow of alternating current in an ac circuit. Once a lockout relay is tripped, voltage to its coil must be interrupted to reset the lockout relay contacts, **Figure 16-60**.

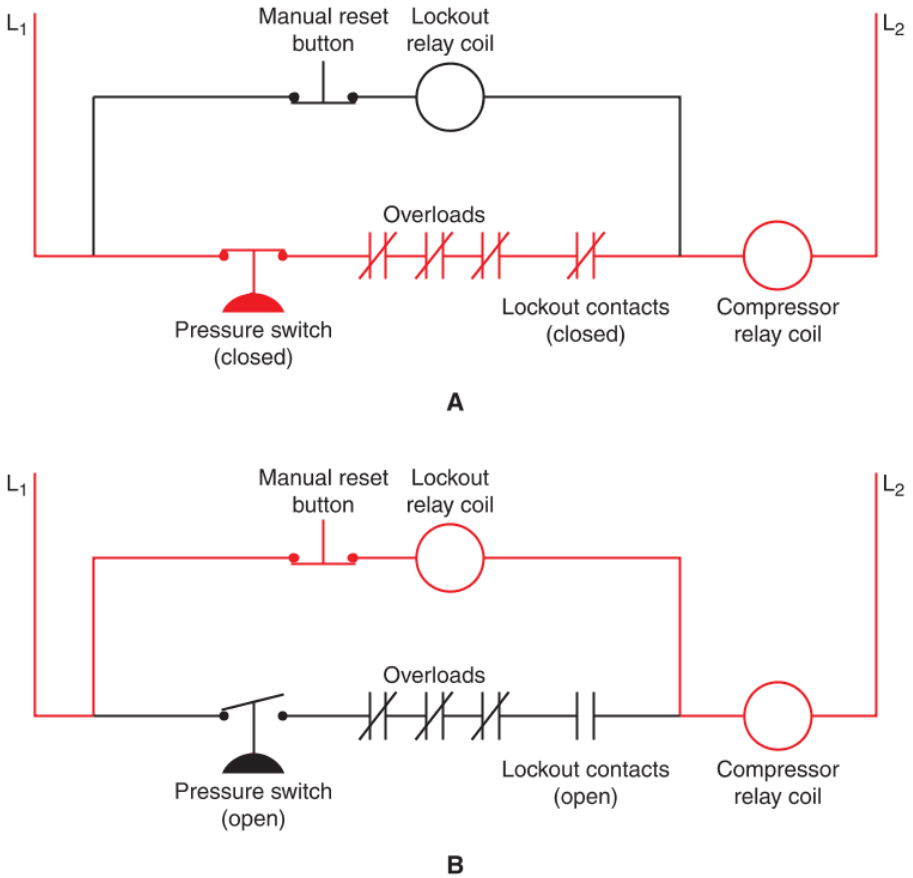

Goodheart-Willcox Publisher

Figure 16-60. Diagram of a lockout relay circuit. A—With the pressure switch closed, all of the circuit's current flows through the lockout contacts and energizes the compressor relay coil. B—With the pressure switch open, all of the current flows through the lockout relay coil, opening the normally closed lockout relay contacts. Because the lockout relay coil has high impedance, not enough current reaches the compressor relay coil to energize it.

Copyright Goodheart-Willcox Co., Inc.

Chapter Review

Summary

- Pictorial diagrams show electrical connections and the approximate physical location of devices in relation to each other. Ladder diagrams show a circuit's devices and connections arranged in the order that they activate during circuit operation. Ladder diagrams are useful for troubleshooting.
- HVACR control systems regulate variables, such as temperature, pressure, and humidity, inside a conditioned space. The three major components in a control system are sensors, controllers, and controlled devices.
- A control system achieves the desired conditions in an area by turning components on and off or by adjusting component operation. Two values used with controlled devices are cut-in and cut-out. Cut-in is the condition value at which a device begins operation. Cut-out is the condition value at which a device ceases operation.
- There are two main types of adjustments that can be made to controls: range adjustment and differential adjustment. Range adjustment moves the minimum and maximum values the same amount in the same direction. Differential adjustment regulates the difference between the cut-in and the cut-out settings by changing both of these values the same amount in different directions or by changing only one of these values.
- The principal types of temperature-sensing devices used to control motor operation include the sensing bulb, the bimetal device, and electronic sensors. Sensing bulbs and bimetal devices react to changes in temperature by causing mechanical motion, which opens or closes contact points in a circuit. Electronic temperature sensors produce electrical feedback to a controller either by changing resistance based on temperature (thermistor) or by generating a voltage level that is based on temperature (thermocouple).
- Pressure motor controls regulate a compressor motor based on a system's low-side pressure, high-side pressure, or oil pressure. Pressure controls regulate the motor to help maintain the proper pressure in the evaporator, and they also prevent the motor from operating under excessively low suction pressure, excessively high head pressure, or improper oil pressure.
- In HVACR, relays are often used to start single-phase motors. An electromagnetic relay relies on changing current or voltage values in a motor's windings to connect and disconnect the start windings, start capacitor, or both from a motor circuit. Solid-state relays use electronic devices to control current through a motor's windings.
- Fuses and circuit breakers protect motors by opening the motor circuit when the current exceeds a predetermined level. Bimetal devices protect a motor if it heats up beyond safe limits by opening a set of contacts and causing the motor to shut down. Thermistors also protect motors from overheating or high current by increasing their resistance, which limits current flow and stops the motor.
- Direct digital controls (DDC) is a type of control system that utilizes multiple digital and analog inputs and outputs in the form of low-voltage and/or low-current signals connected to a microprocessor that operates an HVACR or automated building system. DDCs utilize sensors, controllers, and controlled devices.
- There are two basic types of control systems: open loop and closed loop. An open-loop control system relies on an operator to manually trigger changes in operation. A closed-loop control system uses feedback from sensors in the conditioned space to modify system output.

Review Questions

Answer the following questions using the information in this chapter.

1. The type of circuit diagram that shows the approximate physical location of components in relation to each other is a _____ diagram.
   A. Boolean
   B. ladder
   C. pictorial
   D. Venn
2. The type of circuit diagram that shows the components and connections arranged in the order that they activate during circuit operation is a _____ diagram.
   A. Boolean
   B. ladder
   C. pictorial
   D. Venn

Copyright Goodheart-Willcox Co., Inc.

3. Which of the following is *not* one of the three main components used in an HVACR control system?
   A. Controlled device
   B. Controller
   C. Operator
   D. Sensor
4. Which device responds to changes in the signals from sensors and issues signals to controlled devices?
   A. Relay
   B. Contactor
   C. Thermocouple
   D. Controller
5. In control systems, the desired condition is called the _____.
   A. control point
   B. cut-in
   C. offset
   D. set point
6. The term for the present condition in a conditioned space is the _____.
   A. control point
   B. cut-in
   C. offset
   D. set point
7. Sometimes called error, the deviation between set point and control point is the _____.
   A. differential
   B. cut-in
   C. offset
   D. range
8. The temperature or pressure value at which a device begins operation is its _____.
   A. cut-in
   B. cut-out
   C. differential
   D. range
9. The temperature or pressure value at which a device ceases operation is its _____.
   A. cut-in
   B. cut-out
   C. differential
   D. range
10. The set of numbers between and including a control system's cut-in and cut-out values is called the system's _____.
   A. offset
   B. set point
   C. differential
   D. range
11. A control system's _____ is the difference between the cut-out value and cut-in value.
   A. adjustment
   B. average
   C. differential
   D. range
12. Which of the following statements about range adjustment is true?
   A. It increases a system's differential.
   B. It decreases a system's differential.
   C. It affects a system's average temperature.
   D. It has no effect on how a system operates.
13. Reducing a system's cut-out temperature without changing its cut-in temperature is an example of _____.
   A. differential adjustment
   B. range adjustment
   C. combination control
   D. actuator modulation
14. If a cooling system's cut-in temperature is decreased, but its cut-out temperature stays the same, which of the following is true?
   A. The average temperature decreases.
   B. The average temperature increases.
   C. The system has a greater differential.
   D. The compressor will run for longer spans of time.
15. Which of the following devices is *not* used as a temperature sensor in thermostatic motor controls?
   A. Bimetal device
   B. Electronic sensor
   C. Fuse
   D. Sensing bulb
16. A(n) _____ element opens an electrical circuit when the temperature rises.
   A. above-atmospheric-pressure
   B. below-atmospheric-pressure
   C. range
   D. pickup
17. Sensing bulbs typically use a bellows or _____ to open and close contact points as their internal pressure changes.
   A. push button
   B. diaphragm
   C. thermistor
   D. solid-state device

Copyright Goodheart-Willcox Co., Inc.

18. Which type of bimetal device expands or contracts and tilts a mercury switch that serves as the electrical contact between wires?
    A. Bimetal disc
    B. Bimetal coil
    C. Bourdon tube
    D. Thermistor
19. Which type of pressure motor control regulates compressor operation to maintain a specific evaporator pressure?
    A. High-pressure motor control
    B. Low-pressure motor control
    C. Low-pressure safety control
    D. Oil pressure motor control
20. If the low-side pressure drops below a safe limit due to refrigerant loss or an evaporator freeze-up, a(n) _____ switches off the compressor motor.
    A. circuit breaker
    B. low-pressure safety control
    C. oil pressure motor control
    D. Wheatstone bridge
21. Which of the following devices does *not* operate on electromagnetic principles?
    A. Contactor
    B. Current relay
    C. Potential relay
    D. PTC relay
22. A _____ relay is operated by the change in current flow through a motor's run winding.
    A. current
    B. lockout
    C. potential
    D. terminal
23. When a single-phase motor reaches three-fourths of its normal operating speed, _____ closes a potential relay's contacts.
    A. centrifugal force
    B. counter emf
    C. current
    D. heat
24. Unlike a contactor, a motor starter is equipped with built-in _____.
    A. contacts
    B. coils
    C. terminals
    D. overload protection
25. Once a PTC relay has heated up and increased its resistance, it causes the start winding current to change paths and flow through the _____.
    A. fuse
    B. relay's coil
    C. run capacitor
    D. thermistor
26. The type of fuse that blows immediately after its maximum rating is exceeded is a _____ fuse.
    A. fast-acting
    B. multipurpose
    C. PTC
    D. time-delay
27. The type of fuse that blows after its maximum rating has been exceeded for a certain period of time is a _____ fuse.
    A. fast-acting
    B. multipurpose
    C. PTC
    D. time-delay
28. Which type of motor protection can be used to sense excessive current draw and excessive temperature?
    A. Bimetal device.
    B. Circuit breaker.
    C. Current-limiting fuse.
    D. Multipurpose relay.
29. Which device decreases its resistance to current flow as the motor's temperature rises, which causes the current to operate a relay that opens the motor circuit?
    A. Bimetal protection device
    B. Circuit breaker
    C. NTC thermistor
    D. PTC thermistor
30. A direct digital control (DDC) system utilizes multiple inputs and outputs in the form of _____ to operates an HVAC or automated building system.
    A. high-pressure pneumatic signals
    B. high-voltage and/or high-current signals
    C. low volume water signals
    D. low-voltage and/or low-current signals
31. A control system that relies on a human operator to act as the conditioned space's sensor is a(n) _____.
    A. closed-loop control system
    B. feedback control system
    C. offset control system
    D. open-loop control system

Copyright Goodheart-Willcox Co., Inc.

32. In a closed-loop control system, sensors monitor a conditioned space and send _____ to a controller, which is information about how the conditions in the area have changed.
    A. actuator data
    B. feedback
    C. heat signals
    D. impedance
33. Which type of relay prevents a circuit from restarting until the power to its coil is interrupted?
    A. Lockout relay
    B. Contactor
    C. Impedance relay
    D. Solenoid relay
34. A controlled device that changes an input energy (fluid, thermal, electrical, etc.) into mechanical motion is a(n) _____.
    A. actuator
    B. sensor
    C. transducer
    D. Wheatstone bridge
35. A device that converts an input signal of one form of energy into an output signal of another form of energy is a(n)_____.
    A. actuator
    B. diaphragm
    C. transducer
    D. Wheatstone bridge

Copyright Goodheart-Willcox Co., Inc.

CHAPTER 17 Servicing Electric Motors and Controls

Chapter Outline

17.1 Electrical Test Equipment
- 17.1.1 Voltmeters
- 17.1.2 Ohmmeters
- 17.1.3 Ammeters
- 17.1.4 Multimeters
- 17.1.5 Power Factor Meters
- 17.1.6 Wattmeters
- 17.1.7 Electrical Insulation Testers

17.2 Troubleshooting Electric Motors
- 17.2.1 Determining Motor Troubles
- 17.2.2 Single Phasing of Three-Phase Motors

17.3 Servicing Hermetic Compressor Motors
- 17.3.1 Electrical Testing of Hermetic Compressor Motors
- 17.3.2 Servicing a Stuck Hermetic Compressor Motor

17.4 Servicing Fan Motors
- 17.4.1 Connection Problems
- 17.4.2 Fan Problems
- 17.4.3 ECM Troubleshooting and Service

17.5 Servicing External Motors
- 17.5.1 Motor Lubrication
- 17.5.2 Motor Bearings
- 17.5.3 Pulleys and Belts

17.6 Servicing Motor Control Systems
- 17.6.1 Troubleshooting and Servicing Controls
- 17.6.2 Troubleshooting and Servicing Relays

Learning Objectives

Information in this chapter will enable you to:

- Use different testing instruments to measure electrical variables in a circuit.
- Test motor winding insulation using a megohmmeter and perform maintenance based on the measured resistance.
- Determine the cause of motor trouble by checking a motor's current draw, start and run capacitors, and internal temperature.
- Measure a three-phase motor's voltage and winding resistance to test it for single phasing.
- Use an ohmmeter to take measurements on a hermetic compressor motor and determine whether it has a shorted winding, an open winding, or a short to ground.
- Start a stuck hermetic compressor motor by connecting a hard start kit to the compressor terminals.
- Service fan motors by identifying connection problems, fan problems, and electronically commutated motor trouble codes.
- Properly lubricate motor bearings and install belts connecting external motors to belt-driven units.
- Troubleshoot and replace faulty control system components, such as thermostats and motor starting relays.

Technical Terms

ammeter
bleed resistor
bushing
clamp-on ammeter
continuity
endplay
hard start kit
in-line ammeter
megohmmeter
multimeter
oilless bushing
outside length
phase loss monitor
power factor meter
pulley
short cycling
single phasing
slip ring lubricating system
voltmeter
wick lubricating system
zerk fitting

Review of Key Concepts

Reviewing these concepts from earlier chapters will help you understand new concepts presented in this chapter:

- The most common causes of motor failure are current overloads and overheating. Both of these conditions may cause damage to motor winding insulation. (Chapter 16)
- Single-phase motors rely on capacitors, centrifugal switches, and relays to start and run efficiently and properly. (Chapter 15)
- The majority of electrical problems can be narrowed down to one of the following causes: a short circuit, a ground fault (short to ground), an overload, an unintentional voltage drop, or an open circuit. (Chapter 13)
- A hermetic compressor consists of a motor sealed inside a compressor dome, while open-drive compressors, fans, and blowers are connected to external motors by means of a direct coupling or belt with wheel and pulley. (Chapter 15)
- A thermostat senses a conditioned space's temperature and sends a signal to the controller to either energize or de-energize the motor starting relay in order to keep the temperature at the desired set point. (Chapter 16)

Introduction

HVACR technicians must know how to test electrical circuits in order to properly troubleshoot and service electric motors and controls. The service of electric motors and controls also requires knowledge of the system design and an understanding of how electrical devices operate within the system. Consistently following good safety practices and being able to read wiring diagrams are the first steps to mastering a skill that requires practice and experience. However, an HVACR technician can still achieve a high degree of success, regardless of skill level, by following an established procedure and performing electrical troubleshooting one step at a time. Safety is the most important aspect of working on electrical equipment. Before any service is performed, power to a motor or control should be shut down and locked out when possible.

Videos

- Using a Multimeter
- Capacitor Tests
- Testing Hermetic Compressor Motors

17.1 Electrical Test Equipment

The most commonly used instruments for testing electrical circuits are the voltmeter, ohmmeter, and ammeter. These three instruments are most often available in one multi-instrument called a multimeter. Two other electrical meters occasionally used are the power factor meter and wattmeter. In HVACR, most electrical system and motor troubleshooting can be done with just one of these instruments: the multimeter, which can measure voltage, current, resistance, and other variables, depending on the model. In addition to these instruments, a service technician's toolkit should include insulated gloves rated for high-voltage use and protective eyewear. Tool sets should also include screwdrivers and pliers that are properly insulated.

17.1.1 Voltmeters

The instrument used to measure voltage in electrical circuits is called a ***voltmeter***. A voltmeter measures the potential difference between two points in a circuit. If there is no potential difference between two points, there will be no voltage reading. For instance, if a voltmeter is used to measure the voltage across a length of conductor that has no electrical load or virtually no resistance, there will be little, if any, voltage. This is because there must be an electrical load or a resistance of some sort for there to be a potential difference (a voltage drop) between two points in a circuit.

Voltmeters are either analog or digital. Analog voltmeters use magnetism to move a needle across a scale and show the voltage supplied to an electrical device. Digital voltmeters use solid-state circuitry to measure voltage. Having no moving parts, digital voltmeters display their readings on a small screen.

Voltmeters have two leads: one red and one black. Each voltmeter lead is placed on either side of an electrical load, and then power is applied to the circuit to measure the voltage drop across that load. A voltmeter is connected in parallel with the load or circuit it is measuring, **Figure 17-1**.

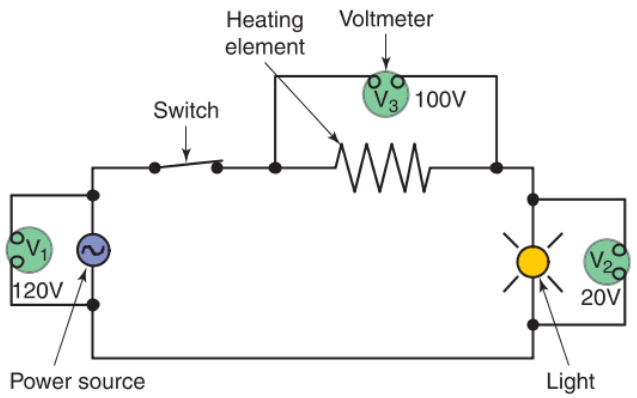

Goodheart-Willcox Publisher

Figure 17-1. Voltmeters connected in parallel are measuring the voltage of the input power (V_1), the voltage drop across a light (V_2), and the voltage drop across a resistive heating element (V_3).

Pro Tip

Meter Checks

Before taking any electrical measurements, there are several things to consider and check:

- Measurement setting.
- AC/DC (polarity).
- Leads in the jacks.

Setting the measurement variable is not difficult: *A* for amperage (current), Ω for ohms (resistance), and *V* for voltage. But for amps and volts, remember to choose the right type: ac or dc. Also, remember to check whether the leads are plugged into the proper jacks on the meter. Often, the red lead needs to be moved to another jack to measure amperage, **Figure 17-2**.

Milwaukee Electric Tool Corp.

Figure 17-2. Match the measurement setting and the jacks into which the leads are connected.

Copyright Goodheart-Willcox Co., Inc.

There are only two types of voltage to measure: direct current (dc) voltage and alternating current (ac) voltage. A technician must know the type of current in a circuit in order to set the meter's function switch to the correct type of voltage. In ac circuits, a voltmeter reads the voltage without regard to polarity because the current is constantly changing directions.

In dc circuits, the polarity of the measured voltage is affected by the side of the load on which each voltmeter lead is placed. To measure voltage polarity correctly, place the black lead on the side of the load closest to the negative terminal of the circuit's power supply and the red lead on the side of the load closest to the positive terminal of the circuit's power supply. By being familiar with a circuit's wiring diagram, a technician can determine on which side of the load to connect each lead.

Caution

Voltmeter Polarity

Because current is flowing in only one direction in a dc circuit, there is an unchanging polarity. Connecting an analog voltmeter's leads incorrectly will make the needle try to move backward, which may damage the meter in high-voltage dc applications.

Voltmeters are designed to measure different voltage ranges, from low voltage measured in microvolts to high voltage measured in megavolts. The following are common units of voltage:

1 microvolt (μV) = 0.000001 V (1/1,000,000 of a volt)

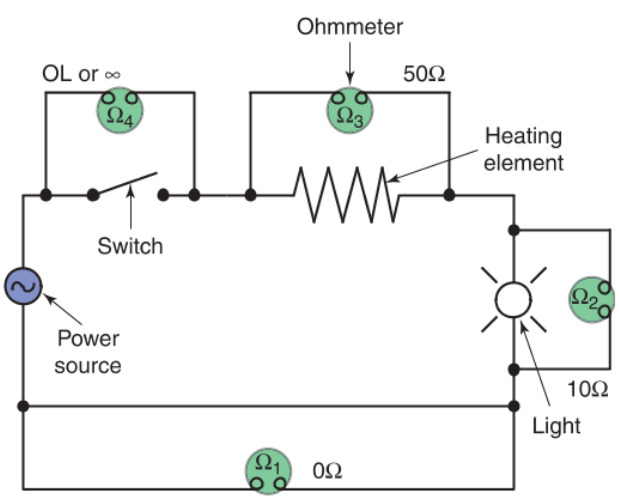

Goodheart-Willcox Publisher

Figure 17-3. Connecting an ohmmeter in parallel enables a technician to check the continuity of a conductor (Ω_1) or to measure the resistance across a device, such as a lamp (Ω_2), a heating element (Ω_3), or an open switch (Ω_4).

1 millivolt (mV) = 0.001 V (1/1000 of a volt)
1 kilovolt (kV) = 1,000 V
1 megavolt (MV) = 1,000,000 V

Before taking a voltage reading, ensure that the voltmeter's leads are in the correct meter jacks and that the voltmeter's range switch is set to the correct voltage scale. Most residential air-conditioning and refrigeration applications use 120 V or 240 V of alternating current. Low-voltage circuits usually operate at 24 V. Electronic circuits, including many control circuits, are often measured in low dc voltage, from 1 V to 25 V.

Caution

Voltmeter Range Switch

When measuring voltage, always set a voltmeter's range switch to a higher voltage setting than is expected from the circuit. For example, when checking a 120 V circuit, set the range switch to the 240 V setting. This prevents damage to the meter if there is a voltage surge or higher than expected voltage.

6

17.1.2 Ohmmeters

An *ohmmeter* is a meter used for measuring the electrical resistance in circuits. In addition to measuring specific resistances, ohmmeters may also be used to check for short circuits, open circuits (circuit continuity), and shorts to ground (ground faults). An ohmmeter is connected in parallel with a load or circuit after applied voltage has been turned off and locked out. An ohmmeter applies its own voltage to the load as part of its measuring process. This known voltage is provided by a low-voltage battery inside the meter, **Figure 17-3**.

Caution

Ohmmeter Usage

Be certain to turn off a circuit's power before taking resistance readings with an ohmmeter. Otherwise, the instrument may be ruined. Take voltmeter readings across switches and electrical loads in series with the intended resistance reading to ensure that no voltage is present.

When measuring the resistance across an open switch, the reading should be either ∞ (infinity) or *OL* (overload). This means that the resistance is so high that the meter cannot measure the resistance value. When checking the continuity of a conductor, the ohmmeter reading should be zero. If the meter reads zero (0 Ω), it means there is no resistance, which indicates that the conductor is not broken and that all the

Copyright Goodheart-Willcox Co., Inc.

connections are good. If the meter reads ∞ (infinity), the conductor has an open. This could be a broken connection, a blown fuse or circuit breaker, or other unknown cause of an open circuit.

Pro Tip

Ohmmeter Measurements

Taking resistance measurements can be problematic in circuits. Whenever possible, disconnect a device from the rest of the circuit before measuring its resistance. Disconnecting both sides of a device may not be possible, but by disconnecting at least one leg of the device, a technician can ensure that the ohmmeter reading will be across the intended device and not through the rest of the circuit. Be familiar with a circuit's electrical diagram to avoid accidentally taking any unintended or false readings.

17.1.3 Ammeters

An ***ammeter*** is an instrument that measures current in amperes in a conductor. There are two types of ammeters: clamp-on ammeters and in-line ammeters. A clamp-on ammeter makes it easy to measure alternating current because it is not necessary to disconnect wires or attach leads to obtain a reading. In-line ammeters require the circuit to be opened and then have the meter connected in series with the circuit. Most electrical work in HVACR can be performed with a clamp-on ammeter, **Figure 17-4**.

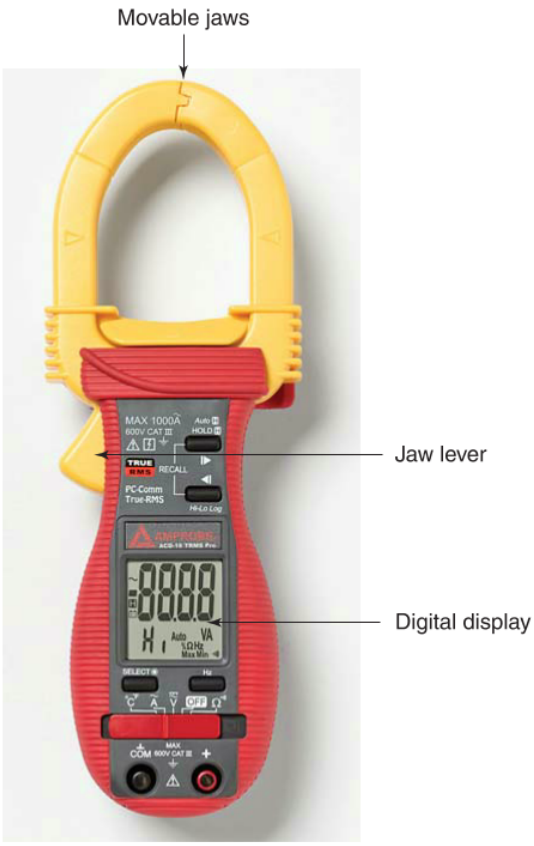

Amprobe

Figure 17-4. A digital clamp-on ammeter measures a conductor's current draw when the movable jaws are closed around the conductor being tested.

Clamp-on Ammeters

A ***clamp-on ammeter*** is an ac ammeter that senses and measures current based on the magnetic field produced by the alternating current flowing through a conductor. In the same way that a transformer uses a primary coil to induce current in a secondary coil, the current flowing through a conductor induces current in the coil of wire inside the clamp-on ammeter's jaws. The jaws can be opened, slipped around a conductor, and closed again. The current generated in the jaws by the conductor's electromagnetic field is measured by the ammeter and shown on a digital display. Clamp-on ammeters often have other functions as well, such as settings for measuring voltage and resistance, **Figure 17-5**.

Only a single wire of a circuit should be placed in the jaws of a clamp-on ammeter. Current in an ac circuit flows through the ungrounded (hot) and grounded (neutral) wires to an electrical load and back. The current measured in either wire represents the current draw of the electrical load. If a technician places the

Milwaukee Electric Tool Corp.

Figure 17-5. A clamp-on ammeter is clamped around only one conductor of a particular circuit to determine the circuit's current draw.

Copyright Goodheart-Willcox Co., Inc.

clamp-on ammeter around both the hot and neutral wires, the currents will cancel each other out, and the reading will be zero.

Pro Tip

Obtaining Low-Amperage Readings

There may be circuits in which the current is too low for a clamp-on ammeter to accurately measure. If the wire is long enough for free movement, wrap the wire multiple times around the jaws to get a higher reading. Wrapping the wire around the jaws ten times is an easy and effective method for reading low current values. Divide the reading by ten to convert to the actual current level. This wire-wrapping procedure is not recommended for wire that is 10 AWG or larger.

In-Line Ammeters

An ***in-line ammeter*** is an ammeter that is connected into a circuit with leads to measure the circuit's current. An in-line ammeter's inner circuitry has low-resistance shunt resistors placed across its terminals. These shunt resistors protect the ammeter's sensing coil and allow it to measure high levels of current. Unlike voltmeters and ohmmeters, in-line ammeters are connected in series (in-line) with the circuit or load being tested, **Figure 17-6**.

In a dc circuit, verify that the ammeter's leads are connected correctly to match the polarity of the power source before energizing the circuit. The black lead is placed on the side of the load closest to the negative terminal of the circuit's power supply, and the red lead is placed on the side of the load closest to the positive terminal of the circuit's power supply.

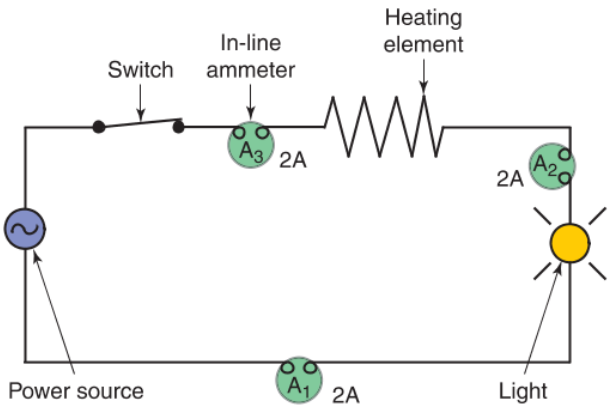

Goodheart-Willcox Publisher

Figure 17-6. An in-line ammeter is connected in series with the circuit or load being measured. Because this is a series circuit, there is only one path for current to travel, so each ammeter will have the same reading.

Using an In-Line Ammeter

A circuit must be opened before a technician can take a measurement with an in-line ammeter. Find a location in the circuit that has a wire that is in series with the electrical load to be measured and that can be easily disconnected.

1. To avoid shock or arcing, turn off power to the circuit. Test for voltage across the electrical load and any switches between the shutoff switch and the load. There should be no voltage in the circuit. If there is voltage, there may be a short in the circuit.
2. If there is no voltage, disconnect the previously located wire in series with the load to be tested.
3. Turn on the ammeter and adjust it to the setting for ac or dc amperes, depending on the type of circuit. Make sure the meter leads are plugged into the correct jacks on the meter.
4. Review any circuit diagrams to determine the expected current reading and set the range switch for the ammeter to the correct setting for the expected current level.
5. Connect one of the ammeter leads to the disconnected wire. If the ammeter only has probe leads, attach suitably sized, insulated alligator clips.
6. Connect the other ammeter lead to the terminal to which the disconnected wire was previously connected.
7. Gently wiggle the clips to ensure that both are securely attached.
8. Restore power to the circuit and read the measurement on the ammeter.
9. After taking any measurements, shut off the power, remove the ammeter leads, reconnect the disconnected wire to its terminal, and restore power to the circuit.

Caution

Blowing an Ammeter's Fuse

When an ammeter is connected in series, current through the meter is limited by the total resistance in the circuit. If an in-line ammeter is accidentally connected in parallel, it may blow a fuse. This occurs because current flow is limited only by the resistance in the meter, which is a lot lower than the circuit's resistance, resulting in higher current flow.

Copyright Goodheart-Willcox Co., Inc.

17.1.4 Multimeters

A ***multimeter*** is a single electrical meter that can measure multiple variables, such as voltage, current, and resistance. A multimeter is also known as a volt-ohm-milliammeter (VOM). **Figure 17-7** shows a typical digital multimeter used by HVACR technicians.

Most multimeters are digital instruments; however, analog meters that use a needle for display are still in use. Some service technicians prefer analog meters, as they can quickly see the needle move as opposed to having to read a digital number. Beyond measuring voltage, current, and resistance, digital multimeters (DMMs) often come with a variety of functions, such as a diode check and continuity check, along with the ability to measure capacitance (in farads), and frequency (in hertz). In some cases, special attachments allow even more variables to be measured, such as temperature, wind speed, relative humidity, luminance (light level), and acidity/ alkalinity (pH), **Figure 17-8**.

Caution

Connecting Leads to Multimeter Terminals

When taking various measurements with multimeters, it is extremely important to make sure the leads are plugged into the correct terminals on the multimeter. Refer to **Figure 17-7**. The red lead is always connected to one of the positive (+) terminals on the meter, and the black lead is connected to the common (–) terminal.

Diode Check

A multimeter's diode check function allows a technician to determine if a diode is functioning properly. This function selection is usually indicated by the schematic symbol for a diode. The meter also shows how much

Sealed Unit Parts Co., Inc.

Figure 17-7. An HVACR technician must be familiar with the numerous functions and settings on a digital multimeter.

Copyright Goodheart-Willcox Co., Inc.

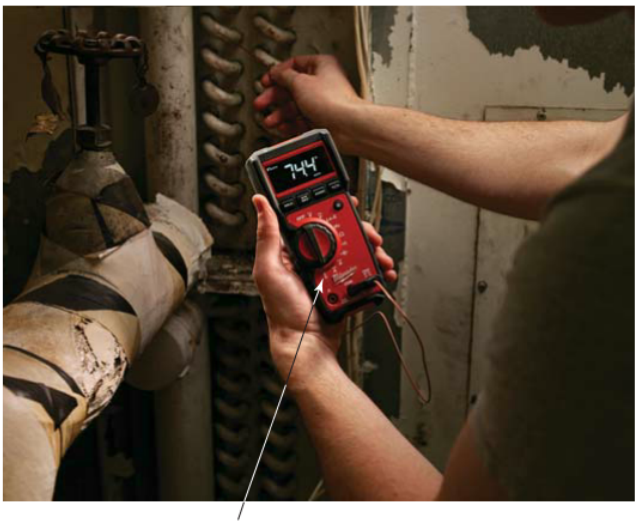

Milwaukee Electric Tool Corp.

Figure 17-8. HVACR technicians commonly use multimeters that have a thermocouple attachment to use with a temperature measurement function.

voltage is conducted across the terminals. A properly operating diode will conduct current in only one direction, which means the meter will register a voltage for only one of the two meter lead configurations.

Pro Tip

Diode Polarity

A technician must be able to determine which end of a diode is the cathode and which is the anode. Generally, one end of a diode is marked with a line, stripe, ring, or other marking that indicates the side closest to the cathode.

To check a diode, start by turning off power to the circuit and disconnecting at least one of the diode leads from the circuit. Leaving both diode leads in the circuit may result in false readings. When a meter registers a voltage on a properly operating diode, the red meter lead is connected to the diode's anode (positive lead), and the black meter lead is connected to the diode's cathode (negative lead). If the meter registers a voltage for both meter lead configurations, then the diode conducts in both directions and must be replaced. If the meter does not register a voltage in either direction, then the diode does not conduct and must be replaced.

Continuity Check

Continuity is the condition that exists when there is a continuous, unbroken path between two points in a circuit. A circuit that has continuity is also referred to as a *closed circuit* because the circuit is complete. The continuity check function on a multimeter is used for quick checks to see if there is a definite connection between two points in a circuit. Occasionally, meters will display the resistance between the points being checked; however, the most common and notable indication of whether continuity exists is an audible beeping. If the multimeter does not beep, it means the circuit is open.

Frequency Check

Frequency is a measure of the number of cycles that occur per second in an ac circuit. Most power in North America is supplied at 60 Hz. However, some electronic devices, such as variable speed motors, may require special frequencies supplied by VFDs (variable frequency drives). As a result, it may be necessary to use a multimeter's frequency function to verify that an electrical load is receiving power at the correct frequency. It is also a good practice to confirm that the incoming line voltage is in fact operating at 60 Hz. If a motor or other device is not receiving the proper frequency, it may cause the motor or device to draw too much current and overheat.

6

17.1.5 Power Factor Meters

A circuit's power factor is the relationship between the circuit's true power (in watts) and apparent power (in volt-amperes). Power factor is the ratio of a wattmeter reading (true power) to calculated power (apparent power). A ***power factor meter*** is an instrument used to provide a direct reading of the power factor in an electrical circuit. A power factor meter saves time because it prevents the technician from having to take several measurements at different settings and then perform calculations to determine the power factor.

A power factor meter first determines the apparent power in a circuit. It finds the product of the measured voltage multiplied by the measured current. It then determines the circuit's true power by measuring its wattage. The ratio of the true power to the apparent power is determined and displayed. This value is the power factor. It is always a number between 0.0 and 1.0.

Power factor meters can be used to assist in increasing the effectiveness of a circuit. For example, assume a circuit has a measured power factor of 0.8, meaning that 80% of the total possible power is being used. This value is quite common in an inductive circuit, such as one with a motor or transformer. The proper addition of a capacitive load would result in an increase in true power. This increase would then bring the power factor closer to 1.0. Electric utility companies usually limit the power factor allowable in industrial and commercial loads. Normally, a power factor of at least 0.85 or 85% is required.

Copyright Goodheart-Willcox Co., Inc.

17.1.6 Wattmeters

A *wattmeter* is an instrument used to measure the true power, or wattage, used by a circuit or an electrical load. Like an ammeter, a wattmeter is connected in series with the circuit being measured. Its reading automatically adjusts for a circuit's power factor. To help in checking electrical circuits, many companies list the volt-ampere (VA) values for their equipment. A wattmeter is often used to confirm that a load is operating at the correct power level. For example, a manufacturer may list a motor as a 120 V single-phase motor with 1.1 VA under a full load. The technician can then check the motor with a voltmeter and clamp-on ammeter to find out if the motor is operating correctly, or simply use a wattmeter to compare to the rated value.

Thinking Green

Wattage Readings

HVACR technicians use wattage readings to determine if an electrical load is operating efficiently. For example, if a motor is consuming more than its rated watts, it is consuming more electricity, making its operating costs higher.

17.1.7 Electrical Insulation Testers

Extreme temperatures, dirt, oil, and mechanical stress can break down insulation on conductors over time. For instance, when a motor overheats, the insulation on the motor windings often breaks down. The insulation on windings keeps current in the motor circuit, but burnt or heat-damaged insulation may allow current to seek ground out of the circuit. This can create a dangerous shock hazard and also cause an equipment breakdown due to a short circuit in the windings or a short to ground (ground fault). An electrical insulation tester is an instrument used to detect current leaks or possible areas of insulation failure along conductors, **Figure 17-9**.

Electrical insulation testers, also called ***megohmmeters***, are often used to test motor winding insulation, but can also be used to test the insulation on other electrical devices. Like an ohmmeter, a megohmmeter measures resistance by applying a known voltage supplied by the meter. However, because the resistance of the tested insulation is often in the megohm (MΩ) range (1 MΩ = 1,000,000 Ω), a megohmmeter must apply a very high voltage to obtain an accurate reading, usually between 500 V and 1000 V of direct current. Due to this high voltage, a megohmmeter should only be used by an experienced technician because the motor windings and insulation may be further weakened or damaged if a high voltage is applied for an excessive period of time during testing.

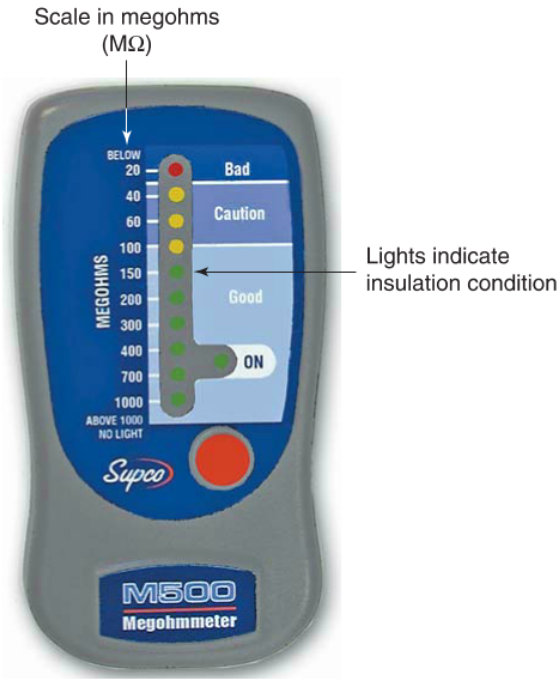

Sealed Unit Parts Co., Inc.

Figure 17-9. An insulation tester is used for testing the resistance of electrical insulation and can measure electrical resistance up to 1000 MΩ.

Pro Tip

Insulation Damage from Overloads

It is important to test a motor's winding insulation after an overload. Overloads can heat motor windings to the point of breaking down the insulation. If possible, review a system's service records. Be sure to ask the system's owner how often overloads have occurred in the past.

Caution

Insulation Testing under Vacuum

When a system is under vacuum, do not perform an insulation test. Without refrigerant and oil in the system and the compressor, the readings will be inaccurate. In addition, electrical arcing may occur, burning the windings.

Testing a Hermetic Compressor's Winding Insulation

If possible, operate the compressor for at least one hour before testing its winding insulation. By doing this, a technician can compare readings taken on different days because the winding temperatures will be approximately the same.

1. Disconnect power from the motor circuit.
2. Isolate the compressor electrically by disconnecting all wires from the compressor terminals.

Copyright Goodheart-Willcox Co., Inc.

3. Wipe the terminals clean with a dry towel.
4. Connect a shunt or jumper wire across all of the compressor terminals. To ensure that the only resistance tested by the meter is between the winding insulation and the ground, all three terminals are wired together.
5. Connect the black meter lead to any bare metal part on the compressor dome. Be sure this spot has no paint or coating on it. If necessary, wipe or gently file a spot to expose bare metal.
6. Connect the red meter lead to one of the motor terminals, **Figure 17-10**.
7. Activate the megohmmeter. Refer to the manufacturer's instructions to verify how long to energize the megohmmeter to produce an accurate reading.
8. Read the meter and write the results of the measurement on a service record.
9. Remove both of the meter leads (red first, then black) and then remove the terminal shunt or jumper wires.
10. Reconnect the proper system wiring and restore power to the circuit.

In general, a megohm reading of 100 MΩ or higher indicates that the motor winding insulation is in excellent condition. Readings less than 100 MΩ indicate that there may be an issue with the insulation. In addition to testing the winding insulation in a hermetic compressor, a megohmmeter provides a snapshot of the level of moisture and contaminants within the refrigerant and oil mixture. As contaminants in the refrigerant and oil mixture increase, they cause the motor winding insulation to break down, decreasing the insulation's electrical resistance. **Figure 17-11** shows

Sealed Unit Parts Co., Inc.

Figure 17-10. Checking the winding insulation on a hermetic compressor. The black lead is connected to a bare metal portion of the compressor dome. The red lead is connected to one of the motor terminals.

Motor Insulation Conditions and Maintenance Procedures

Insulation Resistance Measurement	Indicated Condition	Preventive Maintenance
Over 100 MΩ	Excellent insulation.	No action necessary.
60–100 MΩ	Some insulation breakdown, some moisture present.	Change filter-drier. If possible, clean dust and debris from windings using a solvent to prevent further insulation breakdown.
40–60 MΩ	Overheated winding, contaminated oil, moisture in the system.	Change filter-drier. Check the oil for a burnt odor, which indicates an overheated winding. If there is no odor, the oil is contaminated and needs to be changed.
20–40 MΩ	Severe oil contamination, system likely to fail soon.	Change oil and filter-driers. If old oil has a burnt odor, check the system's motors, including fan motors, for worn bearings.

Goodheart-Willcox Publisher

Figure 17-11. Hermetic compressor motor conditions and preventive maintenance procedures as indicated by different ranges of motor winding resistance.

Copyright Goodheart-Willcox Co., Inc.

the motor conditions indicated by different insulation resistance measurements.

Pro Tip

Motor Insulation Measurement Record

Record a system's motor insulation measurements in both column and graph format. These two records provide an easy method of observing insulation resistance trends over a long period of time. After installing a new motor, take an insulation resistance measurement as the first in a series of important system records. Review and compare these records each time the system is serviced.

After performing any maintenance on a motor, wait a few weeks to take another megohmmeter reading. If the reading remains the same or rises to a higher resistance, then another megohmmeter reading is not necessary for a few months. If the megohmmeter resistance reading has decreased, warn the owner that the compressor motor may fail soon, and list other parts of the system (such as fans and switches) that could be damaged from such a breakdown. Preventive maintenance is almost always better and more cost effective than repairing a failed system.

17.2 Troubleshooting Electric Motors

Maintenance, troubleshooting, and repair of electric motors and electric motor accessories are a major part of a service technician's job. A technician must understand the principles of electricity and know how to use various instruments and tools to accurately determine the cause of motor trouble.

If a motor is severely damaged and must be replaced, use the motor nameplate to obtain the required motor specifications. Ensure that the replacement motor has the same specifications as the original motor. Sometimes a replacement motor from another manufacturer can be found by using a manufacturer chart to cross-reference comparable models. The replacement motor can never have a current draw less than the motor being replaced, but it may have a current draw that is 10% greater.

17.2.1 Determining Motor Troubles

Motors fail or become inefficient due to overuse, age, or the development of internal problems. For example, if a unit is undersized for its application, the motor may run continuously. This continuous use may exceed the motor's time rating, which could lead to motor failure.

For belt-driven blowers, fans, and compressors, noisy operation is a common sign of a motor problem. This may be an indication that the belt is too tight and is placing stress on the motor shaft. It may also mean that the belt is slipping. An excessively tight belt can wear out the motor's bearings prematurely. A slipping belt can result in the motor operating continuously to maintain airflow.

For hermetic compressors, one way to determine the motor's condition is to measure the unit's power consumption. Approximate wattage readings for small hermetic compressors are shown in **Figure 17-12**.

When testing a hermetic compressor, a wattmeter will provide two different wattage readings:

- Combined start and run winding reading (until start winding circuit is opened).
- Run winding reading during motor operation.

To test a hermetic compressor, an analog wattmeter provides the most functionality. When the thermostat contacts close, the wattmeter indicator should swing to the right and then quickly move to the combined start and run winding reading. In a few seconds, the indicator will fall to the run winding reading only. However, if the start winding circuit is open on start-up, the wattmeter indicator will swing to the right and then move back to the run winding value, without stopping for a few seconds at the combined start and run winding value. This action indicates a bad relay or start winding. Wattmeters with digital displays often move too quickly to pick up this movement.

Another method of determining a motor's condition is to measure the motor's current draw. Excessive wear can eventually seize a motor. If the motor is seized, its current draw may exceed the motor's locked

Hermetic Compressor Wattage at 120 V

Motor Horsepower	Running Wattage		Starting Wattage
	70°F Ambient Temperature	110°F Ambient Temperature	
1/16	66	100	375
1/9	117	160	740
1/8	108	163	743
1/7	160	218	970
1/4	235	320	1250

Goodheart-Willcox Publisher

Figure 17-12. The approximate running and starting wattages for 120 V single-phase hermetic compressors from 1/16 hp through 1/4 hp. When comparing measurements, be aware of the ambient temperature.

Copyright Goodheart-Willcox Co., Inc.

rotor amperage (LRA). When recording current draw, a technician should measure both locked rotor amperage (LRA) and full-load amperage (FLA). If either amperage is above specifications, it could signal that the motor is significantly worn and needs to be replaced.

Motor Capacitors

Motor capacitors are a common cause of motor starting and running problems. Most motors have only one capacitor, but some have two or more. In either case, there are only two types of capacitors: start capacitors and run capacitors.

Pro Tip

Capacitor Wiring

When more than one capacitor is connected in parallel, each capacitance value is added, providing a higher total capacitance level ($C_T = C_1 + C_2 + \ldots$). When more than one capacitor is connected in series, it raises the voltage level the capacitors can handle ($V_{CT} = V_{C1} + V_{C2} + \ldots$).

Run and start capacitors are not interchangeable. They are designed differently to perform different functions in a motor circuit. Run capacitors are filled with oil to dissipate large amounts of heat. They heat up because they perform continuously during motor operation. In other words, whenever the motor is running, the run capacitor is charging and discharging.

Start capacitors do not need to dissipate heat quickly because they are only used intermittently for motor start-up. They only charge and discharge when they are in the motor circuit, which is just for the brief period of time that the motor is starting. This allows start capacitors to be designed as dry electrolytic capacitors.

Caution

Capacitor Overload

Capacitors contain an internal protection device that bursts when they overload. It is usually indicated by a small depression on the top of the capacitor. This small dimple expands when the capacitor has been overloaded. Always discard a capacitor that appears to have been overloaded.

Some capacitors have mechanical connectors, such as machine screws, while others have spade terminals or solder leads. Depending on the size of the wire connecting the capacitor to the motor circuit, use either a small electric soldering iron or a soldering gun to connect capacitor solder leads.

Many capacitors have a resistor connected across their terminals called a bleed resistor. A ***bleed resistor*** slowly discharges or bleeds a capacitor's charge during a motor's Off cycle. This reduces arcing at the motor contacts on start-up, which may occur if the motor cycles on and off frequently. Although a capacitor may have a bleed resistor, it still must be discharged using another resistor to ensure there is no charge left in the capacitor.

Safety Note

Capacitor Case

Never place your fingers across the terminals of a capacitor. When discharging a capacitor, place it in a protective case, then discharge it through a resistor connected between the terminals.

Discharging and Testing a Capacitor

An HVACR technician must be able to discharge a capacitor before the capacitor can be tested with an ohmmeter. Proper discharging prevents harm to the technician and the equipment. Both start and run capacitors can be tested in the same way.

1. Turn off power to the motor circuit. Take several voltage readings across electrical loads to ensure there is no voltage present.
2. While wearing insulated gloves and protective eyewear, use insulated needle nose pliers to remove the capacitor from the circuit.
3. Place the capacitor in a protective case.
4. Place a 30 kΩ (30,000 Ω) resistor across the capacitor terminals for a few seconds.
5. The capacitor is now discharged.
6. Check that the capacitor is not shorted by placing an ohmmeter across both terminals. Set the range switch for the ohmmeter to a high setting (×100).
7. If the meter swings toward zero and then slowly returns to ∞ (infinity), the capacitor is good.
8. If the meter stays at zero or only returns part of the way to ∞ (infinity), the capacitor is defective.

Caution

Capacitor Discharging

Never short a capacitor with a piece of wire or a screwdriver. Shorting the terminals without a properly rated resistor may cause a sudden discharge that could rupture the thin metal foil in the capacitor.

Copyright Goodheart-Willcox Co., Inc.

A capacitor must be accurately suited to the motor and motor load. As a result, a replacement capacitor should have the same capacitance value as the old capacitor. If a capacitor of a different capacitance value must be used, a capacitance value up to 10% greater than the original value is generally acceptable. For example, a 110 µF capacitor can be used for a 100 µF capacitor because 110 µF is 10% greater than 100 µF. An undersized capacitor should never be used.

The make and model number are usually placed on each capacitor, **Figure 17-13**. If this information is unavailable, a technician should look in the motor manufacturer's service manual or use the Internet to cross-reference the capacitor type used by the motor. A technician may also use a capacitor tester to measure the actual microfarad rating of the capacitor. In addition, a multimeter with a capacitance function can help a technician measure capacitance to determine whether a capacitor is defective and needs to be replaced, **Figure 17-14**.

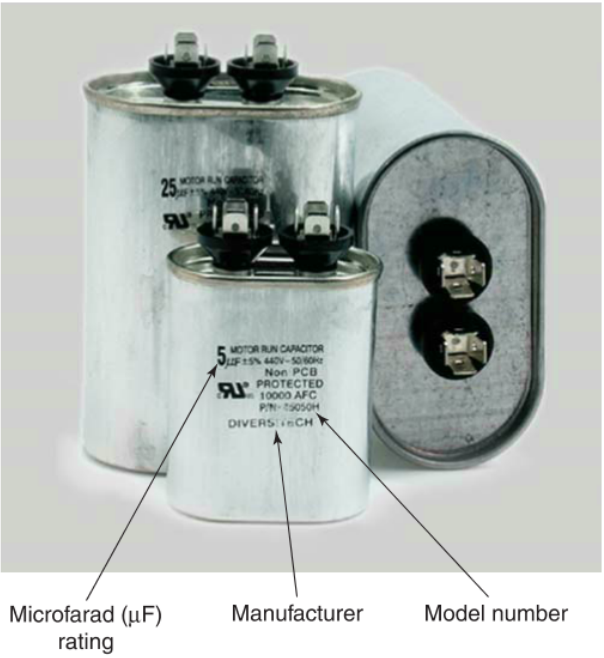

DiversiTech Corporation

Figure 17-13. Run capacitors with their microfarad ratings and model numbers stamped on them. A technician can use this information to order the correct replacement for a faulty capacitor.

Measuring Capacitance

Many multimeters used in HVACR have a capacitance function, indicated by a capacitor schematic symbol. Before taking capacitance measurements, be sure to turn off power to the motor circuit and take a few voltage measurements to ensure the power is off.

1. Discharge the capacitor to avoid getting shocked or damaging the meter.
2. If possible, disconnect the capacitor from the circuit to prevent any unforeseen interruptions or inaccurate readings.
3. Set the multimeter to the capacitance function. If it has more than one capacitance range, the upper value of the selected range should be higher than the capacitor's rated value.
4. Clip the red meter lead to the positive capacitor terminal.
5. Clip the black meter lead to the negative capacitor terminal.
6. Allow the reading to stabilize and compare it with the capacitor's rated value.
7. If the meter reads 0 µF or the numbers continually change, test the capacitor for a short by switching to the ohmmeter function on the multimeter. Follow the procedure from earlier in this chapter for testing a capacitor.

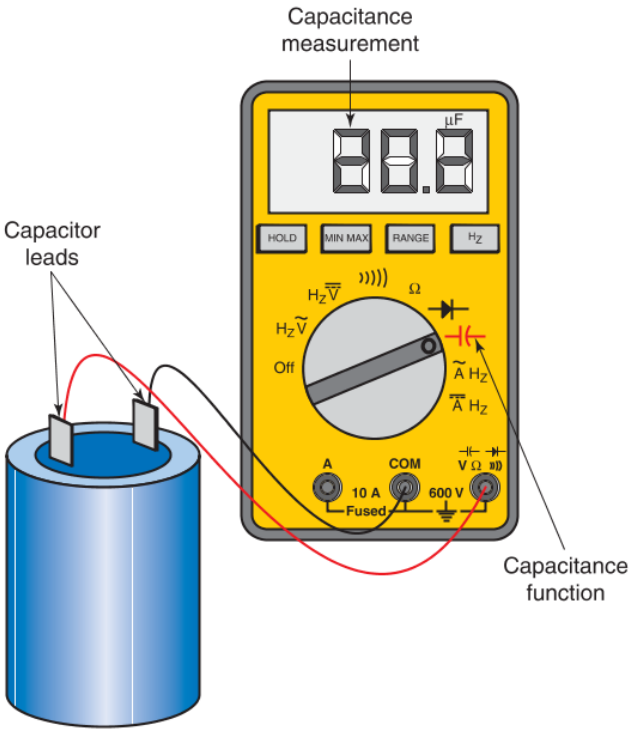

Goodheart-Willcox Publisher

Figure 17-14. Multimeter with its function switch set to measure capacitance. A technician must disconnect a capacitor from the motor circuit before measuring its capacitance.

Copyright Goodheart-Willcox Co., Inc.

Safety Note

PCB Capacitors

Some run capacitors are filled with a dielectric fluid called polychlorinated biphenyl (PCB). This fluid is dangerous. Do not open the shell of a capacitor with PCB fluid. If the shell is accidentally pierced or broken, be careful not to touch the fluid or breathe its fumes. Dispose of capacitors containing PCB fluid as if they were hazardous waste, following all local and national regulations.

Motor Temperature

Motors often overheat from excessive current draw. If a motor trips its overload protection device, check its current draw during normal operation and compare this value to the motor's rated full-load amperage (FLA), which can be found on the motor nameplate. For single-phase and three-phase ac motors, a clamp-on ammeter is most convenient for checking the motor's current draw. However, for dc motors, an in-line ammeter is necessary. If the current measurement exceeds design specifications, it is most likely the cause of an overheating motor. Current overloads can be caused by the motor having to operate under an excessive load. They may also be caused by a short in the motor windings.

The temperature of the hottest part inside a motor should not be more than 72°F (40°C) above the ambient temperature, which is the temperature of the air surrounding the motor. In general, this equates to an average, maximum internal temperature of approximately 150°F (66°C). A motor's rated ambient temperature is listed on the motor nameplate. This value indicates the maximum ambient temperature at which the motor can operate. To measure a motor's ambient temperature, use a thermometer to gauge the temperature of the air around the motor.

Pro Tip

Motor Cleanliness

Motors depend on ambient air for cooling. If the ambient air is too warm or if the airflow around the motor is restricted, the motor will overheat. Always check a motor for cleanliness and wipe off any dust, dirt, and debris. These can act as insulators, preventing proper air circulation and stopping a motor from dissipating as much heat as it normally would. Compressed air should be used to blow dirt out of the motor.

Measuring a motor's actual internal temperature is difficult. To better gauge the temperature inside a motor, a technician can use an infrared thermometer to check the temperature of the motor frame. Infrared thermometers allow a technician to measure the temperature of a surface from a distance, **Figure 17-15**.

Typically, a motor's internal temperature is about 20°F (11°C) higher than the temperature of the motor frame. By adding 20°F to the motor frame temperature, a technician can approximate a motor's internal temperature. An excessively high temperature can be an indication that the motor has a short circuit or a current overload. This can result in the windings becoming so hot that the winding insulation fails.

17.2.2 Single Phasing of Three-Phase Motors

Occasionally, a three-phase motor may blow a fuse or open a circuit breaker on only one phase. When a three-phase motor loses one or more of its three phases, it is called ***single phasing***. The motor will attempt to operate on the remaining two phases, but it may quickly overheat and burn out if the motor is operating under an excessive load. This is because the remaining two sets of windings must now carry the entire load. Each phase will operate on 1 1/2 times the normal full-load current to compensate for the lost phase.

Some three-phase motors have phase loss monitors that are used to shut down the motor if single phasing occurs. A ***phase loss monitor*** is similar to a fuse or overload protection relay. It constantly monitors the voltage of each phase of a motor's three-phase power supply. When one of the motor's three phases blows a fuse or opens a circuit breaker, the phase loss monitor opens the motor control circuit to stop the motor and prevent motor damage, **Figure 17-16**.

Milwaukee Electric Tool Corp.

Figure 17-15. An infrared thermometer uses invisible infrared light waves to measure surface temperature. Infrared thermometers cannot be used to detect air temperatures.

Copyright Goodheart-Willcox Co., Inc.

To test a three-phase motor for single phasing, begin by measuring the voltage at the motor terminals. If the voltage level is incorrect or not present for any of the three phases, check the power supply. If the correct voltage is present for all three phases, it indicates that the motor is the problem. Each set of windings can be tested individually with an ohmmeter, **Figure 17-17**.

SSAC, LLC

Figure 17-16. High-end phase loss monitors can be programmed to monitor against multiple adverse conditions and often have displays that can read measured variables and show trouble codes.

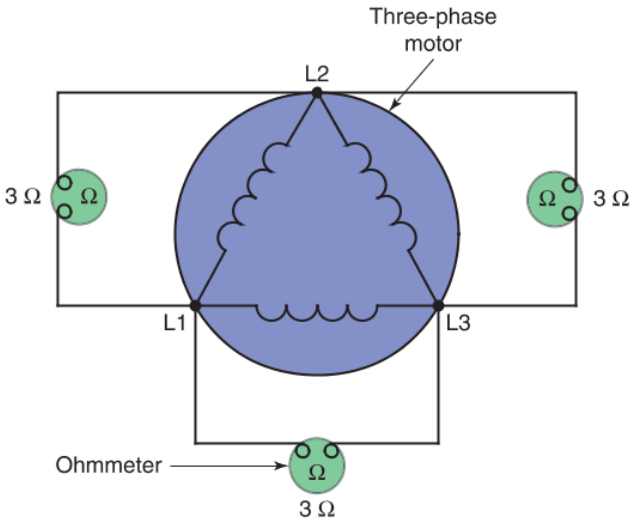

Goodheart-Willcox Publisher

Figure 17-17. All three sets of windings in a three-phase motor should have the same resistance when tested with an ohmmeter. This is true regardless of whether the motor has a delta configuration or wye configuration.

All three sets of windings should have the same resistance. If the resistance of the different windings is not equal, one of the sets of windings is either shorted or open, which means the motor must be either serviced or replaced.

17.3 Servicing Hermetic Compressor Motors

Servicing hermetic compressors involves two major areas of work: external servicing and internal servicing. Most hermetic compressor troubles are external, being either in the wiring or in the motor control devices. It is important to find out exactly where the electrical troubles are before deciding whether the motor is at fault. Furthermore, it is essential that any external trouble be remedied as soon as possible. If it is not, it may eventually cause the motor to fail. The proper steps and procedures for internal service of hermetic compressors are explained in Chapter 26, *Service and Repair of Domestic Refrigerators and Freezers*. Most of these problems have little to do with electricity and more to do with the refrigerant circuit.

17.3.1 Electrical Testing of Hermetic Compressor Motors

Although hermetic compressor motors malfunction due to the same problems as open-drive setups, such as short circuits and open circuits, a hermetic unit cannot be opened to inspect the motor directly. To check the condition of a hermetic compressor motor, a technician must test the motor electrically from the outside. This involves using an ohmmeter to measure the resistance between the compressor terminals. Because the resistance from terminal to terminal equates to the resistance of each motor winding, a technician can use ohmmeter measurements to check the motor windings for continuity, shorts, and shorts to ground.

Before taking measurements, be certain of the identity of each terminal. **Figure 17-18** shows a typical hermetic compressor terminal arrangement. To be safe, check the motor nameplate for terminal identification. If the terminals are not identified, use an ohmmeter to check the resistance of the different windings by touching the leads to the different terminal pairs. For a detailed procedure on identifying unmarked motor terminals, see Chapter 15, *Electric Motors*. **Figure 17-19** lists common winding resistance measurements for several low-horsepower motors.

Copyright Goodheart-Willcox Co., Inc.

Goodheart-Willcox Publisher

Figure 17-18. A technician can easily identify the terminals on this hermetic compressor because they are labeled *C*, *S*, and *R*. Before testing the compressor motor with an ohmmeter, remember to turn off power to the compressor and disconnect the wires from the motor terminals.

Checking Hermetic Compressors for Continuity and Shorts

Before taking any resistance measurements, be sure to turn off power to the motor circuit and take a few voltage measurements to ensure the power is off.

1. Visually inspect the compressor to see if it uses any start or run capacitors. If there are any capacitors, discharge them by touching a 30 kΩ (30,000 Ω) resistor across the capacitor leads for several seconds. Do not touch the capacitor leads or resistor leads while discharging the capacitor.
2. Disconnect the wires from the hermetic compressor motor terminals on the dome of the compressor to test the motor independent of its outside electrical connections. Make sure to mark which wire connects to which terminal using tags or color-coded tape.
3. Set the range switch for the ohmmeter to its lowest setting (×1 or ×10).
4. Check the resistance of each motor winding by touching the ohmmeter leads to different terminal pairs. See **Figure 17-20.**
5. If any of the measurements between the terminals read ∞ (infinity) or *OL* (overload), move the leads to different spots on the terminals to make sure the leads are making a clean connection. Dirt, oil, or poor contact between the meter leads and the terminals can result in an inaccurate, higher resistance reading.
6. If a measurement does not change from ∞ (infinity) or *OL* (overload) to somewhere near the accepted measurements in the table in **Figure 17-19**, it means there is *not* continuity in the winding. The winding has an open or break, and the motor needs to be replaced.
7. If a measurement is lower than the values in the table in **Figure 17-19**, especially if a value is near 0 Ω, there may be a short in the winding. A motor with a short in any of its windings needs to be replaced.

6

Hermetic Compressor Winding Resistance Measurements			
Motor Horsepower	Between Common and Running Terminal (Run Winding)	Between Common and Starting Terminal (Start Winding)	Between Running and Starting Terminals (Both Windings)
1/2	4.7 Ω	18.6 Ω	23.3 Ω
3/4	3.3 Ω	11.9 Ω	15.2 Ω
1	2.5 Ω	11.0 Ω	13.5 Ω
1 1/2	1.9 Ω	8.4 Ω	10.3 Ω
2	2.1 Ω	6.4 Ω	8.5 Ω

Goodheart-Willcox Publisher

Figure 17-19. Approximate ohmmeter readings across the terminals of several low-horsepower, single-phase motors.

Copyright Goodheart-Willcox Co., Inc.

Any short circuit in the motor windings will increase the current draw, decrease the power, and eventually overheat the compressor. A shorted winding can sometimes be detected by an interruption, such as the addition of a noticeable beat, to the steady hum of the motor when it is running. Hermetic compressor motors should also be checked for grounded windings or shorts to ground. A winding has a short to ground when part of the winding has made electrical contact with the frame of the motor. In the case of hermetic compressor motors, the compressor shell is the motor frame.

Checking Hermetic Compressors for Shorts to Ground

Checking a hermetic compressor for a short to ground is the same as testing the compressor's winding insulation. A technician can use either an ohmmeter or megohmmeter to take measurements. Before taking any resistance measurements, be sure to turn off power to the motor circuit and take a few voltage measurements to ensure the power is off.

1. Set the range switch for the ohmmeter to a high setting (×100 or ×1000).
2. Test each winding for a short to ground by touching the red lead to a compressor terminal and the black lead to any bare metal part on the compressor dome. Be sure this spot has no paint or coating on it.
3. If the measurements each read either ∞ (infinity) or *OL* (overload), the hermetic compressor motor is fine.
4. If the measurements read any value below ∞ (infinity) or *OL* (overload), then there is a short to ground in one of the windings. The entire hermetic compressor needs to be replaced.
5. If a megohmmeter is used, a reading of 100 MΩ or higher indicates that the motor windings are in excellent condition. Readings less than 100 MΩ indicate that there may be an issue with the winding insulation or refrigerant and oil mixture in the compressor, causing a short to ground in one of the windings.

17.3.2 Servicing a Stuck Hermetic Compressor Motor

Occasionally, a hermetic compressor motor will not start even though all the electrical tests indicate it is in good condition. This condition can have several

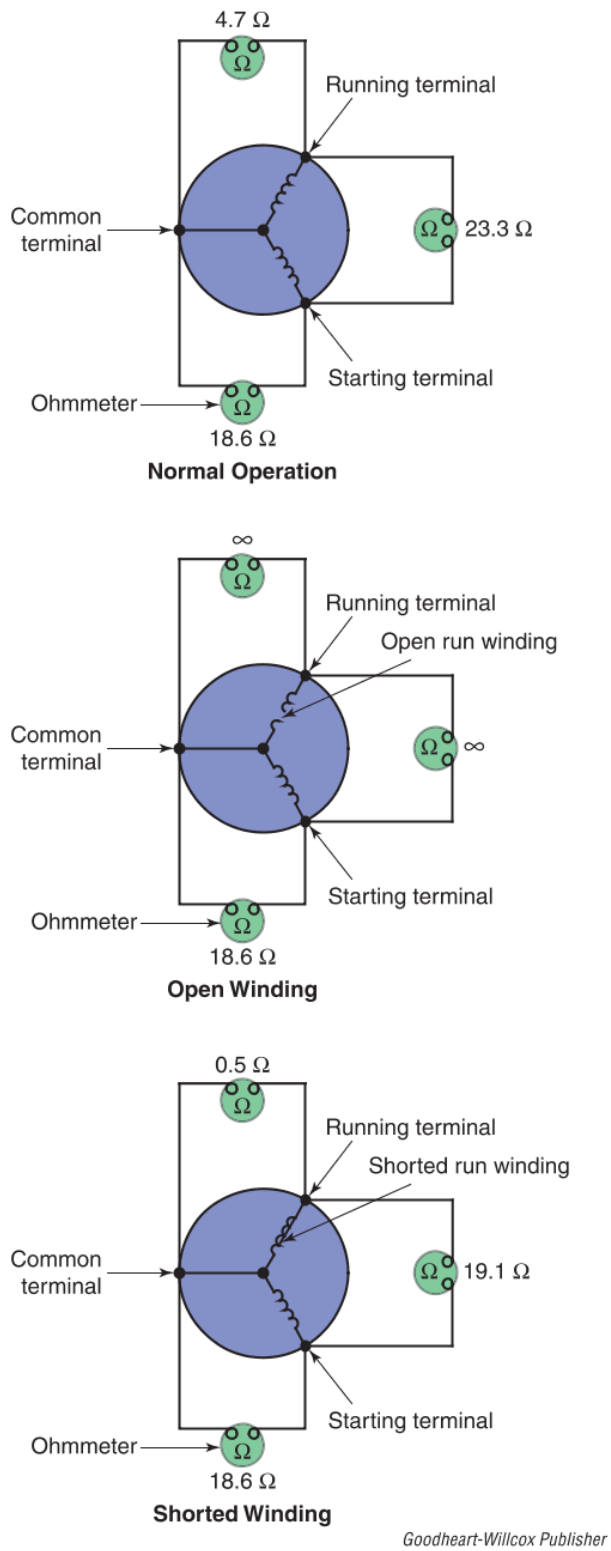

Goodheart-Willcox Publisher

Figure 17-20. When an ohmmeter is connected to the terminals of an open winding, the resistance measurement is ∞ (infinity). If a winding is shorted, its resistance measurement is much lower than its accepted resistance value, typically close to 0 Ω.

Copyright Goodheart-Willcox Co., Inc.

causes. The unit may have been idle for a considerable time, allowing dirt or contamination in the unit to settle. In other cases, some electrolytic plating of the windings may have taken place. An excessive amount of liquid refrigerant in the compressor can also bind the unit.

The most common method of starting a stuck compressor is to use a hard start kit. A ***hard start kit*** consists of a capacitor, a PTC or potential relay, and wires. Hard start kits are sized to the specific voltage and horsepower of a compressor. As a compressor ages, its windings deteriorate and friction causes wear to the rotor and shaft, which means the motor may require additional torque at start-up. Hard start kits essentially add a start capacitor to a system that previously did not have one, **Figure 17-21**.

Hard Start Method of Servicing a Stuck Hermetic Compressor

Before performing any service on a stuck hermetic compressor motor, select the appropriate hard start kit for the specific motor application. Compare the hard start kit's voltage and horsepower ratings to the data on the motor nameplate.

1. Turn off power to the compressor and take a few voltage measurements to ensure the power is off.
2. Remove the original compressor starting relay.
3. If the hard start kit has three wires, connect the red and white wires to the compressor's run capacitor. Connect the black wire to the common terminal on the compressor.
4. If the hard start kit has two wires, connect the wires to the starting and running terminals on the compressor.
5. Energize the compressor and cycle it on and off several times to ensure that the compressor start-up is successful.
6. With the compressor unstuck, the hard start kit can be removed and replaced with a new capacitor and existing relay, or the hard start kit may be left on the unit to replace the original equipment.

17.4 Servicing Fan Motors

In addition to compressors, HVACR systems use motors to drive condenser, evaporator, and blower fans. Many fan motors are low-horsepower, single-phase motors, such as shaded-pole motors and permanent split capacitor (PSC) motors. Electronically commutated motors (ECMs) are also commonly used to drive fans because they enable the fan to operate at variable speeds. Fan motor troubles can occur for a variety of reasons beyond just problems with the motor, from electrical problems to mechanical problems with the fan itself. The most common causes of fan motor troubles include the following:

- Loose connections.
- Dry bearings.
- Worn bearings.
- Burned-out motor.
- Loose fan.
- Out-of-balance fan.
- Fan blades touching the housing.

Sealed Unit Parts Co., Inc.

Figure 17-21. Hard start kits are available in three-wire and two-wire configurations. Two-wire hard start kits tend to be simpler to install and lower in cost.

17.4.1 Connection Problems

Loose or dirty connections cause excessive resistance at the connection, which in turn results in an excessive voltage drop at the motor. Loose connections can cause the fan motor to lose speed, hum loudly, or overheat. An ohmmeter can be used to locate the faulty connection. Do not rely on visual inspection.

Copyright Goodheart-Willcox Co., Inc.

Finding Connection Problems in a Fan Motor Circuit

Before taking any resistance measurements, be sure to turn off power to the fan motor circuit and take a few voltage measurements to ensure the power is off.

1. Set the range switch for the ohmmeter to ×100.
2. Clip the red ohmmeter lead to the positive connection on the fan motor wiring terminal.
3. Clip the black ohmmeter lead to the negative or common connection on the fan motor wiring terminal.
4. Record the resistance through the circuit.
5. Wiggle each of the wires to see if the resistance decreases.
6. If the resistance decreases, it is most likely from a loose terminal. Tighten or recrimp the fan motor terminals as needed.

17.4.2 Fan Problems

A rattle in a fan motor may sometimes be nothing more than a loose fan on the motor shaft. The noise can be remedied by tightening the setscrew that fastens the fan hub to the shaft. Smaller fans have either a round shaft or a flat spot milled on the shaft. Some fan blade hubs, however, are factory compressed onto the blade. If the hub breaks loose from the blade, replace the blade.

If a fan is overworked or misused, the blades may be forced out of position, causing one or more blades to vibrate. The easiest repair is to replace the fan. Attempts to balance the blades are difficult unless special static and dynamic balancers are available.

If the fan blades touch the fan housing, the motor may be misaligned. The fan housing or shroud may also be bent. The contact spot can often be detected easily. To remedy a misalignment, move the fan on the motor shaft or move the fan housing. Do not bend the fan blades, as this will cause the fan to be out of balance, which will make the unit vibrate.

17.4.3 ECM Troubleshooting and Service

Most variable speed motors used to drive fans are electronically commutated motors (ECMs). ECMs are brushless dc motors that are regulated by an integrated controller. The motor's controller precisely modulates motor speed based on programmed settings. Most ECMs have wiring harnesses that provide both 120 V power to the motor and lower voltage power to the motor's controller, enabling communication between the motor and the HVACR control system, **Figure 17-22**.

Service of an electronically commutated motor is usually done by reading trouble codes sent by the ECM to the HVACR system controller. When troubleshooting an ECM, try the following strategies:

- Check that the motor is being supplied 120 V power.
- Check the low-voltage control circuit to make sure the motor is communicating with the HVACR system.
- Check for burnt terminals, loose connections, and frayed or broken wires where any part of the conductor is exposed or not insulated.
- Follow the manufacturer's diagnostic chart or troubleshooting chart to detect any trouble codes set.
- Resolve codes by referencing the manufacturer's recommendations.
- Replace the motor controller board if it is found to be at fault and is accessible.

Pro Tip

ECM Troubleshooting

Most ECM manufacturers provide troubleshooting charts used to help a technician pinpoint problems with the circuit board in an ECM. The trouble codes are usually displayed on the HVACR system's controller as either a digital readout or a set of LEDs that indicate the trouble code. Typically, ECM circuit boards are not serviceable, but may be replaced.

Emerson Climate Technologies

Figure 17-22. Motor connections for electronically commutated motors provide the motor with 120 V power to run the motor and low-voltage power to the motor's controller.

Copyright Goodheart-Willcox Co., Inc.

17.5 Servicing External Motors

External motors are electric motors that are used in open-drive applications to power compressors and accessory devices, such as fans and blowers. Problems found in external motors can be either electrical or mechanical.

Electrical troubles found in external motors include open circuits, short circuits, and shorts to ground in the motor windings. In these cases, replacing the motor is recommended. Overheating is a common problem that results from frequent starting and stopping, which can cause a number of components to fail.

If a single-phase, external motor will not start but has the characteristic hum of a running motor, it is a sign that one or more of the following components has failed: the start capacitor, the centrifugal switch, or the motor starting relay. The hum indicates to the technician that current is flowing. However, the rotor is not rotating because it does not have the initial torque necessary for starting without the start capacitor in the circuit.

The first step is to test the capacitor, as described earlier in this chapter. It is easy to replace the old capacitor with a new one of the same capacitance. If the motor still will not start, the most likely cause is the centrifugal switch. If the switch's contact points are dirty, pitted, or burnt from overheating, do not try to repair them. Filing or sanding does little good, as the contact material has worn away. Repaired contact points typically last only a few hours, which means a callback will have to be made. It is best to just replace the contacts.

Mechanical problems in external motors are usually due to the motor's centrifugal switch or bearings. The centrifugal switch spring, which is used for connecting and disconnecting the start capacitor, may become deformed and out of calibration. In such cases, it is necessary to replace the switch. Other troubles may include worn bearings, excessive endplay, excessive vibration due to misalignment of the motor with the compressor, and improper air gap between the rotor and stator. Worn bearings typically result in a customer complaint that the fan is making too much noise, **Figure 17-23**.

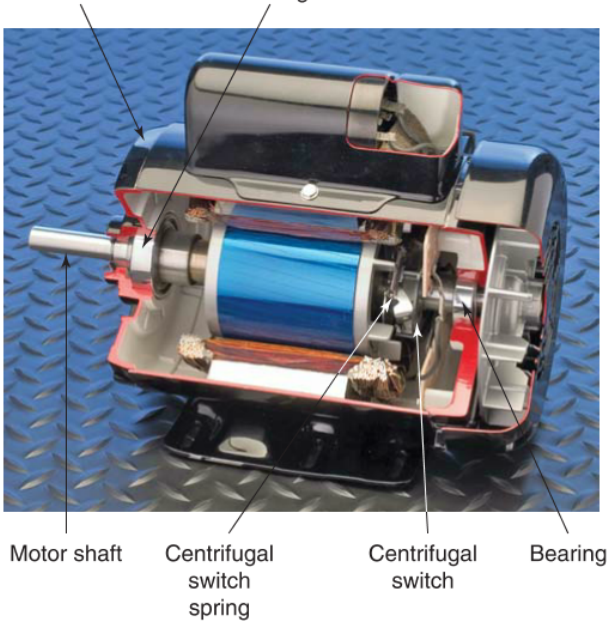

Photo courtesy of A. O. Smith

Figure 17-23. The location of the bearings, centrifugal switch, and centrifugal switch spring inside an electric motor.

17.5.1 Motor Lubrication

External motors may be lubricated in various ways. The system used depends on the motor's position (vertical or horizontal) and bearing type. Some external motors have an additional bearing component called a ***bushing***, which is essentially a cylindrical sleeve bearing used to reduce the friction and wear on the motor shaft as it rotates, **Figure 17-24**. External motors that use bearings equipped with bushings, plain or sleeve, can be lubricated in one of two different ways:

- Wick system.
- Slip ring system.

A ***wick lubricating system*** uses a well or reservoir in the end bell. A wick (fabric that draws up

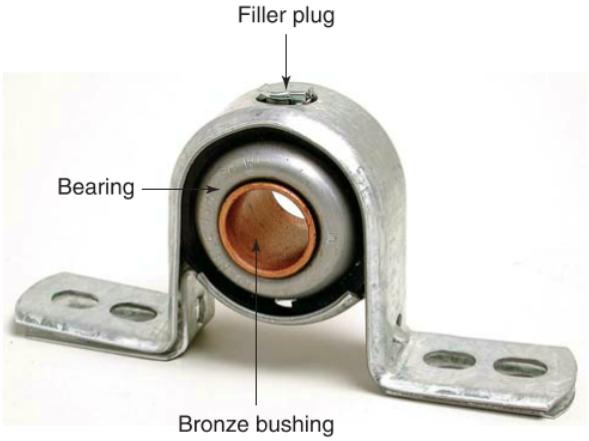

Dial Manufacturing, Inc.

Figure 17-24. Some bearings are equipped with an additional component called a bushing, which is typically made of bronze.

Copyright Goodheart-Willcox Co., Inc.

and holds oil) carries oil from the well to the bushing and shaft. This system allows long intervals between servicing and prevents the bearing from getting too much oil. Motors with a wick lubricating system have the cotton or wool wick saturated with oil when the motor is shipped from the factory. Before starting the motor, however, a technician should fill the oil well. Add the amount of oil designated by the manufacturer, **Figure 17-25**.

If the bearing is to be removed from the shaft or the bushing is to be removed from the end bell, the wick should be lifted clear of the bearing. This prevents the wick from being forced between the shaft and the bearing upon replacement. When replacing the wick, pack equal amounts on each side of the bearing and over the slot of the bearing, so the spring on the oil well cover will push the wick down on the shaft. Wick-lubricated bearings should be oiled with one or two drops every six months.

Some larger external motors use the ***slip ring lubricating system***. A brass ring rests on the motor shaft through a slot in the top of the bearing. The ring is large enough to dip into the oil well below. As the motor shaft turns, the ring turns and lubricates the bearing. See **Figure 17-26**. Be sure to check the ring when working on a motor with a slip ring lubricating system. Use a medium-viscosity, non-detergent oil such as SAE 20 or SAE 30.

Other external motors use ball bearings, which are contained within a top collar (also known as a top race) and a bottom collar (bottom race). These bearings are lubricated with grease, **Figure 17-27**.

Most ball bearing assemblies are sealed and do not need periodic lubrication. Others are installed in a collar that is equipped with a grease fitting, called a ***zerk fitting***. An ordinary grease gun is used to apply grease to this type of bearing assembly. See **Figure 17-28**.

Motors equipped with ball bearings are shipped with enough grease in the bearings to lubricate them for several months. A small amount of grease should be added every two or three months. Use high-grade, medium-weight grease on fully enclosed motors. Too much grease may cause the bearings to overheat.

The life of bearings depends, to a considerable extent, on cleanliness. Most greases and oils oxidize

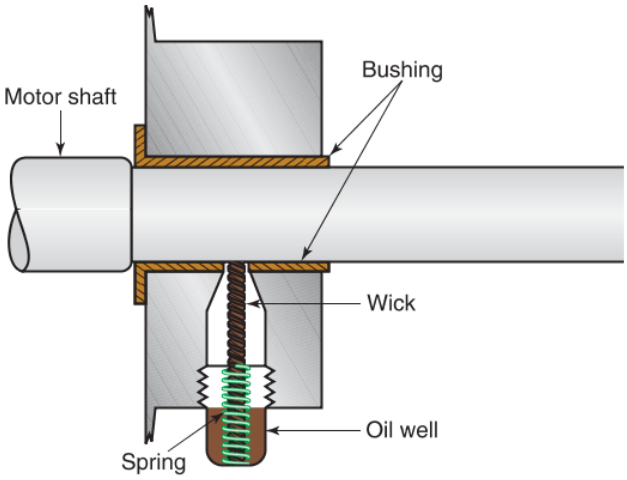

Spring-Loaded Wick

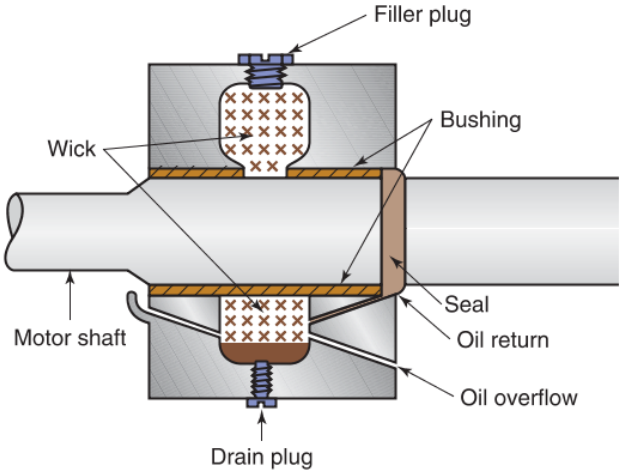

Yarn-Type Wick

Goodheart-Willcox Publisher

Figure 17-25. Two variations of wick lubricating systems. A spring-loaded wick draws oil from the oil cup and applies it to the motor shaft, while a yarn-type wick is saturated with oil throughout.

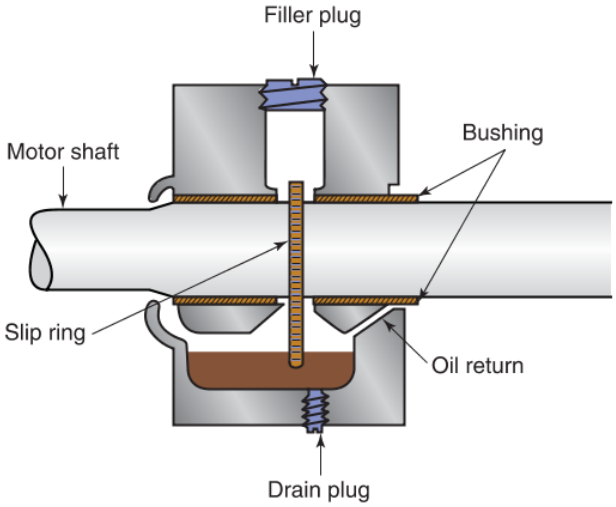

Goodheart-Willcox Publisher

Figure 17-26. A slip ring lubricating system has a brass slip ring that dips into the oil well and transfers the oil to the motor shaft.

Copyright Goodheart-Willcox Co., Inc.

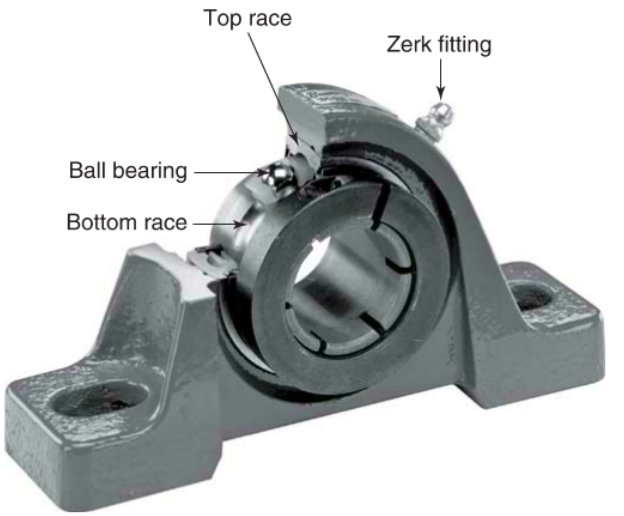

Emerson Climate Technologies

Figure 17-27. Grease fills the gaps between the ball bearing and the top and bottom races, lubricating the bearing as it moves.

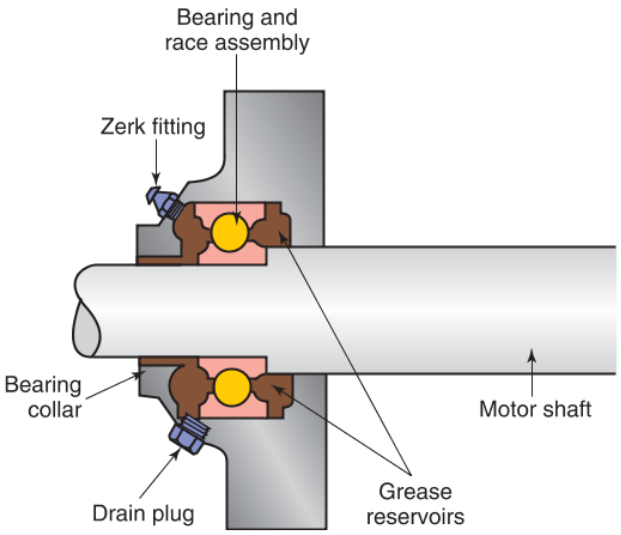

Goodheart-Willcox Publisher; DiversiTech Corporation

Figure 17-28. Some motors with ball bearings must be periodically greased using the available zerk fitting. Grease should be added until it begins to emerge from between the bearing collar and the shaft.

6

and collect dirt while in use. When a motor is reconditioned, the old lubricant must be discarded. The lubricated portions must be thoroughly cleaned, and new lubricant should be used. Use only clean grease and keep all dirt out of the bearings. Remove contaminated grease from the end of the grease gun hose by giving the grease gun a single pump and discarding the grease that comes out. Remove and clean the zerk fitting and grease drain plug. Clean any hardened grease from the fittings and the bores they fit into. Next, reinstall the zerk fitting and leave the drain plug out.

Attach the grease gun and apply grease until it begins to emerge from the drain passage or out of any other area. Use only light force on the grease gun when adding grease. If grease is applied with excessive pressure, it can overpack the bearing or be forced into the motor housing where it can contaminate the windings, causing motor damage. Most motors require that the motor be operated with the drain plug out for 10–30 minutes after being greased. After operating the motor for the required period of time, reinstall the drain plug.

Another method of lubrication is the ***oilless bushing***. In this arrangement, the motor shaft passes through a sintered (porous) bronze bushing. The bushing is saturated with oil at the factory and is considered to be permanently lubricated. The total gap between the shaft and bushing is less than 0.001″ and can be as little as 0.0003″. As this gap increases due to wear, the motor will become noisy, and the bushing should be replaced.

External motors used to drive fans can become very cold when idle. As a result, the bearing oil may become very thick. Many of these motors have low torque and will have difficulty starting when the oil thickens. They may even burn out or trip the overload protection. Be sure to use oil that will remain fluid even at the lowest temperature the bearings may reach during idle time.

17.5.2 Motor Bearings

A dry bearing can cause the motor to be noisy. However, this condition will last only a short time before the bearings will either seize (bind) or become

Copyright Goodheart-Willcox Co., Inc.

badly worn. If a bearing becomes worn, it can damage other parts of a motor, such as the motor shaft.

Bearing wear can cause a motor's endplay to become excessive. ***Endplay*** is the axial movement of a motor shaft as it rotates. Some endplay is necessary to avoid any binding when the metal of the motor shaft expands from heat. Excessive endplay causes the motor to produce a distinct knock, **Figure 17-29**.

Other indications of bearing wear include excessive vibration and excessive heat on the motor shaft. In addition to worn bearings, too much endplay can be caused by a bent shaft or small, foreign objects in the motor. If the endplay seems excessive, it can be accurately measured with a dial indicator and checked against the manufacturer's specification.

In any service to motors, the bearings should be checked to see if they are worn. Occasionally, the sleeve bearings (bushings) in a reconditioned motor are out of position. This may force the rotor out of the magnetic center along its shaft. Listen to the motor as it rotates. If the rotor is hitting the stator, the bearings are worn out and must be replaced. A heavy rumbling sound at start-up indicates that the bearings are badly worn, even though the rotor may not be touching the stator. If the motor is serviceable, replace the bearings as soon as these noises are present to prevent motor damage.

Sometimes premature bearing wear is caused by a bearing overheating. The intense heat produced by an overheated bearing can break down the lubrication in the bearing, causing excessive wear. If a bearing is overheated, determine the cause of the overheating problem and correct it before replacing the motor. Any one of the following may be the cause:

- Oil too heavy.
- Oil too thin.
- Dirt or grit in the oil.
- Belt too tight.
- Pulley hub rubbing against the bearing.
- Motor not properly aligned.

Problems with motor bearings are usually not corrected in the field. Instead, the faulty motor is removed, and a replacement motor is installed. The faulty motor can then be taken to a qualified shop or returned to the manufacturer to be properly rebuilt. However, this may not be a very economical option.

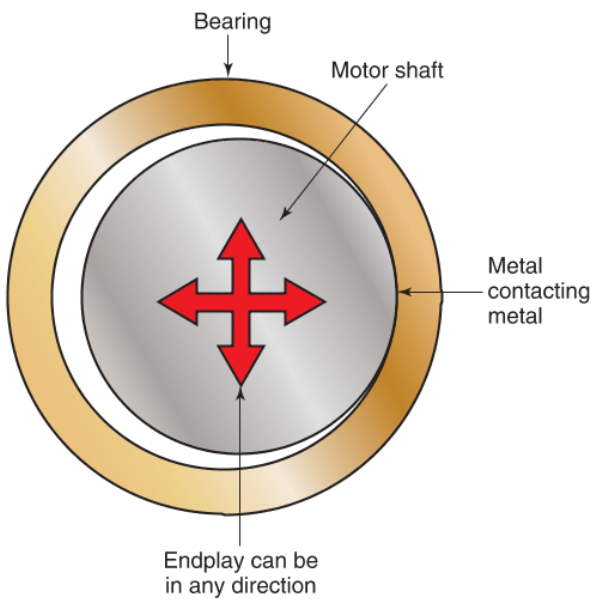

Goodheart-Willcox Publisher

Figure 17-29. If a motor's endplay is excessive, the motor shaft's axial movement will create metal-to-metal contact, producing a knocking sound.

17.5.3 Pulleys and Belts

Pulleys are used in various HVACR open-drive applications. A ***pulley*** is a grooved wheel with two flanges that is used to change rotational direction, increase or decrease rotational speed, or provide mechanical advantage. A pulley transmits motion to or from a rope, chain, or belt placed in its groove. Motor shaft pulleys are available in many sizes and types of construction. Pulley diameters vary from 3″ to 38″. Some are made of cast iron and some of steel stampings. Practically all pulleys have a keyway and a setscrew, **Figure 17-30**.

The two most popular pulley widths are A-width and B-width. A-width pulleys fit belts up to 1/2″ wide. B-width pulleys fit belts that are 1/2″ to 21/32″ wide. Multiple-groove pulleys are available for units with two or more belts, **Figure 17-31**.

Some air-conditioning units use a step pulley, which is made of multiple grooves of different diameters, for driving a fan or blower. By changing the belt from one groove to another, a technician can change the speed of the fan or blower.

Pro Tip

Multiple-Groove Pulleys

When replacing two or more belts on a unit with a multiple-groove pulley, make sure to use replacement belts that are a matched set. Belts that are marked as a matched set are exactly the same length.

Special variable-pitch pulleys are also available. These are made with half of the pulley threaded on

Copyright Goodheart-Willcox Co., Inc.

Goodheart-Willcox Publisher

Figure 17-30. The setscrew and keyway on the pulley of a belt-driven blower.

Emerson Climate Technologies

Figure 17-31. A multiple-groove pulley provides grooves for attaching two or more belts.

the hub of the other half. A setscrew locks the variable half in place after it has been properly adjusted. By turning the variable half of the pulley, a technician can narrow or widen the pulley's V-shaped groove. Widening the groove allows the belt to ride closer to the hub, reducing the speed of a belt-driven blower or fan. Narrowing the groove moves the belt farther from the hub, increasing the blower or fan speed. The speed of a belt-driven unit can be varied by as much as 30% using a variable-pitch pulley.

Caution

Variable-Pitch Pulleys

Increasing the speed of a belt-driven blower or fan by narrowing the V-shaped groove in a variable-pitched pulley also increases the motor's current draw. Decreasing the speed by widening the V-shaped groove decreases the motor's current draw.

6

V-belts are the most popular method used to turn motor, fan, and blower pulleys. These belts are made of layers of rubber, fabric, and cord. Some belts are a mixture of natural and synthetic rubber. Belts are made in many sizes, from 15″ to 660″ in length. Belt size is determined by the measure of its ***outside length***, which is the distance around the outside of the belt. This length can be measured using a steel tape or cloth tape. The width of a belt's cross section is measured at its widest point, **Figure 17-32**.

Most belts fall into one of the following four standard widths:

- Classical.
- Narrow.
- Notched.
- Light-duty.

When installing belts, be careful to adjust them for proper tension and alignment. They should be snug but not tight. The correct belt tension is the lowest tension at which a belt will not slip when it is under full-load conditions. Tightening a belt beyond the correct tension increases the motor's load and puts unnecessary stress on the bearings. Trying to gauge a belt's tension by feel alone with one's hands is not recommended. A commercial tension gauge provides an accurate measurement of belt tension, **Figure 17-33**.

When belts are used to connect a motor to a compressor, fan, or blower, the pulley on the belt-driven unit and the motor pulley must be in-line with each other in two different ways. First, the centerline of the shaft on the belt-driven unit must be parallel with the centerline of the electric motor shaft. Second, the pulley grooves must be in-line with each other. Such alignment will give long life to the belt and to the electric motor.

Copyright Goodheart-Willcox Co., Inc.

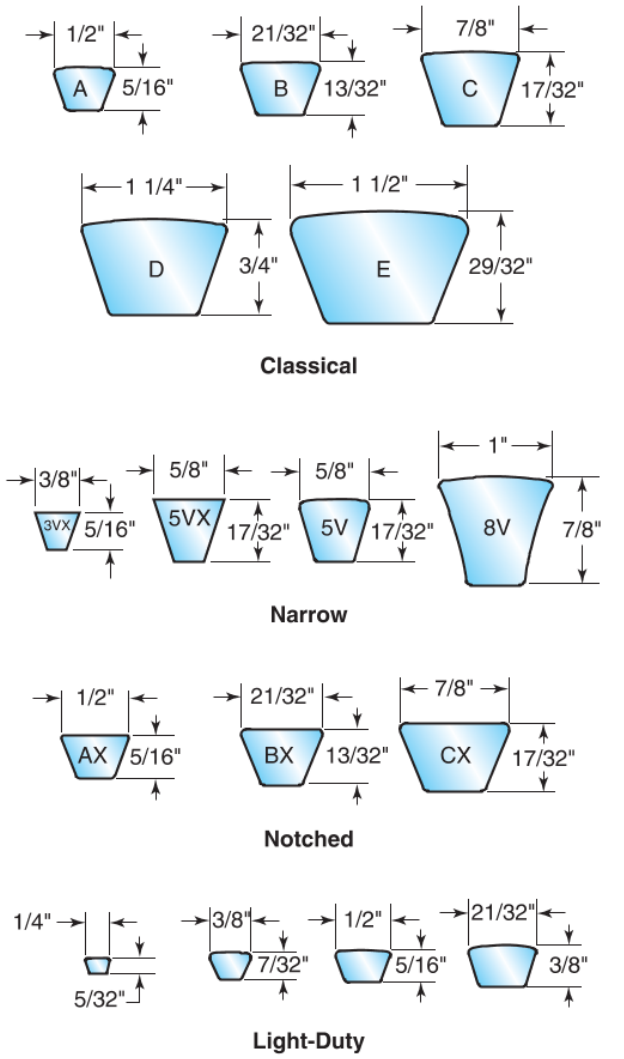

Gates Corporation

Figure 17-32. The standard designations and dimensions for cross sections of various industrial belts.

A

B

Gates Corporation

Figure 17-33. Belt tension should be checked by hand and with a commercial tension gauge. A—Technician checking belt tension by hand while the belt is not moving. B—A commercial tension gauge indicates the distance that the belt deflects when force is applied to it.

A poorly aligned belt will shorten the life of the motor by causing it to continuously operate under an excessive load. A noisy, poorly operating motor may be the result. **Figure 17-34** shows a tool that can be used to adjust and align belt drives.

17.6 Servicing Motor Control Systems

Perceived motor failure or erratic performance may be caused by problems in the motor control system. The following sections provide some basic guidance for servicing control systems. More detailed information about servicing specific control systems is presented in the service chapters later in the book.

17.6.1 Troubleshooting and Servicing Controls

Pressure and temperature controls must be correctly installed. If not done correctly, an HVACR system will not operate properly. The electrical connections must be clean and tight. The wire terminals connecting the wiring to control must be large enough

Copyright Goodheart-Willcox Co., Inc.

Photo courtesy of Ludeca, Inc.

Figure 17-34. Laser tool used for fast and accurate alignment of V-belt pulleys, as it detects and corrects angle, offset, and twist misalignment between pulleys.

to carry the wiring's current. Some wire terminals are connected to posts that have either screws or threaded studs with a nut and washer, **Figure 17-35**.

If remotely mounted, the control's sensing element must be secured very carefully. It should be attached tightly to the evaporator or tubing. The sensing element and the place where it is clamped should be cleaned with clean steel wool before assembly. The best place for attaching a control's sensing element is on the last one-third of the evaporator.

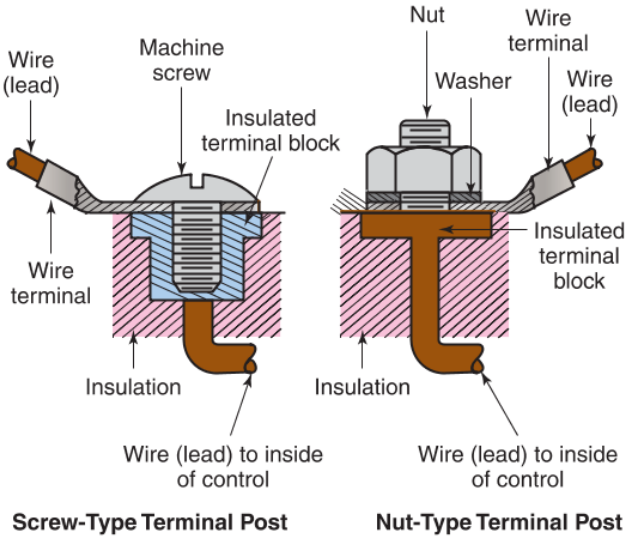

Goodheart-Willcox Publisher

Figure 17-35. Two types of electrical terminal posts used to connect wiring to a control.

Pressure and Temperature Controls in Refrigerators, Coolers, and Freezers

Several kinds of trouble may be encountered in different controls, including contact corrosion, overload, loss of charge (in bellows or diaphragm), and improper sensing element installation.

Corrosion may occur on the contact points of controls, causing a poor electrical connection. Once contact points become worn and cause trouble, it is best to replace them. Sometimes this means the entire control should be replaced. Corroded or pitted points can be detected by using an ohmmeter to check for resistance. In an emergency, the points can be cleaned with a small, clean file. A single-cut file or mill file works best, but even a clean nail file may do a temporary job. However, any attempt to repair contact points is only temporary, making a callback inevitable.

Sometimes a diaphragm or bellows may lose its charge. This can be detected by a simple pressure check. If the charge is lost, the bellows are very easily compressed. If a bellows is charged, the pressure inside is around 75 psig (517 kPa) or more, which means applying finger pressure will not affect it. In the event of leakage, replace this part of the control or the entire control unit.

Control troubles also occur when the sensing element is not attached tightly to the evaporator. This means that a greater change in temperature is required before the motor will cut in and cut out. The sensing element must be firmly clamped to the evaporator to achieve good thermal contact between the two. Many evaporators have metal sockets into which the sensing element is inserted. Make sure to clean the contact surfaces before assembly.

Pressure and Temperature Controls for Heating and Comfort Cooling Systems

If a heating or cooling system is not working, the controls may be at fault. Oftentimes, a malfunctioning thermostat provides warning signals or trouble codes to the system controller. Diagnostic or troubleshooting charts are available for different models of thermostats, so a technician can identify and troubleshoot the code, **Figure 17-36**.

If a thermostat does not provide trouble codes, a good first step is to check all electrical connections. Make sure that all switches are operating. Then, verify continuity between the thermostat and the furnace or cooling system.

If no problems are found and the heating or cooling system itself has no apparent problems, the temperature-sensing device within the thermostat is probably at fault. Checking the device externally can be difficult. Instead, it is best to verify a faulty temperature-sensing

Copyright Goodheart-Willcox Co., Inc.

Thermostat Troubleshooting Guide and Voltage References		
Problem Observed	**Possible Cause**	**Corrective Action**
No display.	1. No ac voltage to subbase.	1. Measure power at TB-1 pins 1 and 2. Should be 22 V to 30 V.
	2. No power to unit.	2. Check for power output. Check P-3 hook-up for 22 V to 30 V. Check power hook-up. Check for defective wiring.
	3. Blown fuse (F-8).	3. Replace fuse with 1.0 A.
	4. HVACR transformer defective.	4. Replace transformer with correct type.
	5. J-1 not connected to subbase.	5. Connect J-1.
	6. Damaged pins on J-1 connector.	6. Straighten pins if possible, or replace broken controller.
	7. Subbase defect.	7. Replace subbase.
	8. Controller defect.	8. Replace controller.
No temperature display or wrong temperature displayed.	1. Unit not calibrated.	1. Calibrate per Section XIII.
	2. Temperature sensor is open.	2. Replace temperature sensor board.
	3. Temperature sensor cable damaged or not connected.	3. Check temperature sensor cable for damage or check for correct connection. If damaged, replace controller.
	4. Temp cal was used.	4. Press RESET for 10 seconds.
Display on, but none of the function keys work.	1. Controller defect.	1. Remove and replace controller.

DuPont Energy Management Co., Inc.

Figure 17-36. Excerpt from a troubleshooting chart showing some fairly typical problems with thermostats and procedures for correcting those problems.

device by using another thermostat temporarily set in place. If the alternate thermostat corrects the problem, the original thermostat is faulty. Replacing the original thermostat is the easiest and most economical means of correcting a malfunctioning temperature-sensing device.

Electronic thermostats are somewhat easier to service. They typically provide some simple self-diagnostics. These diagnostics can inform the technician about such things as battery condition or a problem with the programmed settings, **Figure 17-37**.

A service technician should consult the manufacturer's manual for a table of thermostat diagnostic codes. For the most part, thermostats are rarely serviced because it is cheaper to simply replace a suspect thermostat.

Pro Tip

Common Causes of Short Cycling

When a refrigeration system is ***short cycling***, it means that it starts and stops too frequently, running for a shorter time than it should. A system will short cycle if the thermostat is not mounted securely and is exposed to vibration, which can be caused by foot traffic or machinery. Be sure to mount the thermostat to something solid.

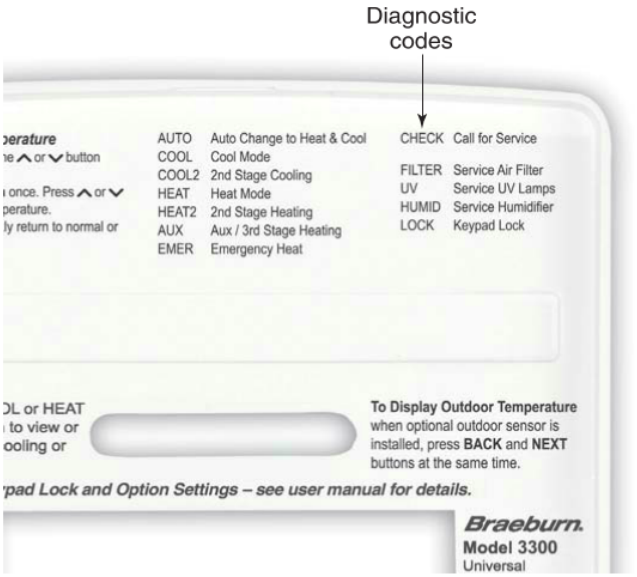

Braeburn Systems LLC

Figure 17-37. Cover for an electronic thermostat listing the meanings of some of the diagnostic codes that may appear on the thermostat's digital display.

Copyright Goodheart-Willcox Co., Inc.

17.6.2 Troubleshooting and Servicing Relays

In general, relays should be replaced, not repaired. A service technician's job is mainly to determine if a relay is defective. The wire size, contact point area, spring tension or weight, and air gaps are specifically designed and set for certain relays. For example, a slight difference in weight or spring tension between an old relay and a replacement might result in the motor running 100 RPM slower. Replace all relays with exact duplicates or use a relay replacement chart or guide.

Loose connections on the starting relay are another common cause of short cycling. The most effective way to determine if a relay is the cause of trouble is to first check the other parts of the circuit, as it is difficult to see if a relay is energized when it is connected to the compressor. Potential relays that operate on counter emf from the motor require that the motor, the capacitor, the overload cutout, and the thermostat operate correctly. If these parts test correctly, then the next logical faulty component is the relay.

A weight-operated current relay must be mounted straight and level. Otherwise, the plunger will rub and stick against the sides of the relay body. After power is applied to the motor circuit, the relay should quickly close and then open again in about three seconds if it is working properly.

When replacing a relay, start by disconnecting the power supply. Use the correct size screwdriver. Label each wire as it is disconnected to indicate the relay terminal it connects to. Relay terminals are usually numbered, so a tag or clip on each wire with the corresponding number makes it easier to connect the new relay. Masking tape and a marking pencil are useful for such labeling.

If an exact replacement potential relay is not available, use one of a lower voltage rating (90% of original rating). A relay with a higher voltage rating should not be used, as the compressor will not generate enough counter emf to open the relay at the correct start winding speed.

Always keep a relay's cover in place. This prevents dust from collecting on the contact points, which can cause the contacts to burn. If the contact points burn, it results in excessive voltage drop across the points and a control that works poorly. Contact points may also be burned or fused by the discharge of a capacitor if a unit is short cycling. To eliminate this trouble, use capacitors equipped with bleed resistors across the capacitor terminals. Avoid tapping a relay to check it. Such tapping may cause the points to touch. This brief contact may ruin the points and damage the motor. The relay must function correctly without being tapped, or it should be replaced.

Copyright Goodheart-Willcox Co., Inc.

Chapter Review

Summary

- Voltmeters, ohmmeters, and ammeters are used to measure voltage, resistance, and current in a circuit, respectively. Voltmeters and ohmmeters should be connected in parallel with a load or circuit being measured. In-line ammeters must be connected in series with a circuit, while clamp-on ammeters measure by hooking their jaws around a single conductor in the circuit.
- A multimeter is a single instrument that can measure multiple electrical variables, including voltage, current, and resistance. Many multimeters can also check diode operation, circuit continuity, capacitance, and temperature.
- A power factor meter provides a direct reading of the power factor in an electrical circuit. A wattmeter is used to measure the wattage consumed by an electrical load. Like an ammeter, a wattmeter is connected in series with the circuit or load being measured.
- A megohmmeter is an electrical insulation tester used to detect current leaks and conductor insulation failures. In HVACR, megohmmeters are mainly used to test motor winding insulation. In a hermetic compressor, the resistance of the winding insulation indicates the level of moisture and contaminants in the compressor.
- Wattmeters are especially useful for checking the condition of a motor's start winding and starting relay, whereas ammeters are useful for checking a motor's locked rotor amperage and full-load amperage. When replacing a motor, refer to the motor nameplate for the required motor specifications.
- Start and run capacitors are common failure points in a motor circuit. When replacing a capacitor, be certain to use an exact replacement with the same voltage and capacitance values. Discharge any motor capacitor in a circuit before handling it.
- Excessive heat in a motor resulting from high current draw can deteriorate winding insulation and create shorted or grounded windings. Technicians can use a thermometer to measure a motor's ambient temperature and an infrared thermometer to measure and then estimate its internal temperature.
- Single phasing is the loss of one or more phases in a three-phase motor. This can be prevented using a phase loss monitor. Using a voltmeter and ohmmeter, a technician can test a three-phase motor's power supply and winding resistance to determine if the motor is faulty.
- HVACR technicians use ohmmeters and megohmmeters to test the windings in hermetic compressor motors for continuity, short circuits, and shorts to ground. If a single-phase hermetic compressor will not start and electrical tests indicate it is in good condition, a technician can connect a hard start kit to the compressor to provide additional starting torque.
- Common problems in fan motors include bad connections, dry or worn bearings, burnt winding insulation, and a loose or out-of-balance fan. Technicians should listen for rattling or other irregular noises when troubleshooting fans.
- Troubleshooting electronically controlled motors (ECMs) typically involves checking the power supply, inspecting the wiring harness and connections, and following the manufacturer's troubleshooting chart.
- Electrical problems in external motors are typically due to short circuits, open circuits, and shorts to ground in the motor windings. If an external motor hums but does not start, it is a sign that the start capacitor, centrifugal switch, or motor starting relay has failed.
- Mechanical problems in external motors, such as excessive endplay, are often caused by worn bearings. Some motors have sealed bearings that do not require any service. Those that do require service have a zerk fitting into which a technician can inject grease with a grease gun. The life of bearings depends on keeping the bearings, grease, and fittings as clean as possible.
- Pulleys may be used to transmit motion from an external motor shaft to a compressor, fan, or blower. V-belts are the most popular method used to turn a pulley. V-belts must be carefully adjusted for proper tension, and the two pulley grooves must be properly aligned with each other.
- Thermostats and other temperature and pressure controls require a secure mounting on a steady surface, clean and tight electrical connections, and a properly positioned sensing element. Otherwise, they may cause a motor to short cycle. Corrosion of the thermostat's contact points is also a common problem.

Copyright Goodheart-Willcox Co., Inc.

- Defective relays should be replaced with exact duplicates. When replacing a relay, remember to disconnect power to the relay and label each wire to indicate the relay terminal to which it connects.

Review Questions

Answer the following questions using the information in this chapter.

1. A voltage drop only exists if there is a _____ between two points in a circuit.
   A. switch
   B. resistance
   C. voltmeter
   D. current
2. To measure voltage polarity correctly in a dc circuit, a technician should place the voltmeter's red lead on the side of the load closest to the _____ side of the power supply.
   A. series
   B. parallel
   C. negative
   D. positive
3. Which of the following electrical instruments can be used to check for short circuits, open circuits, and shorts to ground?
   A. Power factor meter
   B. Wattmeter
   C. Ammeter
   D. Ohmmeter
4. Which of the following electrical instruments can only take an accurate reading when a circuit's power is turned off?
   A. Power factor meter
   B. Wattmeter
   C. Ammeter
   D. Ohmmeter
5. Which of the following electrical instruments must be connected in series to take an accurate reading?
   A. Clamp-on ammeter
   B. Ohmmeter
   C. In-line ammeter
   D. Voltmeter
6. Which of the following electrical instruments wraps around the conductor it is measuring?
   A. Clamp-on ammeter
   B. Ohmmeter
   C. In-line ammeter
   D. Voltmeter
7. The _____ function on a multimeter allows a technician to test devices that conduct current in only one direction.
   A. capacitance
   B. frequency
   C. continuity
   D. diode check
8. Which multimeter function allows a technician to test for an unbroken path between two points in a circuit?
   A. Capacitance
   B. Inductance
   C. Continuity
   D. Diode check
9. Which instrument shows the relationship between a circuit's true power and apparent power?
   A. Power factor meter
   B. Wattmeter
   C. Voltmeter
   D. Ohmmeter
10. Which instrument measures only the true power consumed by an electrical load?
    A. Power factor meter
    B. Wattmeter
    C. Voltmeter
    D. Ohmmeter
11. Megohmmeters are used to test _____.
    A. electrical insulation
    C. full load amperage draw
    B. relay operation
    D. V-belt alignment
12. A megohm reading of _____ or higher indicates an excellent condition.
    A. 100 Ω
    B. 10,000 Ω
    C. 10 MΩ
    D. 100 MΩ
13. If a refrigeration unit is undersized for its application, the compressor motor will most likely fail because it is running _____.
    A. continuously
    B. sporadically
    C. only with a hard start
    D. only when reversed

Copyright Goodheart-Willcox Co., Inc.

14. Before testing a capacitor or measuring its capacitance, a technician must discharge the capacitor using a high value _____.
    A. hard start kit
    B. zerk fitting
    C. resistor
    D. bushing
15. The temperature of the hottest part inside a motor should *not* be more than _____ above the ambient temperature.
    A. 6°F
    B. 20°F
    C. 44°F
    D. 72°F
16. To approximate a motor's internal temperature, a technician can add _____ to the temperature of the motor frame as measured by an infrared thermometer.
    A. 20°F
    B. 44°F
    C. 72°F
    D. 150°F
17. All three sets of windings in a three-phase motor must have the same _____.
    A. voltage phase
    B. motor terminal
    C. bleed resistor
    D. resistance
18. A hermetic compressor motor has a short in one of its windings if any of the resistance measurements are near _____.
    A. OL or ∞ (infinity)
    B. 0 Ω
    C. 150 Ω
    D. 100 MΩ
19. A hermetic compressor motor has an open winding if any of the resistance measurements are _____.
    A. OL or ∞ (infinity)
    B. 0 Ω
    C. 150 Ω
    D. 100 MΩ
20. Loose electrical connections create excessive resistance and can cause a fan motor to _____.
    A. lose speed
    B. hum loudly
    C. overheat
    D. All of the above.
21. To make sure an electronically commutated motor (ECM) is communicating with the HVACR system, a technician should check the _____.
    A. 120 V power circuit
    B. fan blades
    C. control circuit
    D. pressure values
22. If a single-phase external motor is humming but will not start, the first step is to check the _____.
    A. electrical disconnect
    B. fuse or circuit breaker
    C. phase loss monitor
    D. start capacitor
23. A cylindrical sleeve bearing, typically made of bronze, is called a _____.
    A. bushing
    B. slip ring
    C. wick
    D. pulley
24. Which type of lubrication method is considered permanently lubricated?
    A. Wick lubricating system
    B. Slip ring lubricating system
    C. Oilless bushing
    D. Ball bearings
25. Indications that a motor has excessive endplay include all of the following *except* _____.
    A. a distinct knocking sound
    B. excessive vibration
    C. excessive heat on the motor shaft
    D. a high pitched squeal
26. A grooved wheel with two flanges used to change rotational direction or provide mechanical advantage is a _____.
    A. bushing
    B. bearing
    C. zerk fitting
    D. pulley
27. By widening the groove of a variable-pitched pulley, a technician _____ the speed of a belt-driven blower or fan.
    A. increases
    B. reduces
    C. doubles
    D. multiplies

Copyright Goodheart-Willcox Co., Inc.

28. The centerline of the shaft on a belt-driven fan or compressor must be perfectly _____ with the centerline of the motor shaft.
    A. askew
    B. parallel
    B. perpendicular
    D. None of the above.
29. A technician should repair a control unit with corroded contacts by _____ the contacts.
    A. filing
    B. cleaning
    C. replacing
    D. closing
30. When a control unit's diaphragm or bellows compresses easily, it indicates that the _____.
    A. element has lost its charge
    B. pressure switch shorted out
    C. pressure switch has corroded
    D. unit is in calibration

Copyright Goodheart-Willcox Co., Inc.

CHAPTER 18 Compressors

Chapter Outline

18.1 Compressor Drive Configurations
- 18.1.1 Open-Drive Compressors
- 18.1.2 Hermetic Compressors

18.2 Types of Compressors
- 18.2.1 Reciprocating Compressors
- 18.2.2 Rotary Compressors
- 18.2.3 Scroll Compressors
- 18.2.4 Screw Compressors
- 18.2.5 Centrifugal Compressors

18.3 General Compressor Components and Systems
- 18.3.1 Service Valves
- 18.3.2 Mufflers
- 18.3.3 Compressor Cooling Systems
- 18.3.4 Lubrication Systems
- 18.3.5 Unloaders
- 18.3.6 Sealing Devices
- 18.3.7 Crankcase Heaters

Learning Objectives

Information in this chapter will enable you to:

- Summarize the design differences between open-drive compressors, fully hermetic compressors, and semi-hermetic compressors.
- Identify the components of a reciprocating piston compressor and summarize their functions.
- Understand how a Scotch yoke type of reciprocating compressor works.
- Explain how a rotary compressor works.
- Summarize the differences between rotating vane and stationary blade rotary compressors.
- Understand how a scroll compressor works.
- Explain how a screw compressor works.
- Identify the components of a centrifugal compressor and summarize their functions.
- Identify and explain the purpose of compressor cooling and lubrication systems, mufflers, and crankcase heaters.

Technical Terms

belt-driven compressor
booster compressor
centrifugal compressor
centrifugal force
clearance space
compression ring
connecting rod
crankcase
crankcase heater
crankshaft
cylinder head
direct-drive compressor
eccentric
hermetic compressor
impeller
muffler
oil ring
oil slugging
open-drive compressor
O-ring
piston
piston pin
piston ring
pressure lubrication system
reciprocating compressor
rotary compressor
Scotch yoke
screw compressor
scroll compressor
semi-hermetic compressor
shaft seal
splash system
stator
unloader
valve plate
volute

Review of Key Concepts

Reviewing these concepts from earlier chapters will help you understand new concepts presented in this chapter:

- A gas is a physical substance with no definite shape or volume, which expands to fill its container. (Chapter 5)
- As a gas is compressed, its pressure and temperature rise. This is due to the energy added to the gas by compression. The energy added is often termed the heat of compression. (Chapter 5)
- The combined gas law states that the ratio between a gas's pressure, volume, and temperature remains constant. (Chapter 5)
- A compressor draws in low-pressure vapor from the low side of the system, compresses it, and discharges high-pressure vapor into the high side of the system. (Chapter 6)

Introduction

The compressor is the "heart" of a refrigeration system. It compresses low-temperature and low-pressure refrigerant vapor into a much smaller volume. As the refrigerant is compressed into a smaller volume, its temperature and pressure increase. The pressure is increased from a low-pressure level (suction) at the compressor's inlet to a high-pressure level (discharge) at the compressor's outlet. Cool refrigerant enters the compressor through the suction valve. The refrigerant contains the heat that was absorbed when the refrigerant vaporized in the evaporator. The compressor pumps this vapor to the condenser, where the heat is released from the refrigerant as it condenses and subcools.

Video

- Types of Compressors

18.1 Compressor Drive Configurations

Compressors are driven by an electric motor, which may be mounted outside the compressor unit or inside its housing. Compressors that are driven by an external motor are called open-drive compressors and compressors that include an integrated drive motor in a sealed unit are called hermetic compressors. Open-drive compressors are primarily used in large commercial and industrial refrigeration applications.

18.1.1 Open-Drive Compressors

An ***open-drive compressor***, or *external-drive compressor*, is driven by a mechanical power source that is separate from the compressor unit. Most often this is an electric motor. They are composed of all the casing and all the mechanical parts necessary to pump a low-pressure vapor into a high-pressure vapor, **Figure 18-1**.

A major concern with all open-drive compressor systems is keeping the refrigerant sealed within the system. Since an open-drive compressor requires one of its moving parts (the compressor shaft) to go from inside the compressor to the outside of the compressor, there is the possibility of developing a leak. To prevent refrigerant leaks, a shaft seal is required where the shaft comes through the compressor case. Refrigerant vapor cannot be allowed to flow out of the case and air cannot be allowed to flow in. Either would quickly ruin the compression operation.

A ***shaft seal*** creates a leakproof seal between the shaft and the case where it emerges. The seal must be able to withstand the varying pressures inside the case and allow the shaft to rotate without excessive drag. The motor and the compressor drive are at atmospheric pressure. The pressure inside the compressor case will vary depending on the refrigerant used and the temperature. Sometimes it may be considerably above atmospheric pressure; at other times, it may be below atmospheric pressure. The shaft seal must be designed to prevent leakage under the full range of pressures the compressor produces, **Figure 18-2**.

All shaft seals used in compressors have two elements. Usually, one element turns with the shaft. The other element is stationary and is mounted to the compressor case with leakproof gaskets. Spring pressure pushes the rotating element into contact with the stationary element, forming the seal. The rubbing surfaces are made of either hardened steel and bronze, or ceramics and carbon. The two rubbing surfaces must be lubricated or they will wear excessively and start to leak. Unbalanced loading of the compressor shaft due to improper belt tension or drive shaft misalignment will also increase wear of the shaft seal. For this reason, the shaft seal is a common failure point in open-drive compressors.

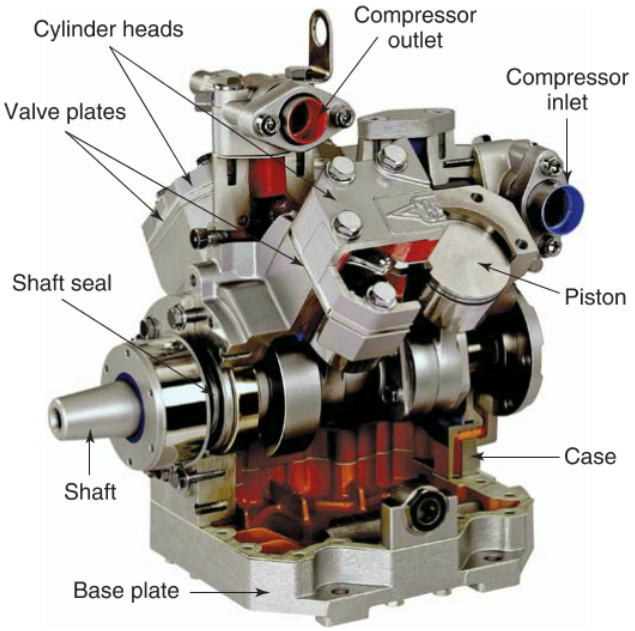

Bitzer

Figure 18-1. A four-cylinder, open-drive, V-type compressor. The shaft seal prevents oil and refrigerant from leaking out of the compressor case.

CMP Corporation

Figure 18-2. A shaft seal assembly with gasket.

Direct-Drive Compressor

There are two different ways of joining a motor to an open-drive compressor: direct-drive and belt-driven.

Copyright Goodheart-Willcox Co., Inc.

A ***direct-drive compressor*** is driven by a coupling connecting the shaft of an electric motor or an engine directly to the compressor shaft. Since the coupling attaches compressor shaft directly to motor shaft, the compressor turns at the same speed as the motor, **Figure 18-3**.

Belt-Driven Compressors

On a ***belt-driven compressor***, a belt connects a pulley on the drive motor to a pulley on the compressor's shaft. A V-belt is generally used because it provides a quiet, efficient drive. In large-capacity installations, more than one belt may be used. This is necessary in order to transmit the required horsepower, **Figure 18-4**.

The speed of a belt-driven compressor is determined by the size of the compressor pulley in relation to the size of the drive motor pulley. If the compressor pulley is larger than the motor pulley, the compressor turns slower than the drive motor. If the compressor pulley is smaller than the pulley on the drive motor, the compressor turns faster than the motor. On most compressors, the compressor pulley is larger than the motor pulley, which causes the compressor to turn more slowly than the motor, **Figure 18-5**.

Determining Compressor Speed

The following steps can be used to determine a compressor's revolutions per minute (RPM) based on the RPM of the drive motor and sizes of the motor and compressor pulleys.

1. Determine the RPM of the drive motor: _____.
2. Determine the diameter of the motor pulley: _____.
3. Determine the diameter of the compressor pulley: _____.
4. Divide the diameter of the compressor pulley by the diameter of the motor pulley: _____ ÷ _____ = _____.
5. Divide the RPM of the motor by the value determined in Step 4: _____ ÷ _____ = _____ RPM. This is the compressor speed in RPM.

Most V-belt pulleys are made of cast iron, though some are built up from stamped steel parts. The pulleys must be in perfect alignment, and proper tension must be provided on the belt. Also, the motor and compressor shafts must be exactly parallel to each other.

Engine-Driven Compressors

Although electric motors are most commonly used to drive refrigeration compressors, compressors can also be driven by internal combustion engines. Natural gas, gasoline, propane, and other engines may be used to drive refrigeration compressors. Such units are available in 4-ton to 75-ton capacities. Engine-driven compressors of 1-ton to 5-ton capacity are available for use on truck units and air conditioning.

A pressure control is usually connected to the engine's throttle. The sensing device is placed in the low-side suction line. The pressure control's linkage opens the engine's throttle as the suction pressure increases, which speeds up the engine. This, in turn, increases the compressor speed and the rate of refrigeration. As

Bitzer

Figure 18-3. A motor and direct-drive compressor installation.

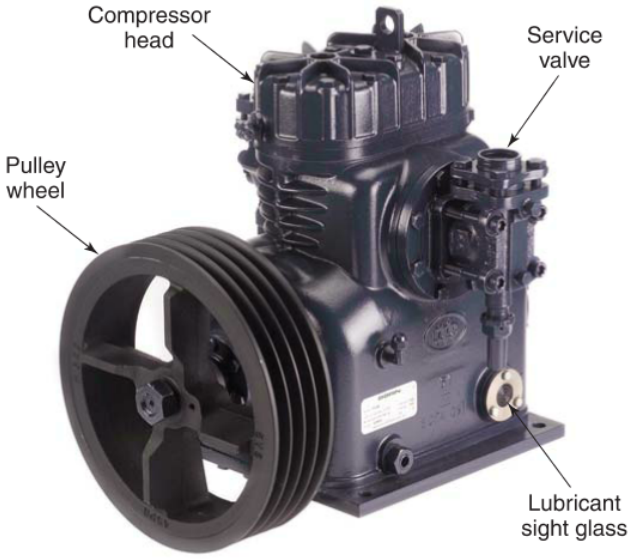

Bitzer

Figure 18-4. An open-drive compressor and its drive motor.

Copyright Goodheart-Willcox Co., Inc.

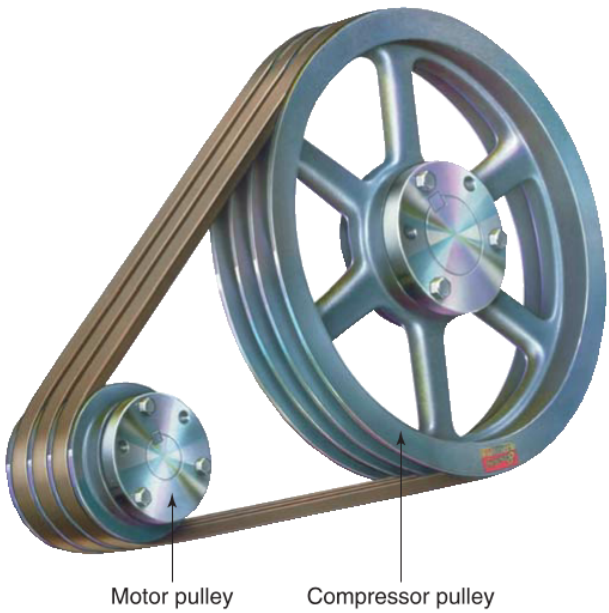

Emerson Climate Technologies

Figure 18-5. Multiple belt drive arrangement that might be used to drive a high-capacity compressor.

the temperature in the evaporator (and pressure in the suction line) drops, the engine slows. Equilibrium is established between the engine's speed and low-side pressure, which maintains the desired temperature in the refrigerated space.

18.1.2 Hermetic Compressors

In a ***hermetic compressor,*** the motor is sealed inside the same dome or housing as the compressor, so a shaft seal is not needed. The motor is directly connected to the compressor, often through a shared shaft. Several companies now produce hermetic compressors of over 20 horsepower. Some are enclosed in a bolted assembly. These types of compressors are often called semi-hermetic, field-serviceable, or accessible. Fully hermetic compressors are sealed in a welded casing. Both semi-hermetic and fully hermetic compressors may be equipped with service valves. These types of compressors may be connected to different types of evaporator and used for many different applications.

Fully Hermetic Compressors

Fully welded hermetic compressors cannot be serviced without cutting open the shell. This is a specialized skill, so these compressors cannot be serviced in the field and are considered "throw-away" compressors. These units are built in sizes from 1/6 hp up to 20 hp. Internal design varies with size and manufacturer.

Construction

In a fully hermetic compressor, the motor and compressor shaft are in a vertical position. Some hermetic units are made with the motor at the top. Others have the motor at the bottom and the compressor at the top, **Figure 18-6**.

Smaller units usually have one cylinder. Larger units (1/2 hp and up) have two or more cylinders. The motors used in small units are typically single-phase. Three-phase motors are generally used in larger units. The compressor and motor of a hermetic unit are usually spring-mounted inside the hermetic dome, although some units use external mounting springs. The spring mounting prevents most of the compressor vibration from being felt outside of the dome.

In hermetic compressors, the motor's rotor is mounted directly on the compressor shaft. In hermetic reciprocating compressors, the rotor often has a built-in counterweight, which balances the weight of the crank, connecting rod, and piston. Hermetic motors are lubricated by the oil carried in the refrigerant. They do not use brushes or open points inside the dome. Arcing would cause pollution in both the oil and the refrigerant, which would lead to an electrical burnout. The electrical connections and starting relay are located outside the dome.

The discharge (exhaust) and suction lines inside the dome are flexible. Service connectors are provided

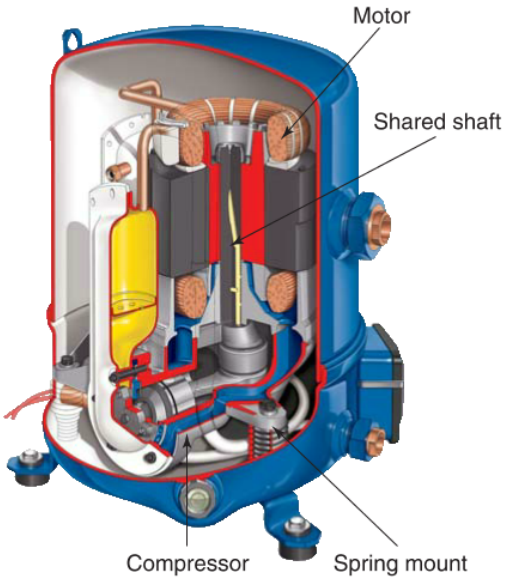

Danfoss-Maneurop Ltd.

Figure 18-6. This hermetic reciprocating compressor is a universal compressor for both commercial refrigeration and air conditioning applications. Note the vertical arrangement of the motor and compressor, which are connected by a shared shaft.

Copyright Goodheart-Willcox Co., Inc.

on the dome for connecting the exterior lines to the lines inside the dome. Electrical connections to the motor pass through the dome by means of an insulated leakproof seal.

A hermetic compressor is lubricated by oil in the refrigerant that flows through the unit. The refrigerant vapor enters the dome through a suction connector, cooling the motor and picking up some oil (less than 1%) before it is pulled into the suction chamber for compression. The oil that is carried by the refrigerant helps to lubricate and seal the valves and other elements in the vapor's path.

Semi-Hermetic Compressors

A ***semi-hermetic compressor*** combines a motor and a compressor inside a multipart shell that is bolted together. The shell can be unbolted to open the unit for repair. For this reason, they are sometimes called *serviceable hermetic compressors*. Gaskets are used between the bolted sections to seal the unit and prevent leaks. Semi-hermetic compressors are often air-cooled and have cooling fins on the exterior housing to increase surface area and improve heat dissipation. The motor and compressor are usually arranged horizontally. See **Figure 18-7**.

Safety Note

Avoiding Burns

Avoid touching the compressor discharge line. During and after operation, it is very hot and may cause burns.

18.2 Types of Compressors

In addition to the open-drive and hermetic classifications already presented, compressors can be further classified based on their method of compression. There are five basic types of compressors in use in the refrigeration and air conditioning industry:

- Reciprocating (piston-cylinder).
- Rotary.
- Scroll.
- Screw.
- Centrifugal.

Reciprocating compressors are most often used in small- and medium-sized commercial refrigeration systems. They are also popular in residential and light commercial air conditioning applications, as are scroll and rotary compressors. Screw compressors are used primarily in large commercial and industrial systems. Centrifugal compressor use is frequently for the cooling of large buildings.

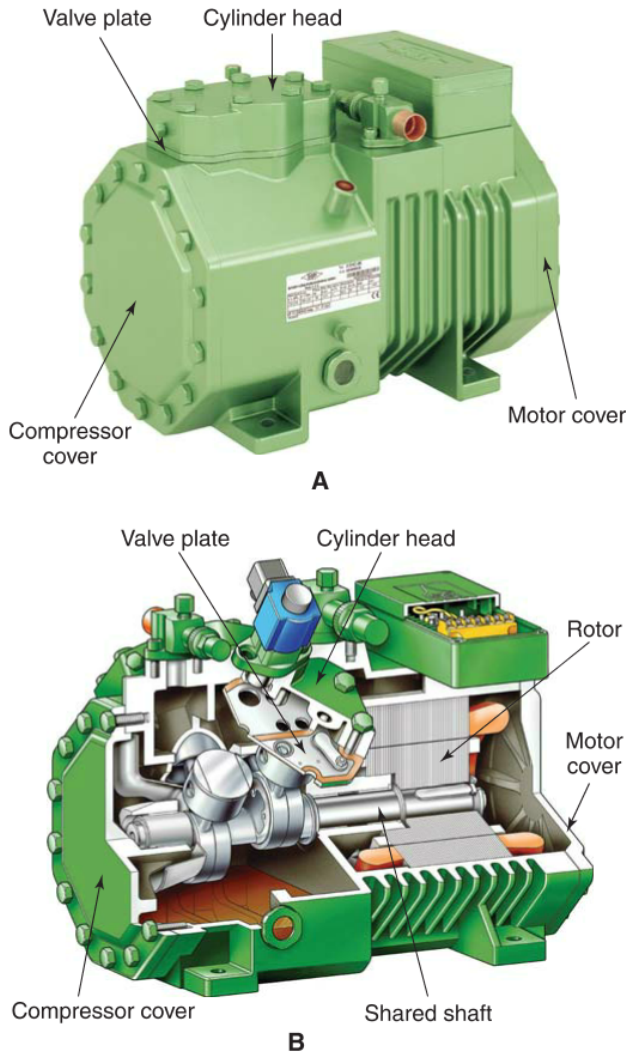

Bitzer

Figure 18-7. Semi-hermetic reciprocating compressors. A—The cylinder head, compressor cover, and motor cover can be unbolted to service the compressor. B—This cutaway shows the arrangement of parts inside a semi-hermetic reciprocating compressor.

The type of compressor used for a given application depends on the physical size of the unit, cooling capacity required, cost, serviceability, and noise requirements. **Figure 18-8** compares the wide range of compressors available for many different refrigeration applications.

The size of a compressor intended for residential or domestic use must be small because of the limited space available for most applications. It must be quiet and not require servicing for many years. Small hermetic reciprocating or scroll compressors best meet these requirements and are typically preferred for residential or domestic applications.

Copyright Goodheart-Willcox Co., Inc.

Refrigeration and Air Conditioning Compressor Applications			
Compressor Type	**Capacity Range HP (W)**	**Capacity Range Tons (W)**	**Application**
Centrifugal	33–12,000 hp (24.6 kW–8,942 kW)	6.96–2,544 Ton (24.6 kW–8,942 kW)	Commercial air conditioning
Reciprocating (open-drive)	0.17–200 hp (126 W–149 kW)	0.03–42 Ton (126 W–149 kW)	Commercial air conditioning Commercial refrigeration Industrial refrigeration
Reciprocating (semi-hermetic)	0.5–150 hp (373 W–111.9 kW)	0.10–31.8 Ton (373 W–111.9 kW)	Commercial air conditioning Commercial refrigeration
Reciprocating (fully hermetic)	0.17–25 hp (126 W–18.6 kW)	0.04–5.3 Ton (126 W–18.6 kW)	Domestic refrigeration Residential air conditioning Commercial air conditioning Commercial refrigeration
Rotary	3–50 hp (2.2 kW–37.3 kW)	0.64–10.6 Ton (2.2 kW–37.3 kW)	Domestic refrigeration
Screw	3–5,000 hp (2.2 kW–3,730 kW)	0.64–1,000 Ton (2.2 kW–3,730 kW)	Commercial air conditioning Commercial refrigeration Industrial refrigeration
Scroll	3–2,000 hp (2.2 kW–1,492 kW)	0.64–424 Ton (2.2 kW–1,492 kW)	Residential air conditioning Commercial air conditioning Commercial refrigeration

Goodheart-Willcox Publisher

Figure 18-8. Table showing typical compressor applications and capacities. Be aware that the capacities and applications will vary somewhat, depending on the manufacturer's design.

Large building air conditioning has very different requirements for a compressor. Serviceability is a primary concern, so easy access to the compressor must be provided. Such systems often have a designated mechanical room, so limited space is seldom a concern. In large building air-conditioning systems, compressor size is primarily determined by the amount of cooling capacity required.

18.2.1 Reciprocating Compressors

The majority of residential, commercial, and industrial HVACR systems use reciprocating compressors. A ***reciprocating compressor*** is a compressor that functions by changing the rotational movement of a crankshaft into the reciprocating motion of the pistons within cylinders. These compressors are classified in a number of ways:

- By cylinder arrangement.
- By number of cylinders.
- By type of crankshaft.
- By construction (open-drive, semi-hermetic, or hermetic).

The construction of a reciprocating piston compressor resembles that of the automobile engine. Like an automobile engine, a reciprocating compressor has a crankshaft, connecting rods, pistons, cylinders, and intake and exhaust valves. Reciprocating compressors are usually driven by an electric motor. The motor's rotary motion is changed to *reciprocating* motion (back-and-forth action in a straight line) through the action of a crankshaft and connecting rods. The reciprocating motion moves pistons up and down in cylinders to draw in and compress the refrigerant, **Figure 18-9**.

Figure 18-10 shows the basic operation of a reciprocating compressor. During the intake stroke, the piston moves downward in the cylinder. The vacuum created as the piston moves downward draws refrigerant vapor from the suction line through the intake valve and into the cylinder. During the exhaust stroke, the piston moves upward. As it moves up, it compresses the vaporized refrigerant into a much smaller space. When a sufficient pressure is reached, the compressed vapor is pushed through the exhaust valve into the condenser.

Copyright Goodheart-Willcox Co., Inc.

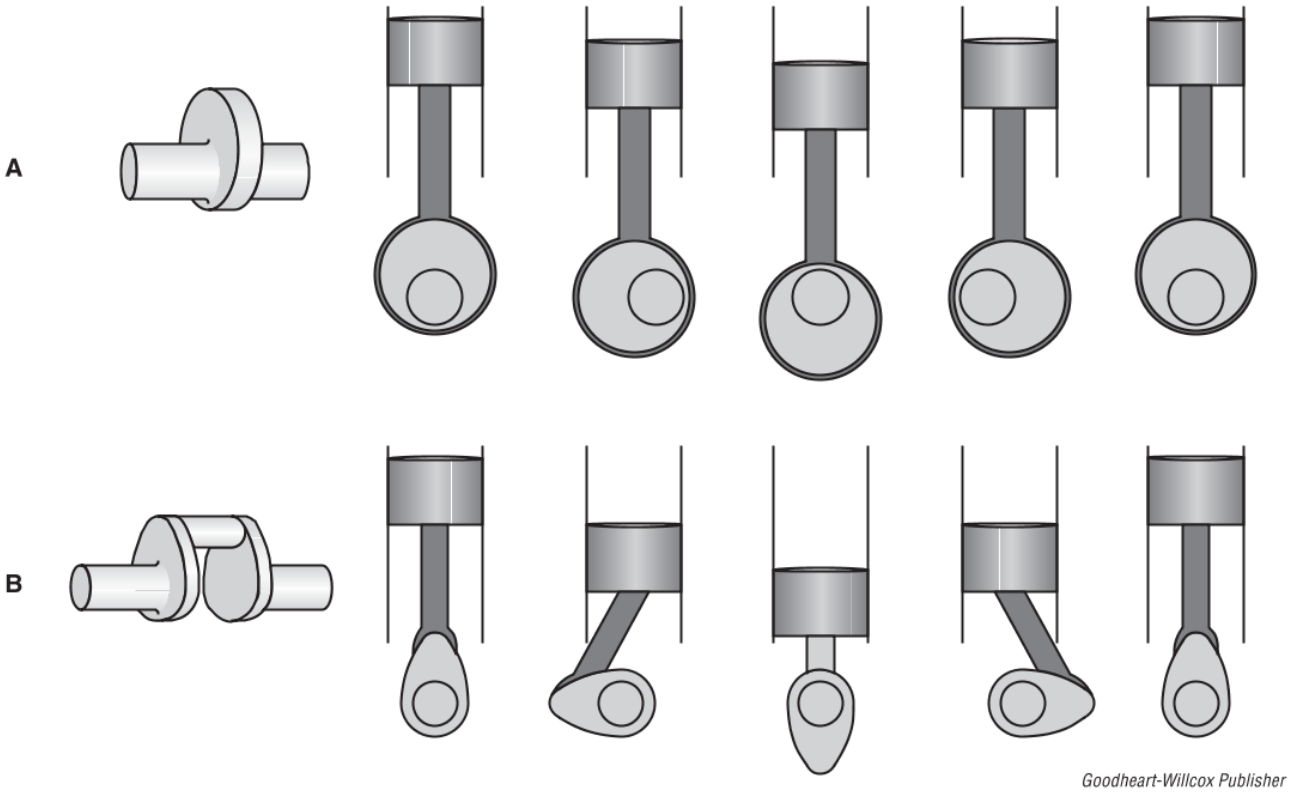

Figure 18-9. The two types of crankshafts and connecting rods are shown completing one complete revolution. A—Eccentric-type crankshaft and connecting rod. B—Crank throw–type crankshaft and connecting rod.

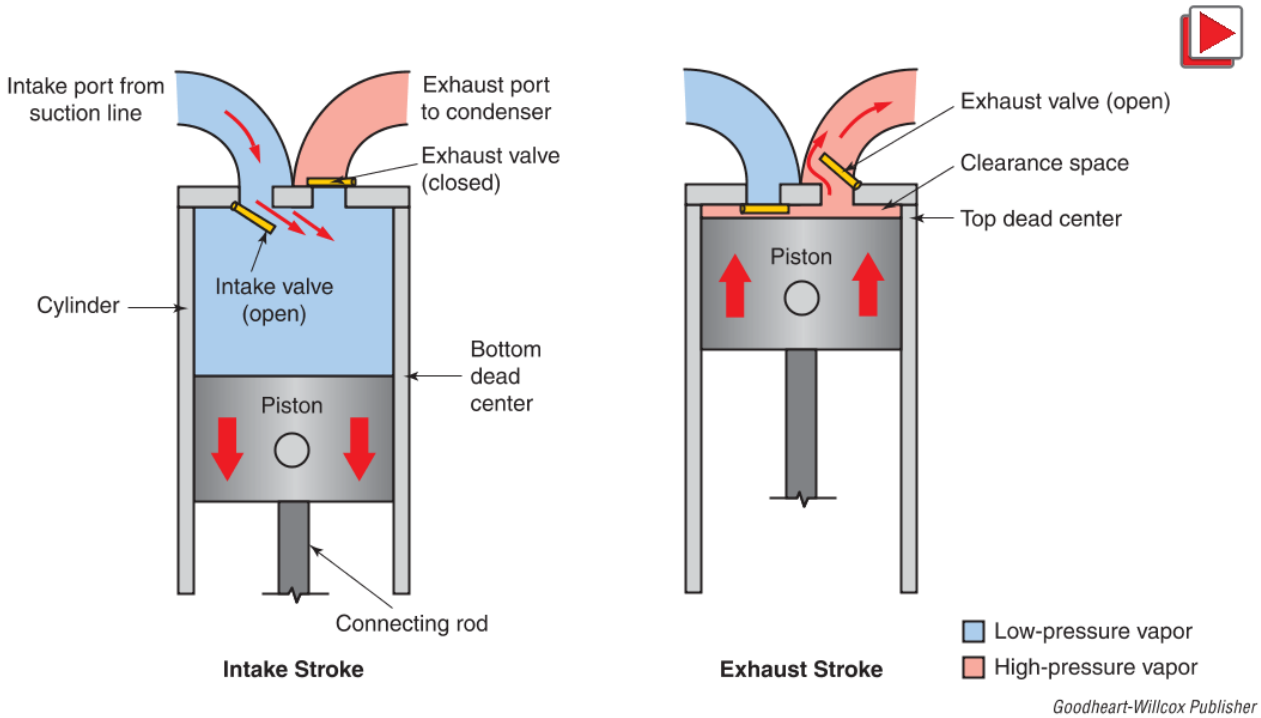

Figure 18-10. Basic operation of a reciprocating compressor. During the intake stroke, the piston moves down in the cylinder, creating suction and drawing refrigerant through the intake valve. During the exhaust stroke, the piston moves up in the cylinder, sealing the intake valve and compressing the refrigerant. When the refrigerant reaches a sufficient pressure, it forces open the exhaust valve and exits into the discharge line.

Copyright Goodheart-Willcox Co., Inc.

Crankshaft

A ***crankshaft*** is a device used to change rotary (circular) motion into reciprocating (back and forth) motion. As the compressor's drive motor turns the crankshaft, the connecting rods rise and drop, **Figure 18-11**.

To accomplish a reciprocating motion, a crankshaft uses offset journals (crank throws) or eccentrics attached to the connecting rods. An ***eccentric*** is a shaft section that is larger and has a different center than the rest of the shaft. The crank throw–type of crankshaft is most common. Refer to **Figure 18-12**.

The crankshaft is usually made of forged or cast steel. It must be carefully machined to the specific size and shape to ensure correct movement. Some compressors use an eccentric that is part of the crankshaft or is fastened to a straight shaft. The eccentric is counterweighted to reduce vibration. An eccentric also eliminates the need for connecting rod caps and bolts, **Figure 18-13**.

The crankshaft main bearings support the crankshaft and provide a low-friction surface for it to rest on as it rotates. The bearings must also carry any load applied to the crankshaft. The bearings are fitted with great accuracy. Clearance for lubrication is usually .001′ (.0254 mm).

In open-drive compressors, various methods are used to attach the drive pulley to the crankshaft. These include a standard taper, a key, and a nut and lock washer combination.

CMP Corporation

Figure 18-11. A crankshaft used in a reciprocating compressor.

Connecting Rods

A ***connecting rod*** connects a piston to a crankshaft. A conventional connecting rod used with a crank throw–type crankshaft often has a split lower end. This end clamps around the crankshaft journal or crank throw, **Figure 18-14**.

Connecting rod bearings installed between the connecting rod and the crankshaft journal provide a low-friction surface that allows the connecting rod to slide on the crankshaft journal as the crankshaft rotates. This sliding action allows the connecting rod to maintain its vertical orientation as the crankshaft rotates through 360°.

The connecting rods used with eccentric-type crankshafts usually have cast-iron bearing surfaces. The end of the connecting rod that connects to the eccentric is a solid ring. It must be mounted on the

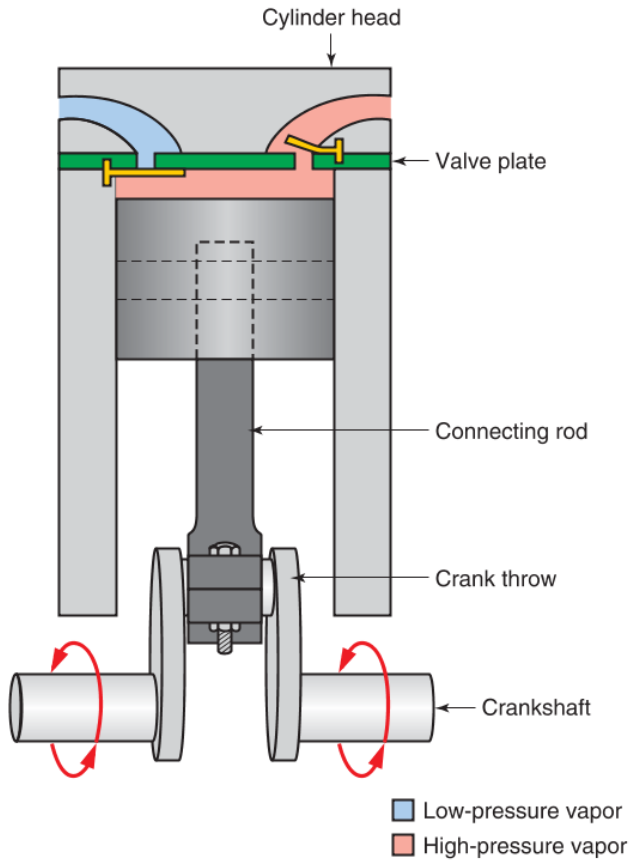

Goodheart-Willcox Publisher

Figure 18-12. Crank throw–type crankshaft. As the crankshaft turns, the piston reciprocates (moves up and down). The connecting rod oscillates (swings back and forth) as it reciprocates with the piston. The crankshaft journal rotates inside the lower end of the connecting rod, which allows the connecting rod to maintain its vertical orientation.

Copyright Goodheart-Willcox Co., Inc.

eccentric before the crankshaft and eccentric are assembled. See **Figure 18-15**.

Pistons, Piston Rings, and Piston Pins

A ***piston*** is the part of the compressor that actually compresses the gas. They are driven up and down in the cylinders by the connecting rods. As pistons operate, they draw in and compress the refrigerant.

When a piston is at the top of the cylinder, the volume of the cylinder is low and the pressure inside the cylinder is high. As a piston moves down in the cylinder, the volume increases. The increase in volume creates a vacuum that draws refrigerant in through the intake valve. As a piston returns to the top of the cylinder, the volume of the cylinder decreases, increasing the pressure inside the cylinder and compressing the refrigerant.

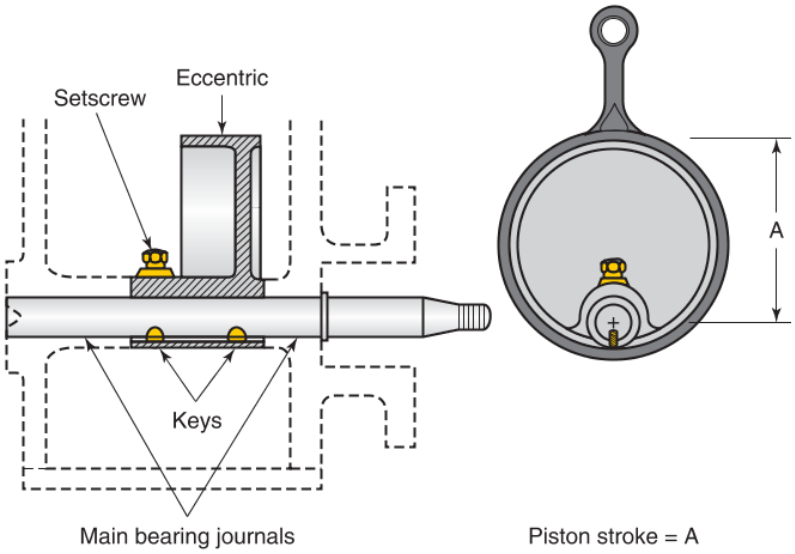

Goodheart-Willcox Publisher

Figure 18-13. Eccentric-type crankshaft. Note that the eccentric is attached to the crankshaft with keys and a setscrew. The eccentric is free to rotate inside the lower end of the connecting rod.

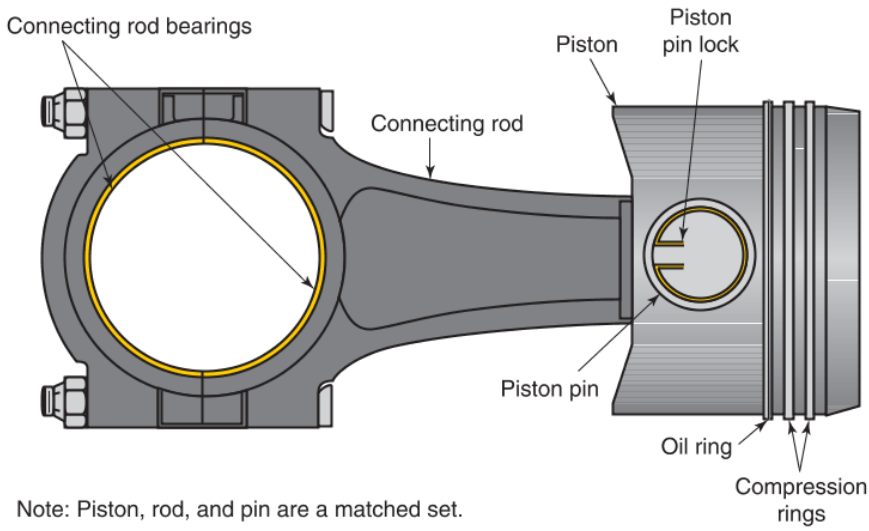

Goodheart-Willcox Publisher

Figure 18-14. Compressor piston and connecting rod assembly. Note how the connecting rod's lower (left) end is split and bolted together. This makes it possible to install the bearing inserts that will ride on the crankshaft journal.

Copyright Goodheart-Willcox Co., Inc.

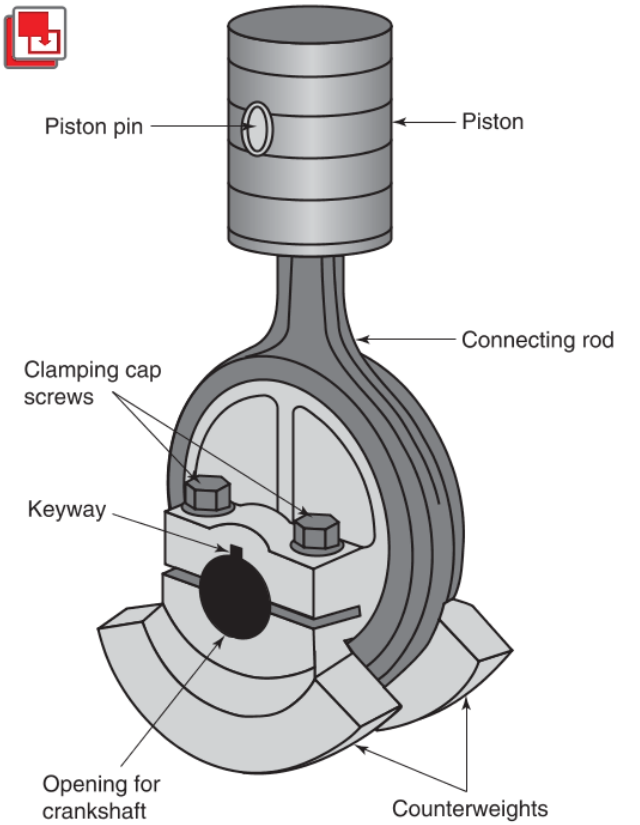

Goodheart-Willcox Publisher

Figure 18-15. An eccentric, connecting rod, and piston assembly. The entire assembly is attached to a straight shaft. Note the clamping cap screws and balance weights.

CMP Corporation

Figure 18-16. A new piston shown top and bottom.

Pistons used in open-drive compressors are usually made of cast iron. In small, high-speed hermetic compressors, they are made of die-cast aluminum.

A ***piston ring*** is a split metal ring that is installed in a groove that encircles the piston. The piston ring has an outside diameter slightly larger than the cylinder. It has an inside diameter slightly smaller than the piston diameter, which keeps the ring seated in the groove. The ring also has a small gap between the ends. The ends of the ring are beveled so they can overlap slightly when the ring is compressed. Piston rings are usually made of cast iron or bronze, **Figure 18-16**.

Each piston is equipped with multiple rings. When the piston is installed in the cylinder, the rings are compressed so they will fit into the cylinder. However, because the rings have natural diameters larger than the cylinder's, they constantly push outward against the cylinder walls, forming a very tight seal.

There are two types of piston rings. The upper rings are known as ***compression rings***. Their primary purpose is to prevent pressurized refrigerant from blowing past the piston, into the crankcase. The lower ring is called the ***oil ring***. The oil ring may be composed of multiple parts. It is designed to help lubricate the cylinder wall while simultaneously preventing excess lubricant from entering the cylinder. Rings should be fitted to the groove as closely as possible and still allow movement. The gap should be about .001″ (.0254 mm) for each inch of piston diameter.

Copyright Goodheart-Willcox Co., Inc.

The pistons in some small compressors do not have piston rings. Instead, the pistons have oil grooves cut in them. Oil fills the grooves and creates a seal between the piston skirt and the cylinder wall.

The temperature of compressor pistons seldom gets above 250°F (121°C). Thus, there is not much expansion of either the piston or the cylinder. Since the compressor design does not need to allow for much expansion, the pistons can be fitted with as little as .0002″ (.0051 mm) clearance for each inch of piston diameter.

Piston pins are metal cylinders that connect the pistons to the connecting rods. They are made of case-hardened, high-carbon steel and are accurately ground to size. They are usually hollow to reduce weight. Most piston pins are the full-floating type. This means the pin is free to turn in both the connecting rod bushing and the piston bushings.

In hermetic systems, the pistons and rings (if used) are constructed much the same as those used in open-drive compressors. However, the hermetic compressors usually run at a higher speed than open-drive compressors. Therefore, the pistons are smaller in diameter and are made as light as possible.

Cylinders

Cylinders are the bores in the cylinder block, within which the pistons move up and down. In some compressors, the cylinder walls are an integral part of the cylinder block. Other compressors are built with removable cylinder liners, or sleeves, that can be replaced when worn, **Figure 18-17**.

Compressor cylinders are usually made of cast iron. The cast iron must be dense enough to prevent seepage of pressurized refrigerant through the cylinder wall. Some nickel is usually added to give the casting the desired density. The cylinders in some hermetic compressors may be made of aluminum or other materials.

CMP Corporation

Figure 18-17. Two different styles of cylinder liners.

On small compressors, the exterior surfaces of the cylinder block have cooling fins to provide better air cooling. Larger compressors may have water jackets surrounding the cylinders for cooling. Usually, the cylinder block is part of the same casting as the crankcase. This design cuts down the number of joints that might leak. Other compressors have removable cylinder blocks that bolt to the crankcase.

Valves and Valve Plates

A compressor's valves regulate the flow of refrigerant into and out of the cylinder. There are a number of different types of valves used in refrigeration compressors. Two of the most common are reed valves and poppet valves. See **Figure 18-18**.

Reed Valves

Reed valves are the simplest of the valve designs. They are strips of spring steel that bend to open the valve passage, and spring back to their flat shape to close the valve passage. Valve stops are stiff metal backers that are installed over the reed valves to prevent them from opening too far and becoming permanently bent. Compressor reed valves are similar to the type of valves found in most two-stroke engines.

Reed valves are usually made of high-carbon alloy steel. They are heat treated to give them the properties of spring steel and are ground to a perfectly flat surface. The entire reed valve assembly usually consists of a valve plate, an intake valve, an exhaust valve, valve stops, and valve retainers, **Figure 18-19**.

Valve plates are sometimes made of cast iron. Hardened steel is also used, because it allows the plate to be thinner with longer wearing valve seats. Reed valves are mounted in a ***valve plate*** under the cylinder head. The valve plate has both the intake and exhaust valve located in it, **Figure 18-20**.

A compressor's intake valve is mounted on the cylinder side of the valve plate. It may be held in place by small pins or by the clamping action between the cylinder block, valve plate, and cylinder head. The compressor's exhaust valve is mounted on the cylinder-head side of the valve plate and may also be pinned or clamped in place.

As the piston moves down in the cylinder, it creates a vacuum. Although the refrigerant in the intake manifold is at a low pressure, it is still a greater pressure than the vacuum in the cylinder. Refrigerant pushes the intake valve open and rushes into the cylinder. When the pressure between the intake and cylinder equalizes, spring pressure closes the valve.

Copyright Goodheart-Willcox Co., Inc.

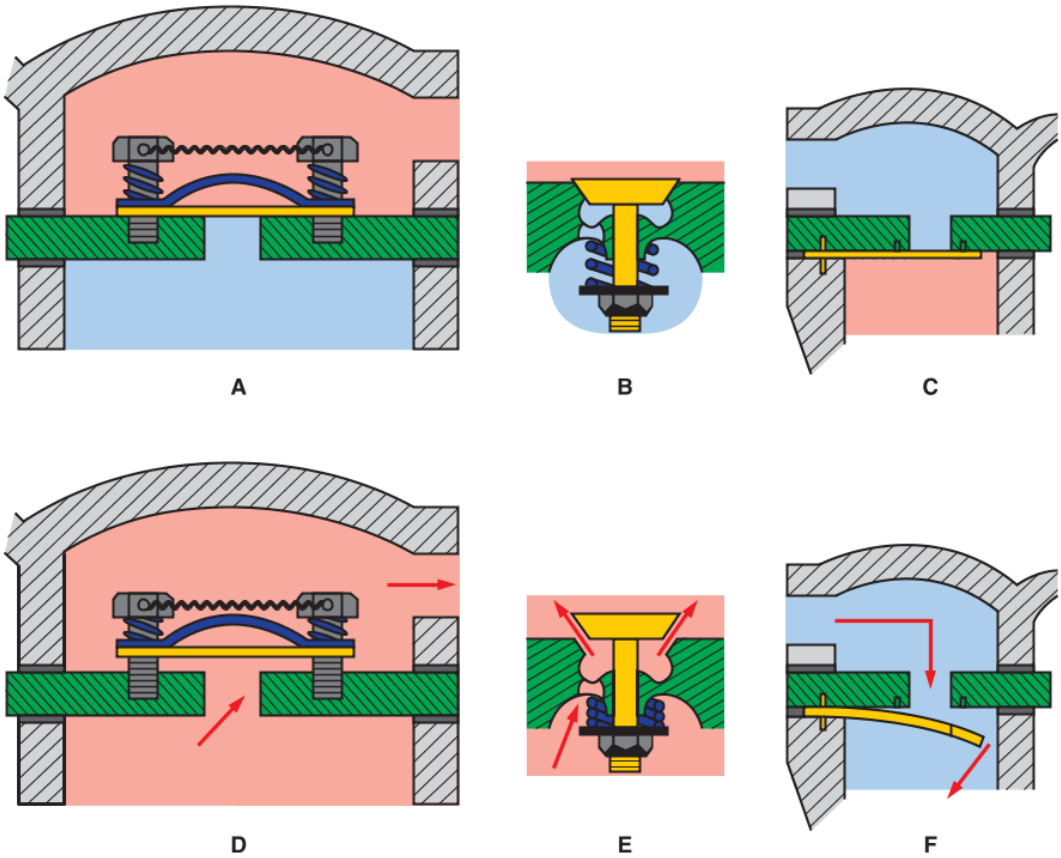

Goodheart-Willcox Publisher

Figure 18-18. Typical compressor valve designs. In each case, pressure differences open and close the valves. A—Reed valve, spring-assisted. B—Poppet valve, spring-assisted. This type of valve is used on some large compressors. C—Reed valve. D—An open spring-assisted reed valve. E—An open spring-assisted poppet valve. F—An open reed valve.

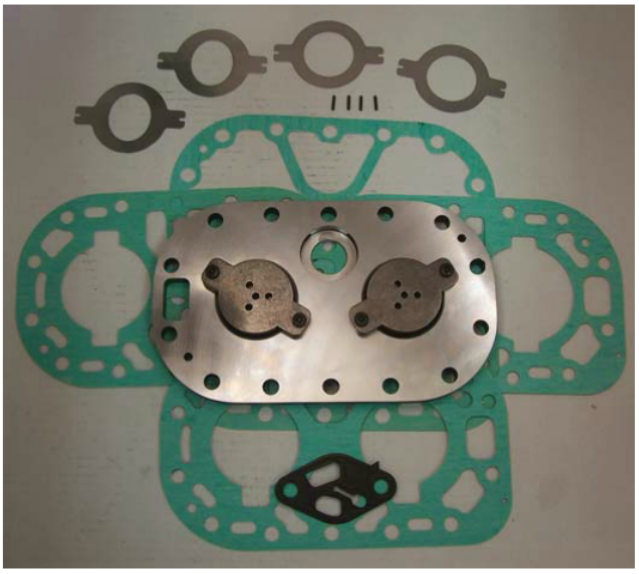

CMP Corporation

Figure 18-19. A valve plate assembly with reed valves and gaskets.

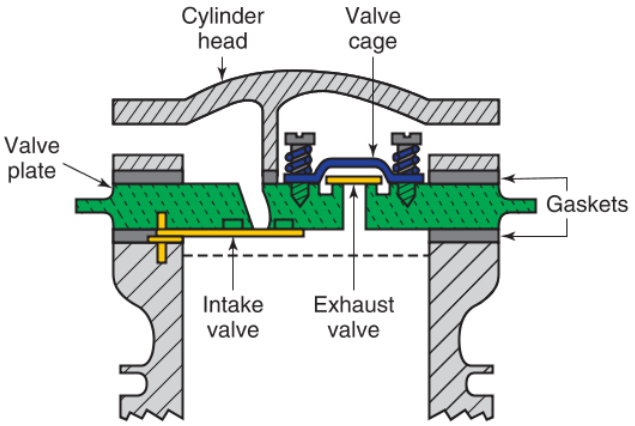

Goodheart-Willcox Publisher

Figure 18-20. Cross-section of a typical compressor valve plate. Heavy springs on the exhaust valve cage permit a greater valve lift to protect the compressor in case of severe liquid refrigerant or oil pumping.

Copyright Goodheart-Willcox Co., Inc.

As the piston moves upward in the cylinder, the increased pressure seals the intake valve. It also starts to apply pressure to the exhaust valve. However, the exhaust valve has high-pressure refrigerant on the opposite side of it, pushing the valve closed. When the pressure in the cylinder exceeds the pressure on the high-side of the system and the spring pressure of the valve, the exhaust valve is forced open and refrigerant from the cylinder flows through the valve and into the discharge line.

Poppet Valves

Poppet valves are used in some larger compressors. They are very sturdy, but operate slowly. Therefore, they are only suitable for low-speed compressors. Poppet valves have a large valve head that seals against a matching seat in the valve plate and a long stem that extends through a valve guide in the valve plate. The guide ensures that the valve can move only parallel to piston travel. When the valve is pushed open, a spring on the stem part of the valve is compressed. When the pressure that opened the valve drops below the pressure applied by the spring, the valve snaps shut. Compressor poppet valves are very similar to the type of valves found in four-stroke engines.

Of the two compressor valves (the intake and the exhaust), the intake valve presents fewer problems. This is because it is constantly lubricated by oil circulating with the cool refrigerant vapors. Also, it operates at a relatively cool temperature.

The exhaust valve must be fitted with special care. It operates at higher temperatures and must be leakproof against a relatively high pressure difference. Due to the high vapor pressures and the high temperatures, there is a tendency for heavy molecules of hydrocarbon oil to collect as carbon on the valve and valve seat.

If the valves open further than they are supposed to, a valve noise develops. If the valves do not open far enough, not enough vapor can move past the valve. In small high-speed compressors, the intake valves are made very light. They are also made as large as possible. The cylinder intake valve is only open a fraction of a second. The valve design allows a greater amount of refrigerant vapor to enter during that time.

The piston is designed to come as close as possible to the valve plate without touching it. This design forces as much of the vapor through the exhaust valve and into the high-pressure side as possible. When the piston is at top dead center (TDC) of its stroke, there is a very small clearance. The clearance between the piston and valve plate is approximately .010″ to .020″ (.254 mm to .508 mm). The volume of space created is called ***clearance space***, **Figure 18-21**.

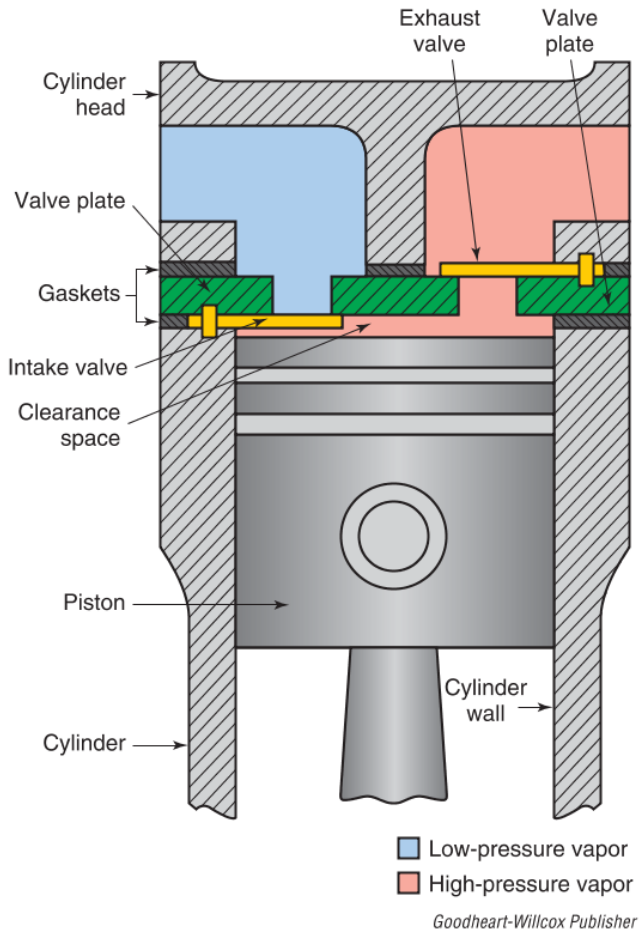

Figure 18-21. This piston is at the top of its stroke. Note the small clearance space.

Cylinder Head

The ***cylinder head*** serves as a pressure plate, sealing the top of the cylinder so the refrigerant can be compressed. It also supports and holds the valves and valve plate in position. The pressures of compression may exceed 400 psi (2760 kPa), depending on the kind of refrigerant used. The valve plate must, therefore, have good support. There must be no leakage at the gaskets on either side of the valve plate. Cylinder heads for both open-drive and hermetic compressors are usually made of cast iron.

A cylinder head also provides the vapor passages into and out of the compressor. In some hermetic systems, the entire compressor housing is inside a dome. The entire space within the dome is open to the suction line. Consequently, the whole dome is under low-side pressure. In such systems, no intake manifold is required. Only an opening to the intake valve or valves is required.

Copyright Goodheart-Willcox Co., Inc.

Compressor Housing and Crankcase

In both open-drive and hermetic compressors, the compressor housing provides support to the cylinders, crankshaft, valves, oil pump, lubrication lines, refrigerant inlet, and exhaust openings. In hermetic systems, the housing also supports and aligns the driving motor. The portion of the compressor housing that supports the crankshaft is called the ***crankcase***. The portion of the housing that contains the cylinders is generally referred to as the cylinder block. In some compressor designs, the crankcase and cylinder block are separate units that are bolted together. In other designs, the crankcase and cylinder block are cast together as a single unit.

Intake and Exhaust Ports

In conventional open-drive compressors, the inlet and exhaust ports are part of the cylinder head. These ports are usually fitted with service valves. Some larger hermetic compressors also have service valves. In small hermetic compressors, the inlet and exhaust lines go directly from the compressor inlet and exhaust port through the compressor dome. They are not generally supplied with service valves. See the line connections in **Figure 18-22**.

Reciprocating Compressor Designs

There are many design variations for reciprocating compressors. Some compressors have multiple cylinders to increase capacity, and some have mechanisms for changing their pumping capacity. Other compressor designs use alternative methods of converting the rotation of the crankshaft to reciprocal motion.

Multi-Cylinder Designs

To increase the capacity of a reciprocating compressor, designers could increase the size of the cylinder. However, having a single, large cylinder and piston could cause unacceptable vibration and pressure surges. As an alternative to increasing cylinder size, additional cylinders can be added to the compressor's

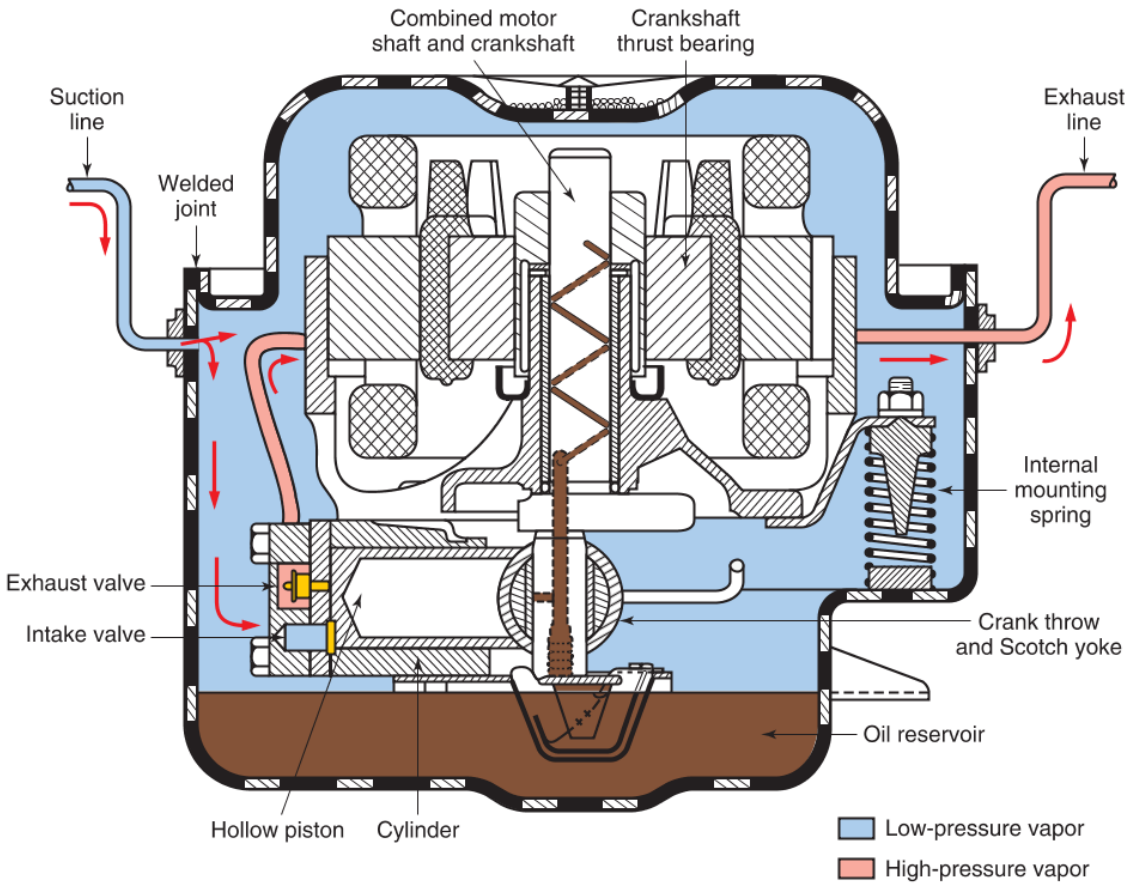

Goodheart-Willcox Publisher

Figure 18-22. In this hermetic compressor, the suction line is open to the entire dome. The intake valve allows the refrigerant inside the dome to pass into the cylinder during the intake stroke and closes during the compression stroke. The discharge line runs from the compressor cylinder head through the side of the housing.

Copyright Goodheart-Willcox Co., Inc.

design. Adding cylinders increases the pumping capacity for each revolution of the crankshaft.

Compressors can have from one to twelve cylinders. In multi-cylinder compressors, the crankshaft and cylinders are arranged to make the compressor as compact as possible while reducing surging and vibration. There are many different cylinder arrangements: vertical, V, W, Y, X, or radial. **Figure 18-23** illustrates some common cylinder and crankshaft arrangements.

Most two-cylinder compressors use an inline arrangement of the cylinders and a 180° crankshaft (crankshaft with eccentric centers or crank throws on opposite sides of the crankshaft centerline). While one piston is at the top of the stroke, the other piston is at the bottom. Other two-cylinder compressors have two cylinders at a 90° V. With this cylinder arrangement, a single-throw crank is used.

Some compressor designs place the cylinders directly across from each other. The pistons are positioned 90° apart, all the way around the crankshaft, and operate on a single horizontal plane. This arrangement is referred to as an X configuration. When cylinders are arranged in direct opposition, vibration and the need for counterweights are diminished.

Dual-Capacity Reciprocating Compressors

Dual-capacity reciprocating compressors use a special crankshaft design. One connecting rod is attached to a fixed eccentric on the crankshaft. The other connecting rod is attached to a movable eccentric that automatically positions itself off center from the

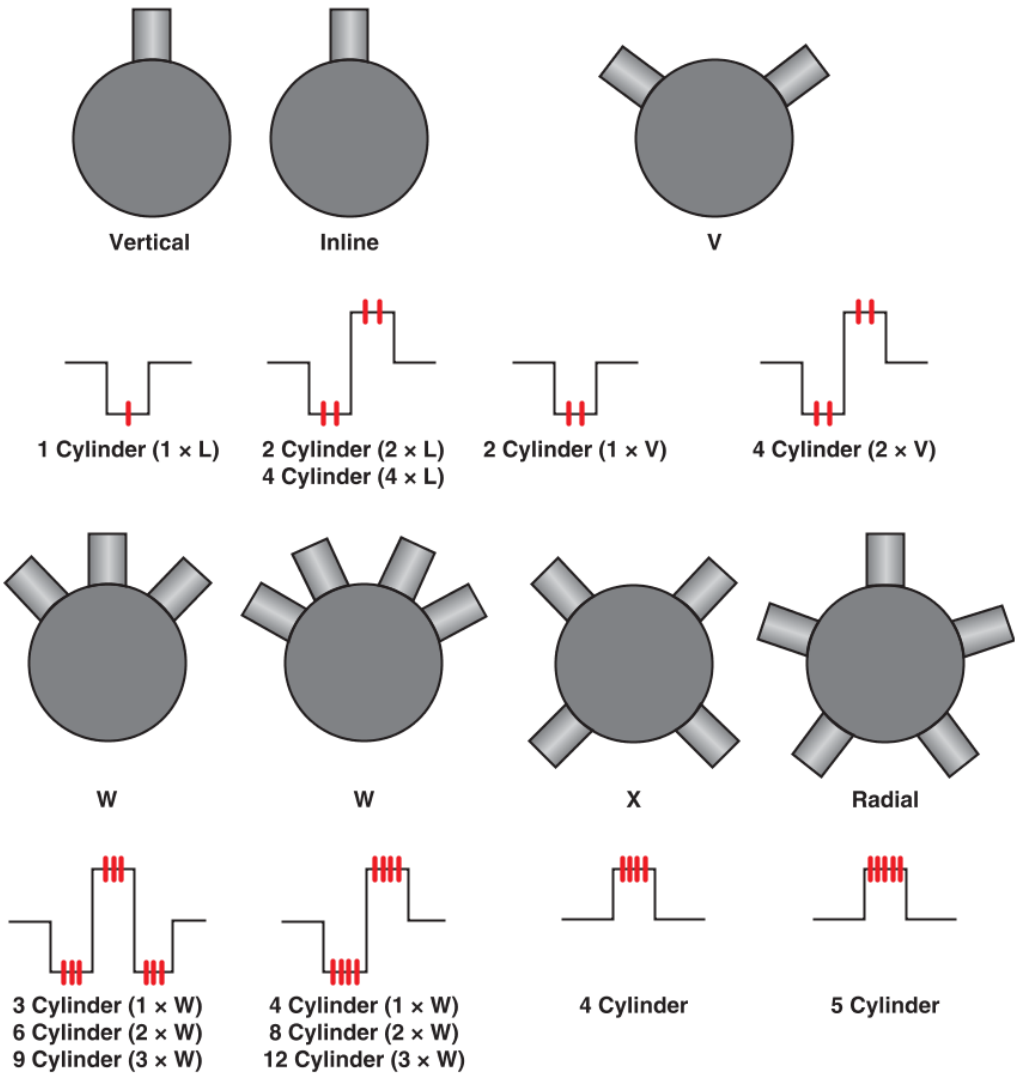

Goodheart-Willcox Publisher

Figure 18-23. Some common piston, cylinder, and crankshaft arrangements for single cylinder through twelve-cylinder compressors.

Copyright Goodheart-Willcox Co., Inc.

crankshaft when the shaft is turning in the forward direction of rotation. This causes the piston to move up and down as the crankshaft rotates. When crankshaft rotation is reversed, the eccentric repositions itself at the center axis of the shaft, causing its piston to sit idle, **Figure 18-24**.

This configuration allows the compressor to run at maximum capacity when needed and switch to lower capacity when high capacity is not needed. When operating in the lower capacity mode, the compressor cycles less frequently and runs for longer periods. Longer cycle times decrease start/stop cycles, resulting in less voltage sag and wear on the compressor. The longer cycles also allow the evaporator to extract more moisture from conditioned air, resulting in lower humidity and increased comfort.

Scotch Yoke

In a ***Scotch yoke*** design, there is no connecting rod. The cylinder and piston are longer than those used in a traditional reciprocating compressor design. Even at the lower end of the stroke, the piston is guided by the cylinder wall. The crankshaft pin, also called the crank throw, connects to the lower end of the piston, **Figure 18-25**. A floating bearing in the end of the piston distributes the load and reduces friction. The Scotch yoke is popular in small high-speed compressors.

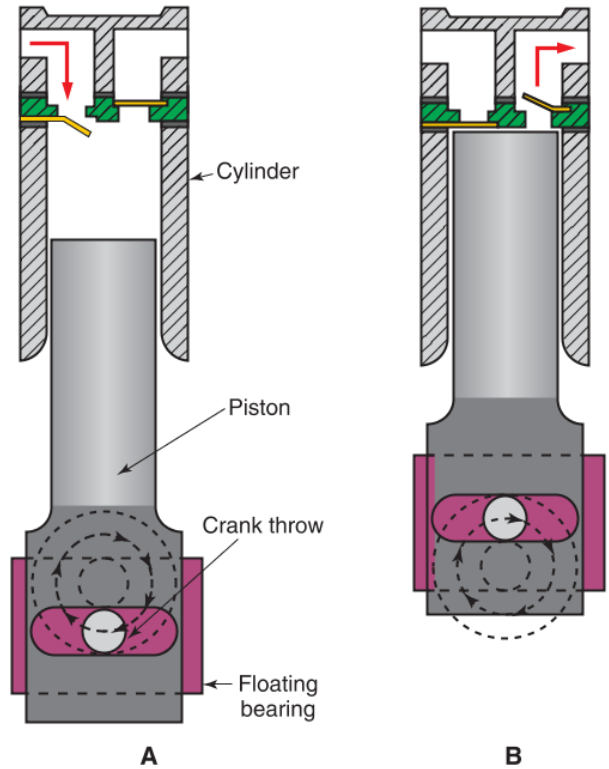

Goodheart-Willcox Publisher

Figure 18-25. In a Scotch yoke design, the piston is connected directly to the crankshaft. No connecting rod is used. Instead, the bottom of the long piston has a yoke that connects to the crank throw. The compressor cylinder serves as a guide. A—The piston is at the bottom of the stroke (end of the intake stroke). B—The piston is at the top of the stroke (end of the exhaust stroke).

18.2.2 Rotary Compressors

A ***rotary compressor*** is a compressor in which vapor compression takes place in spaces between the cylinder wall and sides of an off-center rotor that spins inside the cylinder. A check valve is usually placed in the discharge. It prevents backflow of refrigerant during the Off cycle. A check valve should be placed in the oil lines for the same reason.

Rotary compressors are commonly used to power small refrigerated appliances such as window air conditioners, packaged terminal air conditioners, and heat pumps up to five tons. Rotary compressors have high

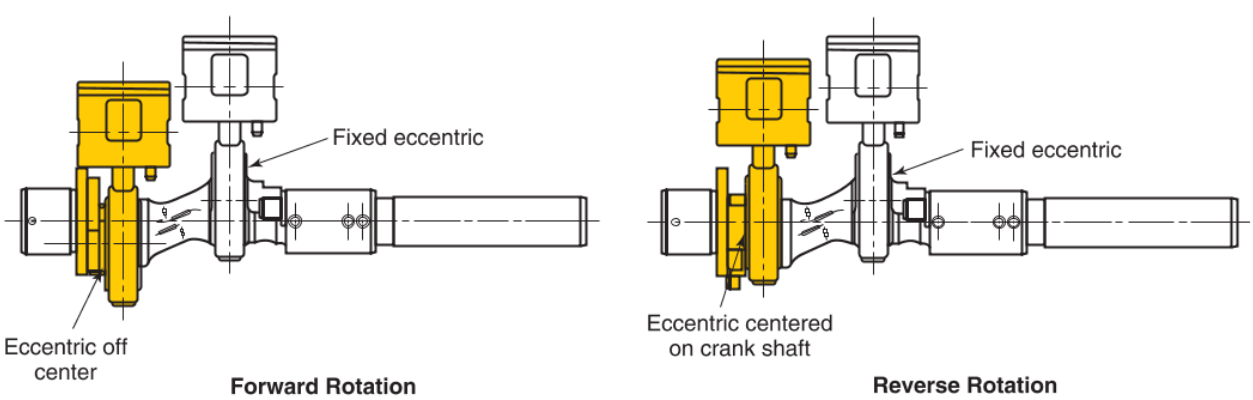

Bristol Compressors, Inc.

Figure 18-24. A dual-capacity compressor crankshaft. When the compressor runs forward, the eccentric is positioned off center from the crankshaft, and both pistons move up and down. When the compressor runs in reverse, the movable eccentric centers on the crankshaft, so that only one piston moves up and down.

Copyright Goodheart-Willcox Co., Inc.

volumetric efficiency. There are two basic types of rotary compressors: stationary-blade and rotating-vane.

Rotating-Vane Rotary Compressors

A rotating-vane rotary compressor uses an off-center rotor to turn vanes (blades) that create pockets between the rotor and cylinder wall. The vanes in some compressors are spring-loaded so they can adjust position and continually push out against the cylinder walls as the shaft rotates. In other designs, the vanes are pulled outward from their grooves solely by the centrifugal force of the spinning shaft. **Figure 18-26** shows the operating principles of a typical two-blade rotating-vane compressor.

The low-pressure vapor from the suction line is drawn into the opening between the vanes as the vanes revolve. The trapped vapor in the space ahead of the lead vane is compressed until it can be pushed into the exhaust line to the condenser. The basic operation of a multiple-vane rotary compressor is the same as that of the two-vane compressor previously described, **Figure 18-27**.

Rotating-vane compressors have three advantages:

- They provide a large size opening into the suction line.
- They provide large inlet port openings.
- They have a very small clearance space.

The low-side pressure may be quite low, but the low-side vapor will be drawn into the compressor under a very small pressure difference. Rotating-vane compressors provide a large opening into the compressor from the low side. Thus, more vapor is drawn in on the intake stroke. The clearance space provided in these compressors is small. Therefore, all of the vapor drawn in on the intake stroke is pushed out on the exhaust stroke. This increases the compressor efficiency.

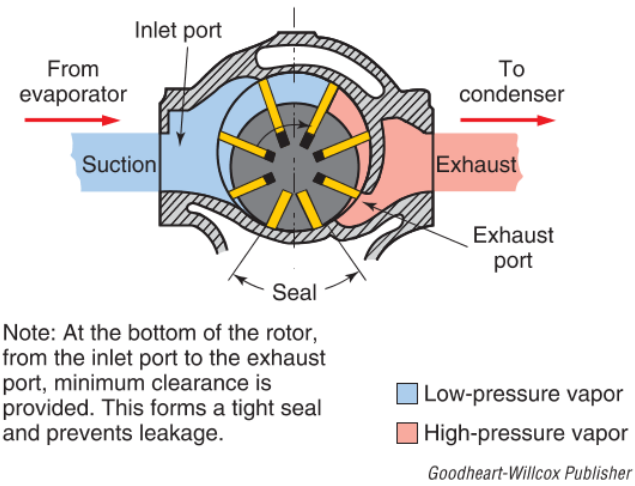

Figure 18-27. An eight-blade rotary compressor. In this image, the rotor is rotating clockwise. Red arrows show the direction of vapor flow. The inlet port is much larger than the exhaust port. A large inlet port is needed to collect enough refrigerant vapor from the sparse low-pressure side (light blue).

Rotating-vane compressors are frequently used as the booster compressor in cascade systems. ***Booster compressor*** is the name commonly given to the first compressor in a cascade system.

Stationary-Blade (Divider-Block) Rotary Compressors

The blade on a stationary-blade rotary compressor is mounted in the housing assembly rather than on the shaft. The blade in this type of compressor is spring-loaded and presses against the rotor as it rotates. In both rotary compressor types, the blades provide a continuous seal for the refrigerant vapor. In a rotating vane compressor, the rotor stays in a stationary position as it spins the vanes. In a stationary blade compressor, the

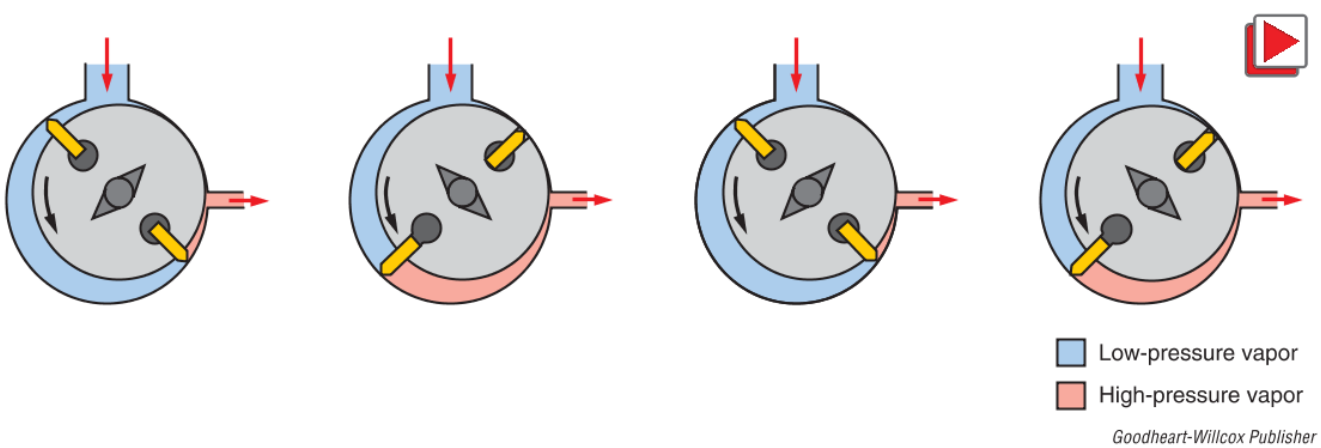

Figure 18-26. Basic operation of a rotating-vane rotary compressor. Black arrows indicate the direction of rotation of the rotor. Red arrows indicate the flow of refrigerant vapor.

Copyright Goodheart-Willcox Co., Inc.

blade stays stationary, while the rotor moves in an orbit around the inside of the cylinder. **Figure 18-28** shows a stationary-blade (often called a divider-block) rotary compressor.

An eccentric shaft rotates a rotor in a cylinder. This rotor constantly rolls against the outer wall of the cylinder. As the rotor (or roller) revolves, the blade traps quantities of vapor between the cylinder and rotor. The vapor is compressed into a smaller and smaller space as the rotor revolves. As the volume decreases, both the pressure and temperature increase. Finally the pressure opens the exhaust valve, and vapor is forced through the exhaust port. It enters the high-pressure side of the system (condenser).

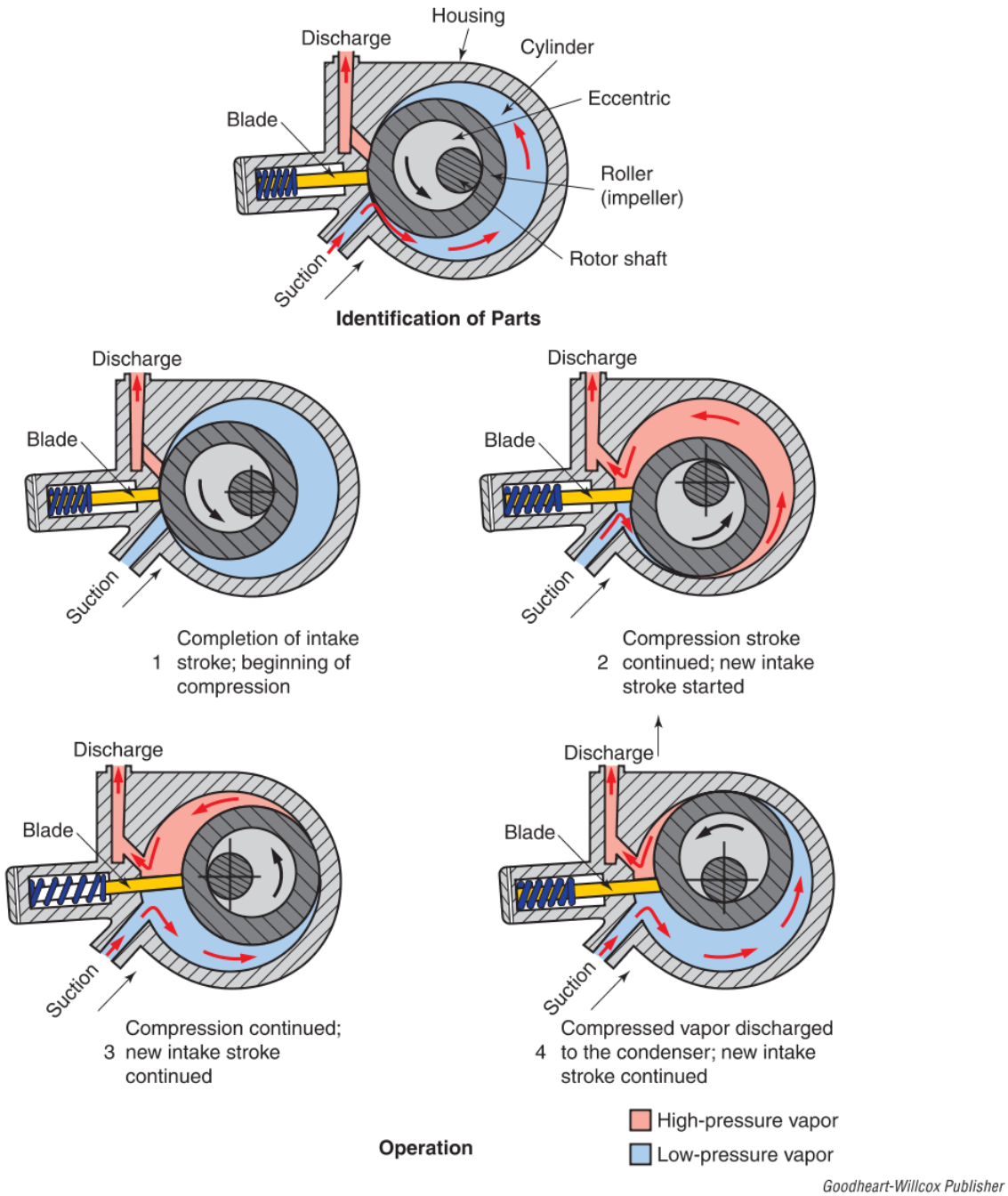

Figure 18-28. In a stationary-blade (or divider-block) rotary compressor, a single stationary spring-loaded blade remains in constant contact with a rotating impeller.

Copyright Goodheart-Willcox Co., Inc.

The compression action on one quantity of vapor takes place at the same time another quantity of vapor is filling the cylinder on the intake stroke. All of the parts are fitted to extremely close tolerances and clearances and the surfaces are extremely smooth. Therefore, no gaskets are needed in the compressor assembly.

Rotor Construction

In a rotating-vane compressor, the rotor is a fixed part of the shaft. The rotor length must be accurate to .0005″ (.0127 mm). Usually the slots for the blades are on a radius to the center of the shaft. To lower the starting load, one design puts the slots at an angle. This prevents the blades from touching the cylinder until the compressor nears its operating speed. In the stationary blade compressor, the rotor is attached to the eccentric. The eccentric is a fixed part of the shaft.

Blade (Vane) Construction

Rotating-vane compressors use two or more blades. These blades may be made of cast iron, steel, aluminum, or carbon. The blades are pushed outward from the bottom of their grooves by springs or by centrifugal force. This keeps the blades in contact with the cylinder walls, where they form a seal.

The compressor's efficiency depends greatly on the condition of the blade edge where it rubs on the cylinder. Each blade must be very accurately ground. It must be ground to fit the slots, the ends of the cylinder, and other surfaces in contact with the cylinder.

The single blades used in stationary-blade compressors are very similar in construction to the multiple blades in rotary-vane compressors. However, they fit in a slot in the compressor housing rather than slots in the rotor. Also, since they remain stationary, they are always spring-loaded.

Cylinder Construction

The cylinders in rotary compressors are usually made of cast iron. Each cylinder is accurately machined, honed, and lapped (finished) on the inner surface and on the ends. All cylinders have intake and exhaust ports. The intake ports are generally much larger than the exhaust ports. Some models have oil passages for lubrication. Cylinders are usually mounted on an end plate, which is part of the main compressor crankcase. Refrigerant passages continue into the end plate.

The exhaust reed valve is mounted on the exhaust port outlet of the compressor. It is mounted as close to the compression chamber as possible. Check valves are usually used in the suction line. They prevent the high-pressure vapor and compressor oil from flowing back into the evaporator. Four or more bolts hold the cylinder to the main part of the compressor. One or more steel dowel pins help align the cylinder on the back plate. Another accurately finished plate seals the other end of the cylinder.

18.2.3 Scroll Compressors

A ***scroll compressor*** produces vapor compression between the walls of a fixed scroll and an orbiting scroll. Its main compression parts consist of these two intertwined scrolls. One scroll is fixed to the housing and remains stationary, while the orbiting scroll revolves in an eccentric path around the center of the stationary scroll, **Figure 18-29**.

The space between the scrolls form a series of pockets. As the orbiting scroll moves, the sizes of the existing pockets are reduced as they are pushed toward the center of the two scrolls. This reduces the volume of the vapor in the pockets, **Figure 18-30**.

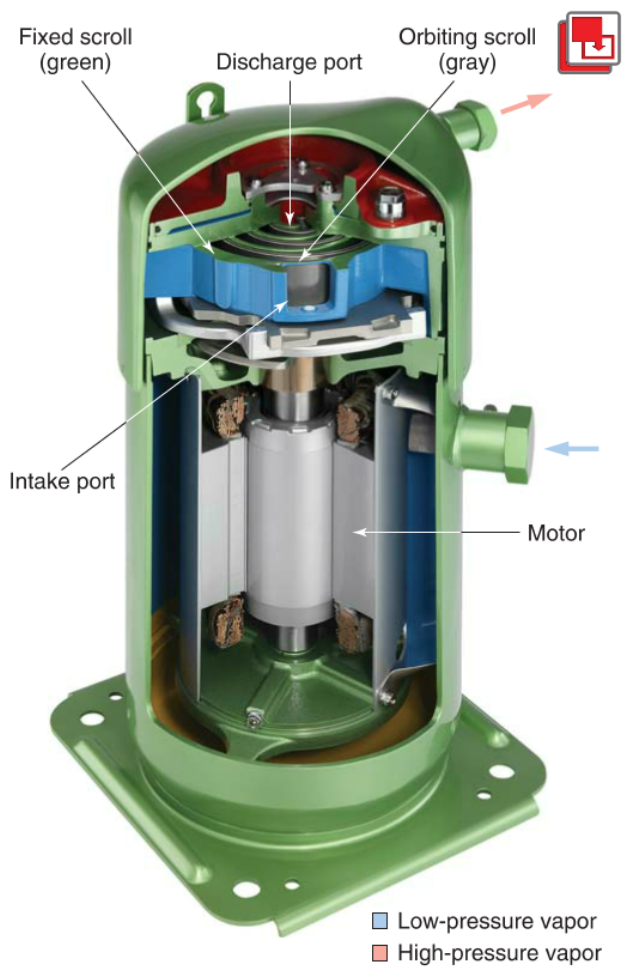

Bitzer

Figure 18-29. Cutaway of a scroll compressor showing its main parts.

Copyright Goodheart-Willcox Co., Inc.

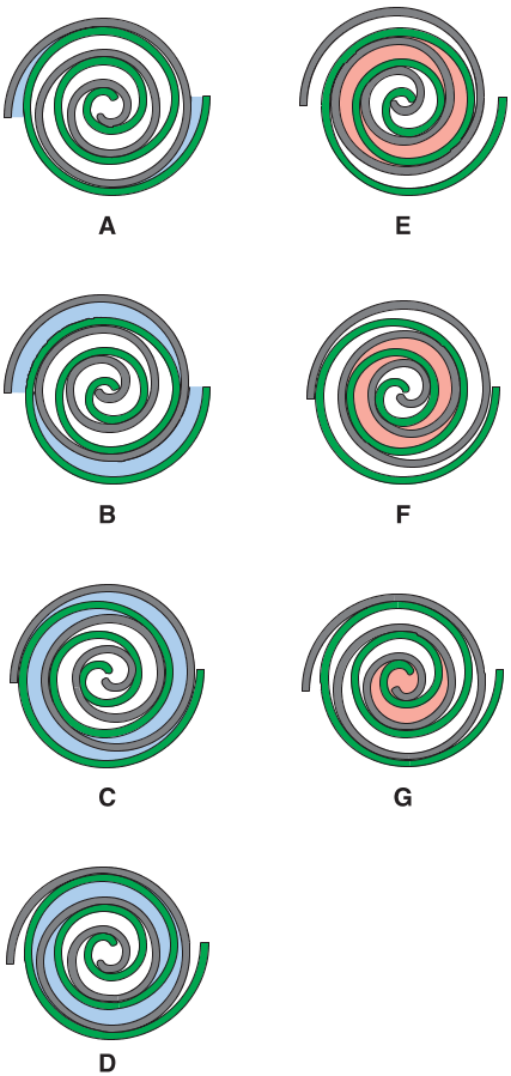

Goodheart-Willcox Publisher

Figure 18-30. Diagram showing scroll compressor process. A—Vapor enters the outer pockets between the scrolls. B—The full amount of vapor fills the inlet space for the first set of pockets. C—As the gray scroll orbits, it seals the pockets. D, E, F—The pockets get progressively smaller and pressure increases. G—The lead pockets are forced to the center of the scrolls, where the compressed vapor escapes through the discharge port. Note that new vapor pockets form continuously during the cycle.

As two high-pressure pockets are discharging, new low-pressure pockets are formed at the outer edges of the scrolls. When a pocket reaches the center of the scroll, the vapor inside the pocket is at a high pressure. It is discharged out of the center port, **Figure 18-31**.

The suction from the outer portion of the scroll and the discharge from the inner portion are continuous. Between the two scrolls, there are four sealed vapor pockets at various stages of compression at any given time. This continuous process gives the compressor very smooth action.

Some scroll compressors have the ability to modulate their capacity during operation. Depending on the compressor model, this can be done by opening a bypass port partway between the outer edge and the center of the fixed scroll. This bypass port redirects some of the partially compressed vapor back to the compressor inlet, reducing the overall capacity of the compressor. Other models are equipped with a variable speed motor that can be operated at different speeds to modulate capacity. Another method of modulating capacity is to briefly move the fixed scroll and the orbiting scroll apart, creating gaps between the vapor pockets that briefly allow the pressure differences between the pockets to equalize.

Scroll compressors are commonly used in residential air conditioning and heat pump applications. Benefits of scroll compressors include fewer moving parts, less internal friction, a smooth compression cycle resulting in less torque variation, low noise levels, and low vibration levels.

18.2.4 Screw Compressors

Screw compressors use a pair of special helical rotors to compress refrigerant vapor. The rotors trap and compress the refrigerant vapor as they revolve in an accurately machined compressor cylinder, **Figure 18-32**.

Figure 18-33 shows a cross section of a screw compressor. The two rotors are not the same shape. One rotor is referred to as male, the other as female. The male rotor, A, has four lobes. The female rotor, B, meshes with and drives the male rotor. It has six interlobe spaces. The cylinder, C, encloses both rotors.

In operation, the intake (low-pressure vapor) enters at one end of the compressor and is discharged (compressed vapor) at the opposite end. The refrigerant vapor is drawn in as shown in **Figure 18-34**.

The male rotor rotates 50% faster than the female rotor because there are four lobes on the male rotor and six meshing grooves on the female rotor. The grooves and lobes on the rotors are helical, meaning that they circle the rotor as they progress from one end of the rotor to the other. The rotors provide a continuous, steady pressure rather than a pulsating, pumping pressure like that produced by a reciprocating compressor. The continuous pumping action results in very little vibration during compressor operation.

The capacity of a screw compressor is adjusted with an unloader mechanism. The unloader mechanism reduces the load on the compressor for easier

Copyright Goodheart-Willcox Co., Inc.

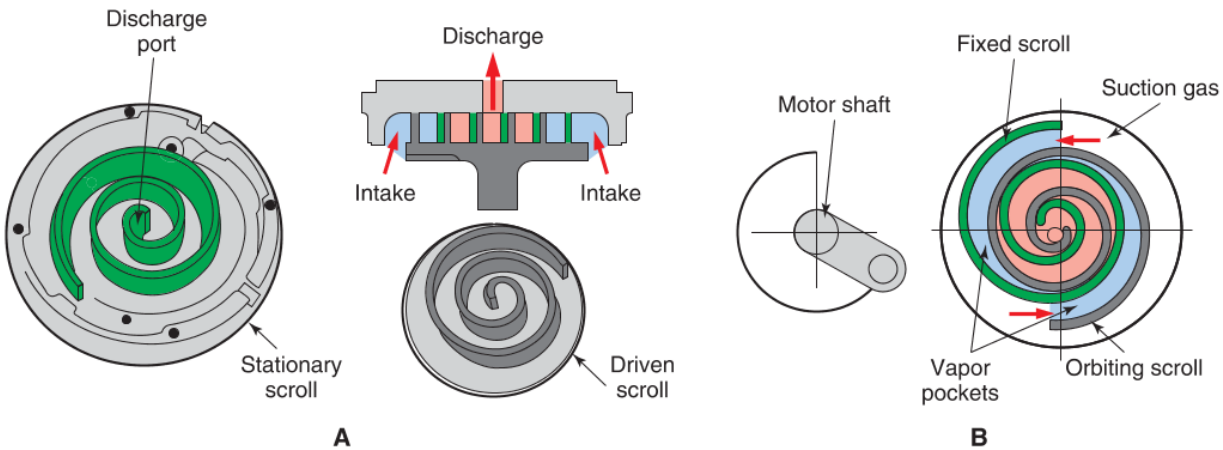

Image courtesy of Trane, a brand of Ingersoll Rand

Figure 18-31. Scroll compressor design. A—The upper scroll is stationary and the lower scroll is driven. Vapor enters the compressor through side gaps between the upper and lower scrolls. The discharge port is built into the upper scroll. B—Note how the rotation of the motor shaft causes the orbiting scroll to orbit (not rotate) about the shaft center.

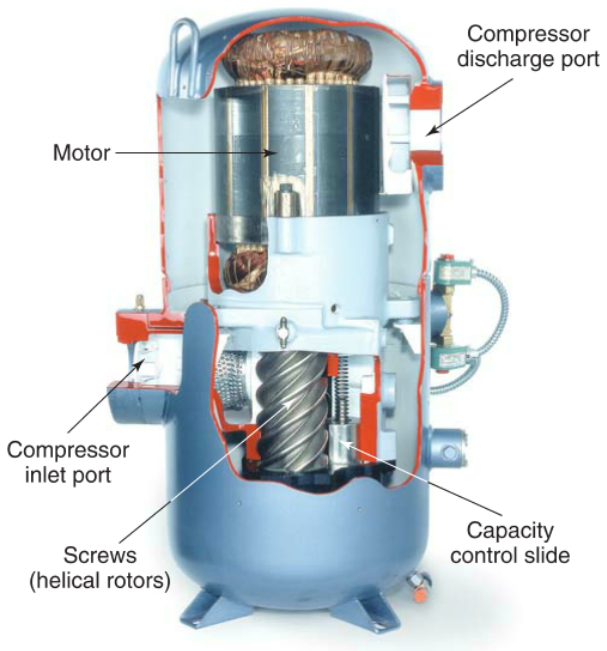

Hartford Compressors, Inc.

Figure 18-32. Hermetic screw compressor, which uses a matched set of helical rotors to compress refrigerant vapor.

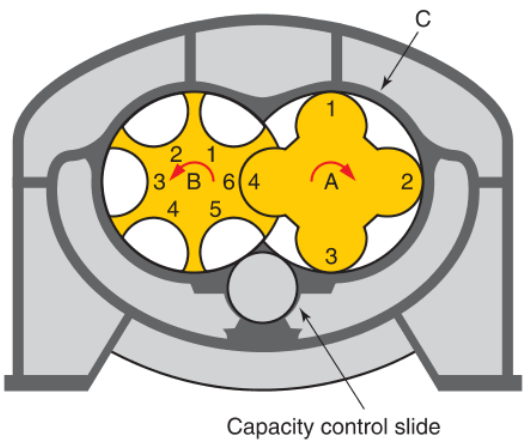

ABB Stal Refrigeration Corporation

Figure 18-33. Cross-section of a screw compressor. A—Male rotor. B—Female rotor. C—Cylinder.

starting. It is also used to adjust the compressor capacity so that the compressor can run as efficiently as possible.

There are a number of different unloader systems. The compressor may incorporate a slide valve that repositions the discharge port in relation to the rotors. As the discharge port moves closer to or farther from the suction port, the volume trapped between the rotors becomes smaller or greater, **Figure 18-35**.

Other compressors use different unloader mechanisms. Some have a slide valve that opens and closes passages that allow some of the trapped vapor to recirculate back to the suction side of the compressor. Many compressors use a combination of the two methods to adjust capacity.

Unloader mechanisms provide a unique feature of screw compressors: their ability to control capacity through infinitely variable unloading. Such a design allows for smooth, accurate control of temperature in the conditioned space.

Copyright Goodheart-Willcox Co., Inc.

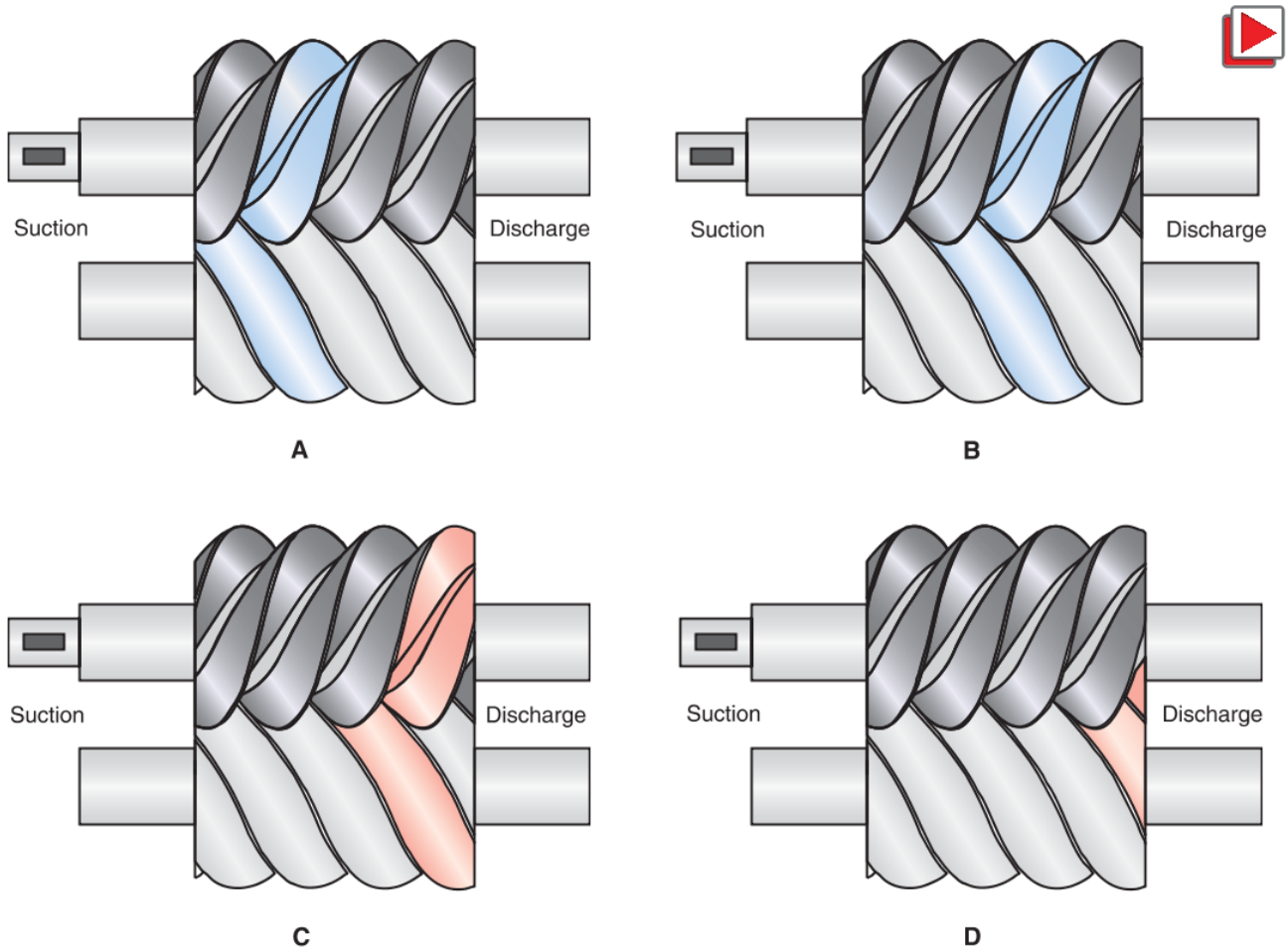

Goodheart-Willcox Publisher

Figure 18-34. In a screw compressor, the revolving rotors compress the refrigerant vapor. A—Interlobe spaces being filled. B—Beginning of compression. C—Full compression of trapped vapor. D—Compressed vapor discharged from interlobe spaces.

Screw Compressor Design Variations

Screw compressors are often used in large-capacity systems ranging from 20 to 300 tons. Open-drive screw compressors, like the one shown in **Figure 18-36**, are most often used with ammonia and other high-pressure applications, such as chillers. Hermetic screw compressors, like the one shown in **Figure 18-37**, are used with halocarbon refrigerants.

Many screw compressors operate with oil injection. The oil seals the clearance between the rotors and the cylinder to prevent refrigerant leakage. It also helps cool the compressor. The efficiency of these compressors is quite high.

One type of screw compressor uses one main rotor, rather than two. This type of compressor is called a single screw compressor. In a single screw compressor, the main rotor meshes with two star-shaped rotors, which are driven by the main rotor. The basic operating principles of a single screw compressor are the same as those of other screw compressors.

18.2.5 Centrifugal Compressors

A ***centrifugal compressor*** is compressor consisting of a rotor-operated impeller with radial blades inside a volute casing. As the rotor spins, it flings refrigerant vapor outward, where it compresses against the volute casing. Centrifugal compressors are designed for use with large-capacity systems ranging in size from 50 to 5,000 tons.

In this type of compressor, the vapor is fed into a casing (stator) near the center of the compressor. The ***impeller*** is a disk with radial blades that spins rapidly in this casing. The vapor is flung outward in the casing, piling on top of the vapor ahead of it, causing slight compression. See **Figure 18-38**.

Copyright Goodheart-Willcox Co., Inc.

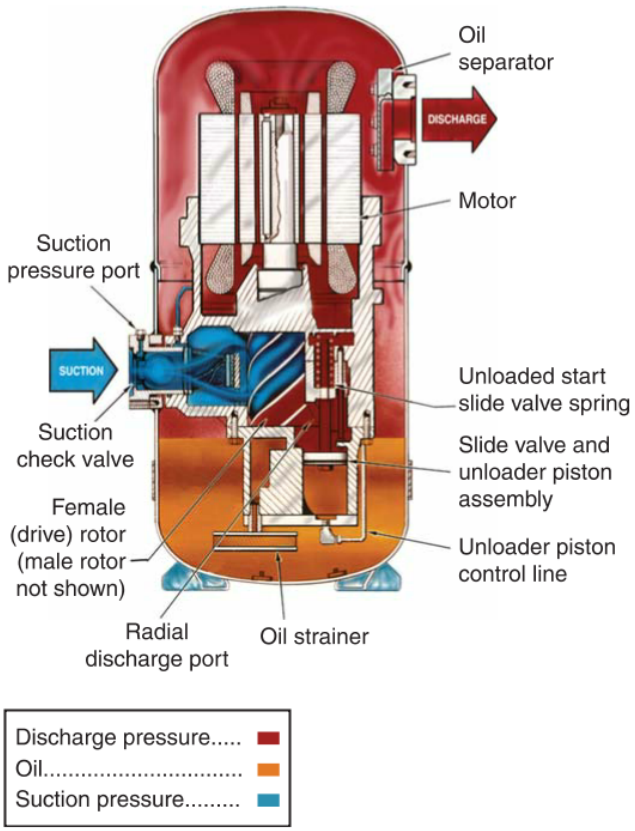

Hartford Compressors, Inc.

Figure 18-35. In this hermetic screw compressor, the unloader system repositions the discharge port to adjust compressor capacity.

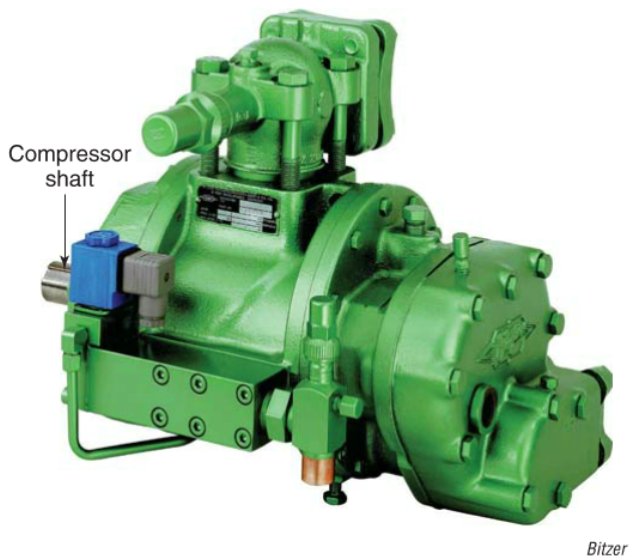

Bitzer

Figure 18-36. An open-drive screw compressor.

Bitzer

Figure 18-37. A compact hermetic screw compressor.

The force that throws the vapor outward is called ***centrifugal force***. Because the compressors rely on centrifugal force to compress the refrigerant, their efficiency increases with speed. Therefore, the compressors are designed to operate at high speeds. The pressure gained is small, so multiple impellers may be used in series. This creates greater pressure difference and pumps a sufficient volume of vapor.

Construction

The centrifugal compressor has the advantage of simplicity. There are no valves or pistons and cylinders. The only wearing parts are the main bearings. The ***stator*** of a centrifugal compressor is the casing in which the impeller rotates. The stator may be bolted to the compressor housing, as shown in **Figure 18-39**, or it may be an integral part of the housing.

The stator is a ***volute*** design, meaning that it is spiral shaped. In **Figure 18-39**, it can be clearly seen that the stator (10) is wider and taller at the top of the

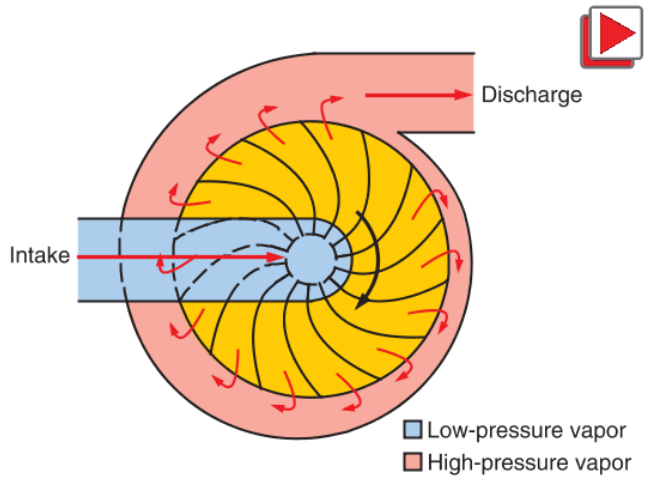

Goodheart-Willcox Publisher

Figure 18-38. A simplified centrifugal compressor diagram.

Copyright Goodheart-Willcox Co., Inc.

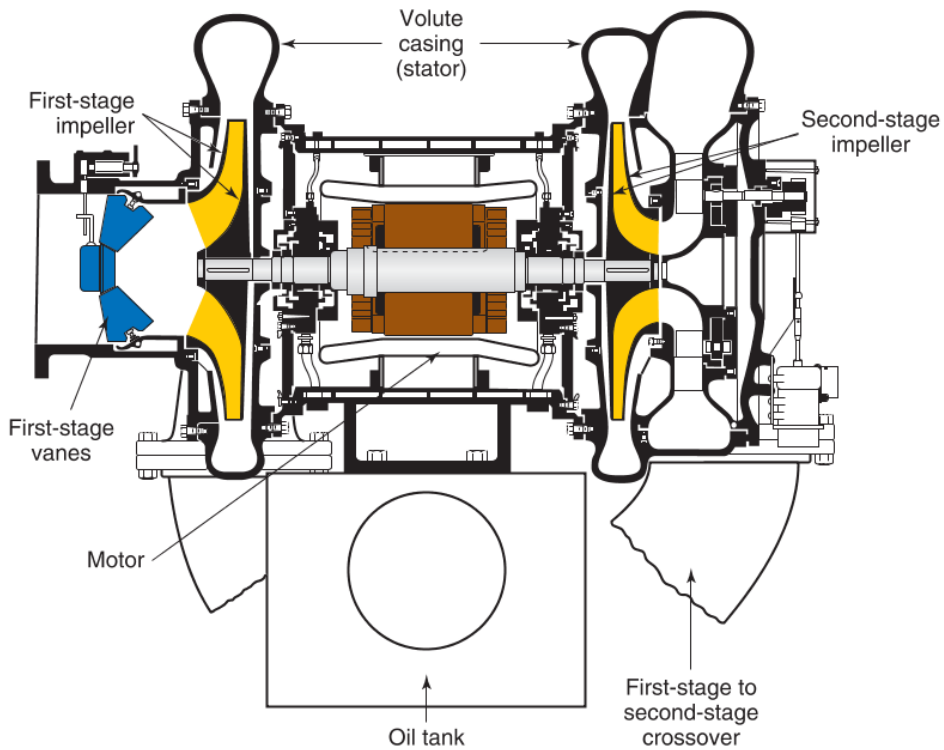

Goodheart-Willcox Publisher

Figure 18-39. A cross-section of a typical two-stage centrifugal compressor. Note that the discharge opening is not shown.

compressor than at the bottom. In fact, the width and height of the casing gradually changes along the entire length of its perimeter.

The casing (stator) also holds the main bearings, oil pressure pump, and the vapor intake and exhaust ports. When an external motor is used, the casing also holds the shaft seal where the shaft extends out for the power drive. Both the first stage and second stage of the compressor have adjustable vanes on the inlet to regulate the amount of refrigerant vapor flowing into the impeller. This allows the capacity of the pump to be adjusted as needed.

The impeller in a centrifugal compressor is keyed to the compressor shaft. It is made of cast iron or steel. It is specially designed to move the vapors without going above gas velocity limits. It is designed so there will be no vapor-trapping pockets.

Thinking Green

Magnetic Bearings

In some centrifugal compressors, the impellers ride on magnetic bearings. The magnetic bearings are energized when the compressor starts, causing the impeller shaft to levitate within a magnetic field. Since the shaft does not make physical contact with the bearing as it spins, friction and heat are greatly reduced. As a result, more of the compressor motor's power is used to perform useful work, resulting in improved efficiency.

18.3 General Compressor Components and Systems

In addition to motors, which have already been explained, there are a number of other components and systems commonly built in or attached to compressor units. The following sections will describe those components and explain their functions.

18.3.1 Service Valves

Most open-drive compressors and some hermetic compressors have service valves, which allow service technicians to attach gauges, add refrigerant or oil, or isolate the compressor from the rest of the system, **Figure 18-40**.

Many small hermetic systems do not have service valves of any type. To attach gauges and service manifolds to these types of systems, refrigerant lines must be tapped. Special tapping valves are available. These

Copyright Goodheart-Willcox Co., Inc.

Mueller Industries, Inc.

Figure 18-40. Different compressor service valves.

are clamped to a tube so that the valves pierce the tube. Once clamped to the tube, these valves provide the necessary gauge and service connections, **Figure 18-41**.

18.3.2 Mufflers

Most hermetic compressors and many open-drive compressors use ***mufflers*** to reduce noise that may be caused by gas pulsation. Mufflers are constructed of brazed cylinders with baffle plates mounted inside. A muffler allows the gas to expand in the muffler chambers, smoothing out its flow. It reduces the sharp gasping sound on the intake stroke and the even-sharper puff of the exhaust. Mufflers may be located on both the intake (suction) and the exhaust (discharge) openings of a compressor. Mufflers are installed near the compressor, usually vertically, to provide efficient oil movement and to trap any refrigerant that may condense during the Off cycle, **Figure 18-42**.

18.3.3 Compressor Cooling Systems

The temperature of the compressor is greatly affected by the heat of compression. As vapor is "squeezed" and forced into the condenser, the vapor temperature rises. Friction (rubbing) between moving parts also adds to compressor temperature. The heat must be removed to prevent loss of efficiency and to maintain the lubricating qualities of the oil in the compressor.

The oil that circulates in the compressor removes much of the heat from the compressor and also from the motor in hermetic units. Motors are often cooled by passing the suction vapors and return oil over the windings. As the oil flows over the hot surfaces, it picks up excess heat and carries it to cooler surfaces. Some units circulate the crankcase oil through an air-cooled coil. The cooled oil then helps to cool the compressor.

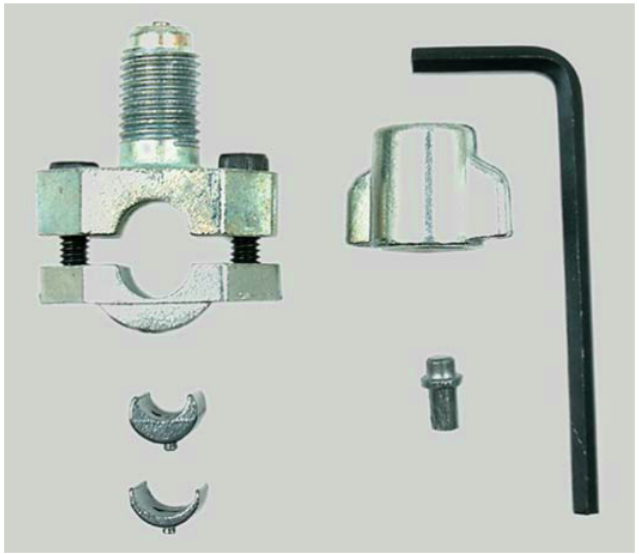

DiversiTech Corporation

Figure 18-41. Piercing valves for accessing systems having no service valves.

Emerson Climate Technology

Figure 18-42. This muffler is designed for use on discharge lines.

Copyright Goodheart-Willcox Co., Inc.

Some larger hermetic units are water-cooled. If the system is equipped with a water-cooled condenser, the same water is often used to cool the compressor or dome. Many compressors have metal fins on their exterior surfaces. These fins increase the surface area of the housing, allowing more heat to dissipate. Some units even use a motor-driven fan to force cooling air over the compressor, **Figure 18-43**.

18.3.4 Lubrication Systems

Lubricating oils have been developed especially for reciprocating and rotary refrigeration compressors. Usually, these are mineral oils, which are completely dehydrated, wax-free, and non-foaming. They have a viscosity that is best for the refrigerant and for the refrigeration temperatures. *Viscosity* is a fluid's resistance to flowing. A refrigeration lubricant's viscosity rating indicates its ability to flow at given temperatures. Some refrigeration oil contains additives to improve lubricating qualities. The additives may also improve the oil's viscosity properties.

Reciprocating compressors may be lubricated either by a splash or a pressure (force-feed) system. In the ***splash system***, the crankcase is filled with the correct oil up to the bottom of the main bearings or to the middle of the crankshaft main bearings so that the oil level covers half of the main bearings. At each crankshaft revolution, the crank throw or the eccentric dips into the oil. It splashes the oil around the inside of the compressor. Oil is thrown onto cylinder walls and piston pin bushings. It is also thrown into small openings where it can drain into the main bearings. This is an excellent system for normal use in small compressors.

Some compressor connecting rods have little dips or scoops attached to the lower ends. These scoop up small amounts of oil and sling it around to other parts. Clearances between the moving parts in this type of system must be less than in pressure systems. Bearing noise will occur at smaller clearances than with a pressure system. This is because there is no oil under pressure to cushion the bearing surface.

Bitzer

Figure 18-43. These compressors are equipped with their own cooling fans.

Pressure lubrication systems use a small oil pump to force oil to the main bearings, lower connecting rod bearings, and sometimes piston pins. It is a more expensive system since a pump is required. Also, the crankshaft and connecting rod must have oil passages drilled in them, **Figure 18-44**.

Since the oil pump delivers oil, under pressure, to all bearing surfaces, a pressure lubrication system provides better protection than a splash lubrication system. A compressor with a pressure lubrication system will also run quieter, even though it has greater bearing clearances.

In a rotary compressor, a constant film of oil is needed on the cylinder, roller, and blade surfaces. The cylinder is located so the oil level half covers the main bearings. When the compressor operates, the oil feeds through the main bearings into the cylinder. Some systems use a force-feed lubrication system. Pumping action for the lubrication system may be provided by a separate oil pump or by the pumping action of the blades moving in and out of their slots.

A compressor's oil pump is usually mounted on one end of the compressor shaft, **Figure 18-45**. An overload relief valve must be built into the pump. This will protect the pump and the rest of the system against oil pressures that are too high. Larger, pressure-lubricated compressors sometimes use pressure-controlled electric switches. These switches will stop the unit if the oil pressure drops too low.

18.3.5 Unloaders

To make it easier to start a compressor, some units include an unloader. An ***unloader*** is a mechanism that temporarily reduces the pressure in the compressor during start-up. The method an unloader uses to reduce pressure varies depending on the compressor design. In addition to lowering pressures during start-up, an unloader may also be used to vary the pumping capacity in certain compressors. This is useful when there is a changing heat load, such as in an air conditioner. An unloader may be operated mechanically, electrically, or hydraulically.

Internal unloaders are usually operated by oil pressure. Solenoid valves are mounted in the oil lines leading to the unloaders. When the solenoid is closed, oil pressure drops in the unloader. This allows the spring in the unloader to expand, holding a compressor's cylinder intake valve open. When oil pressure

Copyright Goodheart-Willcox Co., Inc.

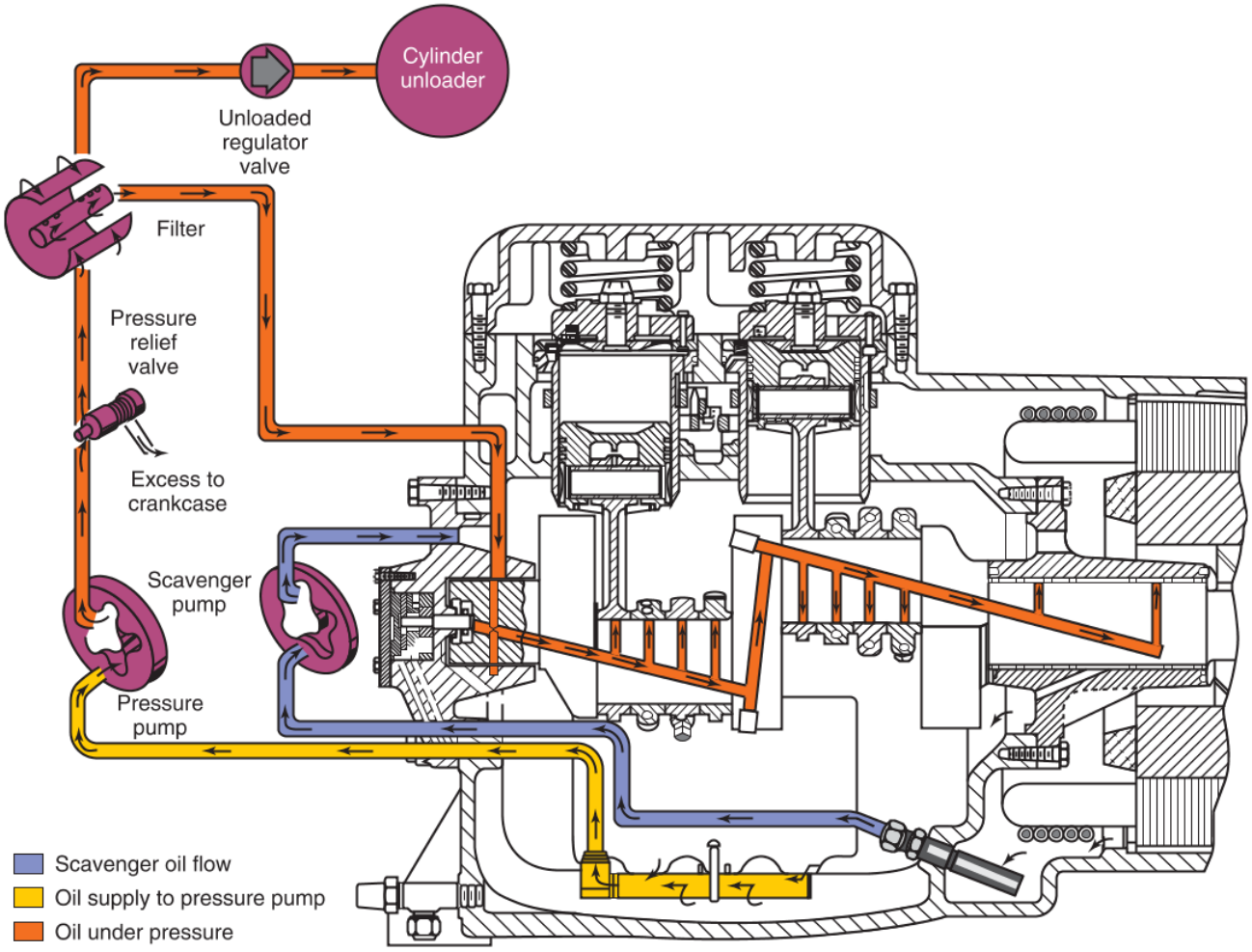

Goodheart-Willcox Publisher

Figure 18-44. The lubrication system in a pressure-lubricated, hermetic, multi-cylinder, reciprocating compressor. The scavenger pump returns oil from the motor end of the compressor back to the lower portion of the crankcase at the cylinder, which serves as an oil sump to store the oil charge. Note the pressure relief valve in the pressure line. The cylinder unloader is operated by oil pressure.

CMP Corporation

Figure 18-45. An oil pump with gaskets and assembly for a reciprocating compressor.

reaches the desired level, the spring in the unloader is compressed, and the valve is able to operate normally, **Figure 18-46**.

When the intake valve is held open, refrigerant pressure is unable to build. This technique is used to decrease load during start-up. It is also used to reduce pumping capacity during periods of low-load demand.

Low-side pressure switches operate the solenoids. A timer bypass pressure switch operates the system at full capacity for about a minute each hour or two. External unloaders use a bypass line connected to the evaporator inlet, ensuring suction vapor is cool (de-superheating).

In small systems using a capillary tube refrigerant control, the pressures balance when the compressor is off. This balancing of the low-side and high-side

Copyright Goodheart-Willcox Co., Inc.

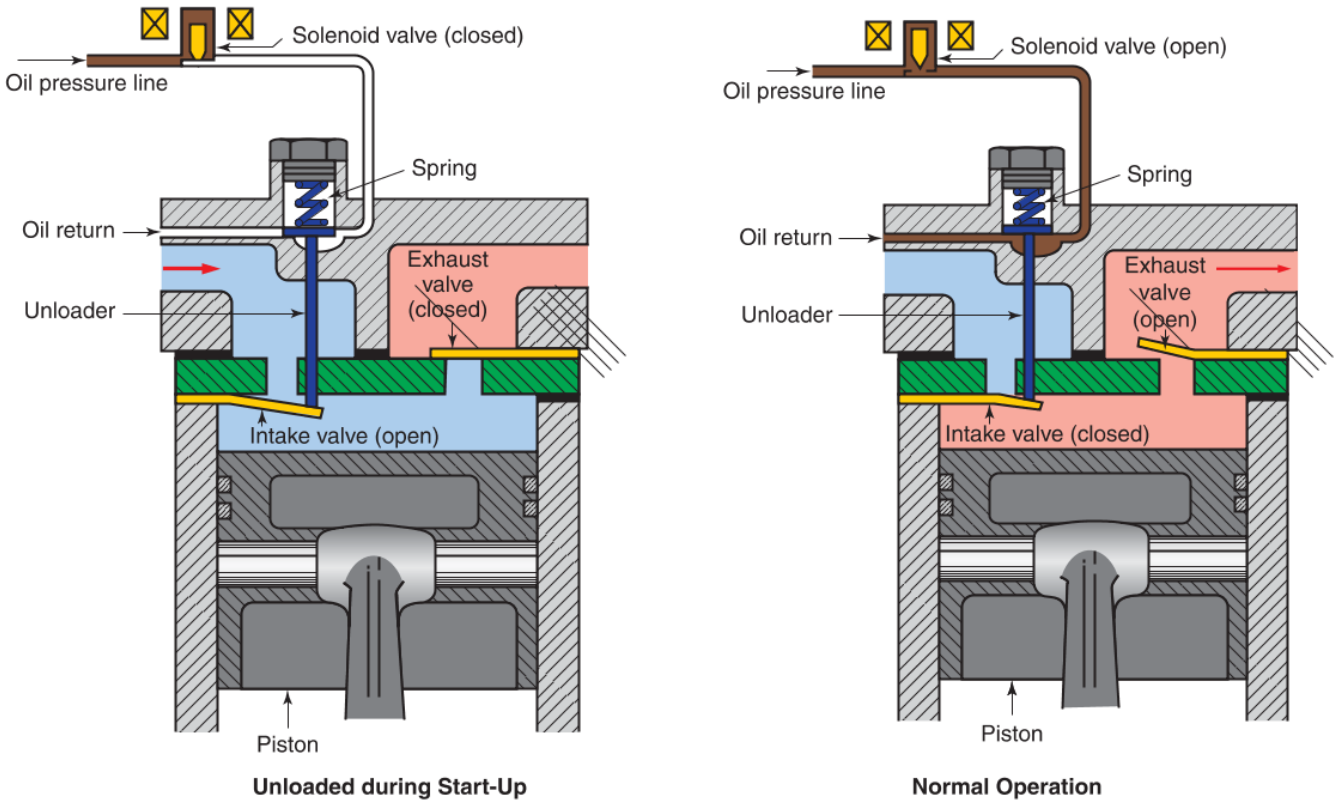

Goodheart-Willcox Publisher

Figure 18-46. Cutaway compressor's internal unloader. Unloaded during Start-Up—To lighten the load on the motor, reduce a compressor's pumping capacity. The solenoid valve closes, which lowers oil pressure beneath the unloader spring. The unloader spring expands, holding the intake valve open. This prevents compression of the refrigerant, making start-up easier. Normal Operation—The solenoid valve is open, so that oil pressure keeps the unloader spring compressed. This allows the intake valve to operate normally.

pressures serves the same purpose as an unloader. Therefore, an unloader is not required for systems that balance pressures during the Off cycle.

Some large compressors have either hydraulic or electric unloading devices to control the number of cylinders pumping. Typically, the intake valves are held open to disable the pumping action of unneeded cylinders. The higher the load, the more cylinders used to pump the vapor. At full load, all cylinders are used to pump refrigerant. As the load decreases, cylinders are bypassed so they are no longer pumping refrigerant. **Figure 18-47** shows two unloader control systems.

18.3.6 Sealing Devices

Sealing devices are used throughout the compressor wherever a gap between components could allow refrigerant or pressure to escape. Sealing devices are commonly located between mating parts of the compressor case, between cylinder heads and crankcases, and between shafts and housings. The following sections describe two common types of sealing devices: gaskets and O-rings. Shaft seals, which were described earlier in this chapter, are another common type of sealing device.

Gaskets

On open-drive and semi-hermetic compressors, mating surfaces of the cases are usually sealed with gaskets. Gaskets prevent pressure, refrigerant, and lubricant from leaking out of the compressor. They are needed between bolted parts, such as cylinder heads, valve plates, and crankcase openings. Gaskets may be made of special paper, synthetic material, or lead. Some are made of a plastic substance. Gaskets must be completely free from moisture before use, **Figure 18-48**.

O-Rings

O-rings are commonly used as sealing devices, especially where there may be some motion between the assembled parts. **Figure 18-49** illustrates three typical O-ring installations.

Copyright Goodheart-Willcox Co., Inc.

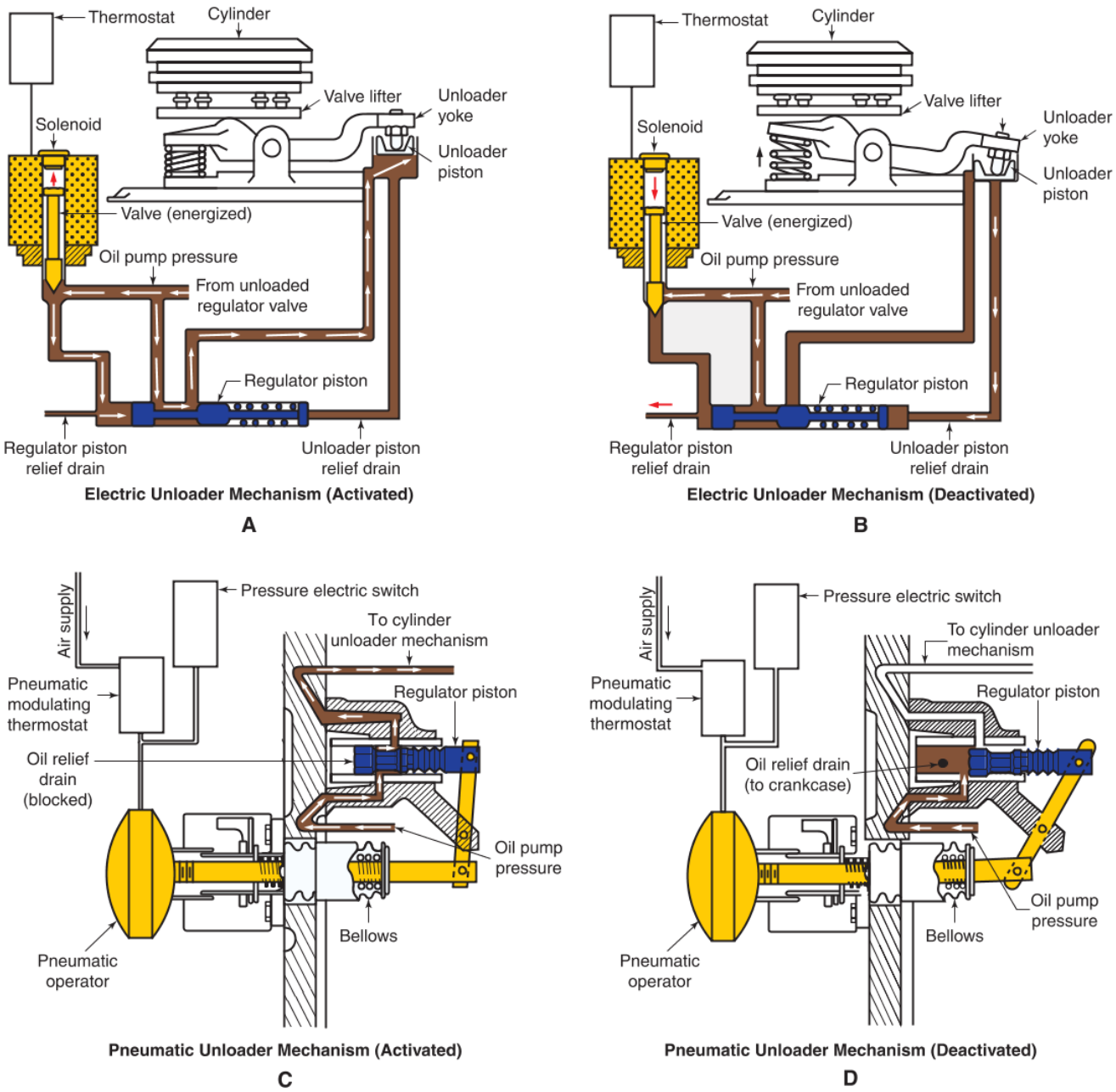

Goodheart-Willcox Publisher

Figure 18-47. Oil circuits operating compressor unloaders may be controlled electrically or pneumatically. A—When an electrical unloader control is activated, oil pressure moves the regulator piston to create an open passage between the oil pump and the unloader piston. B—When an electrical unloader control is deactivated, pressure against the regulator piston is blocked, allowing the spring to shift back the piston and block oil pressure to the unloader piston. C—When a pneumatic unloader control is activated, air pressure pushes the bottom linkage outward, which pushes the upper linkage and regulator piston inward. This opens a passage between the oil pump and the unloader. D—When air pressure is reduced, the bottom linkage pulls back, which moves the upper linkage and regulator piston to move to block the passage to the unloader and opening the oil relief drain.

The materials used for O-rings depend on various factors, including temperature, pressure, fluids to be controlled, and useful life required. O-rings are usually made of fluid-resistant elastomer compounds.

18.3.7 Crankcase Heaters

Many compressors are equipped with some type of protective device. During the Off cycle, refrigerant

Copyright Goodheart-Willcox Co., Inc.

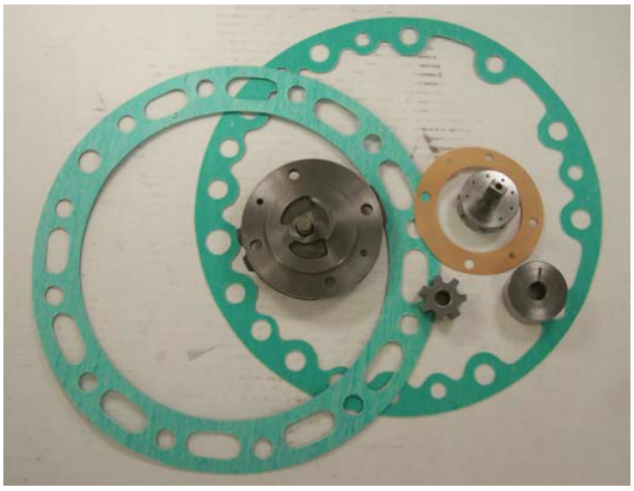

CMP Corporation

Figure 18-48. Gaskets with a compressor oil pump package.

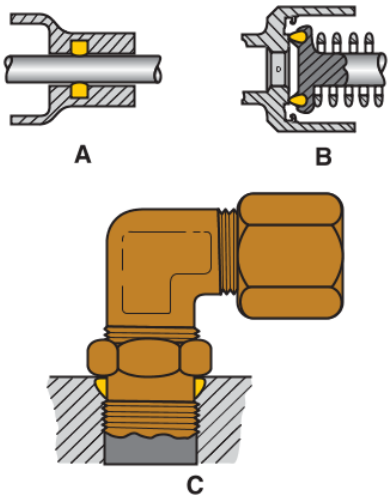

Goodheart-Willcox Publisher

Figure 18-49. Some typical O-ring installations (shown in yellow). A—An O-ring installed as seal between a shaft and its housing. B—An O-ring installed to serve as a seat seal. C—An O-ring installed as a pipe fitting assembly seal.

will migrate to the coolest part of the system. Often, this is the compressor. A ***crankcase heater*** is a device that warms the compressor crankcase to evaporate any liquid refrigerant trapped in the oil. In some compressors, the discharge line is coiled in the crankcase. The heat given off from the discharge line evaporates any liquid refrigerant in the oil.

Many large compressors for commercial applications are manufactured with a built-in crankcase heater. This is especially true if the compressor may be exposed to cold temperatures (outdoor units). These heaters may be operated during the Off cycle or they may be thermostatically controlled. With the exception of heat pumps, smaller installations usually do not require a built-in crankcase heater. However, an accessory heater can be purchased and attached to the crankcase, **Figure 18-50**.

Crankcase heaters are required on compressors that operate in ambient temperatures lower than evaporator temperatures. If the refrigerant in the compressor is allowed to condense, the refrigerant/oil mixtures in the compressor will begin to foam when the compressor starts. This causes the oil charge to pump out of the compressor, a condition known as ***oil slugging***. Slugging of oil or liquid refrigerant can cause broken valves, damaged pistons, and broken head gaskets. Flooded starts occur when the compressor picks up refrigerant mixed with oil and feeds it to the cylinders and bearings. There may be severe damage as a result. A heating coil keeps the crankcase coil up to 30°F (17°C) warmer than system temperature. This ensures that the oil will be warm enough to mix with the refrigerant and prevent oil slugging.

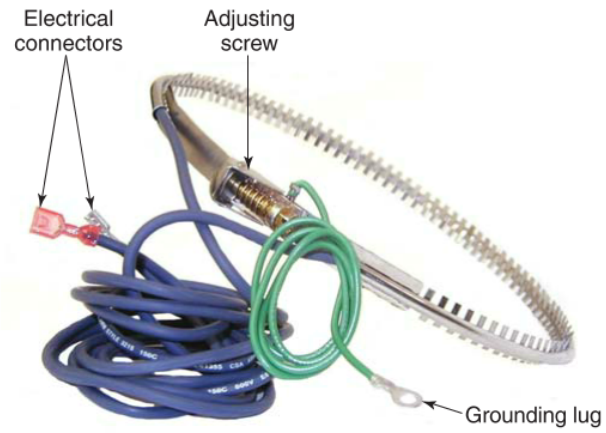

A

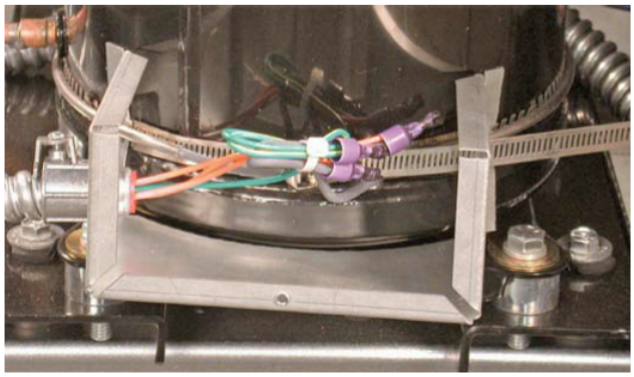

B

Tutco, Inc.; York International Corp.

Figure 18-50. Typical accessory crankcase heaters. A—The length of the heater can be changed by adjusting the worm (spirally threaded) screw. B—This crankcase heater is installed on a hermetic compressor.

Copyright Goodheart-Willcox Co., Inc.

Chapter Review

Summary

- Compressors are driven by an electric motor, which may be mounted outside the compressor unit or inside its housing. Compressors that are driven by an external source of mechanical power are called open-drive compressors, and compressors that include an integrated drive motor in a sealed unit are called hermetic compressors.
- There are two categories of hermetic compressors, fully hermetic and semi-hermetic. Fully hermetic compressors are housed in a welded dome and are not field serviceable. The casing of a semi-hermetic compressor is bolted together so the compressor can be serviced.
- There are five basic types of compressors used in refrigeration systems: reciprocating, rotary, scroll, screw, and centrifugal.
- A typical reciprocating compressor resembles an automotive engine, consisting of pistons attached to a rotating crankshaft by connecting rods. Eccentrics or offset journals on the crankshaft cause the pistons to move up and down in cylinders as the crankshaft rotates, compressing the refrigerant between the piston heads and the cylinder head.
- The Scotch yoke variation of a reciprocating compressor has a long piston with an elliptical slot in the lower piston skirt. The piston is connected directly to the crank throw, which slides back and forth in the slot as the crankshaft rotates and moves the piston up and down. This design eliminates the need for a connecting rod.
- The two types of rotary compressors are the rotating-vane and the stationary-blade compressors. In a rotating vane compressor, spring-loaded vanes expand and contract as the rotor turns, maintaining contact with the wall of the cylinder. Since the rotor is offset in the cylinder, the volume between the vanes gradually decreases as the rotor turns, compressing refrigerant trapped between the blades.
- In a stationary-blade rotary compressor, an eccentric rotor turns inside a cylinder and contacts the cylinder at a single point while a single fixed blade maintains contact with the rotor. As the rotor turns, the volume between the fixed blade and the rotor contact point increases for half a rotation, drawing refrigerant into the space, and then decreases for half a rotation, compressing the refrigerant.
- A scroll compressor consists of two intertwined scrolls. One scroll is fixed, and the other scroll orbits around the center of the fixed scroll. Pockets of refrigerant are captured between the scrolls and are compressed as the movable scroll orbits. The compressed refrigerant is discharged from the center of the scrolls.
- A typical screw compressor has a mated pair of helical rotors, one with lobes and the other with matching grooves. As the rotors rotate, refrigerant is drawn in and trapped between the lobes and grooves. As the rotors continue to rotate, the space containing the refrigerant is reduced, compressing the refrigerant.
- Centrifugal compressors consist of one or more impellers that rotate inside a volute stator. Refrigerant is flung outward against the stator as the impeller rotates. The refrigerant piles up on the refrigerant ahead of it, compressing it slightly.
- All compressor units, regardless of type, must have a motor to drive the compressor. They may also have service valves to allow a technician to attach gauges, add oil or refrigerant, or isolate the compressor from the rest of the system. Most compressors have check valves at various points to prevent refrigerant from flowing in the wrong direction. Some compressors have mufflers on the intake and discharge lines to quiet noise caused by gas pulsation.
- Because the temperature of a refrigerant gas increases as it is compressed, compressors must have a system for removing the excess heat. Heat may be removed by oil circulation, suction gas, cooling fins, forced air, or water cooling.
- In a reciprocating compressor, components may be lubricated by a splash system or by a pressure system. In a splash system, oil is flung around the inside of the compressor as the crankshaft rotates. In a pressure lubrication system, a small pump delivers oil to vital components.
- Many compressors use unloaders to reduce the load on the compressor during start-up or to modulate the compressor's capacity. Most unloaders use oil pressure to hold an intake valve open, preventing compression from occurring in those cylinders.

Copyright Goodheart-Willcox Co., Inc.

- Some form of crankcase heating is required on compressors that operate in low ambient temperature. A crankcase heater prevents trapped refrigerant from condensing in the oil. If the refrigerant is allowed to condense in the oil, foaming and oil slugging could occur.

Review Questions

Answer the following questions using the information in this chapter.

1. Which of the following best describes a direct-drive compressor?
   A. A compressor connected to a drive motor by a belt and pulley system.
   B. A compressor and drive motor sharing a single shaft and mounted together in a single housing.
   C. A compressor's crankshaft connected to a motor's drive shaft by a coupling.
   D. A compressor with no crankshaft because each piston is directly operated by a separate drive motor.
2. A(n) _____ connects the piston to the crankshaft in a reciprocating compressor.
   A. crank throw
   B. connecting rod
   C. eccentric
   D. piston pin
3. A reciprocating compressor that has a long piston with an elliptical slot in the bottom of the piston skirt and no connecting rod is referred to as a(n) _____.
   A. full-floating design
   B. elliptical design
   C. Scotch yoke design
   D. hermetic design
4. Which of the following statements regarding rotary compressors is *not* true?
   A. Rotary compressors have low volumetric efficiency.
   B. In some rotating vane compressors, the blades are pushed against the cylinder wall by centrifugal force alone.
   C. The blade on a stationary blade rotary compressor is mounted in the compressor housing rather than in the rotor.
   D. All of the above.
5. Which of the following is a trait of stationary-blade rotary compressors?
   A. The blade is mounted on the rotor.
   B. The blade is pulled into contact with the rotor by centrifugal force.
   C. The rotor is mounted on an eccentric shaft.
   D. All of the above.
6. Which of the following statements regarding scroll compressors is *not* true?
   A. Scroll compressors operate with continuous suction and discharge, resulting in very smooth compression cycle.
   B. In a scroll compressor, vapor is compressed by a series of pistons that travel in a spiral pattern through a fixed scroll.
   C. Compressed vapor is discharged from the center of the scroll.
   D. All of the above.
7. Which of the following best describes the compression action in a screw compressor?
   A. Two scrolls rotating in opposite orbits trap and compress vapor in pockets.
   B. A pair of helical rotors traps and compresses vapor between the lobes in one rotor and the grooves in the other rotor.
   C. A high-speed, reversing motor compresses vapor by pushing and pulling a screw-like piston in a helical cylinder.
   D. Two impellers draw vapor in through opposite ends of a cylinder, causing the vapor to compress in the center of the cylinder.
8. Which of the statements regarding centrifugal compressors is *not* true?
   A. As the speed of a centrifugal compressor increases, its efficiency decreases.
   B. Vapor is drawn from around the outside of the stator and compressed inward toward its centrally located discharge.
   C. Centrifugal compressors often have multiple impellers that operate in series.
   D. All of the above.

Copyright Goodheart-Willcox Co., Inc.

9. Which of the following is *not* an approved method of cooling compressors?
   A. Using cool suction vapor and oil to cool a compressor motor.
   B. Running water through water jackets around a compressor's cylinders.
   C. Blowing air across a compressor's exterior.
   D. Using a small relief valve to vent refrigerant to atmosphere for evaporative cooling around the crankcase.
10. The primary purpose of a crankcase heater is _____.
   A. to minimize changes in bearing tolerances due to thermal contraction
   B. to minimize the amount of liquid refrigerant in the compressor oil
   C. superheat suction vapor entering the compressor
   D. prevent oil from freezing in the crankcase

Copyright Goodheart-Willcox Co., Inc.

CHAPTER 19 Compressor Safety Components

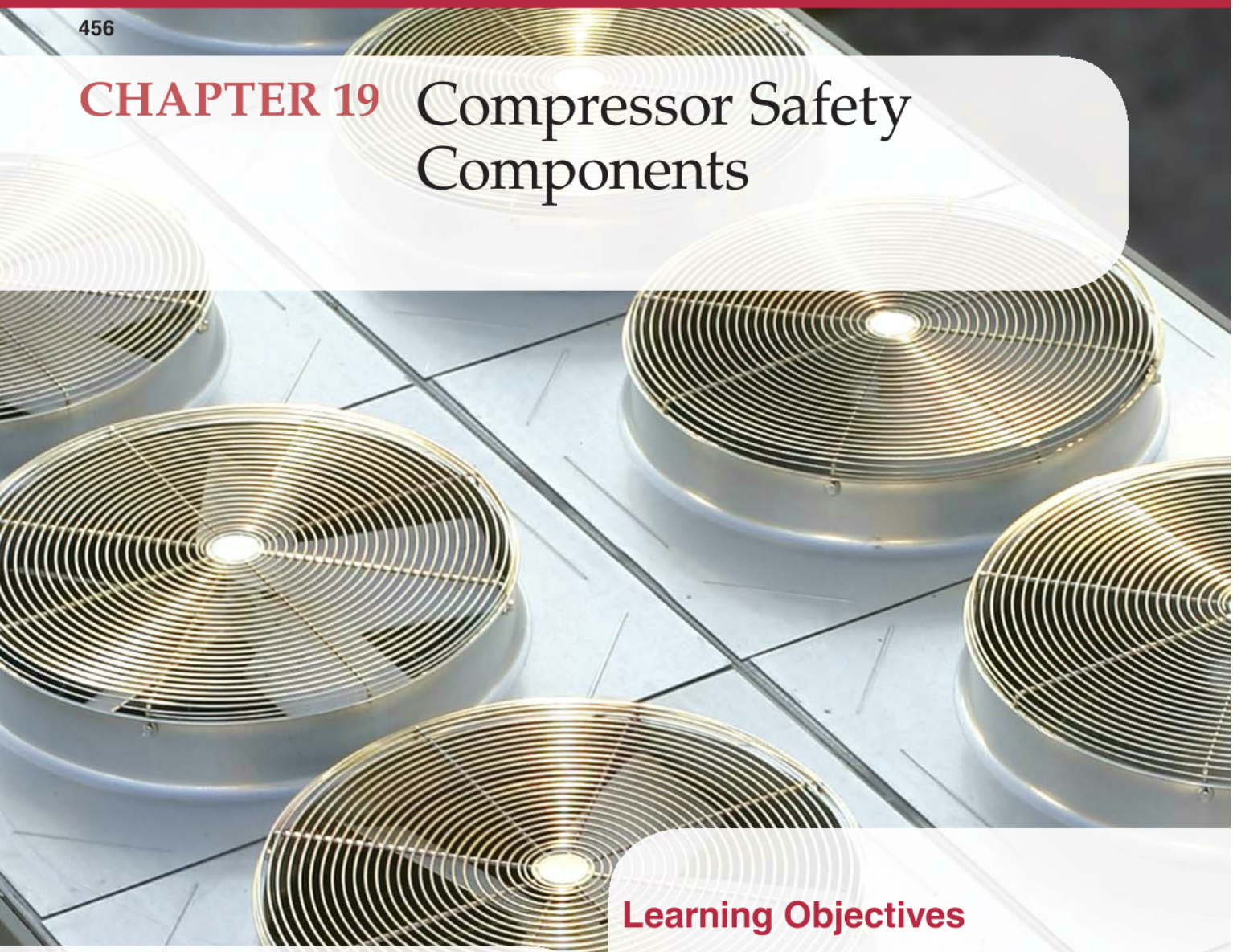

Learning Objectives

Information in this chapter will enable you to:

- Explain ideal compressor operating conditions and requirements.
- Describe the use and operation of compressor protection devices, such as overcurrent protection devices, overload devices, crankcase pressure regulators, discharge line pressure switches, and discharge line thermostats.
- Explain the role an accumulator plays in a system and how it accomplishes its purpose.
- Understand the components that maintain proper oil and refrigerant flow to the compressor.
- Explain the operation of oil separators, oil reservoirs, oil level regulators, and oil safety control.
- Summarize the purpose of vibration absorbers and the techniques for installing them.
- Explain the purpose and operation of crankcase heaters.

Chapter Outline

19.1 Compressor Operating Conditions
19.2 Compressor Protection Devices
19.2.1 Overcurrent Protection
19.2.2 Compressor Overload Devices
19.2.3 Crankcase Pressure Regulators (CPRs)
19.2.4 Discharge Line Pressure Switches
19.2.5 Discharge Line Thermostats
19.2.6 Accumulators
19.3 Oil Control Systems
19.3.1 Oil Separator
19.3.2 Oil Reservoir
19.3.3 Oil Level Regulator
19.3.4 Oil Safety Control
19.4 Vibration Absorbers
19.5 Crankcase Heaters

Technical Terms

crankcase pressure regulator (CPR)
discharge line pressure switch
discharge line thermostat
hot pull down
oil level regulator
oil reservoir
oil safety control
thermal overload
vibration absorber

Review of Key Concepts

Reviewing these concepts from earlier chapters will help you understand new concepts presented in this chapter:

- A compressor draws in low-pressure refrigerant vapor and compresses it into high-pressure refrigerant vapor. While operating, it reduces pressure on the low side and increases pressure on the high side. This compressor action makes mechanical refrigeration possible. (Chapter 18)
- Compressors are vapor compression pumps. They must be supplied with an intake of refrigerant vapor, not liquid. Liquid is generally noncompressible and could damage a compressor's mechanical parts if pumped. (Chapter 18)
- The higher the high-side pressure against which a compressor must pump, the harder it must work and the higher the electrical current its motor must draw. Overcurrent protection should be installed to protect all motors, including those used for compressors. (Chapter 13)
- Compressor operation is typically governed by multiple control components. These devices may react to temperature, pressure, or other variables for normal system operation or for safety. (Chapter 16)

Introduction

Of the four basic devices in any HVACR system (compressor, condenser, evaporator, and metering device), the compressor is the most expensive. It is important that compressors operate safely and are maintained to perform at peak efficiency for a long and useful operational life. A compressor should be applied within the manufacturer's recommended temperature and pressure conditions. Long-term operation also requires that the oil and refrigerant entering the compressor is clean and of the correct quality.

Video

- Vibration Absorbers

19.1 Compressor Operating Conditions

Compressors are mechanical devices that generate friction and heat from their moving parts. Therefore, all compressors require lubrication and cooling to operate efficiently and without sustaining damage. Refrigerant oil is used to lubricate the mechanical parts of the compressor, while refrigerant vapor is often used to cool the internal motor windings of hermetic and semi-hermetic compressors. The oil must be free from contamination, and the refrigerant must be in vapor form, not liquid. Contaminants in the refrigerant oil can damage the surfaces of pistons, scrolls, and screws in a compressor. Liquid refrigerant is noncompressible. If it enters the suction side of the compressor, it will result in *liquid slugging*. This can damage compressor valves, pistons, scrolls, and vanes.

Compressors can be small or very large and applied in various types of systems. They are available in fractional horsepower and used in domestic refrigerators, as high-capacity scroll compressors installed in building air-conditioning systems, as screw compressors used in conjunction with cooling towers, and many other systems. Regardless of the application, all mechanical compressors require two basic elements:

- Clean oil for lubrication.
- Liquid-free vapor refrigerant for cooling.

All compressors also use safety devices to ensure that they do not run during periods of excessive heat or pressure. Safety devices, such as internal overloads, external overloads, and pressure switches, are used to stop compressor operation in the event of high pressure or high temperature.

The shutdown of a compressor by safety devices is intended to prevent a potential compressor failure. If a compressor does not have sufficient lubrication or cooling, the internal parts will eventually overheat. If the compressor is permitted to run when starved of oil or refrigerant vapor, there will be unlubricated metal-to-metal contact with the pistons, scrolls, vanes, and valves. This unlubricated metal-to-metal contact could eventually create small metal chips in the refrigerant loop that further damage various internal components. Insufficient cooling can also cause motor windings to overheat. Overheating of motor windings may result in burnt or shorted windings and eventual motor failure within the compressor. There are many devices that are either supplied with the compressor from the manufacturer or can be placed in the refrigerant circuit to safely provide a continuous flow of oil and clean, dry, liquid-free refrigerant vapor to the compressor.

19.2 Compressor Protection Devices

There are several variables that should be monitored to ensure that a compressor is operating safely. Compressor protection devices installed into an HVACR system can monitor these variables and react before unsafe conditions can cause damage to a compressor. Important variables that a device may monitor include the following:

- Current draw on the compressor's motor.
- Head pressure.
- Temperature of the compressor dome.
- Temperature of the discharge line.

19.2.1 Overcurrent Protection

Motors and other current-drawing electrical devices require overcurrent protection. High current can damage conductor insulation and lead to a short circuit or a ground fault (short to ground). Since compressors generally use motors to produce the torque needed for operation, most compressors require some form of overcurrent protection. This is generally provided by circuit breakers or fuses. If something occurs that causes a motor to draw an abnormally high current level, a circuit breaker or fuse opens the circuit to prevent potential damage. See **Figure 19-1**.

Goodheart-Willcox Publisher

Figure 19-1. This disconnect has three fuses for the three-phase circuit powering the compressor motors for a rooftop unit.

Copyright Goodheart-Willcox Co., Inc.

19.2.2 Compressor Overload Devices

Compressors may overheat due to internal problems, such as a lack of oil or shorted motor windings. They may also overheat due to system issues such as head pressure that is too high due to a blocked or dirty condenser. To prevent compressor damage from overheating, a ***thermal overload*** opens the power circuit to turn off the compressor, **Figure 19-2**.

A thermal overload is a type of compressor protection device that is mounted to the compressor shell near the compressor motor terminals. Many use a bimetal disc that snaps open and closed a set of electrical contacts based on temperature. They open when exposed to too much heat and then reset when the heat falls to an acceptable level. A thermal overload is wired in series with the common terminal of the compressor, **Figure 19-3**.

Pro Tip

Recurrent Trip Problem

A thermal overload reacts to the heat surrounding a compressor, not just the internal heat generated by the compressor. If a compressor is mounted in a closed off area subject to high ambient conditions, it may trip regularly due to poor air circulation around the compressor. Always make sure that there is proper cooling airflow around a compressor when its thermal overload has tripped.

Some compressors also have internal overloads located within the compressor. These are usually wired into the motor windings at the manufacturer. They are designed to open when excessive current is sensed or under extreme temperatures. Most internal overloads will reset after the conditions return to normal. Some compressors also contain a reset button mounted to the shell of the compressor. The reset button requires the HVACR service technician to manually reset the overload when it has tripped.

Sealed Unit Parts Co., Inc.

Figure 19-2. This thermal overload is mounted to the shell of a compressor. It is connected in series with the compressor's common wire and opens the circuit when it senses dangerously high temperature.

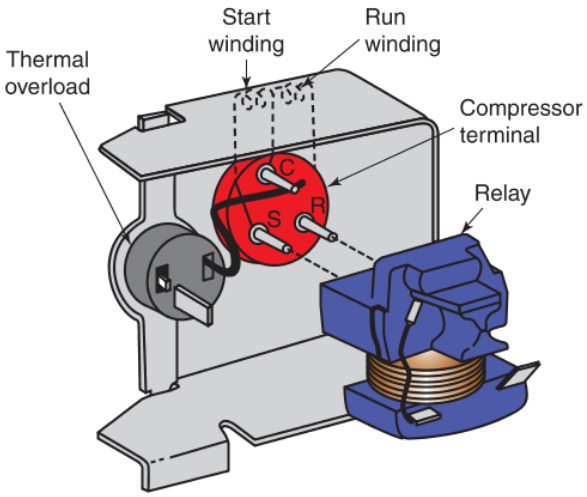

Frigidaire

Figure 19-3. Compressor overload mounted to the shell of the compressor.

Pro Tip

Compressor Protection Devices

Compressor protection devices are designed to protect the compressor from an internal failure or inefficient operation. They should be viewed as a sign to the HVACR service technician that something is wrong in the system, not just in the compressor. Never just replace an overload device or reset a tripped protection device. Always troubleshoot to determine the root cause that is forcing the protection device to trip off the system.

19.2.3 Crankcase Pressure Regulators (CPRs)

Starting a compressor places a heavy electrical load on its motor. It has to overcome inertia, as objects at rest tend to stay at rest. It must also overcome high crankcase pressure. In fact, crankcase pressure may be at its highest at starting. This requires the use of higher horsepower. Even so, compressor motors are usually taxed to the limit at the moment of starting. This is evident in measuring a compressor's high starting current or locked rotor amperage (LRA). Compressor starting is even more difficult when starting against above-normal head pressure.

Copyright Goodheart-Willcox Co., Inc.

If low-side pressure rises too high, the density of the vapor refrigerant increases. This increased pressure requires the compressor motor to draw more electrical current than normal. The higher the current and the longer a compressor motor conducts higher current, the more likely an overload will occur.

Higher than normal pressure in the suction line could occur after a defrost cycle or if evaporator temperature rises too high, such as after a long Off cycle or on an initial start-up from ambient temperature.

Caution

Hot Pull Down Pressure

An increased low-side and crankcase pressure condition occurs during start-up from ambient temperature. In a ***hot pull down***, the conditioned space temperature is being pulled down to normal operating temperature from much higher starting temperature (generally ambient temperature). A refrigeration system needs time for the compressor to remove the bulk of the heat load and drop temperature and pressure to normal levels.

On some systems, some form of low-side pressure control is used on a compressor to keep crankcase pressure at a reasonable level, even though the rest of the low-side pressure may be high. A ***crankcase pressure regulator (CPR)*** is a valve with an adjustable pressure setting that prevents crankcase pressure from exceeding a preset safe value. It throttles suction pressure above its setting to maintain a safe pressure level in the compressor crankcase, **Figure 19-4**. More information on crankcase pressure regulator operation can be found in Chapter 22, *Refrigerant Flow Components*.

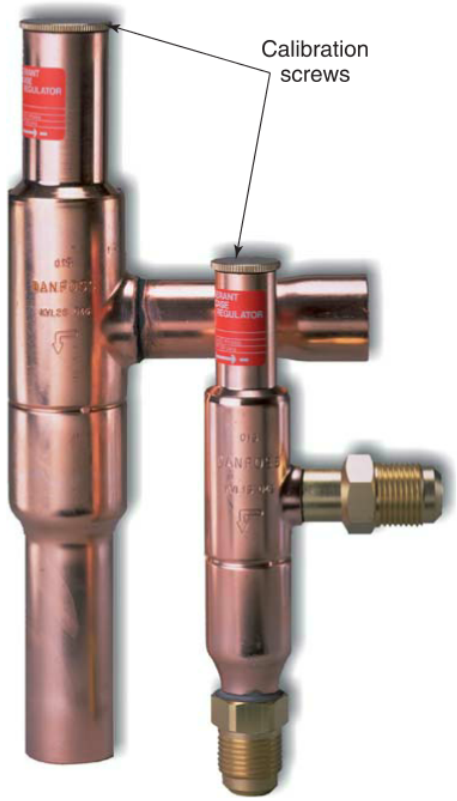

Danfoss

Figure 19-4. Crankcase pressure regulators are available in different sizes and designs for different applications.

19.2.4 Discharge Line Pressure Switches

High head pressure can cause problems for a compressor. A pressure switch is often installed in the compressor discharge line between the compressor and condenser. If the head pressure gets too high, the ***discharge line pressure switch*** shuts off the system. This pressure-responsive, normally closed switch opens a switch in the compressor control circuit to turn off the compressor, **Figure 19-5**.

Goodheart-Willcox Publisher

Figure 19-5. A discharge line pressure switch senses the head pressure in the discharge line and opens the compressor control circuit if the discharge pressure gets too high.

19.2.5 Discharge Line Thermostats

Another method of protecting the compressor against high discharge pressure is to use a discharge line thermostat. Gay-Lussac's law teaches that in a fixed volume (like the high side of a system), pressure and temperature rise and fall together. With that in mind, the high head pressure in the discharge line will cause it to have a very high temperature. A ***discharge line thermostat*** senses discharge line temperature and opens on a rise in temperature to turn off the system and protect the compressor from dangerously high temperature.

Copyright Goodheart-Willcox Co., Inc.

19.2.6 Accumulators

Many commercial refrigeration systems have an accumulator in the suction line. An accumulator consists of a tank with a reservoir on the bottom for liquid refrigerant and an inlet and outlet on top for the flow of vapor refrigerant. The inlet tube stops at the top of the tank. The outlet tube, however, stretches from the top of the tank down to the bottom of the reservoir and then back up near the top of the tank. This design ensures that only vapor refrigerant is drawn out of the accumulator and through the rest of the suction line into the compressor, **Figure 19-6**.

Refrigerant and a small amount of oil circulating through an evaporator and suction line enter an accumulator. Oil and any liquid refrigerant drop to the bottom of the accumulator, where they are held. Suction from the compressor draws vapor refrigerant near the top of the tank into the outlet tubing. The vapor refrigerant flows through the outlet tubing going downward and back up to the top of the tank before exiting into the suction line and toward the compressor. A small hole at the bottom of the tube, called an aspirator hole, helps to return oil to the compressor.

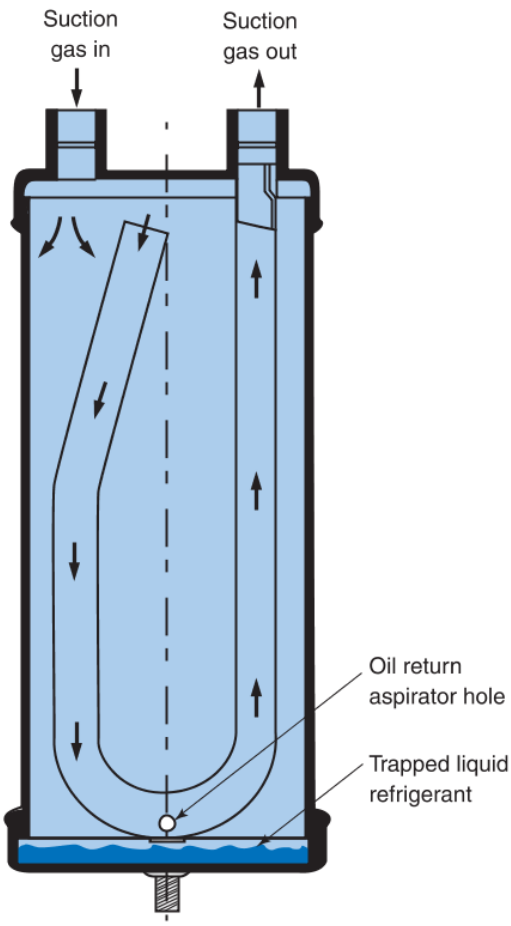

Virginia KMP Corp.

Figure 19-6. Inside view of an accumulator. Oil droplets mix with refrigerant vapor at the aspirator hole. Liquid refrigerant remains trapped until it can evaporate.

Caution

Low-Side Flooding

Though accumulators are designed to prevent liquid refrigerant from entering the compressor, massive flooding of liquid refrigerant into the low side of the system could also flood an accumulator and cause liquid slugging in a compressor.

Some accumulators have an additional inner coil of tubing running along the inside of the bottom of the tank. The inside of the coil is kept completely isolated from the inside of the accumulator. Only the outside of the coil is surrounded by the low-side refrigerant. The liquid line connects to this coil, allowing high-temperature, high-pressure liquid refrigerant to flow through the coil, **Figure 19-7**.

This liquid line coil provides two benefits to the system. Firstly, heat from the liquid line helps to vaporize any liquid refrigerant along the bottom of the accumulator. Secondly, by absorbing heat from the liquid line, liquid refrigerant in the accumulator helps to subcool the refrigerant in the liquid line before it enters the evaporator. In this way, accumulators with liquid line connections help improve system efficiency and protect the compressor.

Westermeyer Industries, Inc.

Figure 19-7. An accumulator with an inner coil for liquid line refrigerant has additional connections as shown. The larger connections are for the suction line, and the smaller connections are for the liquid line.

Copyright Goodheart-Willcox Co., Inc.

Caution

Insulated Accumulator

Be sure that both the accumulator and the suction lines connected to an accumulator are covered with insulation. This will prevent condensation from forming on the accumulator. If moisture is present on an accumulator for too long a time, rust could develop. Regularly inspect the areas of an accumulator that are likely to develop rust, such as along seams, at braze joints, and around tubing bends. A rusted accumulator should be replaced.

19.3 Oil Control Systems

Oil is used to lubricate a compressor's moving parts. However, a certain amount of this oil is pumped out of the compressor with the refrigerant vapor. It is important that this oil be returned to the compressor. Oil moving through the system could accumulate and cause operational problems and component damage, especially if not enough is available within the compressor.

Various devices throughout a refrigeration system are designed to collect and return the oil to the compressor. HVACR systems may use the following oil control devices: oil separator, oil reservoir, pressure differential valve, oil level regulator, and oil safety controls, **Figure 19-8**.

19.3.1 Oil Separator

Refrigeration systems work best when oil is kept at a proper level in the compressor. Oil is a thermal insulator. Therefore, any oil in the condenser and evaporator will reduce the system's heat transfer efficiency. This will result in excess energy consumption, as the compressor must run longer in order to achieve the desired evaporator temperature. It is especially important to keep the oil from circulating in low-temperature installations. Refrigerant oil thickens at low temperatures and becomes difficult to move out of the evaporator.

An oil separator is a system component that removes oil from high-pressure refrigerant vapor as both refrigerant and oil leave the compressor. Oil separators are placed in the discharge line between the compressor and the condenser, **Figure 19-9**.

The refrigerant-oil mixture pumped out of the compressor flows at high speed in the discharge line. The diameter of the oil separator is larger than the diameter of the discharge line. As a result, the flow slows down in the oil separator, which makes it easier to capture the oil aerosol droplets. This oil is captured as the flow passes through screens, baffles, filters, or certain piping arrangements within the oil separator. The heavy oil droplets fall and collect in the bottom of the oil separator, **Figure 19-10**.

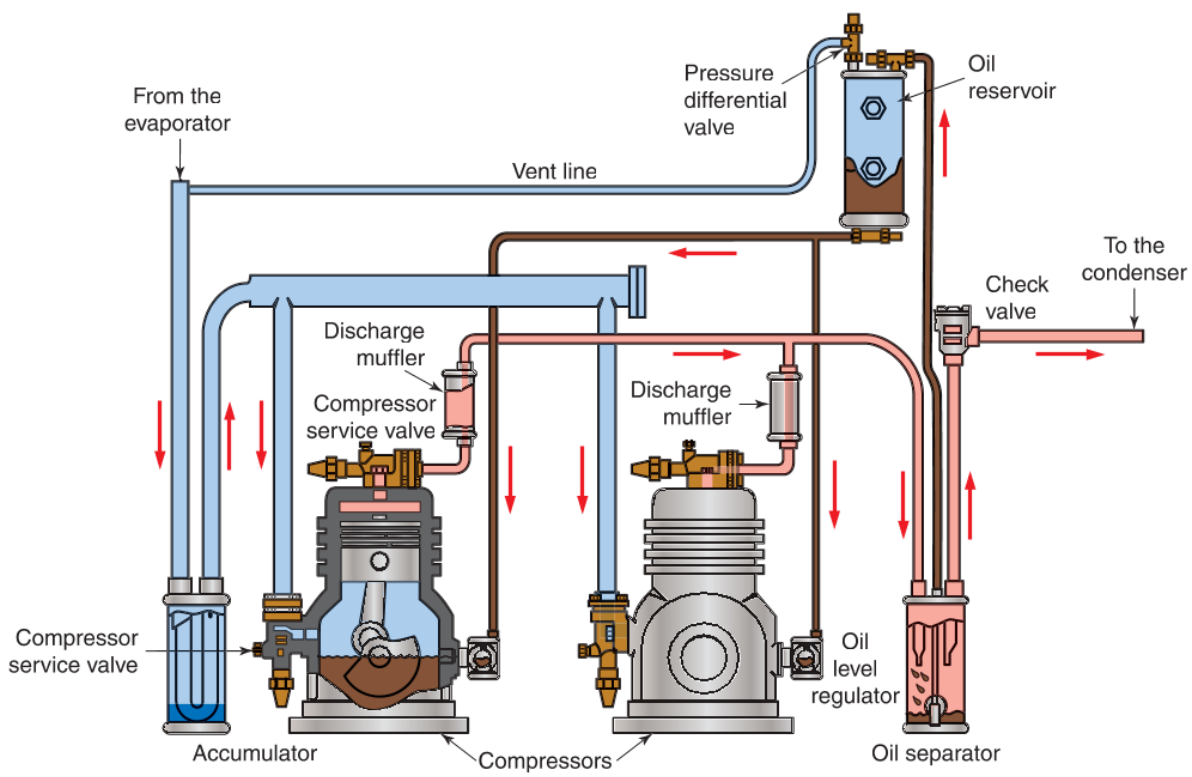

Goodheart-Willcox Publisher

Figure 19-8. This system diagram shows several of the oil control devices as they are arranged in a commercial refrigeration system.

Copyright Goodheart-Willcox Co., Inc.

Danfoss

Figure 19-9. Note the inlet, refrigerant outlet, oil outlet, and nameplate on this oil separator.

The rising oil level lifts a float that opens a needle valve to allow the oil to return to the compressor crankcase or suction line. In some installations, the oil will move into a separate oil reservoir before circulating into the compressor crankcase or suction line. On hermetic systems, the oil return line is usually connected to the suction line near the compressor.

Coalescing oil separators can remove 95–99% of the flowing oil. They use a filter made of highly pure glass fibers. The material forces the molecules to combine and form larger droplets that are then routed by gravity through a drain layer. A filter in the oil return line will help keep the oil clean. A filter may not be necessary if a coalescent oil separator is used.

Liquid refrigerant may collect in an oil separator during long Off cycles or during a long manual shutdown. The liquid refrigerant is heavier than oil, so the refrigerant will displace the oil in the bottom of the oil separator. An uninsulated oil separator may dispel enough heat to allow refrigerant vapor to condense into liquid. Oil separators are often insulated to prevent the condensing of vapor refrigerant. A temperature probe is located under the insulation of the shell of the oil separator to allow for accurate readings for monitoring oil separator temperature.

Another possibility is for liquid refrigerant in the condenser to migrate back into the oil separator during the Off cycle. This liquid refrigerant may return to the compressor through the oil return line by displacing the oil in the bottom of the oil separator. This could result in too much liquid refrigerant and oil collecting in the compressor, which may reduce oil lubrication, leading to damage or added stress on the compressor's moving parts. A check valve installed in the refrigerant outlet of an oil separator will stop liquid refrigerant from migrating backward through the system.

An alternative is to install a solenoid valve in the oil return line. This solenoid valve allows oil to return

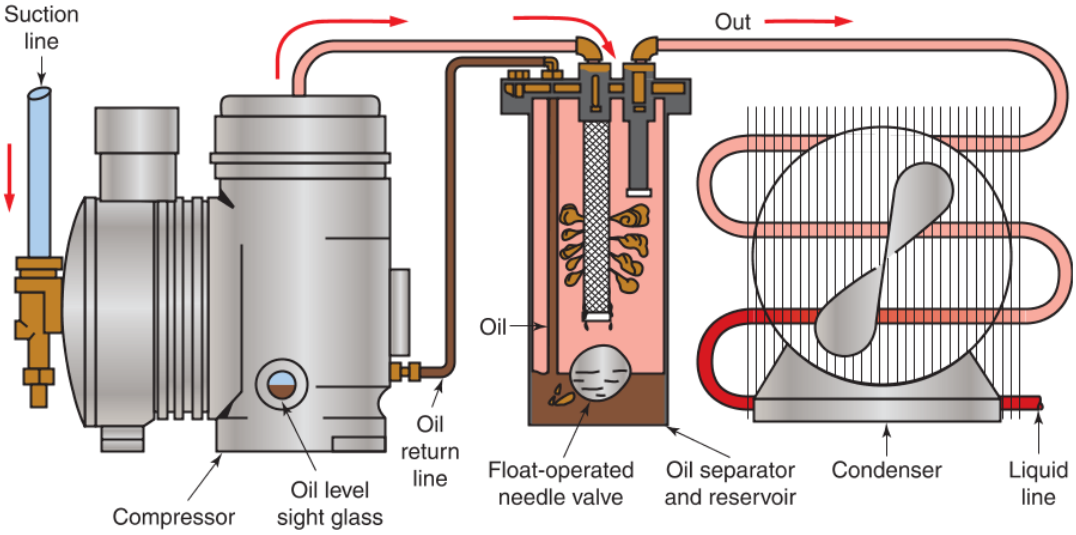

Goodheart-Willcox Publisher

Figure 19-10. In this oil separator installation, oil is removed from high-temperature, high-pressure vapor refrigerant. When the float valve opens, head pressure pushing down on the oil forces some of it through the return line and into the low-pressure crankcase.

Copyright Goodheart-Willcox Co., Inc.

to the crankcase during the On cycle. A thermostat is used to control the solenoid. The thermostat will close its contacts controlling the solenoid only when the oil separator is warm (100°F to 130°F [38°C to 54°C]). The thermostat de-energizes the solenoid to close during the Off cycle to prevent possible liquid migration that could cause a flooded start and slug the compressor.

A liquid line solenoid valve is recommended on field installed systems with a large refrigerant charge (over 3 lb of refrigerant per motor hp). One purpose of a liquid line solenoid valve is to prevent movement of liquid refrigerant into the evaporator through the metering device when the compressor is not in operation. This helps to minimize movement of liquid refrigerant from the high side into the low side. If enough liquid refrigerant were to migrate to the low side, it could make it into the crankcase and cause compressor slugging.

Figure 19-11 shows an oil separator used in large systems. It has a helical design in its top section. The refrigerant vapor-oil mixture enters the system at the inlet and flows downward along the spiral path of the helix. The centrifugal force of the vapor-oil flow forces the heavier substance (the oil) to move outward to the walls of the oil separator, where a screen layer is located. From there, the oil flows downward through a baffle and into a pool at the bottom. The screen layer serves a dual function, as both an oil separating and draining medium. The separated oil flows down the interior wall of the shell. This entire arrangement causes only a small pressure drop for the high-pressure refrigerant vapor. Up to 98% oil-free refrigerant exits the device. A float-operated oil return valve allows the oil to return to the crankcase or an oil reservoir.

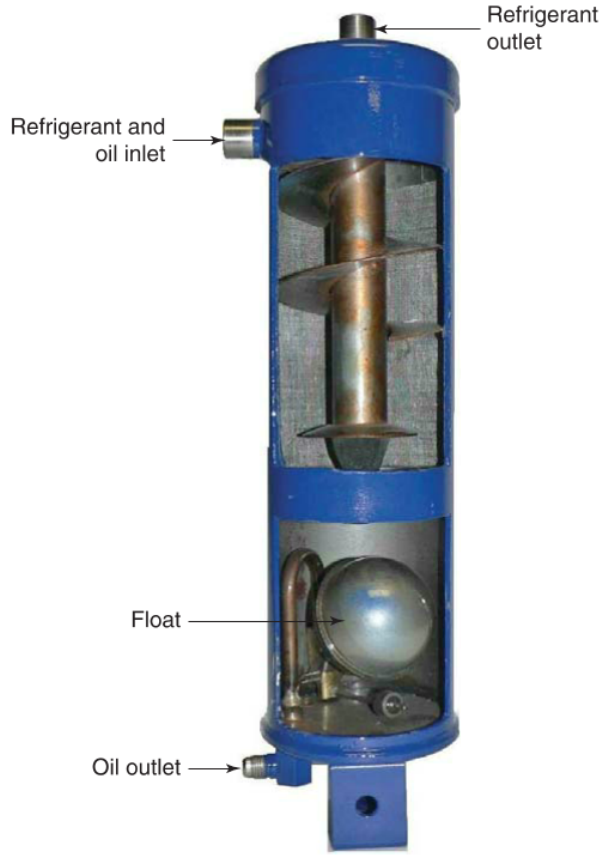

Henry Technologies, Inc.

Figure 19-11. In the helical oil separator, refrigerant and oil enter at the inlet, swirl in a circular motion, and separate due to centrifugal force and their weight difference. Refrigerant flows upward and out the refrigerant outlet, while the oil drops downward, accumulates in a pool, and exits at the oil outlet.

19.3.2 Oil Reservoir

An ***oil reservoir*** is a storage vessel that holds an oil supply for a compressor or a group of compressors in a refrigeration system. Oil trapped by the oil separator is returned to the oil reservoir until it is needed. The oil reservoir may contain sight glasses for observation of oil level, service valves, and a flare fitting for adding oil to the system, **Figure 19-12**.

19.3.3 Oil Level Regulator

An ***oil level regulator*** is an oil control device that regulates the level of oil within a compressor using a float mechanism. An oil level regulator is mounted on the outside of a compressor where it connects through the sight glass port. When its float drops due to the oil level being low, an oil level regulator opens to allow oil to flow from an oil reservoir, through the oil level regulator, and into the compressor. See **Figure 19-13**.

Oil level regulators are used when two or more compressors are piped in parallel. All compressors connected to the system must be level on the same horizontal plane. This ensures that each has the same level of oil. Oil level regulators are used in conjunction with oil separators and an oil return line to each compressor.

As compressors lose oil during operation, an oil separator traps the oil and returns it to an oil reservoir. As the oil level drops in each compressor, the oil regulator returns the oil back to each compressor, evenly maintaining the proper oil level in each compressor.

19.3.4 Oil Safety Control

All compressors require a certain amount of oil to operate properly. Insufficient oil can result in damage to compressors. To ensure that oil is returning to the compressor in large commercial installations, oil measurements are monitored by control devices. ***Oil safety control*** is a form of control that will shut off electrical power to the compressor if the net oil pressure or oil

Copyright Goodheart-Willcox Co., Inc.

Westermeyer Industries, Inc.

Figure 19-12. An oil reservoir holds standby oil as part of the oil control system. Note upper and lower sight glass ports, where the oil level can be observed.

Westermeyer Industries, Inc.

Figure 19-13. An oil level regulator controls the oil level in a compressor crankcase. A float-operated valve holds back the excess oil in a reservoir until the oil level in the compressor crankcase drops.

level drops below normal for a certain amount of time. Oil safety controls measure either differential pressure or oil level.

There may be times during regular operation when oil measurements drop below normal numbers. This often occurs during system startup. A time delay in the oil safety control requires this low oil measurement to last a certain amount of time before switching off the compressor. This time delay is intended to avoid nuisance shutdowns. If operation is normal, oil measurements should return to regular readings before the time delay has elapsed. In which case, the oil safety control will allow the system to continue operating. If low measurements persist, the oil safety control will turn off the compressor.

Some oil safety controls must be reset manually to resume normal system operation. If the controls on these systems were to reset automatically, the system could damage itself by cycling on and off repeatedly. Other oil safety controls reset automatically for a set number of times before locking out and requiring a manual reset. The importance of manual reset is that it prompts operators to have a technician inspect and diagnose the system. It is always best to find the cause of the system trip, instead of just resetting the controls.

In a mechanical oil safety control, differential oil pressure is monitored using a pair of bellows. One bellows responds to the low-side (crankcase) pressure, and the other responds to the oil pump pressure, **Figure 19-14**.

Oil pump pressure must be higher than the low-side pressure for oil to flow back into the compressor. This is because the oil pump is pushing oil against the low-side pressure that is in the compressor crankcase. The differential is calculated by subtracting low-side (crankcase) pressure from oil pump pressure to get the net oil pressure:

Oil pump pressure – Low-side (crankcase) pressure = Net oil pressure

If net oil pressure becomes too low for too long, the compressor is in danger of becoming damaged. Sustained low net oil pressure prompts a mechanical oil safety control to turn off the compressor.

Copyright Goodheart-Willcox Co., Inc.

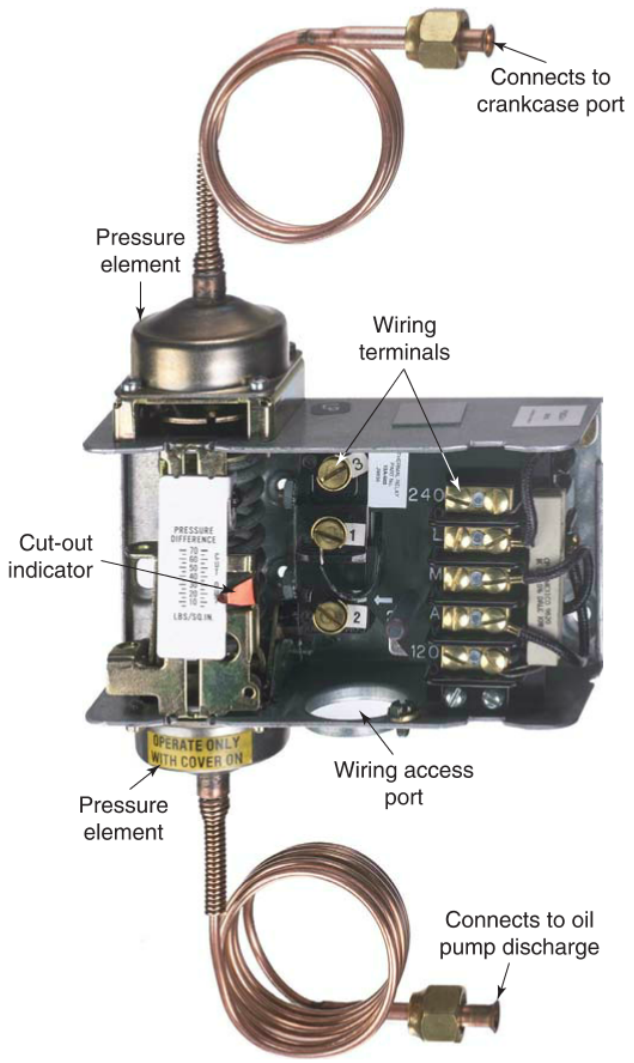

Johnson Controls, Inc.

Figure 19-14. Commercial system oil pressure safety controls operate on the difference between the low-side pressure and the oil pump pressure.

An electronic oil safety control monitors oil level, **Figure 19-15**. This monitoring may be done several different ways, such as using an optical eye or a Hall-effect sensor (a transducer that varies its output voltage in response to a magnetic field). Electronic oil safety controls often control multiple contacts that can be used to shut off the compressor when oil level is low and to sound an alarm.

19.4 Vibration Absorbers

A ***vibration absorber*** is a flexible line of tubing that carries refrigerant but also reduces or dampens any vibration or physical motion transmitted to it. To protect components on either side of the compressor, vibration absorbers should be installed in both the suction line and the discharge line as close to the compressor as possible. This reduces any compressor vibrations that might travel through the refrigerant lines and cause damage to various components or the lines themselves. Vibration absorbers are made of flexible, corrugated metal tubing with a braided wire covering. They may be constructed of brass or stainless steel with solid brass or copper fittings at each end, **Figure 19-16**.

Pro Tip

Vibration Absorber Terminology

Vibration absorbers may also be referred to as *vibration dampeners*, *vibration eliminators*, and other similar names.

Vibration absorbers should be installed in the horizontal position perpendicular to the direction of vibration. See **Figure 19-17A**. The end of the vibration absorber farthest from the vibration source should be secured to a wall or other sound structure. Securing the vibration absorber at one end prevents the vibrations from traveling beyond the absorber. If vibration

Emerson Climate Technologies

Figure 19-15. Electronic oil pressure safety control may have different options and functions, such as controlling the oil refill solenoid valve, sounding an oil level alarm, and locking out the compressor when there is insufficient oil.

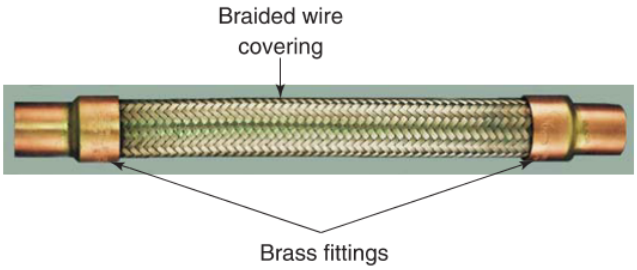

Courtesy of Sporlan Division - Parker Hannifin Corporation

Figure 19-16. Vibration absorbers are installed in the discharge and suction lines to prevent compressor vibrations from traveling through the lines.

Copyright Goodheart-Willcox Co., Inc.

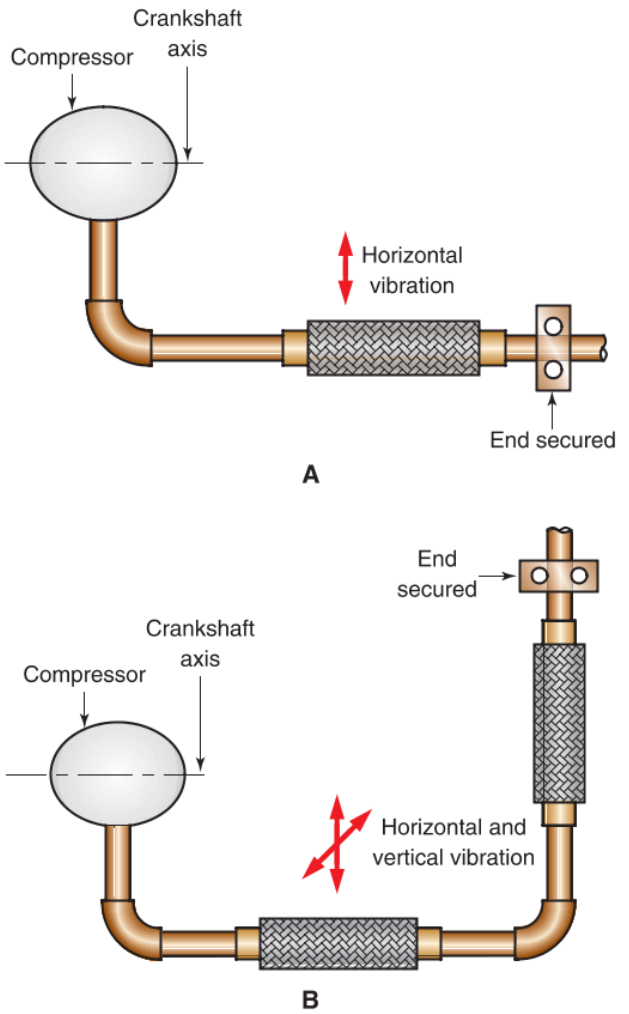

Goodheart-Willcox Publisher

Figure 19-17. Top views of recommended arrangements for vibration absorbers. A—For vibrations along a single axis, the vibration absorber should be installed in the horizontal position perpendicular to the direction of vibration. B—If vibrations occur along multiple axes, two vibration absorbers should be installed in the horizontal position at 90° to each other.

occurs in both the horizontal and vertical directions, two vibration absorbers should be installed at right angles to each other. See **Figure 19-17B**.

Pro Tip

Insulation for Low Temperatures

A vibration absorber should be insulated if it is installed in a suction line that is below 32°F (0°C). Proper insulation prevents condensation from forming and freezing beneath the braided wire covering. Any frost that forms between the corrugated tubing and the braided wire covering can damage the tubing, which can result in a leak.

Caution

Vibration Absorber Care

Do not stretch, compress, or twist a vibration absorber. Also, avoid overheating the fittings and braided covering during installation. Excessive heat can loosen brazed connections inside the vibration absorber, resulting in premature failure.

19.5 Crankcase Heaters

Like all components with moving parts, compressors can sustain damage in a variety of manners. During cold weather, compressors must be kept warm enough to prevent the dilution of the oil by liquid refrigerant. After a compressor has cycled off, there is the possibility that refrigerant vapor inside the compressor could condense if ambient temperature is low enough. This poses the danger of slugging. If a compressor pumps liquid (slugs), it could sustain damage that leads to premature failure and the need for replacement. To avoid this situation, many compressors are fitted with crankcase heaters.

A crankcase heater is an electric heating element on or in a compressor that produces heat to warm the compressor and prevent refrigerant inside the compressor from condensing into liquid, **Figure 19-18**.

Crankcase heaters may be thermostatically operated to energize the heating element at about 50°F (10°C). Systems with microprocessor controls manage compressor crankcase heaters automatically by initiating them when the temperature of the sensor (thermistor) is below a certain temperature. More information on crankcase heaters can be found in Chapter 18, *Compressors*.

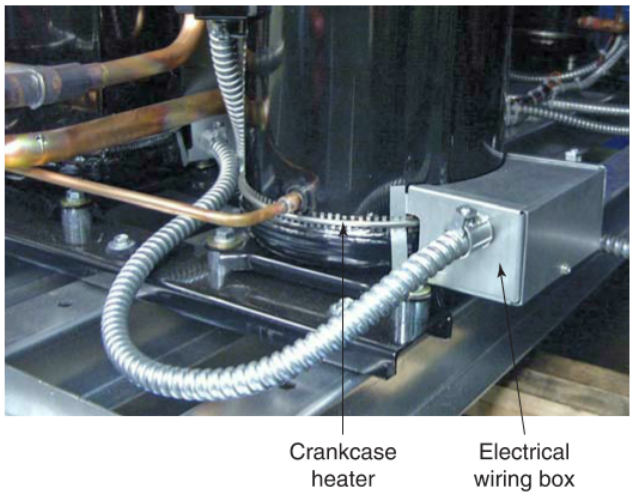

York International Corp.

Figure 19-18. Crankcase heater installed along the outside bottom part of a compressor.

Copyright Goodheart-Willcox Co., Inc.

Chapter Review

Summary

- Compressors are mechanical devices that require lubrication and cooling for safe and efficient operation. Safety devices are used to ensure clean oil at proper levels and sufficient vapor flow for cooling.
- Compressor protection devices stop operation based on the monitoring of several variables: current on the compressor motor, head pressure, temperature of the compressor dome, and temperature of the discharge line.
- Overcurrent protection for compressors is available in the forms of fuses, circuit breakers, and internal overload devices. Thermal overloads protect compressors from high internal and ambient temperatures. Crankcase pressure regulators prevent higher than normal pressure from entering the compressor, which prevents the compressor's motor from drawing high current that could overload it. Discharge line pressure switches cycle off the system if head pressure rises too high. Discharge line thermostats cycle off the system if discharge line temperature rises too high.
- Accumulators reduce the risk of liquid refrigerant flowing into the compressor. This tank consists of a reservoir on the bottom for liquid refrigerant and an inlet and outlet on top for vapor refrigerant. Accumulators store any low-side refrigerant that has condensed into a liquid. This helps to prevent liquid slugging of the compressor.
- Oil control system devices include oil separators, oil reservoirs, pressure differential valves, oil level regulators, and oil safety controls. An oil separator removes oil from refrigerant vapor in the discharge line. Oil collected by an oil separator is often stored in an oil reservoir.
- Oil level regulators monitor the level of oil in compressors. When oil levels drop too low, an oil level regulator allows oil to be drawn into the compressor from the oil reservoir. An oil pressure safety control senses compressor oil pressure or level and turns off the compressor if measured levels drop too low for too long.
- Vibration absorbers are flexible refrigerant lines that reduce or dampen any vibration or physical motion transmitted to them. They should be installed horizontally on either side of the compressor perpendicular to the direction of vibration.
- A crankcase heater warms the compressor to keep the refrigerant inside from condensing during the Off cycle. This prevents the compressor from liquid slugging or having a flooded start.

Review Questions

Answer the following questions using the information in this chapter.

1. To prevent damage to the mechanical parts of a compressor, it should only be pumping _____ from the low to high side.
   A. contaminant-free oil
   B. filtered water
   C. liquid refrigerant
   D. vapor refrigerant
2. To keep its mechanical parts well lubricated and free from damage, a compressor should be supplied with _____.
   A. contaminant-free oil
   B. filtered water
   C. liquid refrigerant
   D. vapor refrigerant
3. Compressor overcurrent protection may be provided by the following devices, *except* for _____.
   A. accumulators
   B. circuit breakers
   C. fuses
   D. internal overload devices
4. A thermal overload monitors _____ and turns off the compressor when levels are too high.
   A. crankcase pressure
   B. discharge line pressure
   C. discharge line temperature
   D. temperature of the compressor and ambient air
5. An accumulator traps _____ to prevent compressor slugging.
   C. discharge line liquid
   B. liquid line vapor
   D. subcooled refrigerant
   A. suction line liquid
6. A system component that removes oil from high-pressure refrigerant vapor as both refrigerant and oil leave the compressor is a(n) _____.
   A. oil level regulator
   B. oil reservoir
   C. oil safety control
   D. oil separator

Copyright Goodheart-Willcox Co., Inc.

7. An oil level regulator uses a float mechanism to determine oil level and is mounted to the side of the _____.
   A. compressor
   B. oil reservoir
   C. liquid receiver
   D. accumulator
8. A form of control that will shut off electrical power to the compressor if the net oil pressure or oil level drops below normal for a certain amount of time is a(n) _____.
   A. oil level regulator
   B. oil reservoir
   C. oil safety control
   D. oil separator
9. Which of the following statements regarding vibration absorbers is *not* true?
   A. Vibration absorbers can be placed on either side of the compressor.
   B. Vibration absorbers should be installed vertically whenever possible.
   C. The end of the vibration absorber farthest from the vibration source should be secured.
   D. Vibration absorbers should be insulated if they are installed in a suction line that is below 32°F (0°C).
10. A crankcase heater is used to warm a compressor to prevent the condensing of _____ the crankcase.
   A. moisture inside
   B. moisture outside
   C. oil inside
   D. refrigerant inside

Copyright Goodheart-Willcox Co., Inc.

CHAPTER 20 Metering Devices

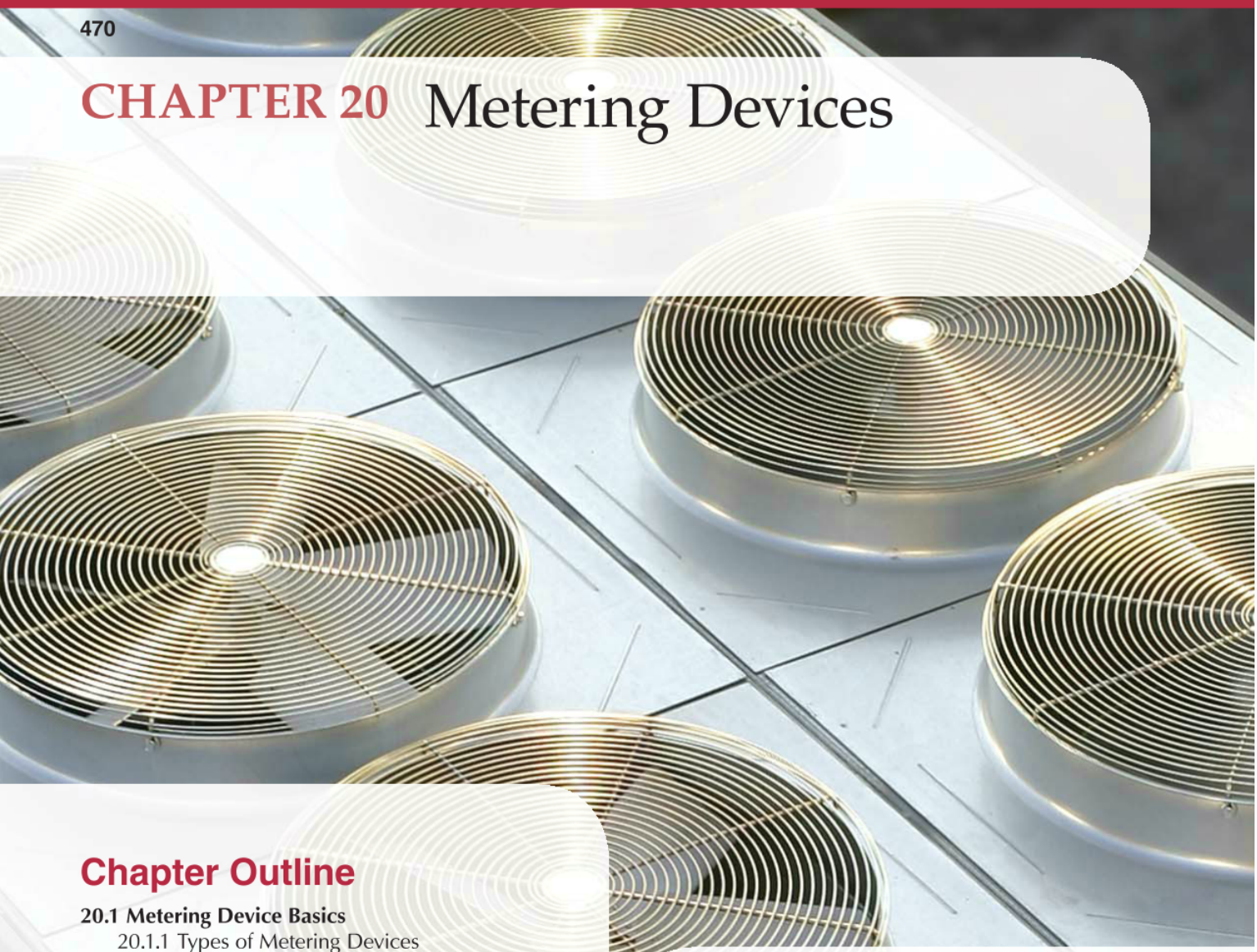

Chapter Outline

20.1 Metering Device Basics
- 20.1.1 Types of Metering Devices
- 20.1.2 Fixed and Modulating Metering Devices

20.2 Capillary Tubes
- 20.2.1 Capillary Tube Capacities
- 20.2.2 Capillary Tube Fittings
- 20.2.3 Applications

20.3 Metering Orifices

20.4 Thermostatic Expansion Valves (TXVs)
- 20.4.1 Thermostatic Expansion Valve Operation
- 20.4.2 Thermostatic Expansion Valve Design
- 20.4.3 Thermostatic Expansion Valve Capacities
- 20.4.4 Special Thermostatic Expansion Valves

20.5 Automatic Expansion Valves (AXVs)
- 20.5.1 Automatic Expansion Valve Operation
- 20.5.2 Automatic Expansion Valve Design

20.6 Electronic Expansion Valves (EEVs)
- 20.6.1 Stepper Motor EEVs
- 20.6.2 Pulse Width–Modulating (PWM) Solenoid EEVs

20.7 Float-Operated Refrigerant Controls
- 20.7.1 Low-Side Float (LSF)
- 20.7.2 High-Side Float (HSF)

Learning Objectives

Information in this chapter will enable you to:

- Summarize the purpose of metering devices.
- Categorize metering devices as modulating or fixed.
- Summarize the design and function of capillary tube and fixed-orifice metering devices.
- Explain the design and function of common types of thermostatic expansion valves (TXVs).
- Summarize the design and function of automatic expansion valves (AXVs).
- Explain the design and function of common types of electronic expansion valves (EEVs).
- Understand the differences between high-side float (HSF) refrigerant controls and low-side float (LSF) refrigerant controls.

Technical Terms

adsorption
automatic expansion valve (AXV)
capillary tube
distributor
dual-pressure regulator
electronic expansion valve (EEV)
equalizer
flooded system
frost back
heat exchanger
high-side float (HSF)
hunting
initialization
liquid slugging
low-side float (LSF)
metering orifice
MOP thermostatic expansion valve
oil binding
orifice
pressure limiter
PWM solenoid EEV
starving
thermostatic expansion valve (TXV)
weight valve

Review of Key Concepts

Reviewing these concepts from earlier chapters will help you understand new concepts presented in this chapter:

- Decreasing the pressure on a gas causes the gas to expand and causes its temperature to drop. This phenomenon, along with a change of physical state from liquid to gas, provides the cooling action in a refrigeration system. (Chapter 5)
- A metering device is located between the liquid line and the evaporator. Its function is to lower the pressure of the refrigerant by restricting the passageway into the evaporator. (Chapter 6)
- The proper method for checking refrigerant charge in a system is dependent on the type of metering device used in the system. Subcooling is used to check refrigerant charge in a system that uses a thermostatic expansion valve. Superheat is used to check refrigerant charge in a system with a fixed-orifice or capillary tube metering device. (Chapter 11)
- A solenoid is an electromagnetic device composed of a coil of wire wrapped around a case with a movable iron core, which is called a plunger. The plunger is pulled into the center of the case, or solenoid body, by electromagnetic force when current passes through the coil. (Chapter 14)
- A sensing bulb is a device, filled with a volatile liquid, that reacts to heat by changing its internal pressure. The sensing bulb is connected by a capillary tube to a diaphragm or bellows. Changes in sensing bulb temperature result in pressure change that causes the movement of the diaphragm or bellows. (Chapter 16)

Introduction

In order for a refrigeration system to function properly, the proper quantity of refrigerant must be circulated through the system at the proper pressures. Metering devices restrict the flow of refrigerant to create the proper pressure drop between the high-side and low-sides of the system. Metering devices may be orifices of fixed size that provide a continuous restriction in the flow of refrigerant, or they may be valves, which can vary the flow to meet the demands of varying loads.

Video

- Types of Metering Devices

20.1 Metering Device Basics

Mechanical refrigeration and air conditioning systems depend on a change of pressure as liquid refrigerant flows into the evaporator. Many different types of mechanical and electromechanical devices can be used to create this pressure difference in a system. These devices are referred to as *metering devices* and are installed between the liquid line and the evaporator.

A metering device provides a small opening, or ***orifice***, through which only a certain amount of refrigerant can flow at one time. As the system operates, a limited amount of the refrigerant is allowed to pass through the metering device into the evaporator. Since only a small amount of refrigerant is entering the evaporator, the refrigerant has room to expand and is at a low pressure. However, since only a small amount of refrigerant passes through the metering device, the refrigerant in the liquid line remains under high pressure. The metering device must allow just the right amount of refrigerant to pass to sustain this pressure difference.

20.1.1 Types of Metering Devices

There are many different types of metering devices. The simplest type of metering device is the capillary tube. One of the more complex controls is the electronic expansion valve, which is controlled by a microprocessor. The most common types of metering devices are:

- Capillary tube (cap tube).
- Metering orifice.
- Thermostatic expansion valve (TXV).
- Automatic expansion valve (AXV).
- Electronic expansion valve (EEV).
- Low-side float (LSF).
- High-side float (HSF).

Pro Tip

TXV and TEV, AXV and AEV, and EEV and EXV

Although the abbreviation TXV is used to refer to thermostatic expansion valves throughout this book, in the field you will find the abbreviation TEV may be used instead. Both abbreviations refer to the same type of valve. Similarly, the abbreviation AXV is used in this book to identify automatic expansion valves. In the field, you may encounter the abbreviation AEV used to describe the same type of valve. The same also applies to electronic expansion valves, which are indicated by the abbreviation EEV in this book. In the field, electronic expansion valves may also be identified by the abbreviation EXV.

20.1.2 Fixed and Modulating Metering Devices

Fixed metering devices are the simplest type of metering devices. They have a fixed diameter passage through which the refrigerant must pass to enter the evaporator. These simple metering devices have few or no moving parts to fail. The two main types of fixed metering devices are capillary tubes and metering orifices. Capillary tubes are used extensively in refrigerators and window ac units. Metering orifices are frequently used in heat pumps and split air conditioning systems. The rate of flow through fixed metering devices is relatively constant when the compressor is running.

Metering devices that can change their orifice size to account for changes in cooling loads are referred to as modulating metering devices. All types of expansion and float valves fall into this category. Because of their ability to change refrigerant flow based on load, these types of valves operate more efficiently than fixed metering devices. They are also better suited for use in an application that is subject to frequent or extreme changes in the cooling load.

20.2 Capillary Tubes

A ***capillary tube*** is a metering device consisting of a length of seamless tubing with a small and precisely formed inside diameter. This tube acts as a constant throttle on the refrigerant flow. Pressure decreases as the small diameter restricts the flow of liquid refrigerant through the tube. As the pressure drops, a small amount of the liquid starts to evaporate in the tube. The vapor that is produced by the drop in pressure is known as *flash gas*, and its formation provides a sudden drop in temperature in approximately the last quarter of the tube length. The refrigerant is cooled to evaporator temperature, and its pressure is reduced to evaporator pressure.

The performance of a capillary tube depends on the following variables:

- Tube length.
- Inside diameter.
- Number of turns.

The amount of restriction and resulting pressure drop is designed by the system manufacturer to provide the maximum cooling effect for the system. The length, inside diameter, and number of turns in the capillary tube determines how much the pressure drops between the condenser and evaporator. The longer the capillary tube, the greater the pressure drop. The smaller the diameter, the greater the pressure drop. Turns create friction as the refrigerant flows and create

Copyright Goodheart-Willcox Co., Inc.

additional pressure drops. The more turns, the greater the pressure drop.

A capillary tube is usually attached between the evaporator and the liquid line. In some applications, a capillary tube serves the function of both the metering device and the liquid line. In such a case, it is connected between the evaporator and the condenser. If the distance between the evaporator and the liquid line or condenser is shorter than the required length of the capillary tube, a portion of the capillary tube can be coiled so that it fits. A fine filter or a filter-drier is usually installed between the liquid line or condenser and the capillary tube. The filter drier helps prevent contaminants from entering and clogging the capillary tube, **Figure 20-1**.

A capillary tube can be installed so that a portion of it is in contact with the suction line. This allows the two tubes to act as a heat exchanger, in which the capillary tube transfers some of its heat to the cooler suction line through conduction. This heat transfer superheats the refrigerant in the suction line and subcools the refrigerant in the liquid line, which improves system efficiency.

Pro Tip

Heat Exchangers

A ***heat exchanger*** is any device in which heat is exchanged between two mediums. There are numerous types of heat exchangers in HVACR systems. Evaporators and condensers are common examples. They exchange heat between air and the refrigerant within their tubing. Heating systems have much different heat exchangers that are based on their method of heat production.

Recent capillary tube designs use a larger diameter and are longer. The larger diameter tube is less likely to become plugged with dirt, ice, or wax. Since the larger diameter creates less restriction than a smaller diameter, the length of the capillary tube must be longer to have the same effect.

Capillary tubes do not have check valves or directional control valves. Since the refrigerant is free to flow in either direction, the high-side and low-side pressures equalize when the compressor switches off. In a capillary tube system, since the compressor starts with equal pressures on the high and low sides, a high-torque motor is not required.

Because system pressures equalize when the compressor shuts off and there is no liquid receiver to store excess refrigerant, a capillary tube system must not have an overcharge of refrigerant. Extra refrigerant tends to fill the evaporator too full. This causes the motor to work harder during start-up and also increases the risk that liquid refrigerant could be drawn into the compressor. Severe frosting of the suction line during compressor start-up indicates an overcharge.

20.2.1 Capillary Tube Capacities

Capillary tubes must be appropriately sized for their applications. The required length and diameter of the capillary tube are determined by the capacity of the compressor, the type of refrigerant being used, and the desired target temperature of the system. Approximate sizes for capillary tubes in different applications are shown in **Figure 20-2**.

The proper capillary tube size also depends on the type of condenser used in the application. Static condensers are condensers that do not have a fan. They depend on convection to cool the condenser. Static condensers are most often found in older domestic refrigerators. In general, systems with static condensers require a 10% longer capillary tube than those with fan-cooled condensers because static condensers cannot remove heat as efficiently. Because different refrigerants have different pressure-temperature characteristics, the type of refrigerant used in a system also affects capillary tube sizing.

20.2.2 Capillary Tube Fittings

A capillary tube can be attached between the evaporator and the liquid line, condenser, or filter-drier with either brazed connections or fittings. If fittings are used, they must be leak proof and able to withstand vibration. **Figure 20-3** illustrates ways to make these connections.

Figure 20-3A shows the use of a special nut that squeezes against both the capillary tube and the fitting. The nose section is deformed as the nut is tightened. The nut should always be replaced when the capillary tube is serviced. **Figure 20-3B** shows the capillary tube brazed to 1/4″ OD soft copper tubing. The larger tube can then be connected to the system by the usual flared fitting. **Figure 20-3C** shows a larger tube brazed to the capillary tube. The larger tube connection is then made with a flared fitting. This type of connection would normally be replaced with a special capillary tube fitting during a system overhaul. **Figure 20-3D** shows a standard flared fitting connected to a special capillary tube fitting. The diameter of the capillary tube determines the size of the fitting.

20.2.3 Applications

Capillary-tube metering devices are usually used on small, fractional-horsepower, hermetic compressor systems that are charged with refrigerant by the manufacturer. These types of systems are commonly found in

Copyright Goodheart-Willcox Co., Inc.

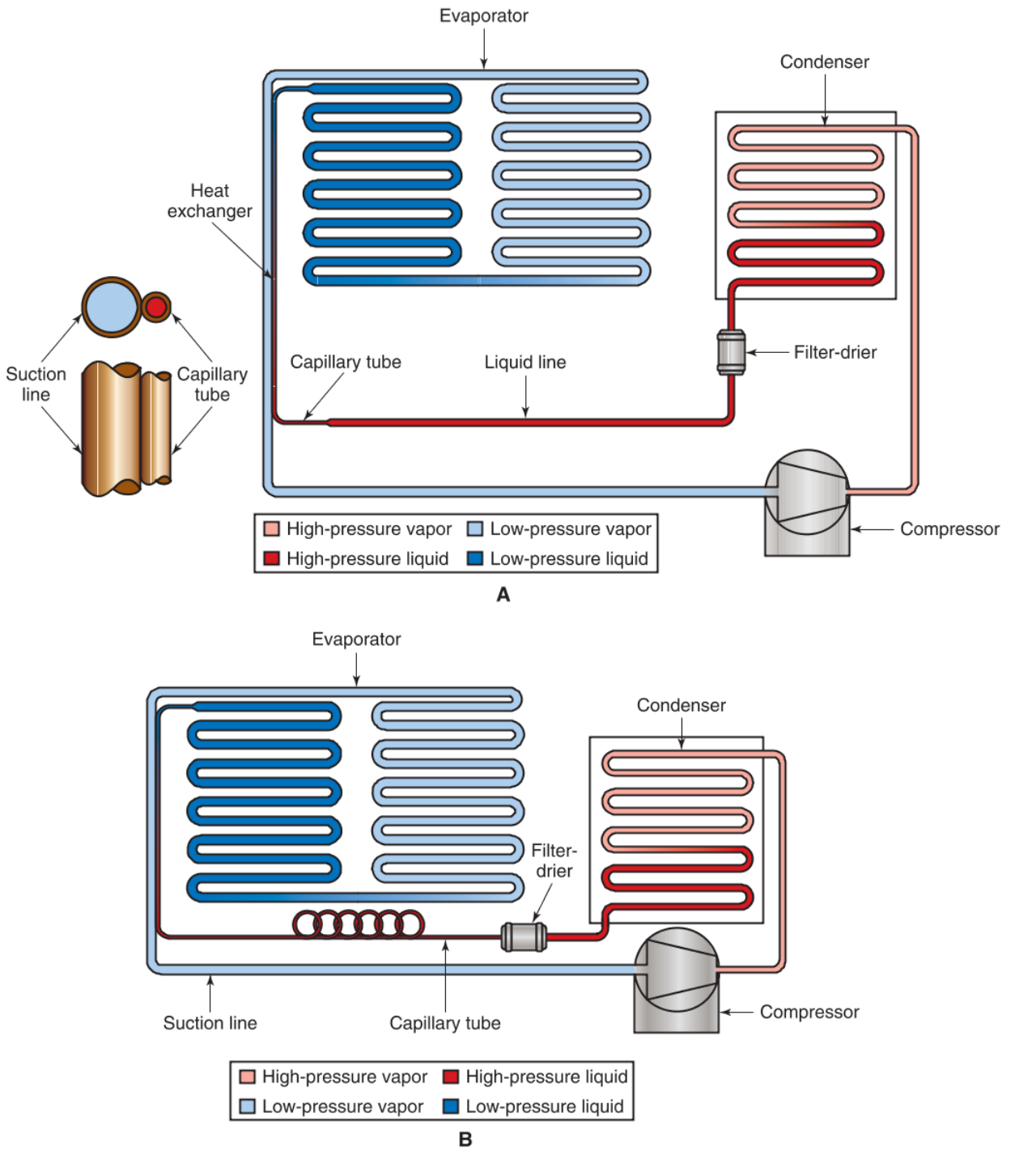

Goodheart-Willcox Publisher

Figure 20-1. Two simple schematics of refrigeration systems that use capillary tubes. In both, a filter-drier is located ahead of the capillary tube. Also in both, part of the capillary tube is fastened to the suction line to function as a heat exchanger. A—The capillary tube is connected to the liquid line. B—In this system, the capillary tube serves as the liquid line. Part of the capillary tube is coiled due to its length.

Copyright Goodheart-Willcox Co., Inc.

Capillary Tube Length and Diameter								
			Low Temp. Evaporator (–20°F)		Med. Temp. Evaporator (20°F)		High Temp. Evaporator (40°F)	
Compressor Horsepower	Refrigerant	Condenser Type	Length	Inside Diameter	Length	Inside Diameter	Length	Inside Diameter
1/8	R-12	Fan	108"	0.028"	84"	0.028"	48"	0.028"
	R-12	Static	118"	0.028"	92"	0.028"	53"	0.028"
	R-134a	Fan	118"	0.028"	96"	0.028"	58"	0.028"
	R-134a	Static	130"	0.028"	106"	0.028"	64"	0.028"
	R-410A	Fan	N/A	N/A	144"	0.028"	81"	0.028"
1/4	R-12	Fan	43"	0.031"	90"	0.040"	60"	0.040"
	R-12	Static	47"	0.031"	99"	0.040"	66"	0.040"
	R-134a	Fan	47"	0.031"	103"	0.040"	72"	0.040"
	R-134a	Static	52"	0.031"	113"	0.040"	79"	0.040"
	R-410A	Fan	73"	0.031"	40"	0.031"	101"	0.040"
1/2	R-12	Fan	96"	0.052"	48"	0.052"	90"	0.064"
	R-134a	Fan	115"	0.052"	58"	0.052"	108"	0.064"
	R-410A	Fan	37"	0.040"	84"	0.052"	42"	0.052"

Goodheart-Willcox Publisher

Figure 20-2. This table lists the appropriate capillary tube dimensions for use in different systems.

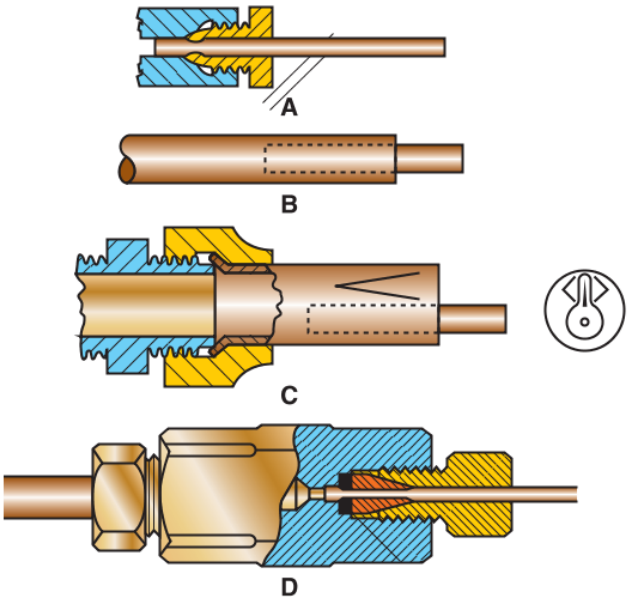

A-1 Components Corporation

Figure 20-3. Some typical capillary tube connections. A—The capillary tube is connected to the liquid line with a special compression fitting. B—The capillary tube is brazed to the liquid line. C—The capillary tube is brazed to a short section of larger tubing, which is then connected to the liquid line with a standard flare fitting. D—This liquid line standard flare fitting is connected to a special capillary tube fitting.

domestic refrigerators and freezers. The small hermetic compressors typically used in these appliances do not have the torque required to start up when the high side of the system is under pressure. The capillary tube allows the high-side pressure and low-side pressure of a system to equalize when the compressor is off, reducing the torque required to start the compressor.

The main advantage of the capillary tube is that it has no moving parts to wear out or stick. The most common cause of capillary tube failure is a bent, crimped, or plugged tube. Bending or crimping is usually the result of someone cleaning the condenser and accidentally hitting the capillary tube. Capillary tubes may become plugged due to wax buildup from overheated oil in the system or from compressor failures. When a capillary tube is replaced, it is a good practice to also install a new liquid line filter-drier. It is also important to replace the capillary tube with another capillary tube with the same length and inside diameter. The amount of refrigerant charge is critical in capillary tube systems. Overcharging or undercharging results in poor system performance.

Capillary tubes are inexpensive and work well on small hermetic systems. However, they do not control evaporator performance as precisely as expansion valves. Expansion valves alter refrigerant flow based on changes to system pressure and temperature. Capillary

Copyright Goodheart-Willcox Co., Inc.

tubes have a fixed diameter and length, so the rate of flow remains fairly constant.

20.3 Metering Orifices

A ***metering orifice*** is a fixed-orifice metering device that consists of a fitting with a small hole, called an orifice, between the fitting's inlet and outlet. The orifice limits the amount of refrigerant that can pass through the fitting. This creates a pressure drop between the fitting's inlet and outlet. A metering orifice is installed between the condenser and evaporator and provides the pressure drop between the high side and low side of the system. It can be removed and cleaned for service.

The orifice must be correctly sized in order to produce the proper pressure drop for a given system. The refrigerant charge is also critical in a system with a metering orifice. These are frequently used in packaged air-conditioning units or split systems where the condenser, evaporator, refrigerant charge, and compressor sizes are determined by the system manufacturer.

The orifice size may need to be changed for units with long suction line sets to account for the extra refrigerant charge. Manufacturers often supply several metering orifices for air conditioners that may require on-site changes to the suction line length. This allows the technician to select and install the correct size based on the system's final design.

One type of metering orifice commonly used in heat pump applications has a sliding fluted piston with a small hole in it. The high pressure from the condenser pushes the piston against its seat, causing the device to operate like a normal metering orifice. When the refrigerant flow reverses for the heating mode, pressure is applied to the other side of the piston, causing it to slide to the center of the housing. This lifts the piston from its seat, and allows refrigerant to flow through the flutes in the piston, which greatly increases refrigerant flow through the device, **Figure 20-4**.

Heat pumps often use two piston-type metering orifices installed between indoor and outdoor coils. One metering orifice meters refrigerant flow during the cooling mode and allows free flow during the heating mode. The other metering orifice meters refrigerant flow during the heating mode and allows free flow during the cooling mode. In other heat pump systems, a single piston-type metering orifice is used at the outdoor coil, and a TXV and check valve bypass line are used at the indoor coil.

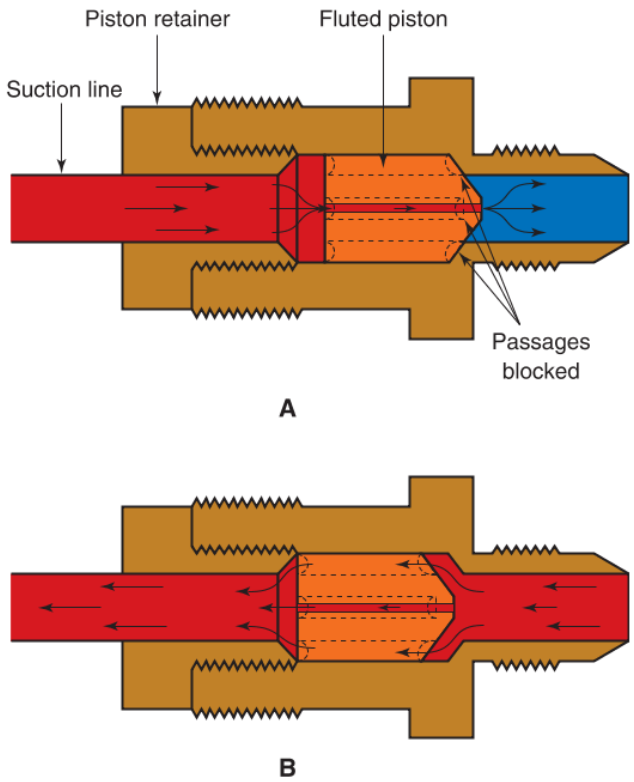

Goodheart-Willcox Publisher

Figure 20-4. A piston-type metering orifice. A—In one mode, refrigerant flow pushes the piston into contact with its seat. The only path for refrigerant is through the bore in the center of the piston. B—During the other mode, refrigerant flow pushes the piston off its seat. Refrigerant can then flow through the flutes around the outside of the piston as well as through the bore in the center of the piston, eliminating any pressure drop.

Pro Tip

Metering Orifice Devices

Metering orifices are sometimes called fixed-orifice metering devices, flowraters, flow restrictors, accuraters, pistons, or orifices. Be aware of the different names used across industry.

Thinking Green

Fixed Metering Devices

Because they are unable to adjust the refrigerant flow rate, fixed metering devices are less efficient than thermostatic expansion valves under varying load conditions. In many cases, the efficiency of older comfort cooling systems equipped with fixed metering devices can be dramatically improved by installing a thermostatic expansion valve.

Copyright Goodheart-Willcox Co., Inc.

20.4 Thermostatic Expansion Valves (TXVs)

A ***thermostatic expansion valve (TXV)*** is a type of expansion valve metering device that adjusts the refrigerant flow rate based on a superheat pressure signal from a sensing bulb at the evaporator's outlet. It is capable of adjusting the refrigerant flow rate to compensate for varying loads. TXVs are commonly used in large commercial refrigerators and many air-conditioning systems. They are also often used on multiple-evaporator systems. A multiple-evaporator system using thermostatic expansion valves can provide different temperatures in different cabinets. The correct valve size and sensing bulb must be chosen for each application.

A thermostatic expansion valve has a sensing bulb mounted on the outlet of the evaporator. The *sensing bulb* is a sealed bulb connected to the thermostatic expansion valve by a capillary tube. The sensing bulb is filled with a volatile fluid, and pressure inside the bulb changes with the temperature at the evaporator outlet. The refrigerant flow rate through a thermostatic expansion valve is controlled by the combination of the system's low-side pressure and the pressure signal from the sensing bulb. The valve provides a high flow rate as the evaporator empties (warms) and reduces the flow as the evaporator fills with refrigerant (cools), **Figure 20-5**.

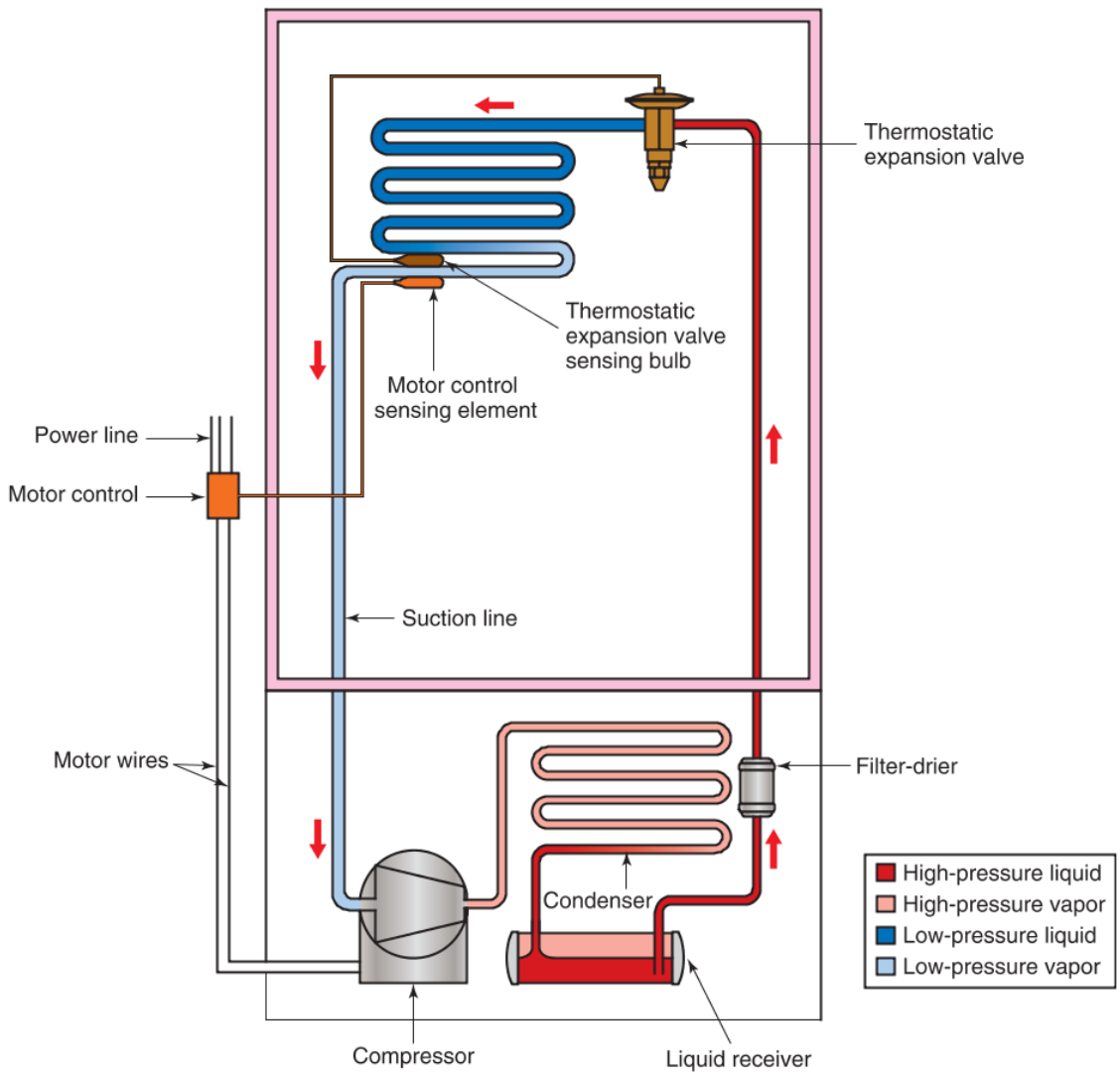

Goodheart-Willcox Publisher

Figure 20-5. A thermostatic expansion valve (TXV) used in a simple refrigeration system. Note that the thermostatic expansion valve's sensing bulb and a motor control sensing element are both installed on the evaporator outlet.

Copyright Goodheart-Willcox Co., Inc.

20.4.1 Thermostatic Expansion Valve Operation

A thermostatic expansion valve is operated by a pressure difference between the sensing bulb pressure and low-side (evaporator) pressure. See **Figure 20-6**. If the pressure in the sensing bulb (P_1) is greater than the combined pressure from the evaporator (P_2) and the spring (P_3), the valve is forced open. If the combined pressure from the spring (P_3) and evaporator (P_2) are greater than the sensing bulb pressure (P_1), the valve closes.

With the compressor running, there is a temperature difference in the refrigerant between evaporator inlet (T_3) and outlet (T_2). This temperature difference is called superheat, and it represents the sensible heat (measurable temperature) absorbed by refrigerant vapor passing through the evaporator outlet. A TXV is designed to maintain a set and steady superheat value. The refrigerant temperature at the outlet (T_2) is usually about 10°F (5.6°C) warmer than the refrigerant temperature at the evaporator inlet (T_3).

The refrigerant temperature at the evaporator outlet (T_2) is sensed by the TXV's sensing bulb. The temperature sensed by the sensing bulb (T_1) determines the pressure in the sensing bulb (P_1). A change in the sensing bulb temperature (T_1) will cause a corresponding change in the sensing bulb pressure (P_1).

When TXV system is operating normally, the thermostatic expansion valve is partially open and the sensing bulb pressure (P_1) exactly balances the pressure combination of the spring (P_3) and evaporator (P_2). This state is known as equilibrium. The thermostatic expansion valve will hold this position until the evaporator either warms or cools and pressures change.

When the suction line temperature drops to the motor control's cut-off temperature, the motor control shuts down the compressor. With the compressor stopped, the sensing bulb pressure (P_1) and the low-side pressure (P_2) equalize. Since the sensing bulb pressure (P_1) and low-side pressure (P_2) cancel each other out, the spring pressure (P_3) is enough to force the valve firmly into its seat. Refrigerant flow stops. The valve will stay closed until the sensing bulb pressure (P_1) once again overcomes the low-side pressure (P_2) and spring pressure (P_3). This can only happen

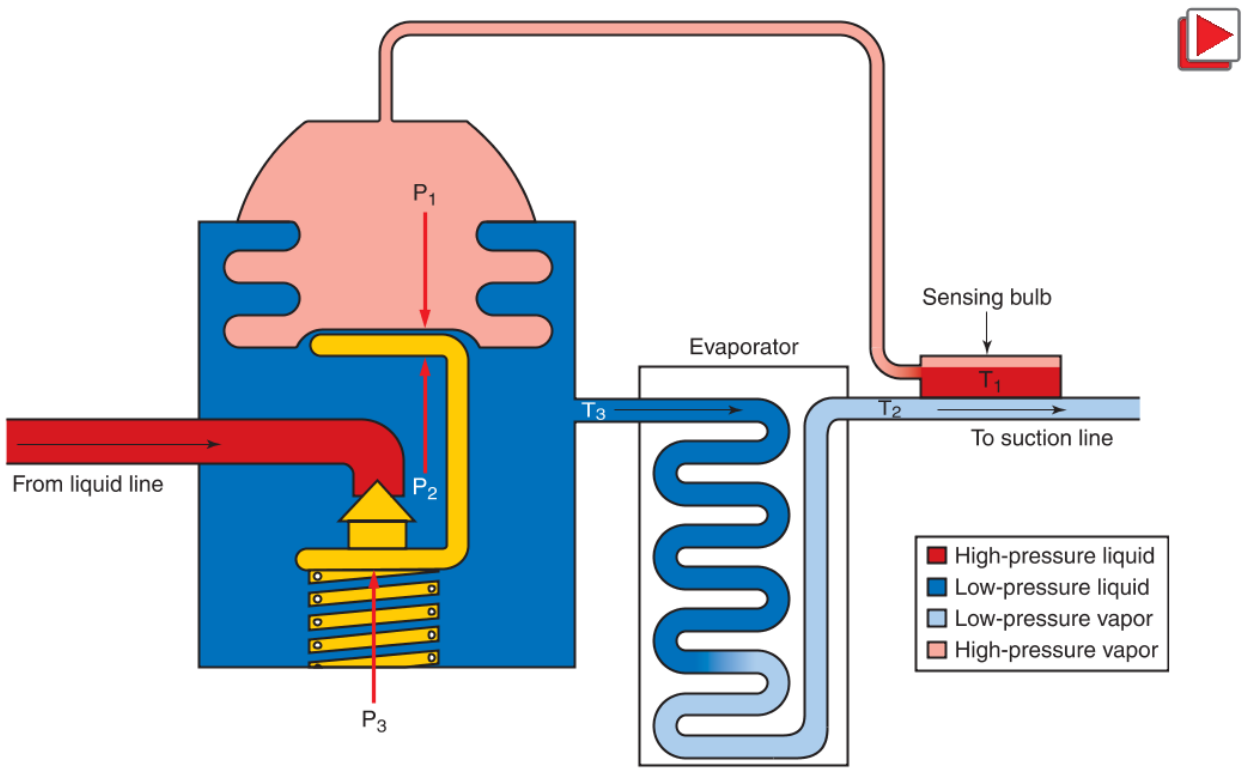

Goodheart-Willcox Publisher

Figure 20-6. A thermostatic expansion valve is operated by differences between the sensing bulb pressure and evaporator (low-side) pressure. P_1—Sensing bulb pressure acts to open the valve. P_2—Evaporator pressure acts to close the valve. P_3—Spring pressure acts to close the valve. The valve opens when P_1 is greater than combined force of P_2 and P_3. The valve closes when combined P_2 and P_3 forces are greater than P_1.

Copyright Goodheart-Willcox Co., Inc.

after the compressor is restarted and begins pumping down pressure in the evaporator (P_2).

In some TXV systems, high-side and low-side pressures do not balance during the Off cycle. Therefore, it is necessary to have a compressor that is capable of starting under load. On the other hand, some special TXVs are equipped with bleed ports or valves that do equalize pressure, allowing a lower-torque compressor motor to be used.

If a thermostatic expansion valve is adjusted correctly, it will close and remain closed whenever the compressor is idle. It will remain closed unless the evaporator is under reduced pressure, and the temperature is above normal. This prevents flooding of the low side with liquid refrigerant. A thermostatic expansion valve does not regulate the low-side pressure. It controls superheat by filling the evaporator with precise amounts of refrigerant. The pumping action of the compressor establishes low-side pressure.

Some large air-conditioning systems may use as many as six thermostatic expansion valves on one evaporator. In this way, it is possible to maintain constant pressures and temperatures, ensure the evaporator has a full charge of refrigerant, and reduce the pressure drop through the evaporator.

Flash Gas

As mentioned earlier, flash gas is refrigerant vapor that forms in the evaporator due to a sudden drop in pressure between the high side and low side of the system. As heat is absorbed to form the flash gas, the temperature of the remaining liquid refrigerant in the evaporator drops.

Superheat

The term *superheat* refers to the difference in temperature between the evaporator inlet and the evaporator outlet. See **Figure 20-7**. A system adjusted to operate at a normal 10°F (5.6°C) superheat is shown in **Figure 20-7A**. Increasing the superheat too much starves the evaporator. ***Starving*** the evaporator means that liquid refrigerant is present in only part of the evaporator. **Figure 20-7B** shows the same valve adjusted to maintain a superheat setting of 25°F (14°C). At this setting, the evaporator is starved, reducing the efficiency of the system.

On the other hand, lowering the superheat too much floods the evaporator. Too much refrigerant in the evaporator can result in liquid refrigerant being drawn into the compressor. This condition is referred to as ***liquid slugging***, and it can damage the compressor. **Figure 20-8** lists typical superheat setting ranges based on the operating temperature range of the evaporator. However, the manufacturer's recommendation for the superheat setting should always be followed.

Minimum Stable Signal (MSS) Setting

As the temperature of the evaporator drops, the amount of superheat increases. The amount of superheat in the suction line is largely determined by the refrigerant control. The best superheat setting for an evaporator is the point that causes the least sensing bulb temperature change while the system is running. This setting is called the minimum stable signal (MSS) point or setting.

For example, consider the following data regarding the operating behavior of a particular valve and evaporator combination:

- At 12°F (6.7°C) superheat, the bulb temperature changes from 14°F to 10°F (7°C to 5.6°C).
- At 10°F (5.6°C) superheat, the bulb temperature changes from 11°F to 9°F (6.1°C to 5°C).
- At 8°F (4.4°C) superheat, the bulb temperature changes from 8.5°F to 7.5°F (4.7°C to 4.2°C).
- At 6°F (3.3°C) superheat, the bulb temperature changes from 8°F to 4°F (4.4°C to 2.2°C).

The minimum stable signal point would be an 8°F (4.4°C) superheat setting, because it produces the smallest variation in sensing bulb temperature, 1°F (.6°C) of change. In order to make the system function at maximum efficiency, the superheat setting should therefore be adjusted to 8°F (4.4°C).

Thermostatic Expansion Valve Adjustment

A typical thermostatic expansion valve has an adjustor for increasing and decreasing spring tension inside the valve assembly. Typically, turning the adjustor clockwise increases spring tension. Turning the adjustor counterclockwise reduces spring tension, **Figure 20-9**.

If spring tension is increased, a larger difference between the sensing bulb and evaporator pressures is required to open the valve. This results in less refrigerant entering the evaporator. Less refrigerant means it will be able to vaporize more quickly and begin to absorb more sensible heat (superheat) than previously. If the superheat setting is increased too far, refrigerant will evaporate partway through the evaporator. This will reduce the evaporator's heat absorption capacity and overall system efficiency. This condition is known as a starved evaporator.

If spring tension is decreased, a smaller pressure difference is required to open the valve, resulting in less superheat in the system. If the superheat is reduced too far, not all of the refrigerant will evaporate before it leaves the evaporator. Again, this reduces efficiency and also increases the risk that liquid refrigerant may be drawn into the compressor. For optimum performance, the valve should be adjusted so the superheat is set at the minimum stable signal (MSS) point.

Copyright Goodheart-Willcox Co., Inc.

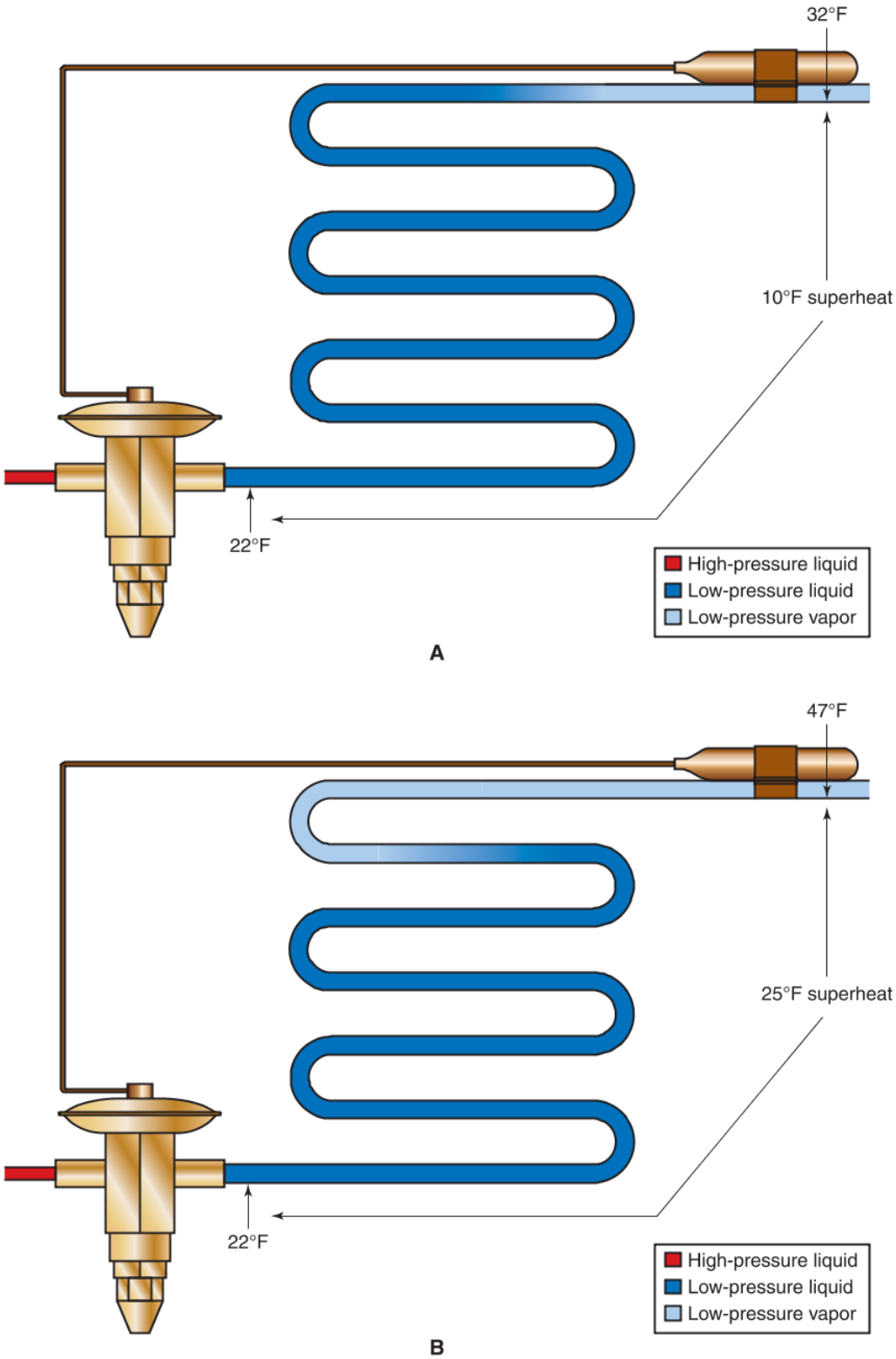

Goodheart-Willcox Publisher

Figure 20-7. Superheat settings. A—This thermostatic expansion valve is adjusted to give a normal 10°F (5.6°C) superheat. Liquid refrigerant will fill most of the evaporator. B—A TXV with a superheat setting that is high will starve the evaporator. Not enough liquid will be allowed into the evaporator to fill it. System efficiency is reduced.

Copyright Goodheart-Willcox Co., Inc.

Typical Superheat Settings Based on Evaporator Temperature Range	
Type of Evaporator	**Range of Typical Superheat Settings**
Low-temperature less than 0°F (–17.8°C)	2°F to 5°F (1.1°C to 2.8°C)
Medium-temperature 0°F to 30°F (–17.8°C to –1.1°C)	5°F to 10°F (2.8°C to 5.6°C)
High-temperature greater than 30°F (–1.1°C)	10°F to 12°F (5.6°C to 6.7°C)

Goodheart-Willcox Publisher

Figure 20-8. A table showing typical superheat settings based on evaporator temperature. This table provides typical ranges only. Always use the specific settings suggested by the system manufacturer.

The adjusting nut or screw is sensitive. It should not be turned more than one-quarter turn while the unit is operating. In addition, the system should be given 10 to 15 minutes to stabilize at the previous setting before another adjustment is made.

Hunting

The term ***hunting*** refers to a responsive mechanism going too far in one direction and then overcorrecting and returning too far in the other direction. This may also be referred to as *surging*. The term hunting, used in reference to refrigeration systems, identifies the changes in refrigerant flow through the refrigerant control.

If a valve hunts, it will alternately open up too wide, allowing too much refrigerant to flow into the

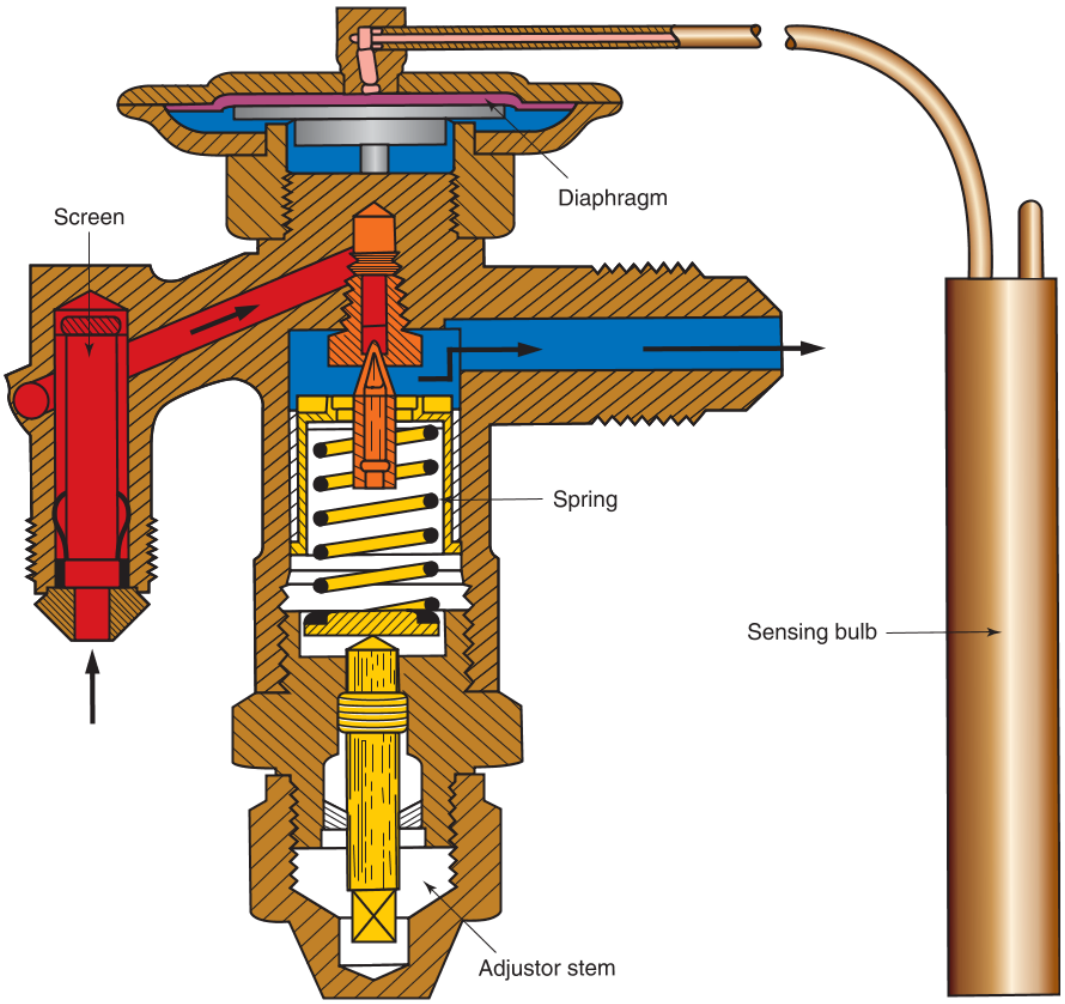

Courtesy of Sporlan Division - Parker Hannifin Corporation

Figure 20-9. Cross section showing the flow of refrigerant through a diaphragm-type thermostatic expansion valve. Sensing bulb pressure is applied to the upper surface of the diaphragm. Low-side pressure and spring pressure applied to the bottom of the diaphragm keep the valve closed until overcome by sensing bulb pressure. The adjustor can be turned to increase or decrease pressure on the spring, which changes the amount of sensing bulb pressure needed to open the valve.

Copyright Goodheart-Willcox Co., Inc.

evaporator, then close too far, not allowing enough refrigerant into the evaporator. Each extreme change reduces evaporator efficiency.

The less hunting, the more effective a system will be. When a valve is hunting too much, a uniform amount of refrigerant is not provided to the evaporator. Hunting may even allow liquid refrigerant to reach the compressor and cause compressor damage. In some cases, hunting is caused by a valve that is too large for the system.

Each thermostatic expansion valve and evaporator combination has to be properly sized for its application. In addition, a thermostatic expansion valve must be properly adjusted. The superheat adjustment should keep surging and hunting to a minimum. However, it should still permit full evaporator use.

20.4.2 Thermostatic Expansion Valve Design

A typical thermostatic expansion valve assembly has a brass body into which the liquid line and evaporator line are connected. The valve and seat are housed inside the valve body. The valve is joined to a flexible metal bellows or diaphragm. The valve is moved by a rod, connected at the other end to a sealed bellows or diaphragm (power element). A capillary tube connects the sensing bulb to the top of the TXV, above the sealed diaphragm. **Figure 20-10** shows how temperature changes in the sensing bulb translate into up-and-down movement in the valve.

The valve assembly is sealed to prevent refrigerant from seeping out and moisture from seeping in. A filter-drier should be placed in the liquid line ahead of the thermostatic expansion valve. A strainer (screen) is located between the liquid line connection and the valve assembly. The strainer keeps dirt away from the valve and seat.

Pro Tip

Filter-Drier Location

Filter-driers are typically installed at the coolest location that is outside of the refrigerated space and upstream from the metering device. On some split comfort cooling systems and heat pumps, filter-driers are installed on the liquid line, just outside of the condensing unit. On other systems, the filter-driers are installed on the liquid line, immediately in front of the metering device. On some systems, a filter-drier may be installed at both of these locations. Always follow the manufacturer's directions for positioning and installing a filter-drier.

Although a needle and seat are commonly used to control flow through thermostatic expansion valves,

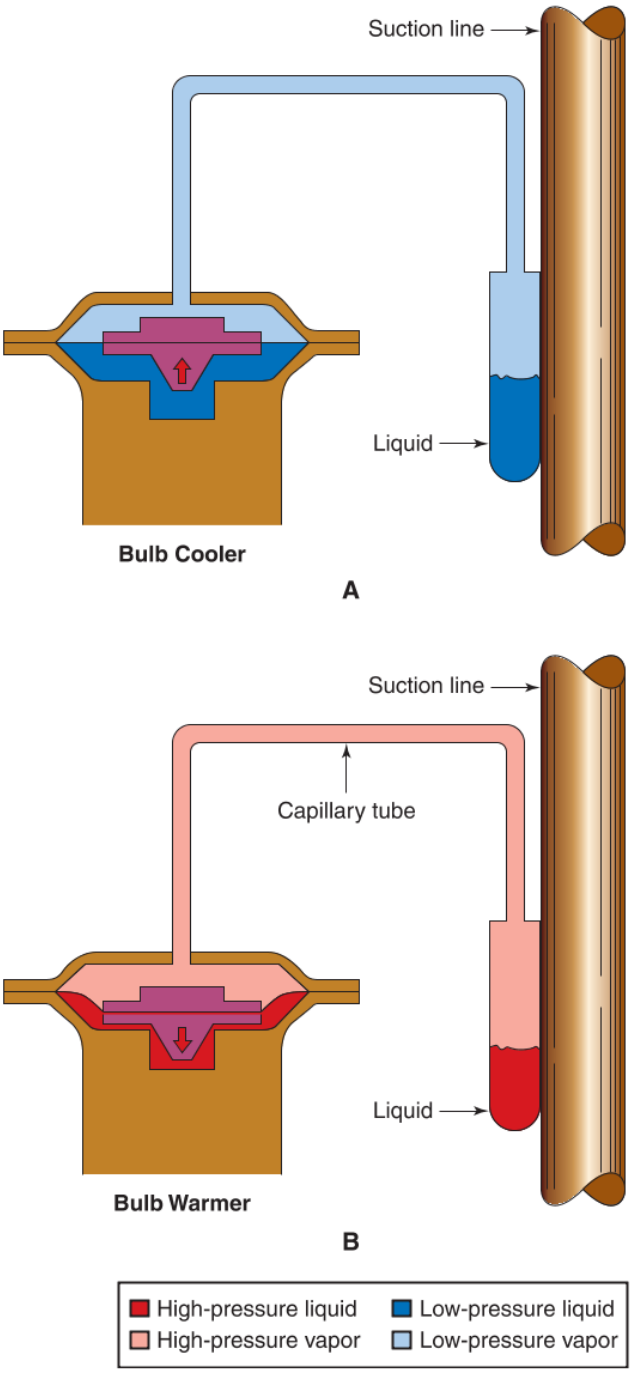

Goodheart-Willcox Publisher

Figure 20-10. The effect of sensing bulb temperature on a thermostatic expansion valve. A—The sensing bulb is cold, pressure is low, and a considerable quantity of control fluid is condensed in the bulb. B—The sensing bulb is warmer, and some control fluid has evaporated. The vapor is pushing the diaphragm downward, opening the valve further. For accurate control, there must be enough control fluid in the sensing bulb to ensure that it never completely evaporates.

Copyright Goodheart-Willcox Co., Inc.

other types of valve mechanisms might be used for different applications. For example, a ball valve is often used instead of a needle in TXV designed for applications where the refrigerant capacity in the evaporator is critically important. The ball provides positive closure with very little refrigerant bleed-through. See **Figure 20-11**.

Although the valve mechanisms within TXVs may vary, they all serve the same function. They open or close the valve orifice as needed to allow the proper volume of refrigerant flow from the liquid line into the evaporator. Some thermostatic expansion valves, like those used in heat pumps and hot-gas defrost applications, are equipped with built-in check valves. The check valve will not allow refrigerant to flow back through the TXV.

Internally Equalized Thermostatic Expansion Valves

In order to sense the low-side pressure in the system, the bottom of the thermostatic expansion valve diaphragm must be exposed to low-side pressure. In an internally equalized thermostatic expansion valve, a small passage connects the chamber under the valve diaphragm to the valve outlet. This keeps the bottom of the valve diaphragm exposed to low-side pressure at all times. The connection between the lower diaphragm chamber and the valve outlet may be a passage cast or bored into the valve, or it may simply be a large clearance around the valve push rod that allows refrigerant to leak past.

In internally equalized TXVs, the bottom of the diaphragm is exposed to evaporator inlet pressure, and the top of diaphragm is exposed to sensing bulb pressure, which is related to the temperature at the evaporator outlet. Therefore, internally equalized valves do not provide accurate control when used with evaporators that have a large pressure drop between the inlet and outlet.

Externally Equalized Thermostatic Expansion Valves

An externally equalized thermal expansion valve has an external equalizer that connects the suction line at the evaporator outlet to a chamber inside the expansion valve, just below the diaphragm. The ***equalizer*** is a small tube, usually 1/4″ OD, **Figure 20-12**.

Because the equalizer delivers pressure at the bottom of the diaphragm that is equal to the pressure at the evaporator outlet rather than the evaporator inlet,

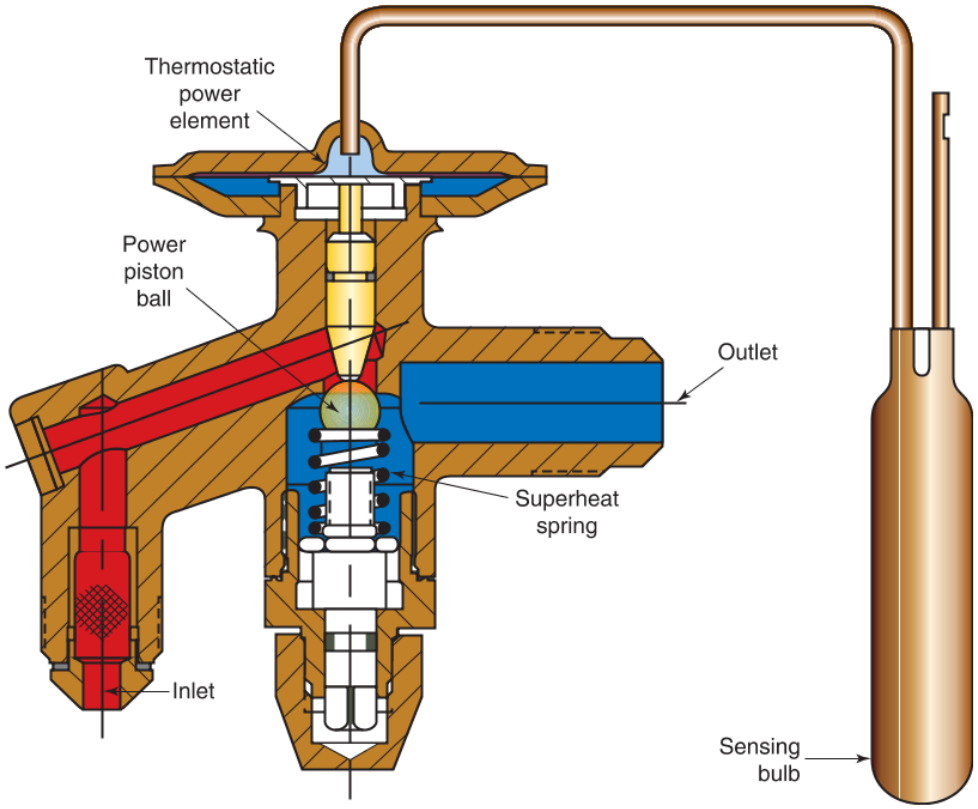

Courtesy of Sporlan Division - Parker Hannifin Corporation

Figure 20-11. A ball valve, instead of a needle, is used in this thermostatic expansion valve.

Copyright Goodheart-Willcox Co., Inc.

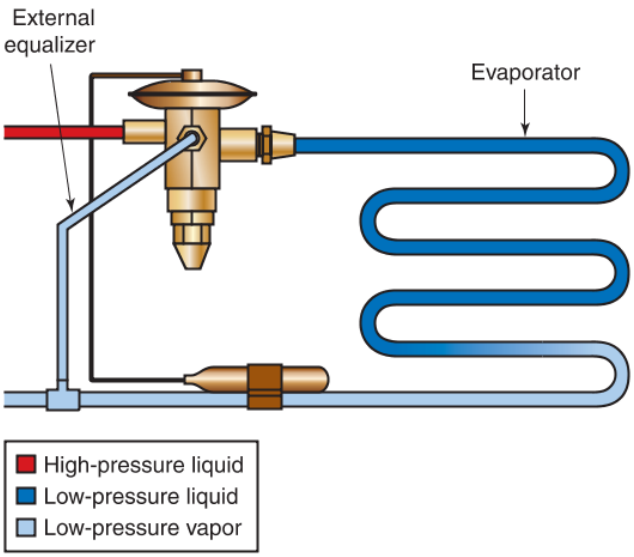

Goodheart-Willcox Publisher

Figure 20-12. A thermostatic expansion valve with an equalizer. The equalizer delivers suction line pressure at the sensing bulb location to the underside of a valve bellows or diaphragm (low-pressure side). This compensates for any pressure drop through the evaporator while the compressor is running.

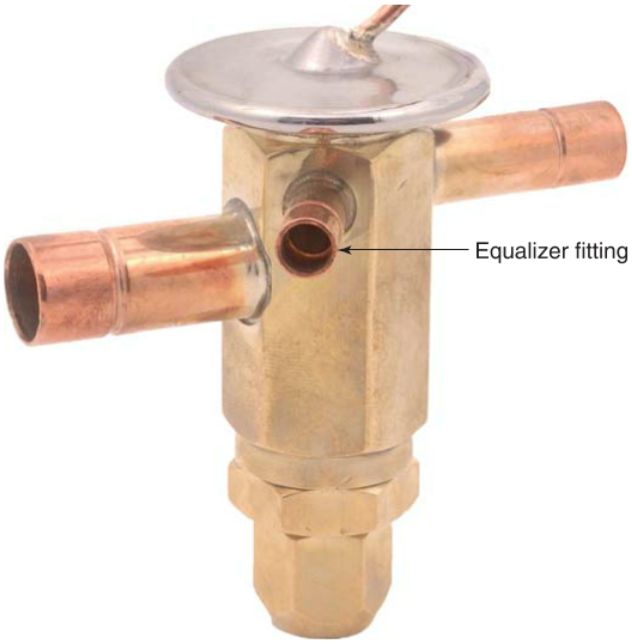

Emerson Climate Technologies

Figure 20-13. This thermostatic expansion valve is externally equalized. The fitting for the equalizer is on the front of the valve.

the valve compensates for any pressure drop through the evaporator. This allows the valve to provide the correct refrigerant flow, even when there are large pressure drops through the evaporator. A thermostatic expansion valve equipped with an external equalizer is shown in **Figure 20-13**.

There is always some pressure drop through an evaporator. An equalizer should be used if the pressure drop between the inlet of the evaporator and the outlet is more than 4 psi (28 kPa). The equalizer provides the same pressure as is in the suction line at the sensing bulb location. This equalizing of pressure will permit accurate superheating adjustments. Pressure drop in the evaporator tends to increase the superheat effect, which in turn causes the valve to restrict flow more, leading to a starved evaporator.

Thermostatic Expansion Valves with Bleed Valves and Bleed Ports

Some thermostatic expansion valves, like those used in many air conditioning systems, are equipped with bleed valves for rapid pressure balancing (RPB). These types of valves allow a compressor motor with low starting torque to be used in this type of system. In this type of TXV, a secondary port opens when the compressor stops running. Refrigerant flows through the secondary port, quickly equalizing pressures between the low side and high side. When the compressor is operating, the secondary port closes. Then, the valve operates in a normal manner.

Other TXVs are equipped with fixed bleed ports that gradually equalize low-side and high-side pressures when the compressor is off. These bleed ports are typically very small and do not adversely affect normal valve performance. However, when the compressor stops, enough refrigerant is able to pass through the bleed ports to equalize system pressures in three to five minutes. Like the RPB TXVs, thermostatic expansion valves equipped with fixed bleed ports are used in systems that have motors with low starting torque, **Figure 20-14**.

Sensing Bulb Variations

The sensing bulbs used in thermostatic expansion valves can be divided into five types, based on the type of fluid filling the bulb. Each variation of sensing bulb charge changes the operational characteristics of the valve. This means that the type of sensing bulb charge used in a thermostatic expansion valve affects how it reacts to conditions within a system. For this reason, it is extremely important to select the proper thermostatic expansion valve for a given application.

The following are the five different types of charges used in thermostatic expansion valve sensing bulbs:

- Liquid-charged.
- Gas-charged.

Copyright Goodheart-Willcox Co., Inc.

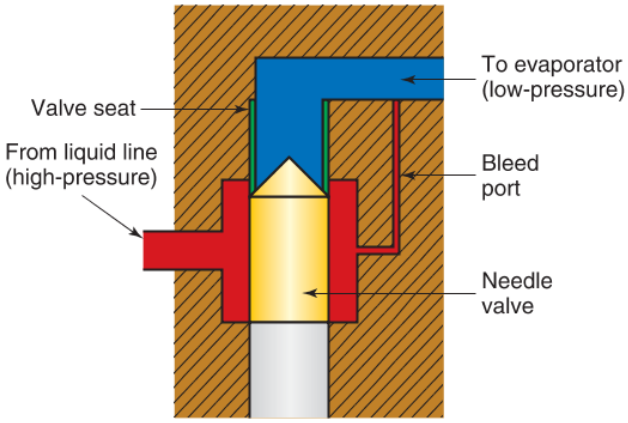

Goodheart-Willcox Publisher

Figure 20-14. Simplified TXV mechanism with a bleed port. When the valve is closed, small amounts of high-pressure liquid refrigerant continue to pass through the bleed port and enter the low-pressure side of the valve.

- Liquid cross-charged.
- Gas cross-charged.
- Adsorption gas cross-charged.

Each manufacturer has a code for identifying the fluid that charges the sensing bulb. Some use letters; others use colors or numbers. Some valves are marked with the refrigerant number; others are color-coded to identify the refrigerant with which they are to be used. **Figure 20-15** shows several thermostatic expansion valves identified by standard color coding. Green indicates the valve is designed for use with R-22, light blue is for R-134a, and yellow is for R-12.

Liquid-Charged Sensing Bulb

Liquid-charged sensing bulbs are used in air conditioners and some refrigeration systems. A liquid-charged sensing bulb is charged with the same refrigerant as the system. The quantity of fluid in the liquid-charged sensing bulb is sufficient so there is always some liquid in the bulb regardless of its temperature. Because the sensing bulb charge and evaporator are filled with the same refrigerant and the pressure inside the bulb changes at the same rate as the pressure inside the evaporator, the valve maintains a constant superheat, or *compressor superheat*, setting.

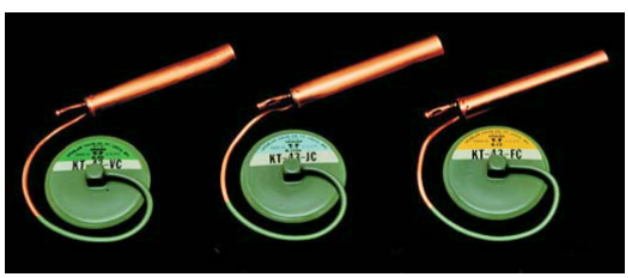

Courtesy of Sporlan Division - Parker Hannifin Corporation

Figure 20-15. The labels on these thermostatic expansion valve power heads are color-coded and include the alphanumeric designation of the refrigerant with which they are designed to be used.

In **Figure 20-16**, Curve A is a graph of evaporator pressure plus superheat-spring pressure under varying temperatures. Curve B is a graph of the sensing bulb pressure under varying temperatures. Since the same refrigerant is used in the sensing bulb and in the system, the curvature of Curve A and Curve B are identical.

At any given temperature, the pressure in Curve A is greater than the pressure in Curve B. This pressure difference occurs because Curve A represents a combination of evaporator pressure, which is affected by temperature, and superheat-spring pressure, which is not significantly affected by temperature. In this graph, the pressure exerted by the superheat spring is represented by the distance between Point *a* and Point *b*.

Since the pressure in Curve A is greater than the pressure in Curve B for any given temperature, it is also true that the sensing bulb must be warmer than the evaporator in order for the thermostatic expansion valve to remain open. This temperature difference results in the superheat added to the system and is represented in the graph by the distance between Point *a* and Point *c*.

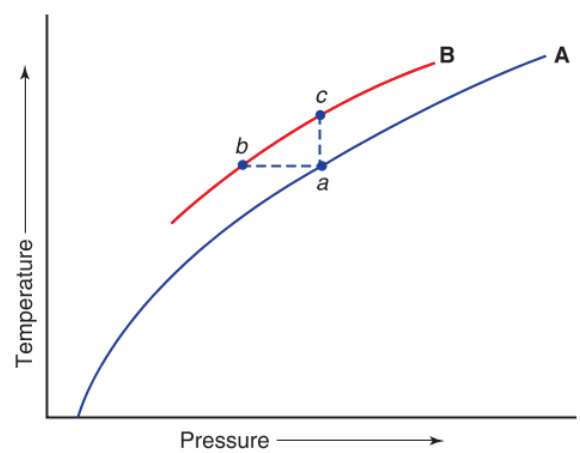

Goodheart-Willcox Publisher

Figure 20-16. In a thermostatic expansion valve with a liquid-charged sensing bulb, changes in the sensing bulb temperature and pressure mimic changes in the evaporator temperature and pressure. Curve A represents the valve closing pressures, a combination of the evaporator pressure and superheat spring pressure, graphed against temperature. Curve B represents the liquid-charged sensing bulb (valve opening) pressure graphed against temperature. Line *ab* illustrates the superheat spring pressure. Line *ac* represents the valve superheat.

Copyright Goodheart-Willcox Co., Inc.

Because there is always a reserve of liquid refrigerant in the sensing bulb and the pressure in the sensing bulb mimics the pressure in the system, the sensing bulb maintains control of thermostatic valve operation under all operating conditions. This is true even if the valve body temperature is lower than the sensing bulb temperature.

These elements are designed for a temperature range from approximately –20°F to 40°F (–28.9°C to 4.4°C). This setup may cause some evaporator flooding when the system is pulling down from normal ambient temperatures.

Liquid Cross-Charged Sensing Bulb

A liquid cross-charged sensing bulb uses a refrigerant that is different from the one in the system. For this reason, the refrigerant in the sensing bulb behaves differently than the system refrigerant under the same conditions. A liquid cross-charged sensing bulb may use a mixture of different refrigerants to achieve the desired operating characteristics.

Liquid cross-charged sensing bulbs share many similarities with liquid-charged sensing bulbs. Some liquid is always present in the bulb, regardless of temperature. Also, the sensing bulb continues to control the valve even if the valve body temperature dips below that of the bulb.

Liquid cross-charged sensing bulbs are designed for a temperature range from –40°F to 40°F (–40°C to 4.4°C). These valves are usually used for either commercial low-temperature applications or with extremely low-temperature systems. **Figure 20-17** is a graph of the operating characteristics of one type of liquid cross-charged sensing bulb.

Curve A shows how evaporator and superheat spring pressure varies with temperature. Curve B shows the saturation pressure and corresponding temperature for the refrigerant in the system. Notice that the curvatures of Curves A and B are nearly identical, but that the pressure for Curve A is greater than the pressure in Curve B for any given temperature. The distance of the offset, Point *a* to Point *b*, is equal to the pressure added to Curve A by the superheat spring.

Curve C shows the pressure in the liquid cross-charged sensing bulb under varying temperatures. Since the sensing bulb is filled with a different refrigerant than the evaporator, its pressure/temperature curve has a different curvature than Curves A and B. The superheat added by the valve equals the distance between Points *a* and *c*. Note that the superheat is greater when the evaporator is warm and is greatly reduced as the evaporator is cooled. Because Curve C (sensing bulb pressure) is fairly straight and Curve A (evaporator and spring pressure) is more curved, the valve will be more sensitive to changes in suction pressure than to changes in the sensing bulb temperature.

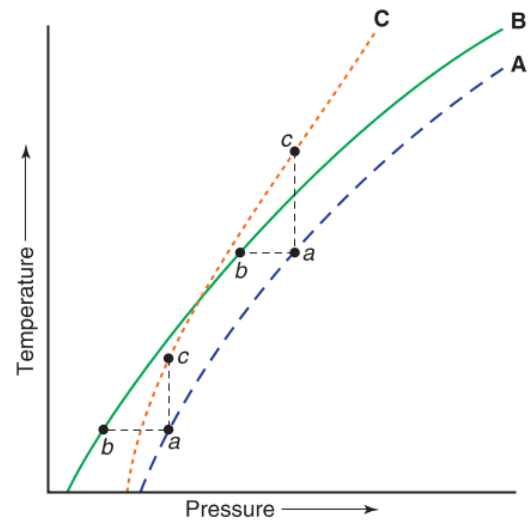

Goodheart-Willcox Publisher

Figure 20-17. Graph showing the behavior of a liquid cross-charged sensing bulb designed for an application within a specific temperature range. It provides a rapid pull-down and is used for normal refrigeration. The superheat value at the top end is high, which prevents any flooding of the unit. Curve A represents the evaporator pressure plus superheat-spring pressure under varying temperatures. Curve B shows the saturation pressure and corresponding temperature for the refrigerant in the system. Curve C represents sensing bulb pressure graphed against temperature. Line *ab* represents the superheat spring pressure. Line *ac* represents the valve superheat.

This type of valve closes quickly when the compressor stops. This happens because the evaporator pressure increases faster than sensing bulb pressure as the evaporator warms. As the suction pressure is reduced, the superheat is reduced, thus using maximum evaporator surface. Hunting is reduced because the pressure-temperature curve of the sensing bulb is flatter, resulting in faster valve reaction. **Figure 20-18** shows the difference in the performance curve of a cross-charged sensing compared to a liquid-charged sensing bulb.

Gas-Charged Sensing Bulb

A gas-charged sensing bulb uses the same refrigerant as the system. The amount of charge is such that all the liquid is vaporized at a predetermined temperature. Increasing the temperature above this point causes a much slower increase in element pressure. As a result, the expansion valve does not open any further with an increase in the cabinet temperature. However, if the valve body becomes colder than the sensing bulb, the vaporized control fluid condenses in the valve body. Control is lost, and the valve closes. Gas-charged elements are designed for a temperature range from 30°F to 60°F (–1.1°C to 15.6°C).

Copyright Goodheart-Willcox Co., Inc.

For example, if just enough control fluid is put into the sensing bulb to produce a maximum pressure of 40 psig (280 kPa), the sensing bulb pressure will not significantly exceed this limit, even under the highest possible system temperatures. When the low-side pressure also reaches 40 psig, the valve will not open any further. Thus, low-side pressure will not have to operate above 40 psi, **Figure 20-19**.

Thermostatic expansion valves with gas-charged sensing bulbs require that the diaphragm and the sensing bulb capillary tube be kept at a temperature warmer than the bulb during the operating cycle. This is necessary so the valve will be controlled by the bulb. If the valve becomes colder than the bulb, the sensing bulb charge may condense in the diaphragm case. The pressure inside the entire sensing bulb will drop, even though the evaporator and bulb itself are warm. This will cause the valve to close, or throttle, even though evaporator conditions warrant the valve remaining open.

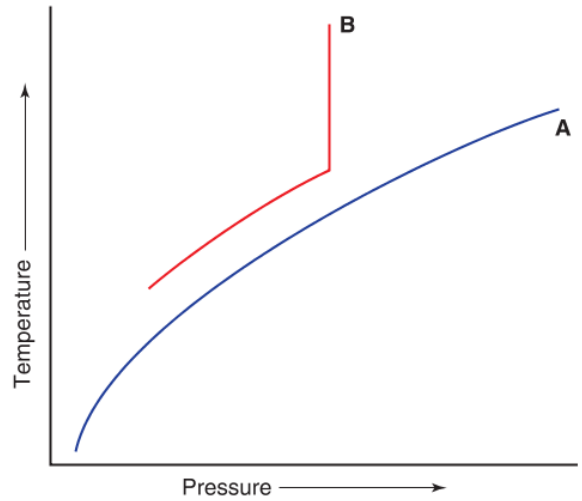

Goodheart-Willcox Publisher

Figure 20-19. Curve A in this graph shows the change in evaporator and superheat spring pressure under varying temperature. Curve B shows the gas-charged sensing bulb pressure under varying temperature. After the sensing bulb becomes warm enough to vaporize all refrigerant in the bulb (Point *a*), any additional heat applied to the sensing bulb raises the bulb temperature, but does not significantly increase pressure.

Gas Cross-Charged Sensing Bulb

The gas cross-charged sensing bulb is charged with a refrigerant different from the system refrigerant. The amount of charge is such that, at the desired temperature, all the refrigerant in the bulb is vaporized. Once all the refrigerant in the bulb is vaporized, the valve is at its maximum operating pressure. Increasing the temperature above this point does not significantly increase pressure in the sensing bulb.

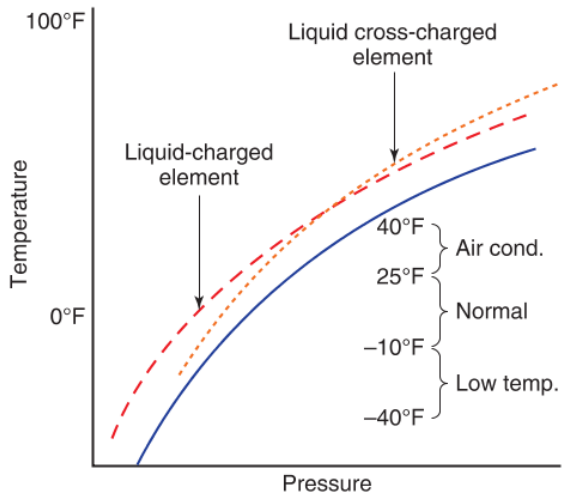

Goodheart-Willcox Publisher

Figure 20-18. Graph showing constant superheat of liquid cross-charged sensing bulb designed to be used for all three applications (low temperature, normal, and air conditioning) as compared to a liquid-charged sensing bulb in wide temperature ranges. The blue line shows system pressure and superheat spring pressure under varying temperature conditions. The red line shows pressure inside a liquid-charged sensing bulb under varying temperature. The orange line shows pressure conditions inside a liquid cross-charged sensing bulb under varying temperatures. The superheat produced by a liquid cross-charged element changes as temperature drops, but the superheat produced by a liquid-charged element remains constant as temperature drops.

Adsorption Gas Cross-Charged Sensing Bulb

Some types of gas cross-charged sensing bulbs depend upon a different principle. In thermostatic expansion valves with these sensing bulbs, the sensing bulb contains two substances. One is a noncondensing gas, such as carbon dioxide, that provides the pressure in the bulb. The other is a solid, such as carbon, silica gel, or charcoal, that has the ability to adsorb gas.

Adsorption is the adhesion of a layer of gas or liquid one molecule thick over the surface of a solid substance. There is no chemical combination between the gas and the solid substance (adsorber).

Pro Tip

Adsorption versus Absorption

Adsorption is often confused with absorption. *Adsorption* occurs when a thin layer of fluid (gas or liquid) adheres to a solid, but the two substances are not mixed together. *Absorption* occurs when two substances are mixed and become one substance.

Copyright Goodheart-Willcox Co., Inc.

The ability of a substance to adsorb gas depends upon the temperature. Substances more readily adsorb gas at low temperatures. As the sensing element warms, the pressure in the element will increase. This is due to the release of the adsorbed gas. As the sensing element cools, its pressure will decrease due to the adsorption of gas back to the solid substance. The pressure change controls the valve opening in the thermostatic expansion valve.

Thermostatic expansion valves with this type of sensing bulb have the advantage of a pressure-temperature lag in their operation. They have very wide temperature applications and may be used on any refrigeration or air-conditioning system.

Sensing Bulb Mounting

The location and mounting of the sensing bulb are very important. The sensing bulb must be in good thermal contact with the evaporator outlet, **Figure 20-20**. On systems with small-diameter horizontal suction lines, the sensing bulb should be mounted on the top of the suction line, as shown in **Figure 20-20A**. If the bulb is mounted on a vertical suction line, the capillary tube of the bulb should always enter from the top of the bulb, never from the bottom, **Figure 20-20B**.

The bulb must not be affected by the air or liquid being cooled. It should be wrapped in insulation so that only suction line temperature affects the bulb, as in **Figure 20-20C**. Special insulation forms are available that fit snugly around the sensing bulb, capillary tube, and suction line.

The bulb must have excellent thermal contact with the suction line. Some sensing bulbs are crimped or creased lengthwise to provide double contact and help align the sensing bulb with the surface of the suction line. See **Figure 20-21**.

The contacting surfaces of the tube and sensing bulb must be clean, and the connection must be tight. Both the suction line and the sensing bulb should be cleaned with steel wool before the sensing bulb is installed. Copper straps and non-rusting machine screws and nuts should be used to fasten the bulb to the suction line.

The suction line carries refrigerant that is mostly vaporized. However, there will be some droplets of liquid refrigerant and some oil. **Figure 20-22** shows conditions inside various types of suction lines. In **Figure 20-22A**, refrigerant vapor and some droplets of liquid refrigerant are flowing through a rather large diameter suction line. Due to the large diameter, the velocity of the vaporized refrigerant at times will be quite slow. The droplets of liquid refrigerant and oil will settle on the bottom of the line.

The diameter of the suction line in **Figure 20-22B** is smaller. As a result, the velocity of the vaporized refrigerant will be higher than in **Figure 20-22A**. This results in less separation of oil and liquid refrigerant from the flowing vapor. The inside of the tube will be uniformly coated with oil.

The suction line in **Figure 20-22C** is shown in vertical position. In this position, there will be no separation of the droplets of refrigerant from the vapor. However, the oil will uniformly coat the inside of the suction line.

In all cases, the temperature of the vaporized refrigerant and the droplets of liquid refrigerant will be a few degrees colder than the suction line surface.

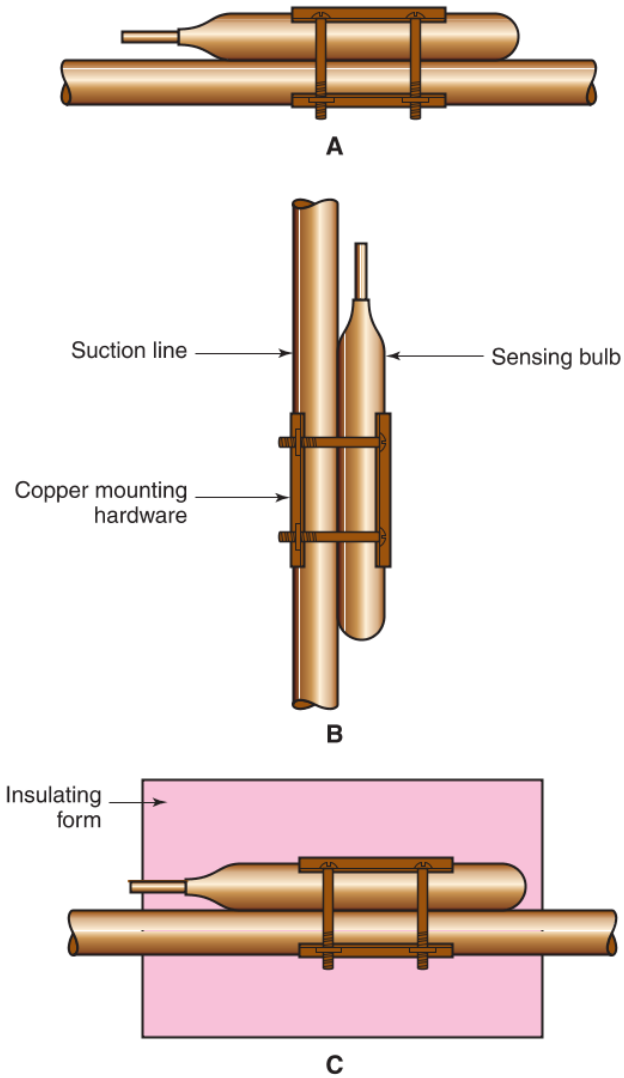

Goodheart-Willcox Publisher

Figure 20-20. Correct ways to attach a thermostatic expansion valve sensing bulb to a suction line. A—If possible, mount the sensing bulb in a horizontal position and on top of the suction line. B—If the sensing bulb must be mounted vertically, make sure the capillary tube from the valve enters the sensing bulb from the top, not the bottom. C—The sensing bulb should be properly insulated to prevent the air surrounding it from affecting its temperature.

Copyright Goodheart-Willcox Co., Inc.

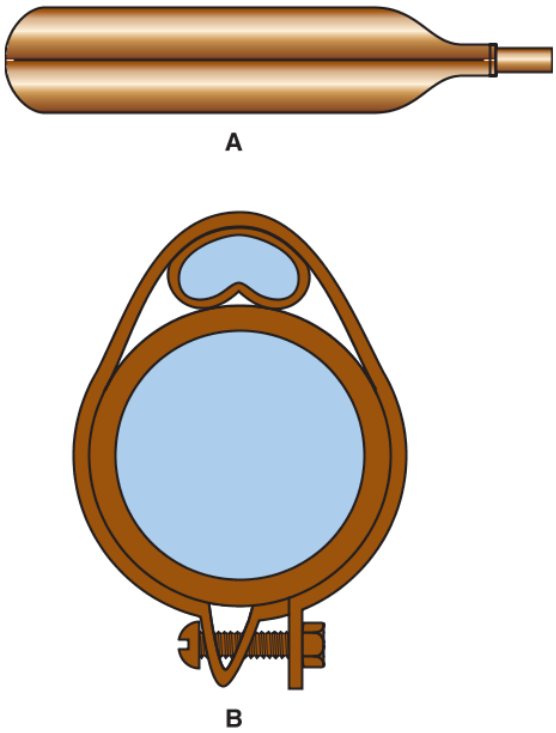

Goodheart-Willcox Publisher

Figure 20-21. Crimped sensing bulb. A—The crimp runs along the bottom centerline of the sensing bulb. B—A crimped sensing bulb contacts the suction line at two points rather than one.

This is due to the insulating quality of the oil that coats the inside of the suction line. This is why proper mounting of the sensing bulb is critical.

20.4.3 Thermostatic Expansion Valve Capacities

The capacity of a thermostatic expansion valve (TXV) varies according to following characteristics:

- Orifice size.
- Pressure difference between the high side and the low side.
- Temperature and condition of the refrigerant in the liquid line.

The capacity of most thermostatic expansion valves is based on the size of the orifice and the pressure difference between the high side and low side of the system. The same valve body may be used for many capacities. The larger the orifice, the more liquid refrigerant can be fed into the evaporator in a given time. Valve assemblies are rated in tons of refrigeration. However, the same orifice usually has three different tonnage capacities. This capacity range depends on the pressure difference between the high side and the low side. Increasing this pressure difference will increase the rate of refrigerant flow.

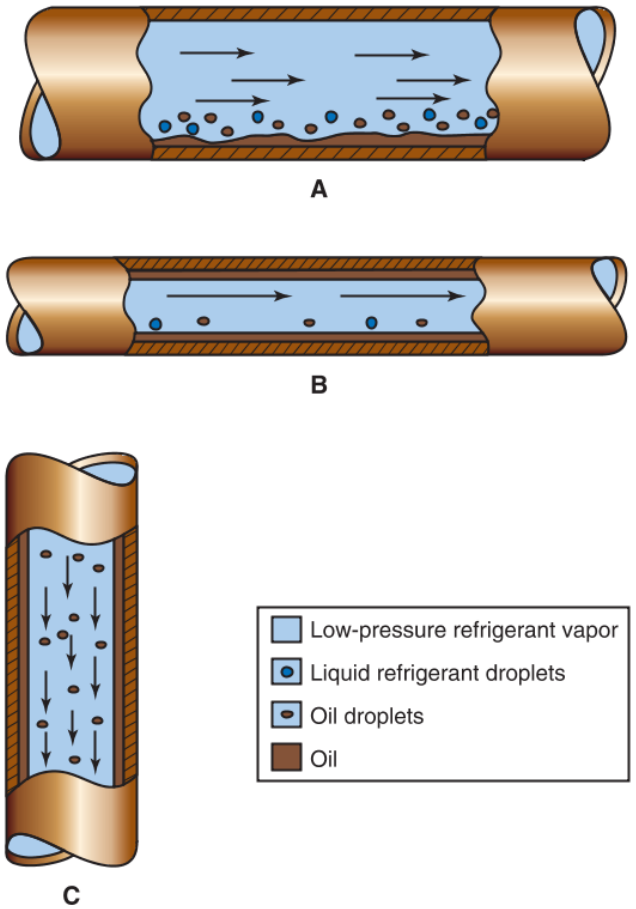

Goodheart-Willcox Publisher

Figure 20-22. Flow conditions in various suction lines. A—A large-diameter horizontal suction line. B—A small-diameter horizontal suction line. C—A large-diameter vertical suction line.

It is important to use a valve of the correct capacity. With an undersized valve orifice, the evaporator will be starved regardless of the superheat setting. The full capacity of the evaporator cannot be reached. If the orifice is oversized, the valve will hunt, or surge. When the valve opens, too much refrigerant will pass into the evaporator. The suction line will sweat or frost before the sensing bulb can close the valve. Increasing the superheat setting to correct this condition results in the evaporator being starved much of the time.

20.4.4 Special Thermostatic Expansion Valves

Most HVACR systems use a standard TXV with a single inlet, outlet, and sensing bulb. However, some system designs require special TXVs to accommodate

Copyright Goodheart-Willcox Co., Inc.

high system capacities, multiple evaporators, or large variations in operating conditions. Many different thermostatic expansion valve designs are available to fit specific applications.

Distributors

Some systems have a refrigerant distributor connected to the metering device. A ***distributor*** is a device that splits the flow of refrigerant into several paths. Such a design is used to reduce the pressure drop in a large evaporator.

In a system with a distributor, there are separate circuits or paths within the evaporator. Separate small tubes run from the inlet of each of these circuits to the distributor. The outlet of each circuit is connected to a manifold that feeds a single suction line, **Figure 20-23**.

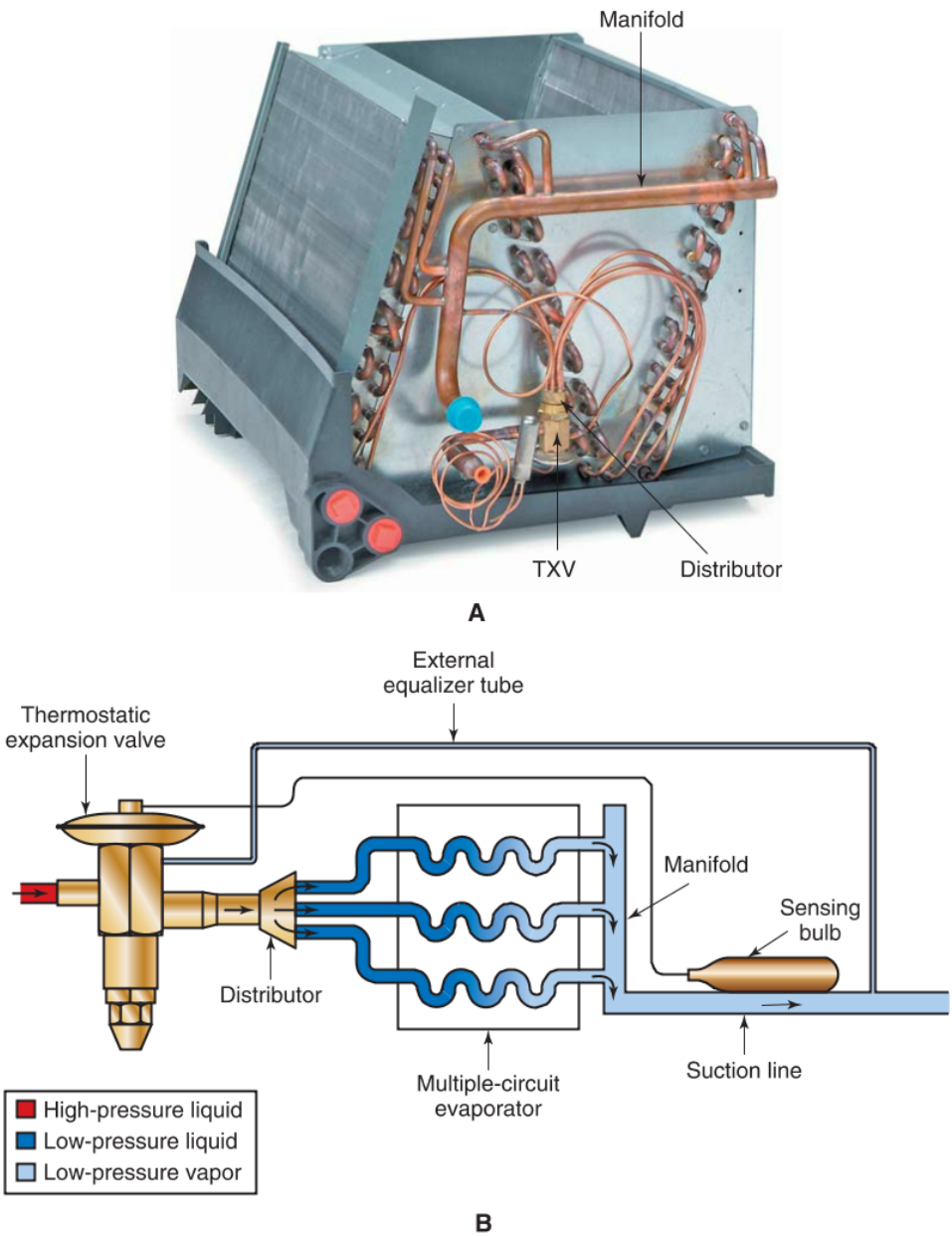

Rheem Manufacturing Company; Goodheart-Willcox Publisher

Figure 20-23. A thermostatic expansion valve equipped with a distributor provides multiple connections to evaporator. A—This distributor feeds six separate circuits within the evaporator coil. B—Output from the TXV is equally distributed to separate circuits in the evaporator.

Copyright Goodheart-Willcox Co., Inc.

Because the refrigerant flows through shorter, separate paths in the evaporator rather than one long path, the pressure drop across the evaporator is reduced. The reduced pressure drop results in a more consistent temperature across the entire surface of the evaporator. This is a popular design for air conditioning applications.

Systems that use a distributor must be carefully designed so that each evaporator circuit receives an equal amount of refrigerant. Distributors are available with varying numbers of outputs and different tubing sizes for different applications, **Figure 20-24**.

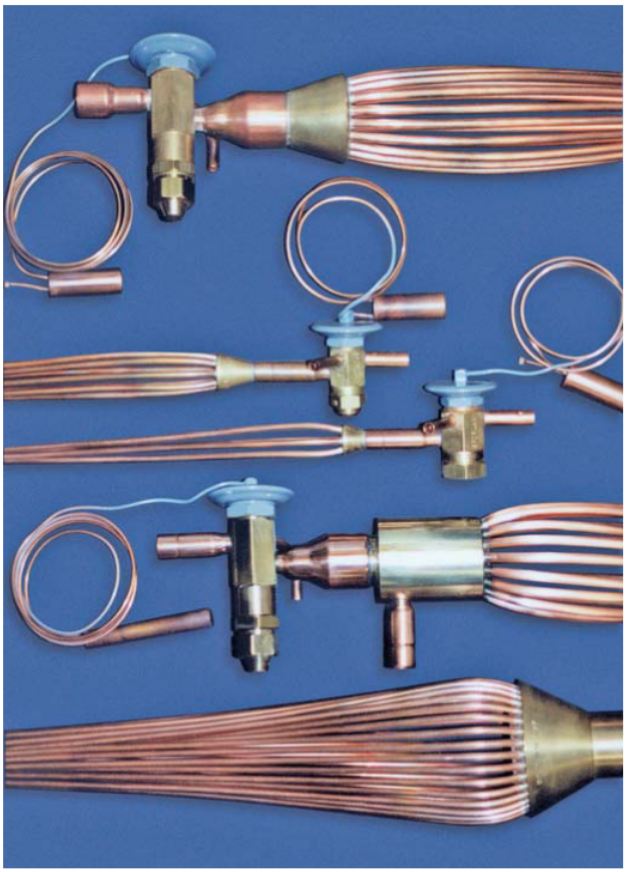

Courtesy of Sporlan Division - Parker Hannifin Corporation

Figure 20-24. Distributors are available in a wide range of capacities for different applications.

Pressure Limiters

Sometimes, a pressure-limiting expansion valve is used to prevent overloading the condensing unit. The maximum operating pressure (MOP) for the system can be set by using a thermostatic expansion valve equipped with a gas-charged sensing bulb, a gas cross-charged sensing bulb, or a mechanical pressure limiter.

Mechanical Pressure Limiters

Pressure limiters are devices within the TXV that prevent the evaporator pressure from exceeding a safe operating limit. A pressure limiter is placed between the sensing element and the needle valve. One type of mechanical pressure limiter is composed of a diaphragm and a spring. It is designed to collapse at a certain pressure. Thus, if the pressure limiter is designed to collapse at 40 psig (377 kPa), the valve will close if the low-side pressure exceeds this amount, regardless of the evaporator temperature and pressure. During the Off cycle, the suction pressure is kept below the pressure limit. This ensures that the compressor is not required to pull down high pressure at start-up. Expansion valves equipped with this type of pressure limiter offer rapid pull down on start-up and thus require less torque at the compressor. See **Figure 20-25**.

In a pressure-limiting thermal expansion valve, a gas-charged element provides a limit to the pressure that will open the valve. The gas used is non-condensable and obeys Charles' and Boyle's Laws. When the low-side pressure exceeds a certain set value, the diaphragm within the element will collapse. Since the valve will not open again until the low-side pressure drops below the limit, the system can quickly pump down to a normal low-side pressure.

Another type of pressure-limiting thermostatic expansion valve has an adjustable pressure limiter. Above a certain pressure setting, the spring compresses the diaphragm, closing the valve, **Figure 20-26**.

Frequently, it is necessary to have two different pressure levels controlling a given valve. A control valve with two pilot pressure regulators is called a ***dual-pressure regulator***. This system uses a switching mechanism for the selection of either high-pressure or low-pressure control.

MOP Thermostatic Expansion Valves

A maximum operating pressure (MOP), or pressure limit, may also be achieved using a thermostatic expansion valve equipped with a gas-charged sensing bulb. As explained previously, when a gas-charged sensing bulb reaches a predetermined temperature, all refrigerant in the bulb is vaporized. Any increase in bulb temperature above the predetermined value causes little or no increase in bulb pressure. This pressure limit is the maximum pressure under which the expansion valve can remain open, and is referred to as the valve's MOP setting. The MOP setting of a gas-charged TXV is comparable to the pressure-limit setting of a mechanical pressure limiter.

There are two operational differences between ***MOP thermostatic expansion valves*** (those equipped with a gas-charged sensing bulb or mechanical pressure limiter) and non-MOP thermostatic expansion valves. The first difference is that MOP thermostatic expansion

Copyright Goodheart-Willcox Co., Inc.

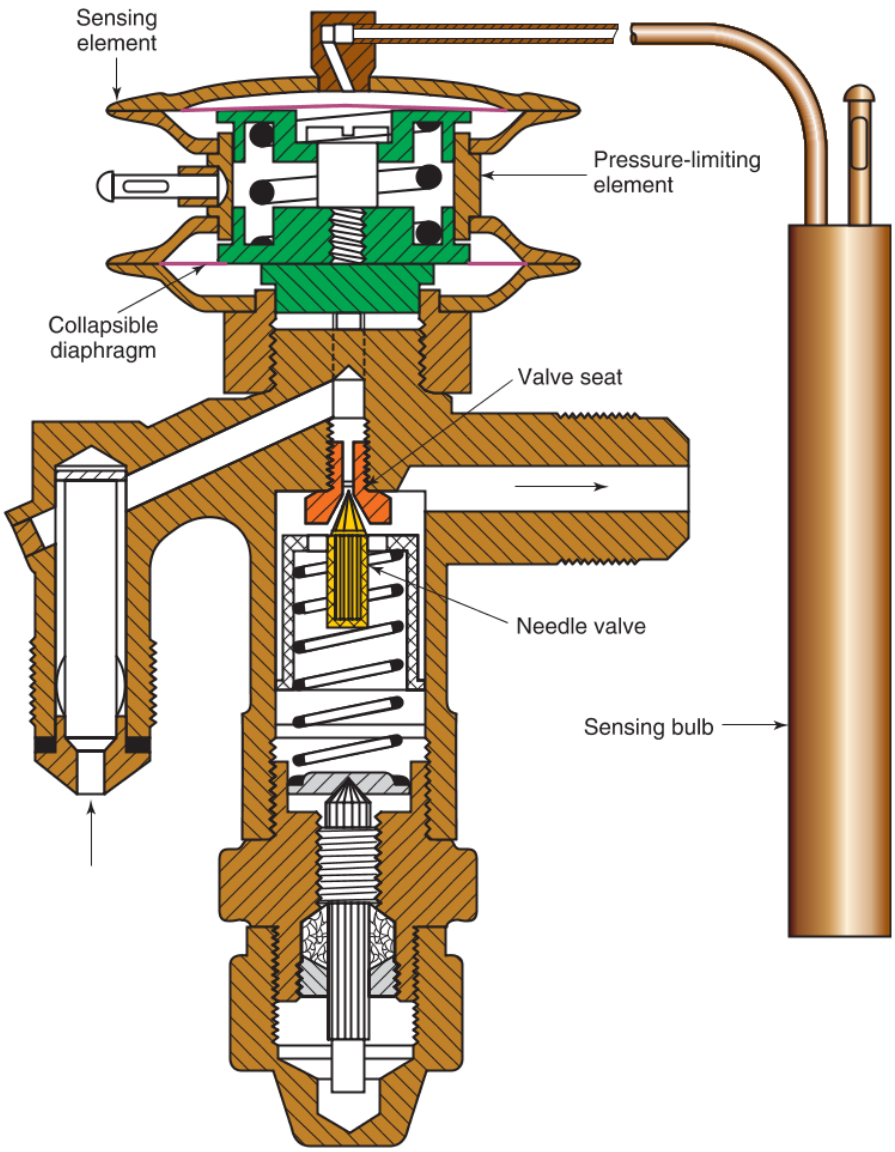

Goodheart-Willcox Publisher

Figure 20-25. Thermostatic expansion valve equipped with a mechanical pressure limiter. The pressure-limiting element consists of two diaphragms and a spring. Whenever suction pressure gets near the motor overload point, the spring between the two diaphragms compresses and the valve reduces the flow of refrigerant to the evaporator.

valves close tightly during the Off cycle. As the evaporator warms up in the Off cycle, the maximum operating pressure is reached. An increase in sensing bulb temperature will not open the valve. Assisted by the spring pressure (closing pressure), the valve stays tightly closed.

The second difference is that MOP thermostatic expansion valves remain closed during pull-down. Although temperatures and pressures are relatively high in the evaporator during pull-down, the valve remains closed until pressure drops below the MOP. This delay in valve opening permits rapid pull-down and prevents flood back and overloading of the compressor motor.

MOP thermostatic expansion valves are used with comfort cooling systems. They are also used with indoor and outdoor coils found in heat pumps.

Pilot-Controlled Thermostatic Expansion Valves

Some large refrigeration installations (50 tons and over) may use a pilot-controlled thermostatic expansion valve. In these installations, a conventional thermostatic pilot valve is mounted on a large auxiliary

Copyright Goodheart-Willcox Co., Inc.

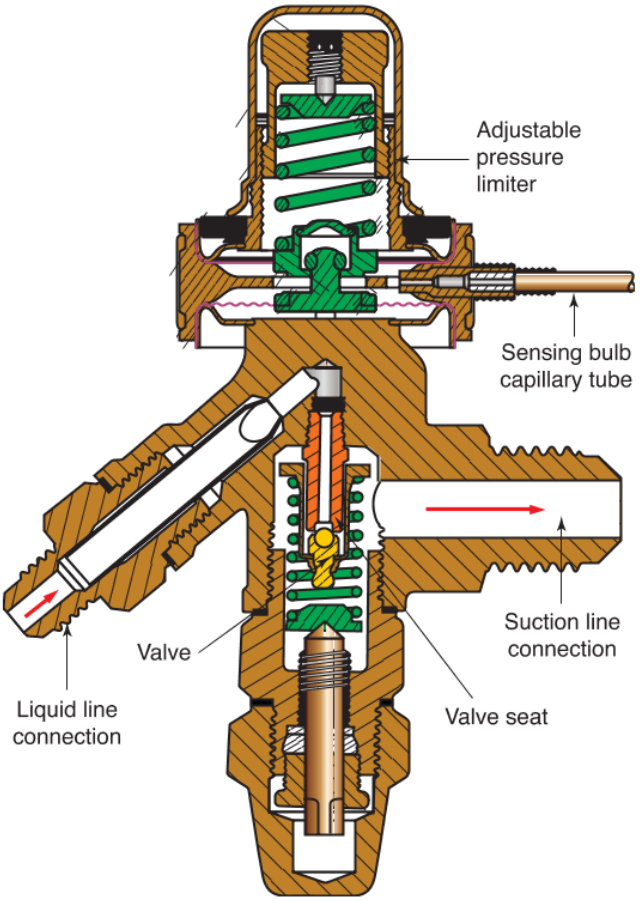

Goodheart-Willcox Publisher

Figure 20-26. Thermostatic expansion valve equipped with an adjustable pressure limiter.

valve body. The thermostatic pilot valve regulates the pressure that operates the larger valve.

20.5 Automatic Expansion Valves (AXVs)

An ***automatic expansion valve (AXV)***, or pressure-controlled expansion valve, is a metering device that operates based on low-side pressure. The valve throttles the liquid refrigerant in the liquid line down to a constant pressure. A basic refrigeration system with an automatic expansion valve metering device is shown in **Figure 20-27**.

In this example, the compressor, motor, and condenser (condensing unit) are in the base of the cabinet. Notice that there is no sensing bulb attached to the automatic expansion valve. Unlike a TXV, an AXV does not control superheat. It controls only low-side pressure. Refrigerant can flow through an AXV only if the evaporator pressure is reduced below a preset level.

20.5.1 Automatic Expansion Valve Operation

An automatic expansion valve increases refrigerant flow when evaporator pressure drops and decreases flow when evaporator pressure increases. This action maintains constant pressure in the evaporator whenever the system is running. As the compressor runs, liquid refrigerant flows through the automatic expansion valve and is sprayed into the evaporator. Here, due to low pressure, the refrigerant boils rapidly and absorbs heat. This vaporized refrigerant moves back to the compressor through the suction line.

In the compressor, the refrigerant vapor is compressed to high-side pressure and pumped into the condenser. While flowing through the condenser, the

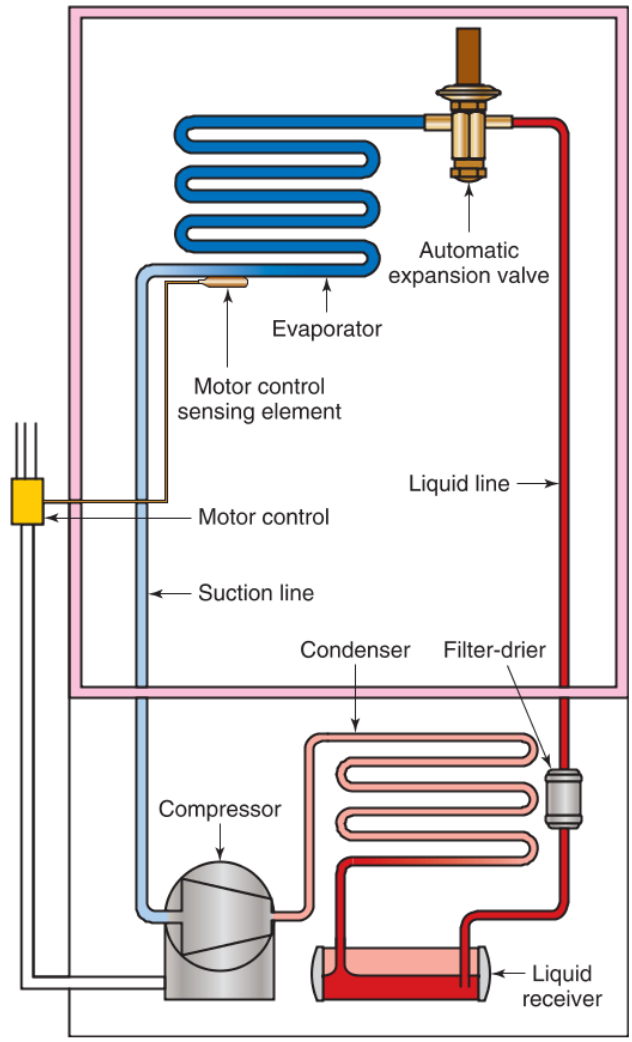

Goodheart-Willcox Publisher

Figure 20-27. Compression refrigeration system that uses an automatic expansion valve.

Copyright Goodheart-Willcox Co., Inc.

vapor is cooled. The refrigerant gives up the heat that it absorbed in the evaporator and returns to a liquid. It then flows into the liquid receiver, ready to repeat the cycle.

The motor control thermal element is clamped to the outlet of the evaporator. When the evaporator is cooled to its proper temperature, the motor control turns off current to the compressor motor. After the compressor stops and pressure in the evaporator rises, the automatic expansion valve closes.

A system using an automatic expansion valve is sometimes called a dry system because the evaporator is never filled with liquid refrigerant, but with a mist or fog. Because the automatic expansion valve is operated by low-side pressure alone, the system operates independently of the amount of refrigerant in the system. This type of system is used widely in small commercial applications.

These expansion valves are adjustable. They permit the opening of the valve over a wide range of pressures. Automatic expansion valves must be adjusted for atmospheric pressure, which affects their operation. High altitudes will cause a decrease in atmospheric pressure. The adjusting screw must be turned in (increasing opening spring tension) to make up for the lower atmospheric pressure. Refrigerants with different evaporating pressures have different expansion valve settings.

It is important to remember that the valve capacity should equal the evaporator capacity. For example, a one-ton expansion valve is used with a one-ton capacity condensing unit. An under-capacity valve tends to starve an evaporator (too little refrigerant gets through). An overcapacity valve tends to allow too much refrigerant into the evaporator when the valve opens. This may cause sweat back or ***frost back*** on the suction line. The terms sweat back and frost back refer to the accumulation of condensation on the suction line due to the difference in the line temperature and ambient temperature.

Pro Tip

Expansion Valve Leaks

A faulty valve or seat in an expansion valve assembly will allow refrigerant to leak during the Off cycle. This could allow liquid refrigerant to flow into the suction line. When the compressor starts, this will be indicated by frosting of the suction line. The presence of liquid refrigerant in the suction line may result in liquid refrigerant being drawn into the compressor. This can cause the compressor to knock severely and may cause compressor damage.

20.5.2 Automatic Expansion Valve Design

There are many different designs of automatic expansion valves. The flexible part can be either a diaphragm or a bellows. Usually, it is made of phosphor bronze and is soldered or brazed to the valve body. Flexible elements must move in and out time after time without losing flexibility. The valve body is usually drop-forged brass, but sometimes it is cast. It must be leak proof. The liquid inlet has a soldered connection, standard flange, flared connection, or pipe thread. The liquid inlet is usually equipped with a screen, designed for easy removal.

Figure 20-28 is an external view of an automatic expansion valve. An arrow indicating flow direction is often stamped on an AXV to ensure proper installation. A protective cap can be screwed on over the adjusting knob. The cap prevents the adjusting knob from being accidentally moved. The valve capacity is often stamped on this cap. An O-ring below the cap threads provides an airtight seal around the cap. This prevents debris from entering the diaphragm housing and seals in atmospheric pressure.

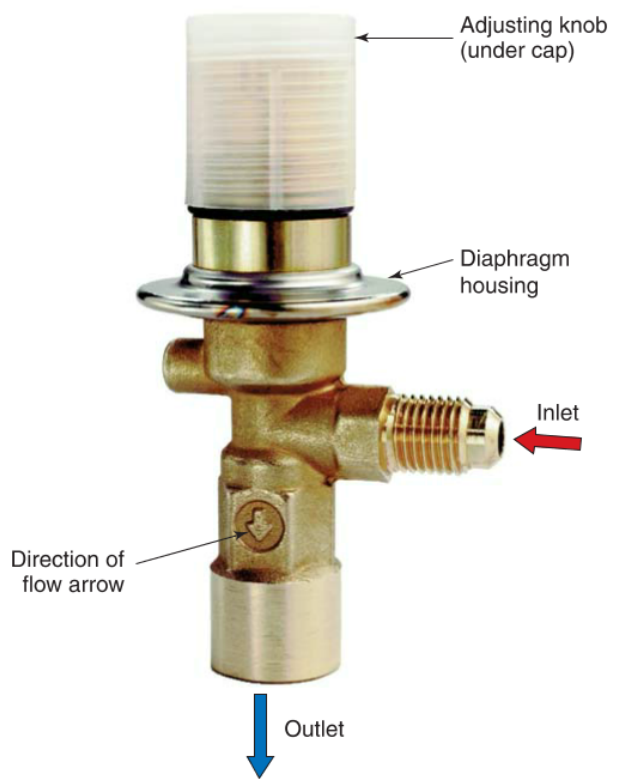

Courtesy of Sporlan Division - Parker Hannifin Corporation

Figure 20-28. Typical diaphragm-type automatic expansion valve.

Copyright Goodheart-Willcox Co., Inc.

Bellows-Type Automatic Expansion Valve

Figure 20-29 is a simple drawing of a typical bellows-type automatic expansion valve. In this type of valve, a flexible bellows is linked to a needle valve. Atmospheric pressure or pressure from a confined gas (P_1) is inside the bellows. Evaporator pressure (P_2) is pushing against the bellows. Adjusting screw spring force (F_1) combines with the atmospheric or confined gas pressure (P_1) and the liquid line pressure (P_3) to open the valve. Force from a different spring (F_2) combines with evaporator pressure (P_2) to close the valve. In some variations of this design, the liquid line pressure (P_3) is applied perpendicular to the needle valve and, therefore, does not contribute any force to opening or closing the valve.

As the evaporator pressure decreases, the pressure difference forces the bellows toward the valve body. Since the needle valve is linked to the bellows, it is forced away from its seat. Some liquid refrigerant sprays into the evaporator. Because the refrigerant evaporates at a constant low pressure, the evaporator and cabinet temperature stay within design limits.

Diaphragm-Type Automatic Expansion Valve

Diaphragm automatic expansion valves have stops to prevent too great a movement of the diaphragm. The diaphragm often has concentric corrugations (ripples) to improve its flexibility. See **Figure 20-30**.

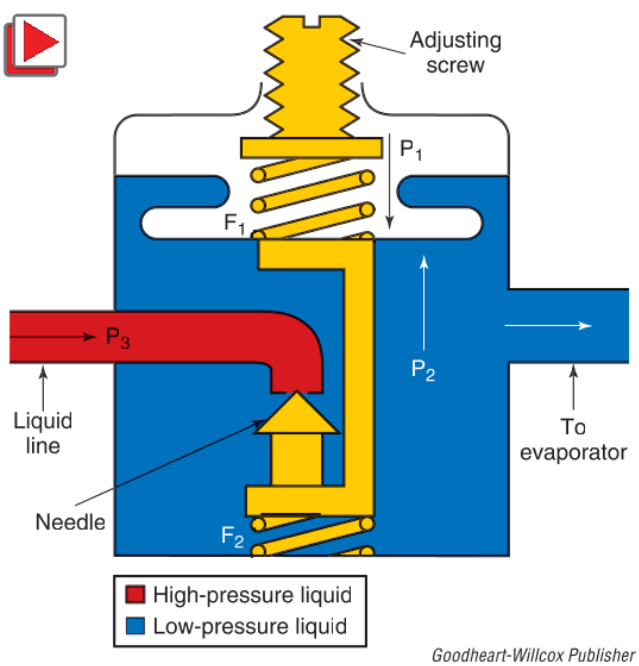

Goodheart-Willcox Publisher

Figure 20-29. Simple drawing of a bellows-type automatic expansion valve showing the various pressures inside the valve that control its operation. P_1—Atmospheric or confined gas pressure. P_2—Evaporator pressure. P_3—Liquid line pressure. F_1—Adjustable-pressure (opening) spring. F_2—Nonadjustable-pressure (closing) spring.

The diaphragm separates the atmospheric pressure and the system pressure. Four basic forces control the operation of the valve. Force 1 is the adjustable range spring. Force 2 is atmospheric pressure. These forces work together to move the diaphragm down, opening the valve. Force 3 is the evaporator pressure underneath the diaphragm. Force 4 is applied by the closing spring, which pushes up on the diaphragm. These forces work together to move the push rod and ball assembly up, closing the valve. When Force 1 and Force 2 are greater than Force 3 and Force 4, the valve opens. When Force 3 and Force 4 are greater than Force 1 and Force 2, the valve closes.

Another diaphragm expansion valve design is shown in **Figure 20-31**. The diaphragm movement is limited by the body and the adjusting screw. Threads fasten the diaphragm assembly to the body of the valve. A tightly fitted cap or cover plate, which protects the pressure adjustment, can be removed to adjust the valve.

The diaphragm has a disk on the valve side. This disk presses on a pin that moves the ball valve away from its seat. When the low-side pressure increases, the diaphragm moves against the adjustment spring. This allows the spring at the ball valve to push the ball valve against the seat.

As already mentioned, automatic expansion valves can be adjusted to the correct evaporator pressure. Turning the adjustment clockwise increases the rate of flow, thereby increasing the low-side pressure. Turning the adjustment counterclockwise decreases the flow rate, decreasing low-side pressure.

Automatic Expansion Valve Bleeder or Bypass

Unless the automatic expansion valve used in a system is equipped with a bypass or bleeder, the high-side and low-side pressures will not balance during the Off cycle. This means that the compressor must start while under load.

Many compressor units are designed to start only under a low load (low-torque) condition, as when low-side and high-side pressures are equal. The equal pressures allow the compressor to start without pushing against a high pressure. Therefore, the motor will require less starting torque.

Automatic expansion valves seal the refrigerant orifice during the Off cycle. To balance pressures, some automatic expansion valves are equipped with an opening designed to allow refrigerant to slowly leak past the valve when it is closed. Typically, a small V-shaped slot is made into the valve seat. The bypass, or bleeder, openings are quite small. They do not interfere with the operation of the valve when the compressor is running, **Figure 20-32**.

Copyright Goodheart-Willcox Co., Inc.

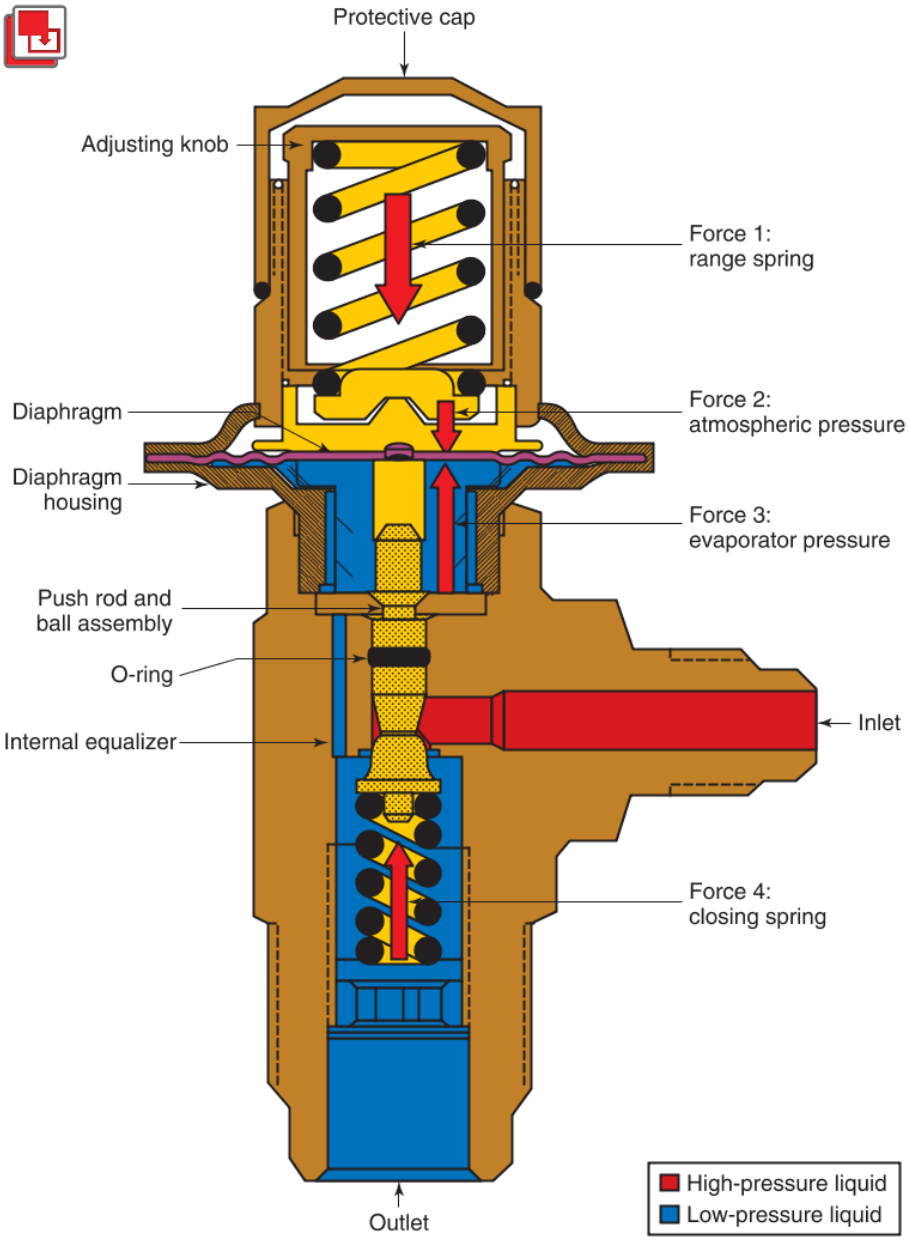

Courtesy of Sporlan Division - Parker Hannifin Corporation

Figure 20-30. Cross section of a diaphragm automatic expansion valve, showing the forces that control operation of the valve. Force 1 is applied by the adjustable range spring. Force 2 is atmospheric pressure. Force 3 is evaporator pressure. Force 4 is applied by the closing spring. The valve is designed to control the flow of refrigerant to the evaporator, maintaining a constant evaporator pressure.

If this type of expansion valve is used in a system, its compressor can be driven by a low-torque motor. However, such a system must be charged with the correct amount of refrigerant, and the evaporator outlet must have an accumulator. Otherwise, liquid refrigerant could travel down the suction line. This could cause sweating or frosting on the suction line. Also, dangerous liquid refrigerant slugging could occur in the compressor.

20.6 Electronic Expansion Valves (EEVs)

Another type of expansion valve that is becoming more popular is the ***electronic expansion valve (EEV)***. In this type of expansion valve, an electric operator is used instead of the diaphragm power assembly of a TXV or the spring assembly of an AXV. There have

Copyright Goodheart-Willcox Co., Inc.

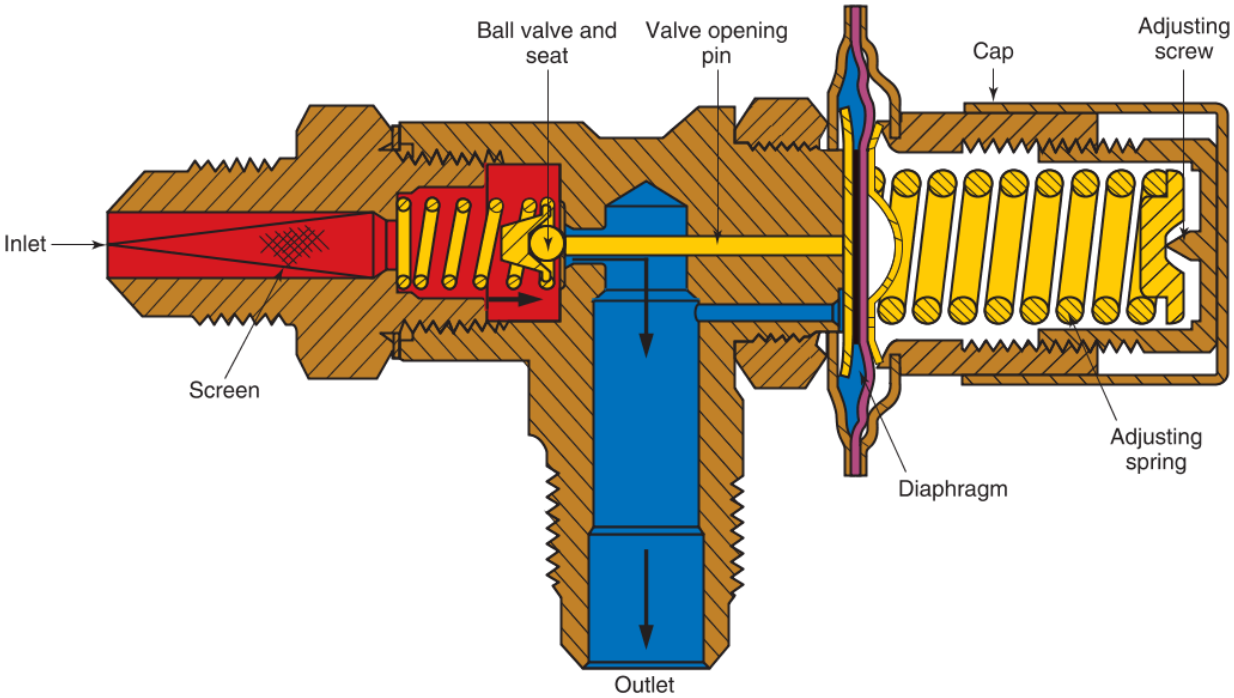

Goodheart-Willcox Publisher

Figure 20-31. Cross section of another typical automatic expansion valve. Directional arrows indicate the flow of refrigerant through the valve.

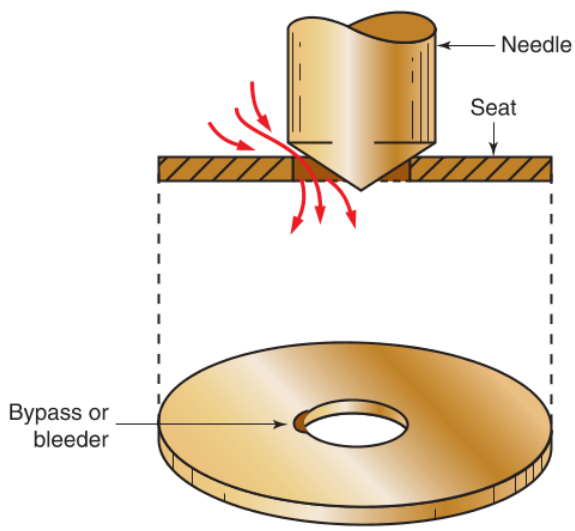

Goodheart-Willcox Publisher

Figure 20-32. Type of needle valve and seat used in a bypass or bleeder automatic expansion valve. The notch in the valve seat permits pressures to balance during the Off cycle. However, because the notch is small, it does not affect the normal operation of the valve during the On cycle.

been a number of electric operators used over the years, including heat motors and magnetic operators. However, the most common in modern systems is a stepper motor operator.

20.6.1 Stepper Motor EEVs

In stepper motor EEV, a small stepper motor is used to drive the pin or piston that operates the valve. The stepper motor may either operate the valve directly through its shaft, or it may transmit its power through a gear train, which increases the torque. See **Figure 20-33**.

The stepper motor responds to electric signals sent by a controller by rotating a small, precise, and repeatable amount. This may be as little as one twenty-fourth of a complete revolution or 15°. A lead screw translates the rotary motion of the stepper motor into the linear (back and forth) motion needed to open and close the valve port.

The lead screw is a threaded rod connected to the stepper motor so that it rotates when the motor rotates. A piston, or drive nut, with internal threads rides on the lead screw. The piston is splined on the outside or is prevented from rotating in some other way. Because the piston cannot rotate with the lead screw, it is drawn forward on the lead screw threads as the screw turns

Copyright Goodheart-Willcox Co., Inc.

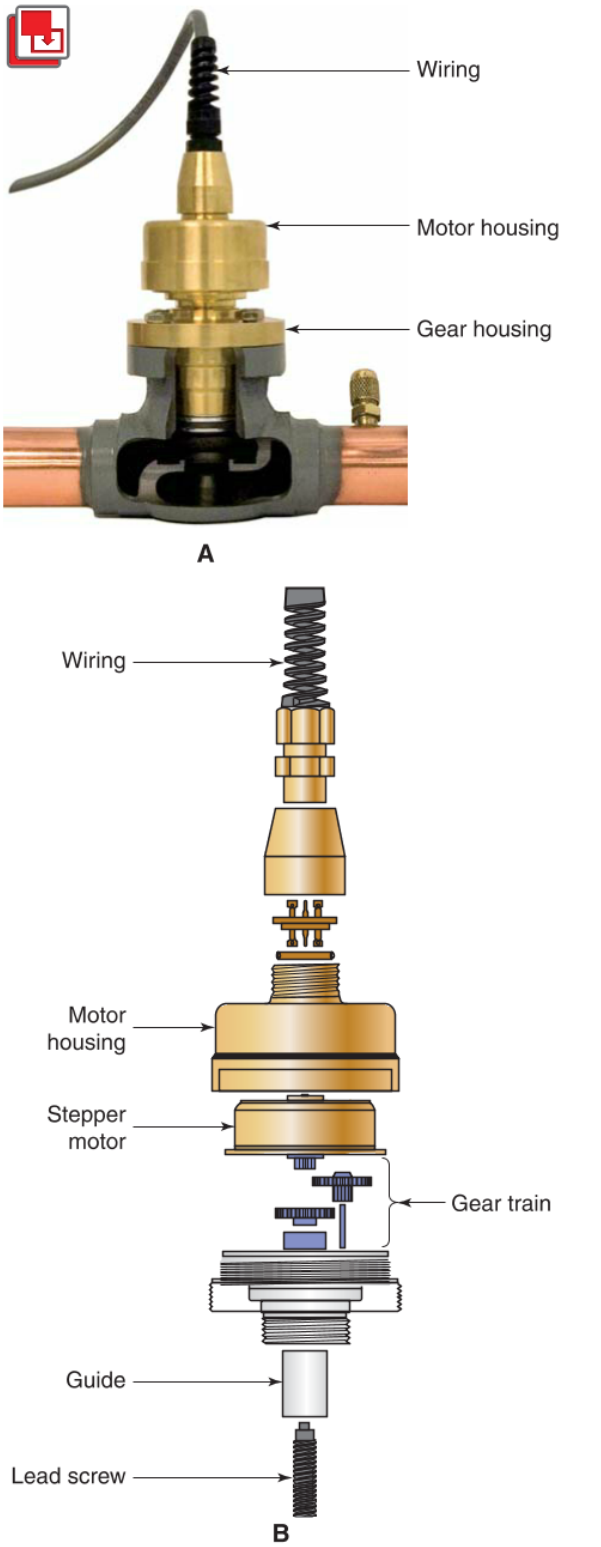

Courtesy of Sporlan Division - Parker Hannifin Corporation

Figure 20-33. In this electronic expansion valve, the small stepper motor and gears drive a pin against the port. A—A cutaway of the valve. B—An exploded diagram showing the inner working parts.

in one direction and backward on the threads as the screw turns the other direction, **Figure 20-34**.

Since the direction of valve travel is based on the direction of rotation of the stepper motor and lead screw, the stepper motor can open the valve, close the valve, or modulate the valve's position. Since this rotation is so precise and repeatable, the controller can precisely position the valve for optimum flow under widely varying load conditions.

Although the EEV is electrically driven and is electronically controlled, it performs the same function as a thermostatic expansion valve, restricting superheat to a desired setting. Superheat is the temperature difference between the inlet of the evaporator and the outlet of the evaporator. As with a thermostatic expansion valve, the inputs used by an electronic expansion valve are low-side pressure and temperature at the evaporator outlet. The pressure reading is supplied from a pressure transducer connected to the suction line, usually by an SAE or flare connection. See **Figure 20-35**.

A pressure transducer is a device that converts pressure into an electrical signal the controller can use.

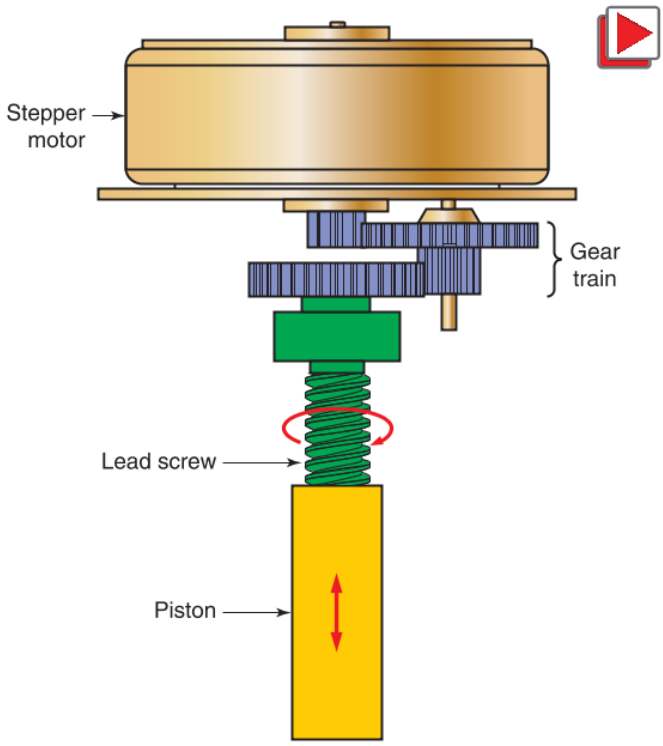

Courtesy of Sporlan Division - Parker Hannifin Corporation

Figure 20-34. Inner parts of a stepper motor electronic expansion valve. The lead screw is turned by the stepper motor. As the lead screw turns, threads on the bottom of it mesh with internal threads in the piston, causing the piston to move up or down.

Copyright Goodheart-Willcox Co., Inc.

Emerson Climate Technologies

Figure 20-35. A pressure transducer measures pressure at the evaporator outlet and sends a corresponding signal to the controller.

The evaporator temperature input is sent to the valve controller from a temperature sensor mounted on the suction line near the evaporator outlet. A temperature sensor is an electrical device used to measure temperature. Often this is a thermocouple or thermistor.

Both the pressure transducer and the temperature sensor are placed on the suction line in the same location where the sensing bulb and external equalizer lines would be installed in a TXV system. The controller is placed nearby and receives the pressure and temperature signals. See **Figure 20-36**.

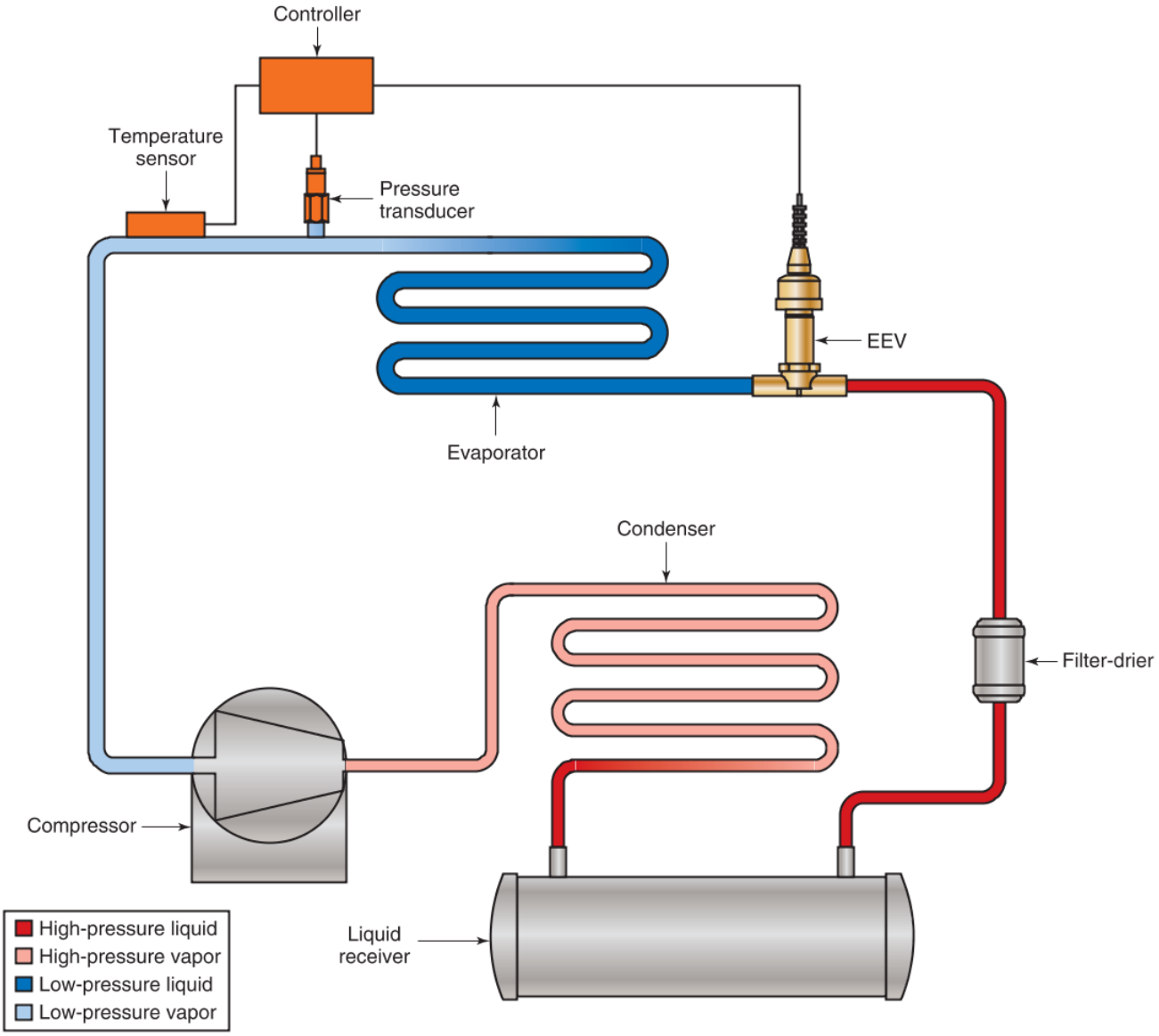

Goodheart-Willcox Publisher

Figure 20-36. An EEV system uses a pressure transducer and a temperature sensor to send data to the EEV controller, which calculates the valve response needed to achieve or maintain the preset superheat.

Copyright Goodheart-Willcox Co., Inc.

An EEV's controller is an electronic device that receives the temperature and pressure signals, uses them to calculate the proper valve response, and then sends commands to the stepper motor. Once the pressure and temperature information is received by the controller, the controller's microprocessor calculates superheat using an internal pressure-temperature table. Most controllers include the pressure-temperature tables for a number of refrigerants. The correct one for the application can be selected by the user, **Figure 20-37**.

The controller modulates the valve to maintain the desired superheat, which is set by the user. The controller does this using an algorithm that calculates the specific position of the valve pin or piston required to allow the correct amount of refrigerant flow. Algorithms can be complex and specific to an application and are usually held by the controller manufacturer as proprietary information or even patented.

Additional inputs that may be given to the controller include pump-down signals for defrosting or stopping the system, and additional temperature sensors for ambient or room temperature monitoring.

with permission from Carel Industries - all right reserved

Figure 20-37. The controller processes signals from the sensors and sends control signals to the EEV when adjustments are needed. Some have displays showing measured superheat and the percent that the valve is open.

The controller is typically supplied with 24 Vac from an external transformer. The 24 Vac are converted, on the PC board, into the 12 Vdc the valve motor requires and the 3 to 5 Vdc that the electronic components need.

The stepper motors used in refrigeration valves provide no position feedback to the controller. When first powered, the controller will send the valve more steps than the valve can use. This overdriving routine is called ***initialization***. It is done to ensure that the valve is fully closed and at its zero open position. Subsequent opening or closing commands are based on this zero position.

If properly configured and applied, the stepper motor will precisely respond to the number of step commands it receives. To prevent accumulation of missed steps, the controller occasionally may drive the valve fully shut and then furnish the valve with additional steps, similar to initialization but without as many steps. This will re-establish the zero position and allow the valve to correct any lost accuracy. Since the valve mechanism was designed for this type of operation, the overdriving and initialization will not damage the valve or controller.

Because the stepper motor will maintain its position when power is removed, the motor does not need to be constantly energized. While this saves energy during normal operation, a power interruption to the system will not automatically close the valve. In critical applications where refrigerant migration during a power failure may be harmful to the system, a solenoid valve in the liquid line closes during the loss of power to the system, preventing refrigerant migration.

Due to their programmable controls, precise control of refrigerant flow, and responsiveness, EEVs can be applied into an HVACR system in multiple ways. Primarily they are used as the system's metering device, controlling flow from high side into the low side. However, EEVs can be used in HVACR systems for other applications, such as evaporator pressure regulators (EPRs) and hot-gas bypass or defrost valves, **Figure 20-38**.

20.6.2 Pulse Width–Modulating (PWM) Solenoid EEVs

PWM solenoid EEVs are refrigerant metering devices that use a pulse width modulation signal to control the operation of a solenoid valve for variable refrigerant flow, **Figure 20-39**. In this type of valve, a control signal rapidly opens and closes a solenoid valve at different speeds in order to vary refrigerant flow.

Since most solenoid valves are designed to be either open or closed, they cannot maintain a valve

Copyright Goodheart-Willcox Co., Inc.

with permission from Carel Industries - all right reserved

Figure 20-38. EEVs are available in different styles and can be used in multiple applications in HVACR systems.

position located somewhere between open or closed. Other types of expansion valves, such as automatic expansion valves and thermostatic expansion valves, can hold their valves at any position for the purpose of varying refrigerant flow. A solenoid valve's inability to hold the valve at an intermediate position would normally exclude it from being used to modulate refrigerant flow. However, by using a modulating electronic signal to control whether the valve is open or closed for specific intervals within a given amount of time, PWM solenoid EEVs can be used to modulate refrigerant flow.

Invensys Climate Controls Americas

Figure 20-39. A PWM solenoid EEV may look like a regular solenoid valve. This underscores the importance of the controller and control signal in regulating a PWM solenoid EEV's operation.

The longer a PWM solenoid EEV holds its valve open during a given interval, the more refrigerant flows into the evaporator. The shorter the amount of time a PWM solenoid EEV holds its valve open during a given interval, the less refrigerant flows into the evaporator. In this way, a properly controlled solenoid valve can be used to vary refrigerant flow.

20.7 Float-Operated Refrigerant Controls

The metering devices discussed so far regulate flow of refrigerant into the evaporator based on temperature and pressure. Another class of metering devices regulates refrigerant flow based on the quantity of liquid refrigerant at different places in the system. This approach to refrigerant metering requires a liquid receiver, a tank built into the evaporator or condenser where liquid refrigerant accumulates, a float, a valve, and a linkage between the float and the valve.

There are two main types of float-operated metering devices. The first type controls the flow of liquid refrigerant into the evaporator. This type is called a

Copyright Goodheart-Willcox Co., Inc.

low-side float. The second type controls the flow of liquid refrigerant out of the liquid receiver on the high side of the system. This type is called a high-side float.

20.7.1 Low-Side Float (LSF)

A ***low-side float (LSF)*** is an efficient, yet simple, refrigerant control. Its job is to maintain a constant level of liquid refrigerant in the evaporator. It does this by adjusting flow through its valve based on the level of liquid refrigerant in the evaporator.

Systems that use this type of valve control are known as ***flooded systems***. The flooded evaporators used in low-side float systems are efficient heat transfer devices. This means that heat moves easily from the evaporator shell to the liquid refrigerant inside.

Operation

In this type of system, liquid refrigerant flows from the liquid receiver through the liquid line. Refrigerant flow is metered by a low-side float needle. The evaporator in this system consists of a finned tank. The tank contains a float and needle control. These maintain a constant level of liquid refrigerant under a low-side pressure. This refrigerant, since it is a liquid at low pressure, is at a low temperature. The cold liquid refrigerant will absorb considerable heat in both the On and the Off cycles, **Figure 20-40**.

Some of the refrigerant inside the evaporator tank vaporizes as warm air passes over the evaporator. The vaporized refrigerant moves through the suction line to the compressor. As this happens, the liquid level in the evaporator tank drops, and the float drops with it. As the float drops, the linkage between the float and the needle valve causes the needle valve to open further. This increases the flow of liquid refrigerant into the evaporator until the proper liquid level is reached. As the float rises with the liquid level, it closes the needle valve, slowing the flow of liquid refrigerant into the evaporator and maintaining the desired level. This operation continues until the preset pressure level is reached and the motor controller cuts power to the compressor motor.

The pressure on the low side in a flooded system such as this will vary with the temperature. The higher the temperature, the higher the low-side pressure. For this reason, such systems usually use low-side pressure to control the compressor motor. A spring-loaded pressure-sensitive switch is located on the suction line or on the evaporator. When the low-side pressure rises, the switch closes and activates the compressor motor. As the motor drives the compressor, the pressure and temperature in the evaporator are reduced. At a given pressure setting, the pressure switch opens and the compressor motor stops. When the pressure in the evaporator rises to a level corresponding to a preset refrigerant temperature, the cycle will repeat. The compressor motor will then start again.

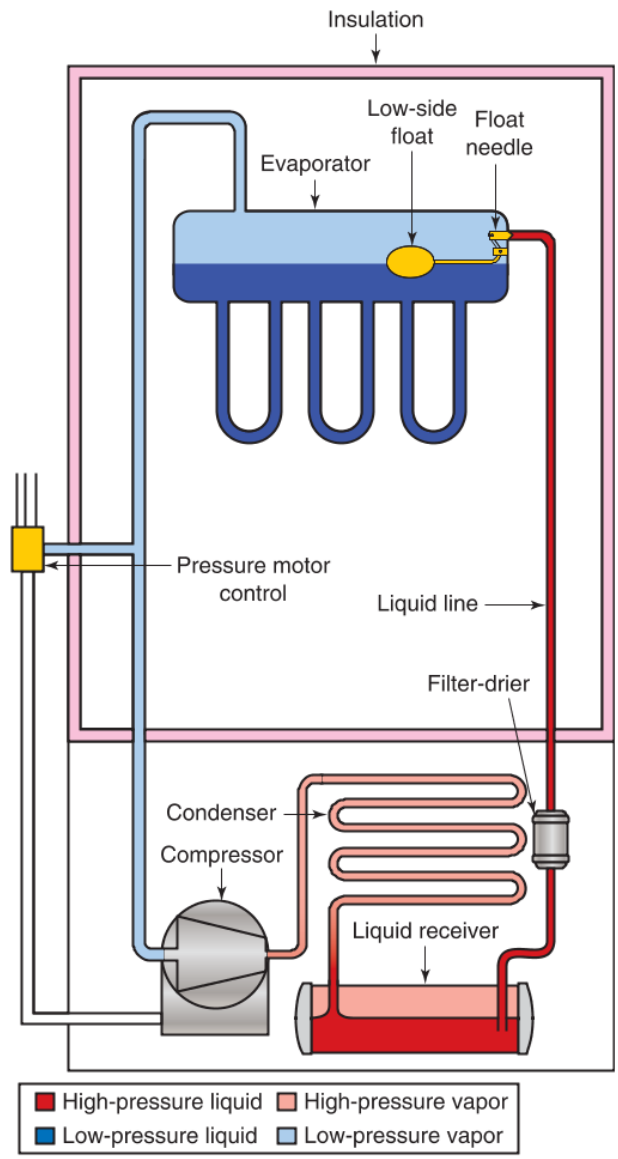

Goodheart-Willcox Publisher

Figure 20-40. A system that uses a low-side float refrigerant control. Note the motor controller mounted on the suction line is triggered by suction line pressure.

The cabinet temperature may be controlled by a temperature control switch. In such systems, the temperature-sensitive element is usually clamped to the fins on the evaporator. This type of system is useful when a constant temperature is desired. It is often used on drinking fountains and other systems that are required to maintain a constant temperature.

Copyright Goodheart-Willcox Co., Inc.

In systems with a low-side float-controlled metering device, the pressures do not balance during the Off cycle. Therefore, it is necessary to use a motor that will start under a load. Such a system also requires a rather large refrigerant charge. This is because there is liquid refrigerant in both the liquid receiver and in the evaporator.

All flooded systems are quite efficient. Cold liquid refrigerant wets the evaporator surfaces, providing excellent heat transfer. These systems are also easy to service. The float needle and seat must be kept in good condition to prevent excessive flooding of the low side.

Construction

Figure 20-41 is a cutaway illustration showing the exterior and the interior construction of a flooded evaporator equipped with a low-side float. Either a temperature-operated or pressure-operated motor control may be used. A low-side float system usually has a large receiver built into the evaporator for the liquid refrigerant. The receiver must be large enough to store all liquid refrigerant that is in the system.

The float itself may be a sealed ball, a sealed cylinder, or an open pan. It is connected by levers to a needle or ball valve. This valve closes when the liquid level reaches the correct height. The valve opens when some of the refrigerant evaporates and the liquid level drops.

In evaporators equipped with float-operated metering devices, the suction line extends into the float chamber. In a pan float design, the suction tube extends to the bottom of the pan. This ensures that oil collected in the pan is drawn into the suction line and recirculated, **Figure 20-42**.

Oil picked up by the vapor is normally returned through a small opening at a predetermined level in the suction return tubing. Since the diameter of the hole is small, if the unit is not level, the oil will not return to the compressor. When this occurs, the oil forms a layer on the surface of the liquid refrigerant. This condition is referred to as ***oil binding***. The layer of

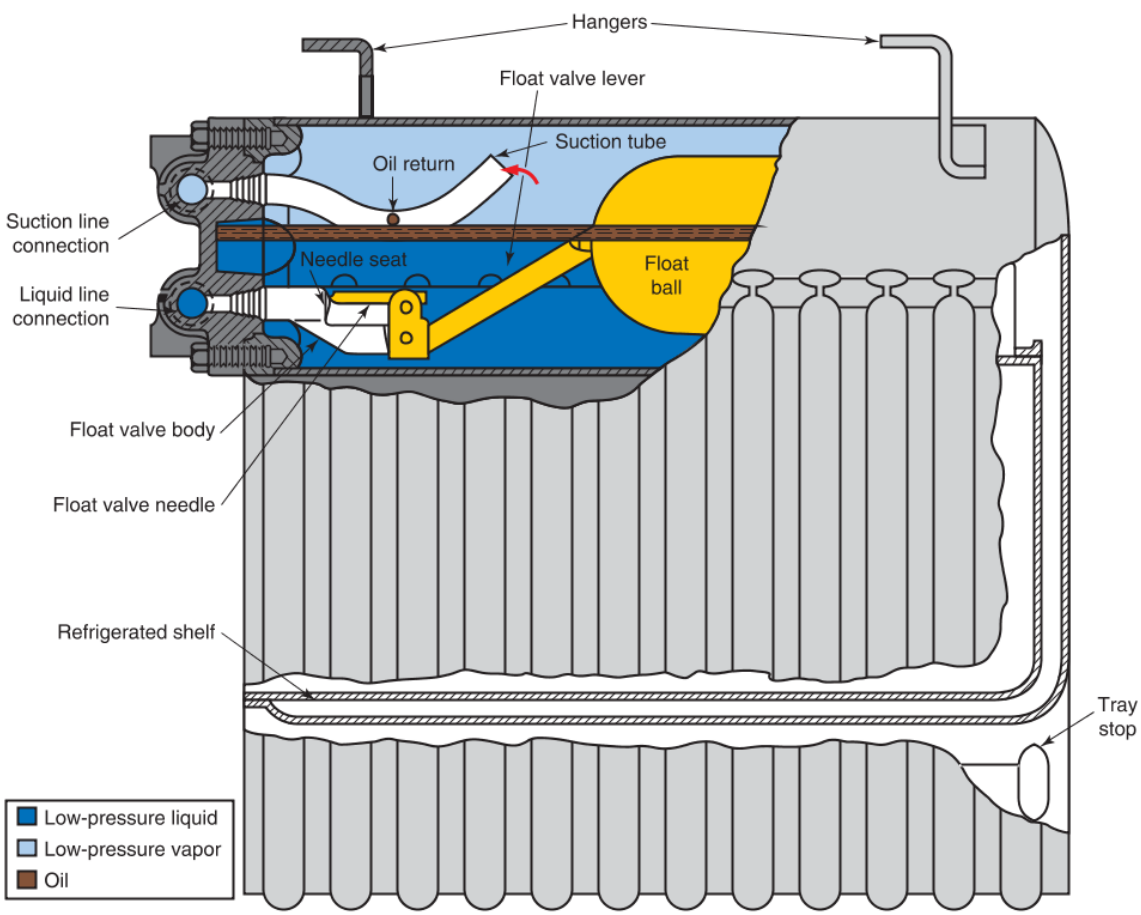

Goodheart-Willcox Publisher

Figure 20-41. A flooded evaporator equipped with a low-side float. Note the suction line and the liquid line connections. The float and needle mechanism maintain a constant level of liquid refrigerant in the evaporator.

Copyright Goodheart-Willcox Co., Inc.

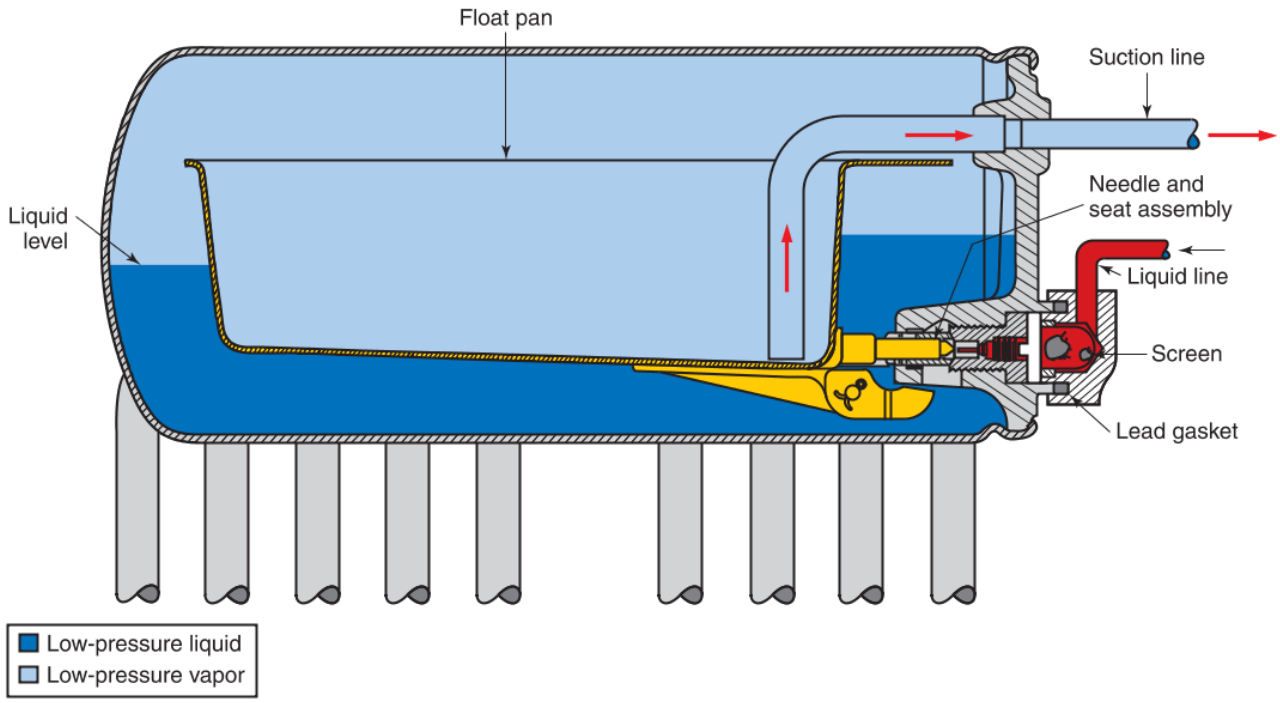

Goodheart-Willcox Publisher

Figure 20-42. A pan float is used in this low-side float valve assembly. The suction line dips to the bottom of the open float pan in order to remove oil that might otherwise accumulate in the pan.

oil prevents the refrigerant underneath from evaporating at a rapid rate or at the temperature corresponding to the pressure. Special provisions must be made to return any excess oil to the compressor. This is done by using an oil return wick or a small bypass at the liquid refrigerant surface.

Many large ammonia refrigeration systems and some water-cooling systems use a low-side float controlled metering device. A low-side float may be used in multiple evaporator systems.

20.7.2 High-Side Float (HSF)

A ***high-side float (HSF)*** is a float-type metering device that regulates refrigerant flow into the evaporator based on the volume of liquid refrigerant in the high-side receiver. A typical high-side float refrigerant control assembly consists of a chamber, a float, a valve, and a lever connecting the float and valve, **Figure 20-43**.

Floats are made of either copper or steel. In hermetic units, steel is usually used. Needles and seats are made of longwearing alloys, such as stainless steel or hard-surfaced alloys. A system equipped with a high-side float will not have a separate liquid receiver. The function of the liquid receiver is accomplished by the float chamber instead.

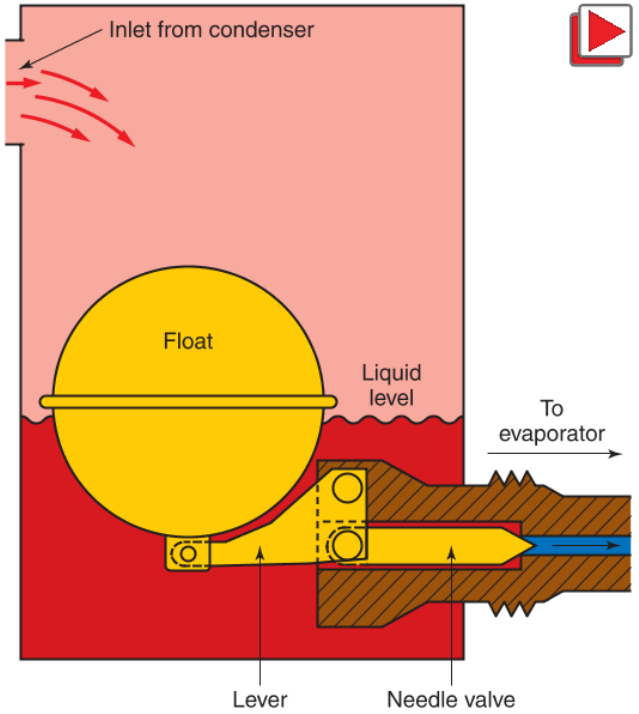

Goodheart-Willcox Publisher

Figure 20-43. A typical high-side float assembly. Liquid refrigerant flowing in from the condenser causes the float to rise, which opens a needle valve.

Copyright Goodheart-Willcox Co., Inc.

Like low-side floats, high-side floats are used in flooded systems. The evaporators in flooded systems have a reservoir that is always filled with liquid refrigerant.

Operation

Figure 20-44 is a drawing of a high-side float refrigerant control system. As the compressor runs, refrigerant from the condenser flows into the high-side float chamber. As the chamber fills, the float rises, opening a valve at the chamber's outlet. This allows more liquid refrigerant to flow through the control valve. When the liquid level inside the float chamber drops, the valve closes, slowing the flow of refrigerant. The amount of refrigerant allowed to pass through the float valve equals the amount of refrigerant vaporized in the evaporator.

A high-side float may be installed right next to the evaporator, so that refrigerant leaving the valve directly enters the evaporator, or it may be installed at some distance from the evaporator and connected to the evaporator through the liquid line. If the high-side float valve is installed away from the evaporator, as in **Figure 20-44**, the system must be designed so the refrigerant exiting the float valve is still under pressure. This prevents the refrigerant from vaporizing before it reaches the evaporator. That means an additional valve or other restriction must be installed between the liquid line and the evaporator to provide the required pressure drop. A capillary tube is frequently used in place of a standard liquid line. If a larger liquid line is used, it should have a weight valve at the evaporator inlet.

A ***weight valve*** is a simple valve consisting of a weighted needle, an adjustment spring, a valve seat, an

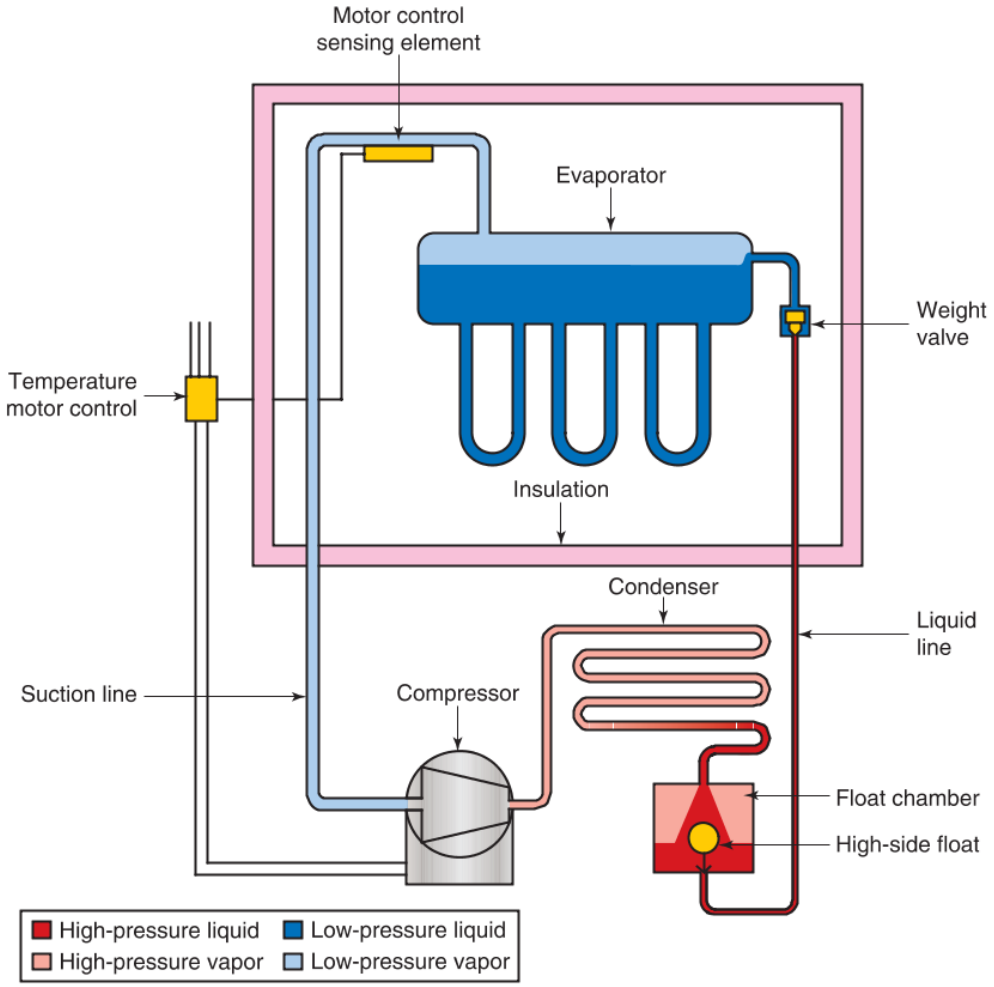

Goodheart-Willcox Publisher

Figure 20-44. A compression system equipped with a high-side float refrigerant control. Note that a weight valve is installed between the liquid line and the evaporator. This valve keeps the liquid line pressurized to prevent refrigerant from vaporizing ahead of the evaporator.

Copyright Goodheart-Willcox Co., Inc.

inlet port, and an outlet port. The refrigerant pressure in the liquid line must overcome the weight of the needle and spring pressure in order to pass into the evaporator. This further limits the flow of refrigerant and creates a pressure drop between the liquid line and evaporator. **Figure 20-44** shows a weight valve in the liquid line.

The evaporator is under low pressure. Therefore, the tubing connecting the high-side float and the evaporator should be insulated. Either a temperature or a pressure motor control can be used on this type of system. The motor control's sensing element will be located in the refrigerated space, as shown in **Figure 20-44**.

The high-side float system is popular in commercial applications where high operating efficiency is desired. It is frequently used in the flooded cooler of a centrifugal chiller. The equipment is easy to service. However, the amount of refrigerant charged into the system must be very accurately measured. The evaporator must receive the correct amount of refrigerant in order for the system to operate correctly. Extra refrigerant will overcharge the evaporator and cause frosting of the suction line.

High-side float systems do not have as much trouble with oil distribution as low-side float controls. At higher pressure, the oil dissolves and circulates more readily in the liquid refrigerant. However, the evaporator used with a high-side float control must be equipped with a special oil return, otherwise oil binding will still occur.

Copyright Goodheart-Willcox Co., Inc.

Summary

- Metering devices restrict refrigerant flow from the liquid line into the evaporator, thereby maintaining the proper pressure drop between the high side and low side of an HVACR system. Fixed metering devices provide a constant rate of refrigerant flow while the compressor is running. Modulating metering devices adjust their orifice size to compensate for heavy loads and other changes in the operating conditions of the system.
- Metering orifices and capillary tubes use their small openings to produce a pressure drop between high and low sides of a system. They both allow high-side and low-side pressures to equalize during the Off cycle.
- Thermostatic expansion valves (TXVs) adjust to changes in low-side pressure and evaporator temperature to maintain a predetermined superheat. A sensing bulb installed on the suction line provides pressure to the top of the valve's diaphragm, which controls the opening of the valve. Evaporator pressure and a superheat spring apply pressure to the bottom of the valve's diaphragm, which works to close the valve. Unless the TXV is equipped with a bleed valve or bleed ports, the high-side and low-side pressures will not equalize during the Off cycle.
- The type of refrigerant charge in a TXV's sensing bulb and the tension of the superheat spring affect the temperature and pressure conditions under which the valve opens and closes. The superheat spring tension must be properly adjusted to provide optimum evaporator efficiency and reduce valve hunting.
- The capacity of a thermostatic expansion valve is dependent on orifice size, the pressure difference between the low side and high side of the system, and the temperature and pressure of the refrigerant in the liquid line. An undersized TXV will starve the evaporator regardless of the superheat setting. An oversized TXV will cause excessive hunting and suction line frosting.
- A distributor splits the flow of refrigerant coming out of a metering device and supplies equal portions of the flow to separate, parallel circuits within the evaporator. This reduces pressure drop through the evaporator and allows more uniform cooling across the coil. A pressure-limiting expansion valve closes the TXV when suction pressure exceeds a preset limit to prevent overloading the compressor. Pressure limits can be achieved using a mechanical pressure-limiter or a gas-charged or gas cross-charged sensing bulb.
- Automatic expansion valves (AXVs) adjust refrigerant flow based solely on low-side pressure. By doing so, they maintain a constant pressure in the evaporator. Such systems are referred to as dry systems, because they do not allow liquid refrigerant to build up in the evaporator. AXVs can be operated by a diaphragm or bellows mechanism. During an AXV system's Off cycle, high-side and low-side pressures will not equalize unless the valve is equipped with a bleeder valve or bleeder ports.
- Electronic expansion valves (EEVs) are controlled by an electric operator. There are different types of electric operators in use, but the stepper motor operator is the most common in modern systems. A stepper motor is an electric motor capable of rotating in very small, precise increments. Because of the repeatable and precise rotation provided by a stepper motor, an EEV can maintain optimum flow under widely varying load conditions and be used in different applications in HVACR systems.
- Low-side floats are installed in an evaporator tank. This tank is always filled with liquid refrigerant, which is why these types of systems are referred to as flooded systems. As the liquid level in the evaporator tank decreases, the float lowers, opening the valve and allowing more liquid refrigerant into the evaporator. When the liquid level rises, the float rises with it, closing the valve.
- High-side float systems are installed in a chamber in the condenser or liquid line. As the liquid level in the chamber rises, the float also rises, opening the refrigerant control valve and allowing liquid refrigerant to pass into the evaporator or the liquid line. If the float is installed at a distance from the evaporator, an additional restriction, such as a capillary tube or weight valve, must be installed on the liquid line to prevent the refrigerant in the liquid line from vaporizing due to pressure drop.

Copyright Goodheart-Willcox Co., Inc.

Review Questions

Answer the following questions using the information in this chapter.

1. The simplest type of the following metering devices is the _____.
   A. thermostatic expansion valve
   B. automatic expansion valve
   C. low-side float
   D. capillary tube
2. _____ metering devices automatically change their orifice sizes to account for changes in load.
   A. Adsorption
   B. Equalizer
   C. Fixed
   D. Modulating
3. Which of the following statements regarding capillary tubes is *not* true?
   A. A capillary tube equalizes pressure between the high side and low side during the Off cycle.
   B. A capillary tube positioned so that a portion of it is in contact with the suction line functions as a heat exchanger for improved system efficiency.
   C. Having a proper refrigerant charge is less critical in a system with a capillary tube than it is in a system with a thermostatic expansion valve.
   D. The performance of a capillary tube is determined by its inside diameter, its length, and the number of turns.
4. The top of a thermostatic expansion valve's diaphragm is exposed to _____, which works to close the valve.
   A. atmospheric pressure
   B. high-side pressure
   C. low-side pressure
   D. sensing bulb pressure
5. The adjustor on a thermostatic expansion valve changes the _____.
   A. diameter of the valve's inlet passage
   B. diameter of the valve's outlet passage
   C. magnetic strength of the coil.
   D. tension on the superheat spring
6. The purpose of a bleed valve or bleed port in a thermostatic expansion valve is to _____.
   A. ensure that the underside of the diaphragm is exposed to the same pressure as the evaporator outlet
   B. equalize low-side and high-side pressure during the Off cycle
   C. reduce valve hunting during operation
   D. vent refrigerant to the atmosphere if high-side pressure becomes excessive
7. Which of the following types of sensing bulbs are charged with the same type of refrigerant used in the system?
   A. Gas-charged and adsorption gas cross-charged.
   B. Gas-charged and gas cross-charged.
   C. Liquid-charged and gas-charged.
   D. Liquid-charged and liquid cross-charged.
8. A mechanical pressure limiter or a _____ can be used to limit the maximum operating pressure (MOP) of a thermostatic expansion valve.
   A. liquid-charged sensing bulb
   B. liquid cross-charged sensing bulb
   C. gas-charged sensing bulb
   D. All of the above.
9. Which of the following statements regarding automatic expansion valves is *not* true?
   A. An AXV closes as evaporator pressure rises and opens as evaporator pressure drops.
   B. Automatic expansion valves must be adjusted for atmospheric pressure.
   C. The evaporator of a system equipped with a properly operating automatic expansion valve will not become entirely filled with liquid refrigerant.
   D. Sensing bulb pressure acts to close the valve and low-side pressure acts to open the valve.
10. Which of the following statements regarding stepper motor EEVs is *not* true?
   A. Its controller will occasionally fully close the valve by sending the stepper motor more step signals than it can use.
   B. A stepper motor can rotate in small, precise, and repeatable increments.
   C. A stepper motor EEV has a gear train and threaded piston that convert the motor's rotation into linear movement of the valve.
   D. A stepper motor regulates flow as it responds to a PWM signal by opening and closing rapidly.

Copyright Goodheart-Willcox Co., Inc.

11. A _____ varies refrigerant flow by varying the speeds at which a solenoid-operated valve opens and closes.
    A. dual-pressure EEV
    B. float-operated EEV
    C. pulse-width modulating EEV
    D. variable-frequency solenoid EEV
12. Which of the following statements regarding a low-side float system is *not* true?
    A. The evaporator has a large receiver that holds liquid refrigerant.
    B. The float can be a sealed ball or an open pan.
    C. The high-side and low-side pressures balance during the Off cycle.
    D. These systems are often referred to as flooded systems.
13. Which device is used to reduce pressure drop across a large evaporator?
    A. bleeder or bypass
    B. distributor
    C. heat exchanger
    D. pressure limiter
14. In heat pump systems, which metering device uses a movable piston that allows full flow in one direction and causes a pressure drop for flow in the other direction?
    A. automatic expansion valve
    B. capillary tube
    C. metering orifice
    D. thermostatic expansion valve
15. A high-side float is a float-type metering device that regulates refrigerant flow into the evaporator based on the _____ of liquid refrigerant in the high-side receiver.
    A. pressure
    B. subcooling
    C. temperature
    D. volume

Copyright Goodheart-Willcox Co., Inc.

CHAPTER 21 Heat Exchangers

Chapter Outline

21.1 Evaporators
- 21.1.1 Air-Cooling Evaporators
- 21.1.2 Liquid-Cooling Evaporators
- 21.1.3 Fin-and-Tube Evaporators
- 21.1.4 Plate Evaporators
- 21.1.5 Microchannel Evaporators
- 21.1.6 Domestic Refrigerator Evaporators
- 21.1.7 Air-Conditioning Evaporators
- 21.1.8 Commercial Refrigeration Evaporators
- 21.1.9 Evaporator Defrost Controls
- 21.1.10 Evaporator Defrosting Methods

21.2 Condensers
- 21.2.1 Air-Cooled Condensers
- 21.2.2 Water-Cooled Condensers
- 21.2.3 Evaporative Condensers
- 21.2.4 Residential Condensers
- 21.2.5 Commercial Condensers
- 21.2.6 Air-Cooled Condenser Construction

21.3 Head Pressure Control
- 21.3.1 Head Pressure Control—Condenser Air Louvers
- 21.3.2 Head Pressure Control—Fan Speed Control and Cycling
- 21.3.3 Head Pressure Control—Electric Heat

21.4 Other Heat Exchangers
- 21.4.1 Suction Line-Liquid Line Heat Exchangers
- 21.4.2 Commercial Refrigeration Liquid Line Subcoolers
- 21.4.3 Plate Heat Exchangers
- 21.4.4 Heat Recovery Systems

Learning Objectives

Information in this chapter will enable you to:

- Compare and contrast air-cooling and liquid-cooling evaporators.
- Explain the construction of fin-and-tube, plate, and microchannel evaporators.
- Compare and contrast domestic, air-conditioning, and commercial refrigeration evaporators.
- Summarize the operation of evaporator defrost controls and defrosting methods.
- Describe the different types of water-cooled condensers.
- Explain the modes of operation of evaporative condensers.
- Compare and contrast domestic, air-conditioning, and commercial refrigeration condensers.
- Describe the construction of the different types of air-cooled condensers.
- Explain the methods of head pressure control that use condenser air louvers, fan speed and cycling, and electric heat.
- Summarize the operation and purposes of suction line-liquid line heat exchangers and commercial liquid line subcoolers.
- Explain the construction and operation of plate heat exchangers and heat recovery systems.

Technical Terms

air defrosting
air-cooled condenser
air-cooling evaporator
baffles
brine solution
combined-flow
condensate pump
counterflow
defrost timer
eddy currents
electric heat defrost
evaporative condenser
fin-and-tube evaporator
gravitational circulation
head pressure control
heat recovery system
hot-gas defrost
hot water reclaim tank
immersed evaporator
liquid-cooling evaporator
microchannel
nonfreezing solution defrost
off-cycle defrost
overdefrosting
plate evaporator
plate heat exchanger
pump-down defrost
pump-down solenoid
reverse cycle hot-gas defrost
shell-and-coil condenser
shell-and-tube condenser
subcooler
suction line-liquid line heat exchanger
sweet water
sweet water bath
time-initiated, pressure-terminated defrost timer
time-initiated, temperature-terminated defrost timer
time-initiated, time-terminated defrost timer
tube-within-a-tube condenser
water defrost
water-cooled condenser

Review of Key Concepts

Reviewing these concepts from earlier chapters will help you understand new concepts presented in this chapter:

- Matter exists in three states: solid, liquid, and gas. Energy is the ability to perform work or the ability to cause a change in matter. There are three methods of heat transfer: radiation, conduction, and convection. (Chapter 4)
- Latent heat is heat absorbed or released as a substance changes state. Latent heat has no effect on the temperature of a substance. Sensible heat is the heat energy absorbed or released to change the temperature of a substance. (Chapter 4)
- The volume of a gas is directly related to the temperature of the gas and inversely related to the pressure acting on the gas. (Chapter 5)
- Pascal's law states that pressure applied upon a confined fluid is transmitted equally and undiminished in all directions. This law applies to both liquids and gases. (Chapter 5)
- The higher the pressure is on a substance, the higher the temperature needed to bring about a change of physical state. The reverse is also true. The lower the pressure applied to a substance, the lower the temperature needed to bring about a change of physical state. (Chapter 5)
- Gay-Lussac's law states that if volume is held constant, the temperature of a gas varies directly with its pressure. As one variable rises, the other variable rises. As one drops, the other drops. (Chapter 5)
- A saturated vapor describes an enclosed quantity of a vaporized fluid that could condense if heat were removed or pressure increased. Saturated vapor often exists alongside a liquid form of the same substance. This is common in evaporators and condensers during refrigeration system operation. (Chapter 5)

Introduction

A heat exchanger is any device that transfers heat from one medium to another. In a refrigeration system, low-pressure refrigerant flows through an evaporator and absorbs heat from indoor air. This heat is later released from the now high-pressure refrigerant in a condenser to outside air. Both evaporator and condenser are examples of heat exchangers. A heat exchanger uses two separate mediums. One medium is releasing heat, and the other is absorbing heat. In many cases, these two mediums are refrigerant and air. However, different types of systems, such as chillers and hydronic systems, use water as a medium. Heat exchangers in forced-air heating systems are dependent on the method of heat production. Those will be covered in the heating chapters.

21.1 Evaporators

Evaporators and condensers are the most commonly recognized heat exchangers in HVACR systems. They can be categorized multiple ways and applied to systems to meet specific purposes. Many are built similarly (fins and tubes) and with the same types of materials (copper and aluminum) and even look similar to each other, **Figure 21-1**.

There are two basic types of evaporators, as categorized by the medium they are designed to cool:

- Air-cooling evaporators are used to directly cool the air within a cabinet or other conditioned space.
- Liquid-cooling evaporators are used to cool a body of liquid that is then used to cool other substances.

21.1.1 Air-Cooling Evaporators

Air-cooling evaporators are evaporators that are designed to directly cool the air in a conditioned space. In a system with an air-cooling evaporator, air is the primary medium for cooling the conditioned space and its contents.

An air-cooling evaporator transfers heat from the air circulating over it to the refrigerant inside its tubing. As the warmer air comes in contact with the evaporator, the air molecules transfer some of their heat to the fins on the evaporator. This heat, in turn, is conducted through the fins to the tubing. The heat then passes to the liquid refrigerant inside the tubing, vaporizing and superheating it, **Figure 21-2**.

Because the density of air is relatively low, heat transfers through it slowly. After heat has been absorbed into the metal, it travels efficiently and quickly. Upon reaching the interior surface of the tubing, heat can again have difficulty in reaching the liquid refrigerant in the system. Gas bubbles clinging to the internal surface of the tubing, along with an oil film, reduce the heat flow.

Evaporators can be further categorized into three groups, based on their use and case temperatures maintained:

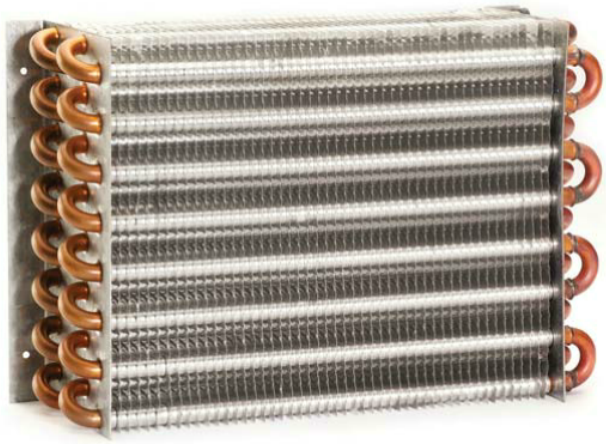

Blissfield Manufacturing

Figure 21-2. A fin-and-tube style air-cooling evaporator made of copper and aluminum.

Lordan A.C.S. Ltd

Figure 21-1. A variety of evaporators and condensers for different applications.

Copyright Goodheart-Willcox Co., Inc.

- Low-temperature (–10°F to 28°F)—frozen foods, such as ice cream, frozen dinners, and frozen vegetables.
- Medium-temperature (28°F to 40°F)—fresh foods, such as eggs, vegetables, and lunch meat.
- High-temperature (40°F to 60°F)—perishables, such as flowers, candy, and cakes.

The conditions under which an evaporator must work determine what class of evaporator is chosen. These conditions include the desired cabinet temperature range and the temperature difference between the evaporator and the cabinet.

Low-Temperature Applications

Evaporators used in low-temperature applications, such as commercial freezers, continuously build up frost when the compressor is operating. As the frost grows thicker on an evaporator coil, it reduces the heat transfer between the refrigerant in the evaporator and the ambient air. Frost acts as a thermal insulator, reducing cooling capacity. Since the system has a cut-in temperature below freezing, the frost that builds up on the evaporator will not melt during the Off cycle.

Heat must be applied to low-temperature evaporators for defrosting. Otherwise, the refrigeration system would need to be left off until the temperature of the air in the conditioned space could rise above freezing and melt the frost. In most low-temperature applications, leaving the refrigeration system off and allowing the temperature in the conditioned space to rise above freezing would be unacceptable, as it could spoil or ruin the products being refrigerated. Therefore, evaporators used in low-temperature applications must be equipped with some form of defrost system.

Pro Tip

Frost and Humidity

Frost that forms on the evaporator comes from moisture in the air. As moisture forms into frost, the cabinet air becomes drier. Dry air rapidly dries out food that is not sealed. A larger temperature difference between the evaporator and air will increase frost buildup and decrease humidity in the space. A lower temperature difference between the evaporator and air will slow frost buildup and not reduce humidity in the space as much.

Medium-Temperature Applications

In a medium-temperature application, the evaporator operates at temperatures below 32°F (0°C). This causes frost to accumulate on the evaporator. However, after the compressor shuts off, the evaporator coil may warm up above 32°F (0°C). The frost then melts, even without the aid of a defrost system.

The process of allowing the heat from the air in the conditioned space to melt the frost from the evaporator coils is called ***air defrosting***. It clears the evaporator surfaces of frost, restoring efficient heat transfer. It also keeps a high relative humidity (about 90% to 95%) in the conditioned space. However, this approach requires a relatively small temperature difference between the evaporator and the air in the cabinet. Since the temperature difference between the evaporator and the conditioned air is lower, the evaporator must be larger in order to produce the same amount of cooling.

Evaporators in medium-temperature applications may occasionally have trouble getting rid of moisture. After frost near the top of the evaporator melts, it flows downward over the rest of the evaporator surface. Sometimes, before this moisture can drain away, it freezes around the lower part of the evaporator. This ice accumulation on the evaporator fins may eventually block air circulation around the evaporator. Such blockage interferes with proper refrigeration.

High-Temperature Applications

Evaporators in high-temperature applications operate at temperatures above 32°F (0°C). Frost, therefore, does not normally form on the evaporator. Occasionally, the evaporator may frost up slightly just before the compressor shuts off. However, this frost quickly melts during the Off cycle. Since the evaporators do not frost over, they remove little moisture from inside the cabinet. Therefore, a relative humidity of 75% to 85% is maintained in these cabinets. This helps to keep produce fresh and stops shrinkage weight loss.

Natural-Draft and Forced-Draft Evaporators

In addition to their operating temperatures, air-cooling evaporators can be further categorized based on their means of circulating conditioned air. There are two main subclasses of air-cooling evaporators:

- Natural draft.
- Forced draft.

A *natural-draft evaporator* is an evaporator that depends on gravity for air circulation. ***Gravitational circulation*** occurs because cold air is denser than warm air and sinks below the warmer, less dense air. Hot air rises as cold air falls.

A *forced-draft evaporator* is an evaporator unit equipped with a fan. The fan blows air over the evaporator coil's compact arrangement of refrigerant-cooled tubes and fins. The evaporator coil and fan are usually enclosed in a metal housing.

Copyright Goodheart-Willcox Co., Inc.

21.1.2 Liquid-Cooling Evaporators

Liquid-cooling evaporators are evaporators that are designed to cool a liquid rather than air. The cooled liquid then acts as the primary medium for cooling the conditioned space and its contents. Liquid-cooling evaporators can be either *immersed* or *tube-within-a-tube*.

An ***immersed evaporator*** is a plain coil that is submerged and mounted inside a container filled with a liquid that provides good heat transfer. The cooled liquid is circulated and can be used for various purposes. This liquid may be water or a brine. Immersion evaporators are more efficient than air-cooling evaporators because liquids transfer heat faster than air.

Multiple evaporator systems use either a low-side float in a flooded evaporator or a thermostatic expansion valve metering device. Smaller, self-contained installations may use a capillary tube metering device.

Immersed Evaporator (Brine)

Some refrigeration and air conditioning applications require that water be kept from freezing at temperatures considerably below the normal freezing temperature of 32°F (0°C). Other applications require that water at atmospheric pressure be kept from boiling at temperatures above 212°F (100°C).

Adding certain substances to water creates a ***brine solution*** and changes at least two important characteristics of the water. Firstly, it raises the temperature at which the water will boil. Secondly, it lowers the temperature at which the water will freeze. See the *Appendix* for tables of brine solutions with a freezing point and specific gravity for each.

Immersed Evaporator (Sweet Water)

Some refrigeration and air conditioning installations immerse the evaporator in tap water, adding no salt or other substance. Tap water used in this manner is referred to as ***sweet water***. A setup with an evaporator immersed in sweet water is called a ***sweet water bath***.

Sweet water baths are often used in soda fountains. A coil of tubing containing the liquid to be cooled and consumed by the customer is submerged in the same water as the evaporator coil. This design allows the sweet water to freeze around the evaporator during the On cycle. The light ice accumulation acts as a reserve of refrigeration, **Figure 21-3**.

The evaporator should reach to the bottom of the bath if the bath temperature is to be less than 39.1°F (4°C). As water cools from 39.1°F (4°C) to 32°F (0°C), it expands and rises. Therefore, the coldest water will be at the top. This is why an evaporator coil must be located at the bottom of a sweet water bath in order to cool the water and beverage properly and evenly.

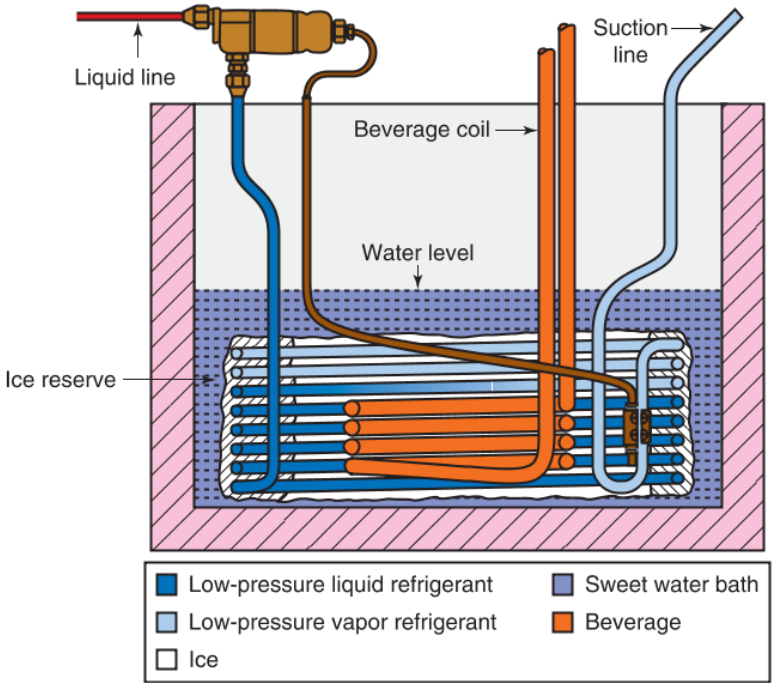

Goodheart-Willcox Publisher

Figure 21-3. Sweet water (tap water) baths are often used for soda fountains.

Copyright Goodheart-Willcox Co., Inc.

21.1.3 Fin-and-Tube Evaporators

The major types of air-cooling evaporator construction are fin-and-tube, plate, and microchannel. The most widely used and recognized is the fin-and-tube style of evaporator. ***Fin-and-tube evaporators*** have metal fins of various styles and types connected to the evaporator tubing. These evaporators are available in different arrangements. The parts most commonly varied are the fins, fittings, and tubing. Materials vary as well, for different applications. Some common combinations of materials used include copper tubing with aluminum fins, copper tubing with copper fins, and steel tubing with aluminum fins (for ammonia R-717), **Figure 21-4**.

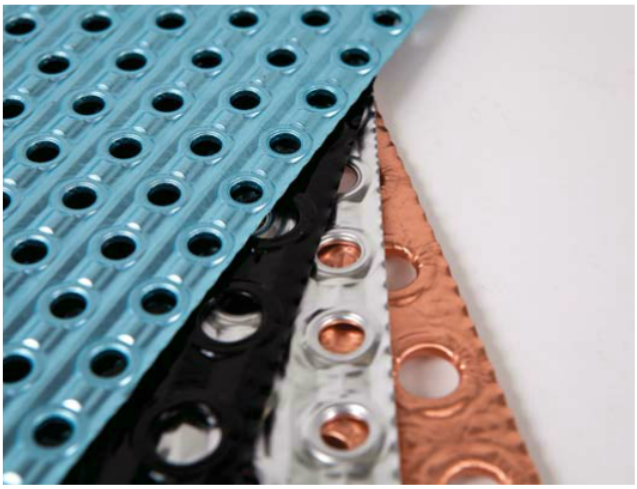

Lordan A.C.S. Ltd

Figure 21-4. Evaporator fins can be made of different material based on the needs of a given application.

Fin Arrangements

Various methods are used to bond evaporator fins to the evaporator tubing. Some manufacturers attach the fin to the tubing with a press fit, **Figure 21-5**. Another method of bonding tubing to off-center fins is shown in **Figure 21-6**. Flanging can be used to automatically space fins, as shown in **Figure 21-7**.

Fin spacing varies between 1/2″ and 1 1/2″ (1 cm and 4 cm) for natural-draft evaporators and 1/16″ to 1/4″ (2 mm to 6 mm) for forced-draft evaporators. This spacing impacts the number of fins that can be used and the amount of surface area exposed to the air that

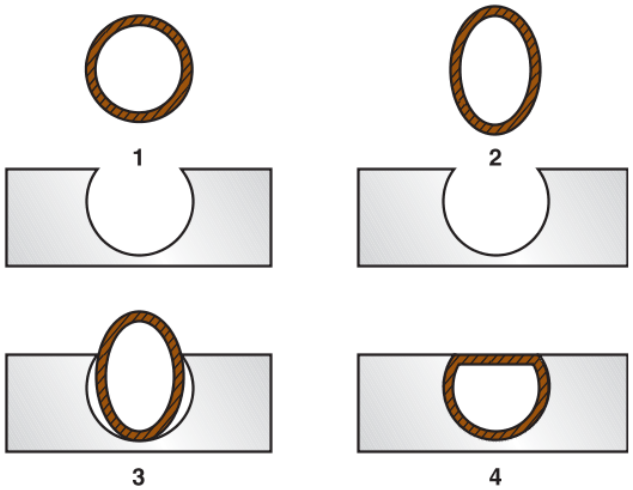

Peerless of America, Inc.

Figure 21-6. Mechanically bonding tubing to off-center fins. 1—Original tubing and fin. 2—Tubing is formed into an elliptical shape. 3—Tubing is inserted into the fin opening. 4—A fixture holds the fins while the tube is pressed into the same shape as the fin openings.

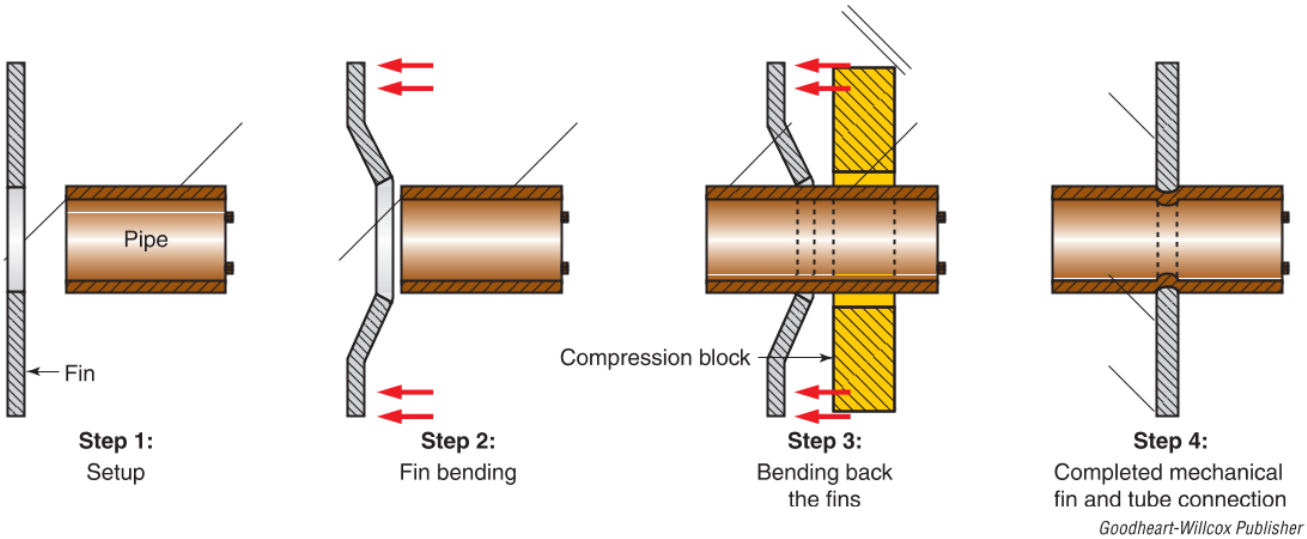

Goodheart-Willcox Publisher

Figure 21-5. One method of mechanically bonding evaporator fins to tubing involves dishing the fins to expand the fin hole for the tubing. After the tube is inserted, a mandrel is used to flatten the fin so it firmly pinches the tubing.

Copyright Goodheart-Willcox Co., Inc.

is being cooled. A manufacturer can adjust the cooling ability of an evaporator by changing the spacing and number of fins in the design. Adding more fins increases the exposed surface area and results in greater cooling ability, **Figure 21-8**.

Fin spacing is also adjusted to compensate for the depth of the evaporator. The deeper the evaporator, the greater the fin spacing (to minimize air restriction). Evaporators that have 6″ to 8″ (15 cm to 20 cm) depth usually have 1″ (2.5 cm) spacing. Those with 18″ to 20″ (38 cm to 51 cm) depth often have 1 1/2″ (4 cm) spacing. Fin spacing of 1″ or less decreases air turbulence. The tubing used usually is 5/8″ (16 mm) OD. However, 3/4″ (19 mm) OD tubing is used in large evaporators, **Figure 21-9**.

Tubing Arrangements

Some companies use one continuous piece of tubing for the complete evaporator. Others make the bends separately and then braze straight lengths of tubing to them. Many evaporators are composed of individual refrigerant circuits that run in parallel with each other. Each refrigerant circuit is fed from a distributor attached to the outlet of the metering device, and each circuit feeds into a suction line header. This design evenly distributes heat absorption throughout the evaporator and reduces pressure drop across the evaporator, **Figure 21-10**.

Some evaporator manufacturers use special designs inside the tubing. These inner designs may be incorporated to increase the surface area contact between the tubing and the refrigerant. Other designs are intended to swirl the refrigerant. This improves heat transfer from the circulating air to the boiling refrigerant and helps the refrigerant carry oil.

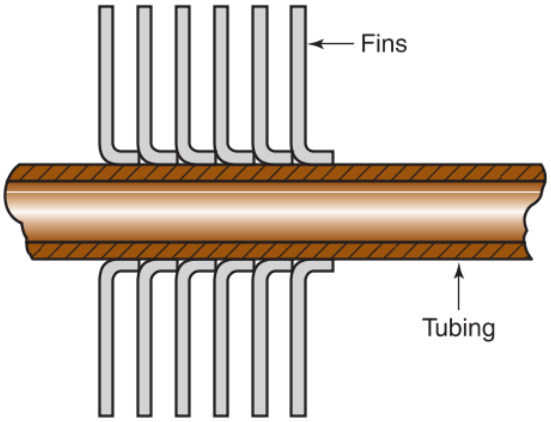

Goodheart-Willcox Publisher

Figure 21-7. Flanged fins mounted on a section of tubing. The flanges determine the fin spacing.

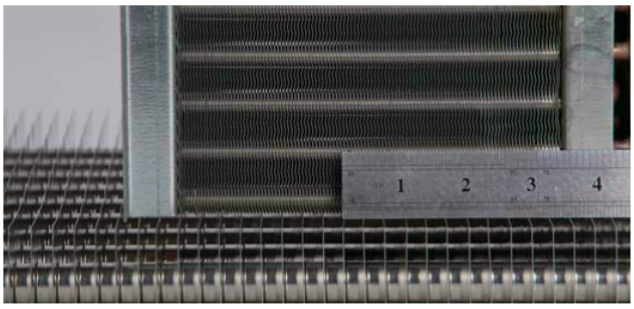

Lordan A.C.S. Ltd

Figure 21-8. Fin space differs for heat exchangers based on its application. Since evaporators run the risk of becoming blocked with frost or ice buildup, they cannot always have fins as close together as condensers, which have no risk of frosting.

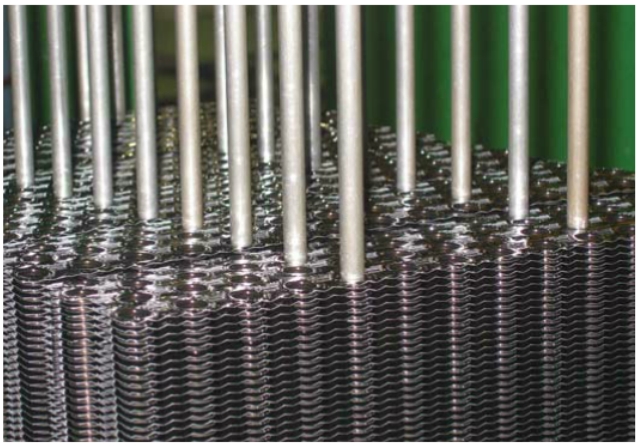

Lordan A.C.S. Ltd

Figure 21-9. Layers of fins being assembled on the tubing of a large heat exchanger.

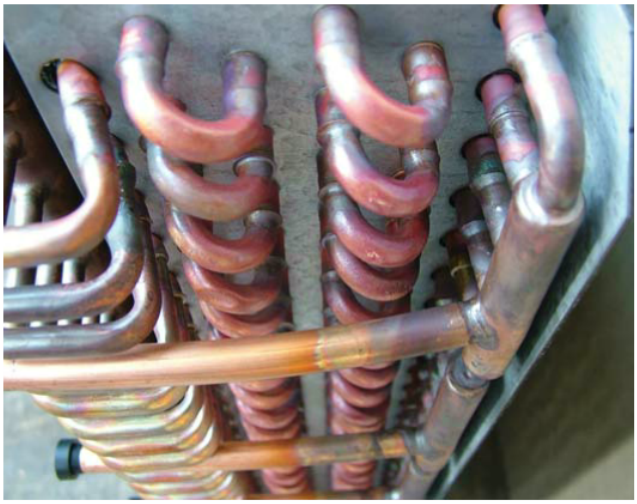

Lordan A.C.S. Ltd

Figure 21-10. By connecting headers and return bend connectors in different ways, the refrigerant circuit can be shorter, longer, or designed for specific applications.

Copyright Goodheart-Willcox Co., Inc.

Baffles

Baffles are surfaces in and along air ducts that direct airflow through the evaporator and throughout the cabinet. They are designed to guide forced air all around the interior of the conditioned area. This eliminates dead air spots or areas where warm air can collect.

Any horizontal baffle or drain pan should be insulated. The top surface may be in contact with cold air. The under part of the baffle may be in contact with relatively warm air. If the baffle were not insulated, this temperature difference could cause condensation. ***Eddy currents*** (small circular flows of air) would also disturb airflow in the cabinet.

Multiple-baffled evaporators often circulate air using natural drafts. The air flows around the cabinet because of the weight differences of the cold air and the warm air. Warm air is lighter and, therefore, rises in the box. This natural circulation must not be blocked or the cabinet temperature will not be constant. Baffling the evaporators promotes and accelerates this natural circulation of the air. Baffles may also serve as drain pans.

Fitting Arrangements

Many evaporators are equipped with fittings that are used to connect tubing to the evaporator. In some cases an external female nut is placed on the tubing before it is flared. Some manufacturers use a male flare fitting brazed to the end fin. **Figure 21-11** shows the two types of evaporator fittings.

21.1.4 Plate Evaporators

Plate evaporators are heat exchangers fabricated from two metal sheets, welded together, that form a series of passages through which refrigerant flows. Plate evaporators can be designed for use as forced-draft evaporators or can be used as natural-draft evaporators, as seen in some domestic refrigerators and freezers. A serpentine flow configuration provides high internal flow velocities and high heat transfer rates, **Figure 21-12**.

21.1.5 Microchannel Evaporators

Microchannel evaporators are more compact and efficient than fin-and-tube evaporators. ***Microchannel*** describes a construction in which fluid passages are less than 1 mm in diameter. These small refrigerant passages are surrounded by tightly packed fins that further increase surface area for efficient heat transfer.

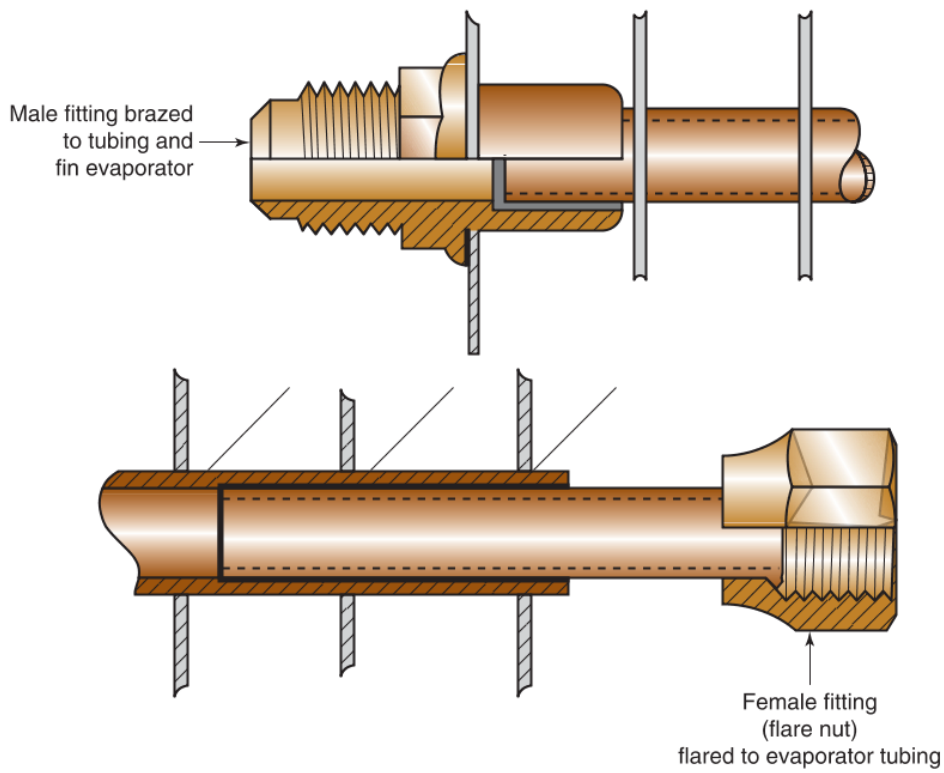

Goodheart-Willcox Publisher

Figure 21-11. Fittings used to attach refrigeration lines to an evaporator.

Copyright Goodheart-Willcox Co., Inc.

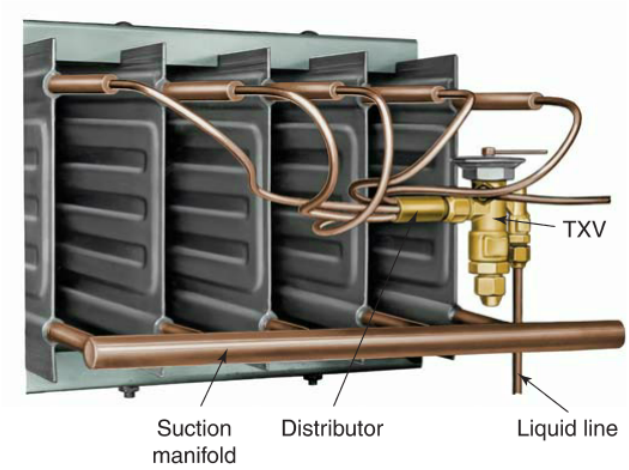

Courtesy of Sporlan Division - Parker Hannifin Corporation

Figure 21-12. A serpentine coil plate evaporator.

Danfoss

Figure 21-14. Cutaway of microchannel evaporator tubes and fins. Tightly packed fins provided increased convection.

Microchannel evaporators are made of extruded aluminum to create small passages through a flat tube as shown in **Figure 21-13**. Refrigerant flows through the header and into the small holes in the tubes. By using flat tubes, the microchannel evaporator has more tube surface contacting the fins. This improves conduction. There is also a greater number of fins per square inch, which improves convection, **Figure 21-14**.

Microchannel evaporators are up to 30% more efficient that the traditional copper fin-and-tube evaporators, so their size can be relatively small for the same cooling capacity as fin-and-tube. The use of lightweight aluminum is also a benefit of this design, **Figure 21-15**.

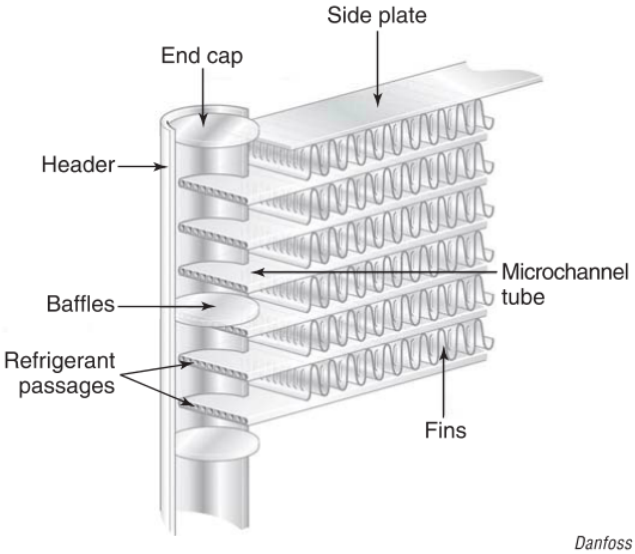

Danfoss

Figure 21-13. Note the small refrigerant passages in this microchannel evaporator.

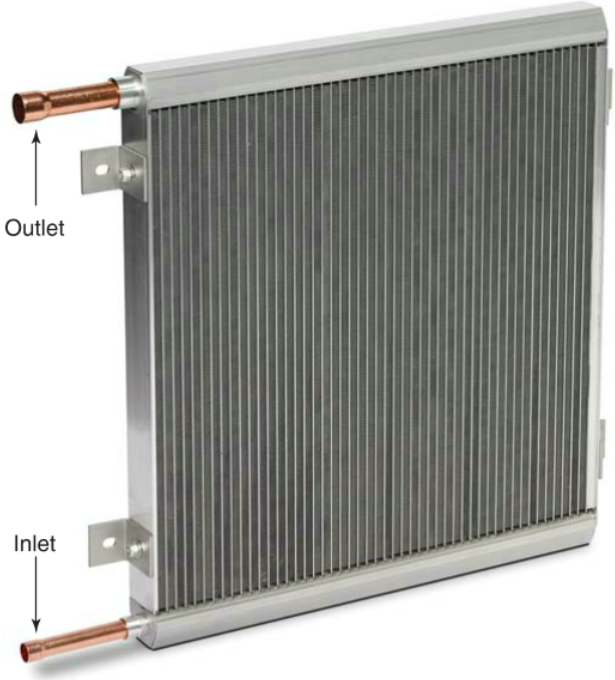

Alcoil

Figure 21-15. A flat panel microchannel evaporator.

21.1.6 Domestic Refrigerator Evaporators

Domestic refrigerator and freezer evaporators are usually of two designs: natural-draft and forced-draft. Natural-draft evaporators are also known as *plate evaporators*. They transfer heat by conduction of the warm cabinet air to the cooler evaporator plate and the refrigerant path formed between the two plates. A plate evaporator consists of an upper plate, a refrigerant path, and a bottom plate. This "sandwich" allows efficient heat transfer from the surface of the plates to the refrigerant path within the plates, **Figure 21-16**.

Copyright Goodheart-Willcox Co., Inc.

Plate evaporators can be designed to surround the walls of a freezer section.

Natural-draft evaporators have the advantage of not requiring an evaporator fan. Conduction is used to transfer heat from the cabinet to the evaporator. The disadvantage of a plate evaporator is that the refrigerant tubing is exposed in the case. Care needs to be taken not to puncture the evaporator when cleaning or working on the unit.

Pro Tip

Plate Evaporator Care

Some plate evaporators require manual defrosting. As ice forms around the evaporator, the ability to transfer heat from the cabinet is reduced. Poor cooling performance is often a result of "ice block" formation. The unit must be shut down and defrosted. To do this safely, place a pan of hot water in the case and close the door for a period of time. Use a sponge and rags to wipe up all melted water. Never use a sharp metal object to "chip" at the ice. This may result in puncturing the evaporator.

Forced-draft evaporators require airflow to be moved around the cabinet to transfer heat to the coil. Forced-draft evaporators are commonly designed with fins mounted on their tubing. The purpose of the fins is to expose a greater surface area to the cabinet air. The warm air from the cabinet transfers heat to the fins, which then transfer this heat to the refrigerant in the tube. Conduction is the method of heat transfer from the fin to the tube.

Forced-draft evaporators include an evaporator fan to circulate the cabinet air across the evaporator. This increase in airflow across the evaporator speeds up the heat transfer process through the use of convection. By using an evaporator fan, the evaporator coil can be placed behind the refrigerated cabinet in a protected area that is not exposed as a plate evaporator is. **Figure 21-17** shows a typical forced-draft evaporator in a domestic appliance.

Most forced-draft evaporators use automatic defrosting to remove ice buildup. The defrost cycle is usually timed to occur at regular intervals to ensure that adequate airflow is allowed to pass over the evaporator coils. For more information on evaporators and defrosting in domestic refrigerators and freezers, see Chapter 23, *Overview of Domestic Refrigerators and Freezers* and Chapter 24, *Systems and Components of Domestic Refrigerators and Freezers*.

21.1.7 Air-Conditioning Evaporators

Most residential air-conditioning evaporators are direct expansion and forced-draft type. Construction is generally fin-and-tube. A blower fan circulates air through the fins where heat is absorbed from the air into the refrigerant within the tubing. Many evaporators for air conditioning applications are A-coil evaporators, **Figure 21-18**.

Maytag

Figure 21-16. Typical plate evaporator in a domestic refrigerator-freezer.

Maytag

Figure 21-17. Forced-draft evaporators may be located behind a panel in the cabinet area of domestic appliances.

Copyright Goodheart-Willcox Co., Inc.

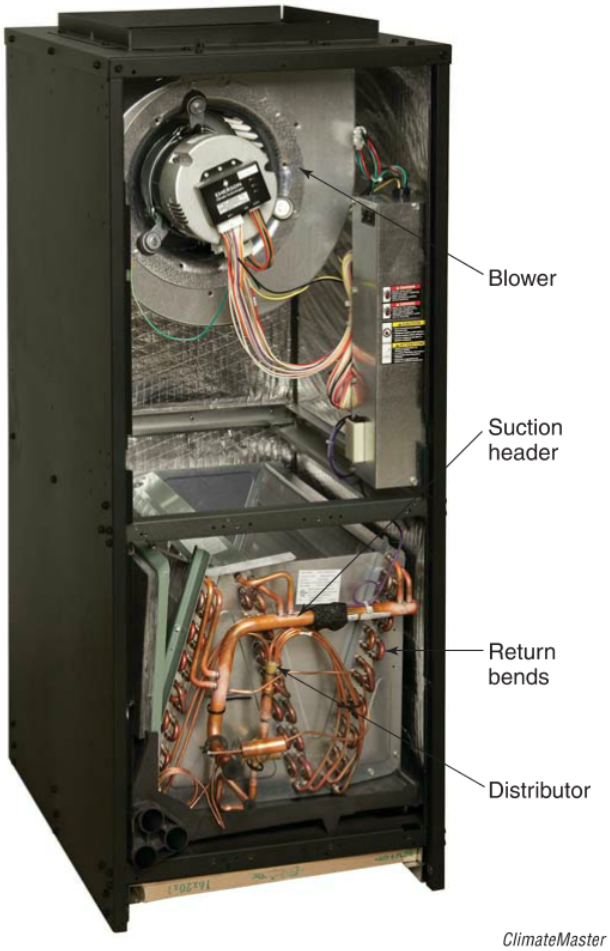

ClimateMaster

Figure 21-18. The evaporator in this upflow residential air handler is a modified A-coil. The lengths of return bends along the side indicate the location angles of the refrigerant coils.

A distributor is often used to divide the incoming liquid refrigerant into separate parallel circuits throughout the evaporator. This helps to provide a more uniform temperature throughout the coil. Superheated vapor gathers in a suction header that passes the refrigerant along to the suction line.

21.1.8 Commercial Refrigeration Evaporators

Many types of evaporators are used in commercial mechanical refrigeration. Customers demand great variety in commercial refrigeration. Therefore, special evaporator designs are required for many installations. Evaporator coils are generally designed to take up little space, **Figure 21-19**.

Forced-draft evaporators have a tendency to cause rapid dehydration (drying) of foods. Special care must be taken to avoid this. Drying will be minimized if the evaporator is large. A large evaporator operates with a small difference (10°F to 12°F) between the air and refrigerant temperatures. It should also circulate air slowly.

In some cases, drying is not harmful and air can be allowed to flow through the evaporator rapidly. In such installations, small evaporators are practical. They are operated at a greater temperature difference, such as 20°F to 30°F (11°C to 17°C). Thermostatic expansion valve metering devices are usually used with forced-draft evaporators.

An evaporator's fan motor may be any size and, in coolers, may run continuously. The fan motor could also be controlled by either the evaporator temperature or fixture temperature. Refrigerant temperature is usually kept quite low. Rapid air circulation keeps the evaporator from frosting up. However, considerable condensation does occur, so drainage tubing should be connected to these evaporators, **Figure 21-20**.

Tecumseh Products Company

Figure 21-19. A typical commercial refrigeration forced-draft evaporator designed for ceiling mounting. Air enters at the back and exits at the fans.

Bally Refrigerated Boxes, Inc.

Figure 21-20. Note the evaporator drain tube connection for removal of condensation and defrost water on this forced-air, multi-fan evaporator unit.

Copyright Goodheart-Willcox Co., Inc.

Forced-draft evaporators operated at low refrigerant temperatures should have some form of defrosting control. Frost or ice buildup can drastically interfere with heat transfer. Evaporators that are designed for low-temperature applications have cooling fins that are spaced further apart than the cooling fins on evaporators for medium- and high-temperature applications. The additional space between the fins allows air to flow around the fins even when there is some frost buildup.

Forced-draft evaporators are used in medium- and low-temperature walk-in coolers. They are built in a variety of capacities, depending on the evaporator load required. Large evaporators may contain up to six evaporator fans. If used, a microprocessor can control the operation of the expansion valve, the defrost system, and the fan.

Conditioned space cabinets may have limited room. A few common mounting locations for forced-draft evaporators in walk-in coolers include the upper corners of the cabinet, the wall opposite the windows or the reach-in doors, and along the ceiling, **Figure 21-21**.

Display cases are narrow and there is little room for the evaporator. Many of the cases are open. **Figure 21-22** shows a single evaporator installation for a double-duty case with sections for display and storage. A display case using a forced-draft evaporator is shown in **Figure 21-23**.

21.1.9 Evaporator Defrost Controls

Many evaporators operate at temperatures below freezing. The demand for open display cases for frozen food requires these low-temperature systems. The evaporators operate at refrigerant temperatures of 0°F (–18°C), –10°F (–23°C), and even –20°F (–29°C) and use a forced-draft circulation.

Operation of evaporators in low temperatures causes frost buildup between the evaporator fins. Although the fins of evaporators used in low- temperature applications are spaced wider than those used in medium- or high-temperature applications, frost still builds up in the space between the fins. Frequent defrosting is needed to prevent the air passages between the fins from becoming clogged with frost. A defrosting system must be able to remove frost buildup from the evaporator without causing an unacceptable rise in cabinet temperature.

Automatic defrost systems need a control to start the defrost cycle. HVACR systems often use defrost timers to fulfill this role. A ***defrost timer*** is a control device that starts and stops a system's defrost cycle, **Figure 21-24**.

The complexity of defrost timer wiring depends on the number of functions controlled during the

A

B

C

U.S. Cooler Company

Figure 21-21. Forced-draft evaporator mounting locations. A—Forced-draft evaporator mounted in the upper corner of a cabinet. B—Two-fan forced-draft evaporator mounted on the back wall of a bakery storage room. C—Forced-draft evaporators mounted along the ceiling of a florist storage room.

Copyright Goodheart-Willcox Co., Inc.

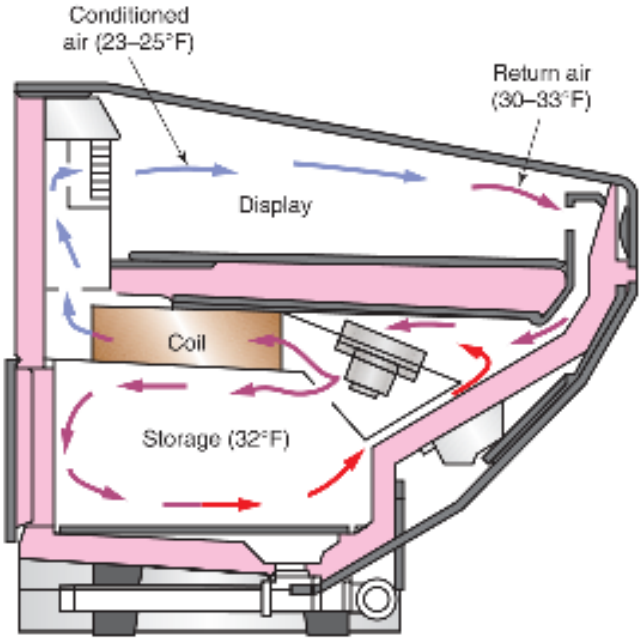

Goodheart-Willcox Publisher

Figure 21-22. A cross section showing the airflow pattern of a double-duty display case. Note the temperature differences between the display section and the storage section.

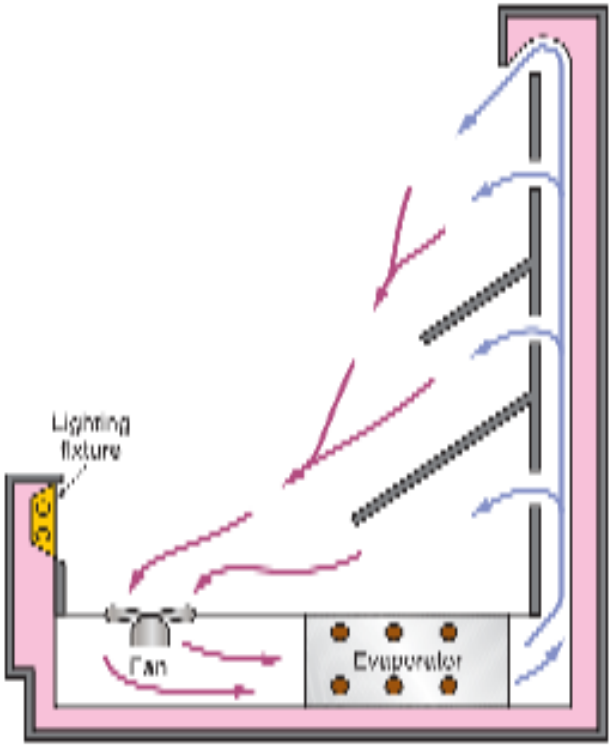

Goodheart-Willcox Publisher

Figure 21-23. This diagram shows an open display cover with a forced-draft evaporator located in the base of the cabinet.

A

B

Rose Air Products Corporation, Product Test Rack, Co., Inc.

Figure 21-24. Defrost timers. A—This electronic defrost timer has 15 minute interval defrost switches set along the 24 hour clock. B—This mechanical defrost timer is from industrial cold time-terminated.

Copyright Goodheart-Willcox Co., Inc.

defrosting process. Some defrost timers open the hot-gas solenoid valve, stop the fan motors, energize auxiliary electric heater elements, and run the compressor. A defrost timer also may be used to prevent the start of the normal refrigeration cycle until the evaporator temperature is low enough. The more devices a defrost timer controls, the more complicated its wiring will be. Some basic electrical circuits with defrost timers are shown in **Figure 21-25**.

Each evaporator design has its own requirements for successful operation. Some evaporators need to be defrosted after each refrigeration cycle and some every few hours. Others need defrosting no more than once a day. The length of defrost time can be adjusted on most systems. A defrost timer may activate the defrost cycle at preset times of the day or after a given number of hours of compressor operation.

Some defrost timers count down to the next defrost cycle continuously, others count down only when the compressor is running. These defrost timers are wired in parallel with the system compressor. In this way, the defrost timer and compressor are both supplied with the same power for the same amount of time. These defrost timers will start the defrost cycle after a set amount of compressor running time has been recorded.

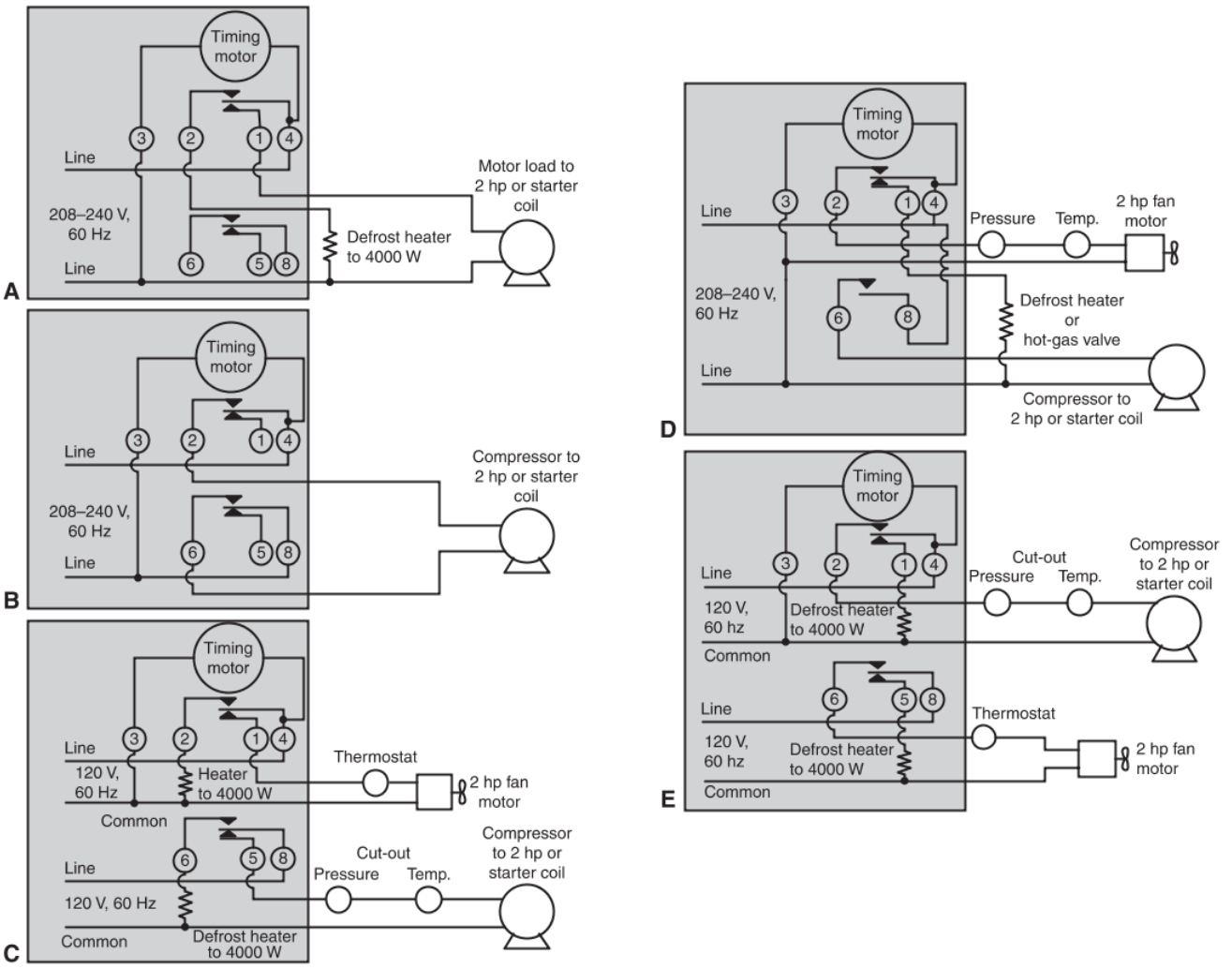

Goodheart-Willcox Publisher

Figure 21-25. Wiring diagrams for several types of defrost control arrangements. A—Circuit controlled by an SPDT (single-pole, double-throw) switch that activates an electric heater defrost as it shuts off the compressor. B—Circuit controlled by a DPST (double-pole, single-throw) switch that only shuts off the refrigerating unit. C—Circuit controlled by a DPDT (double-pole, double-throw) switch. It shuts off a compressor and a fan and turns on two electrical heater defrost circuits. D—Circuit for delayed fan shutoff during defrost and for turning on one defrost circuit. E—Circuit controlled by a DPDT (double-pole, double-throw) switch for delayed fan shutoff and two defrost circuits.

Copyright Goodheart-Willcox Co., Inc.

Three variables are used to control defrost timer operation: time, temperature, and pressure. Different combinations of these variables are monitored and used in starting and stopping defrost cycles. Three common combinations of defrost timer operation control are the following:

- Time-initiated, time-terminated.
- Time-initiated, temperature-terminated.
- Time-initiated, pressure-terminated.

Time-Initiated, Time-Terminated Defrost Timers

A ***time-initiated, time-terminated defrost timer*** turns on defrost operations at a preset time and ends the defrost operation at a preset time. These timers are used only on systems where the length of time for defrosting and the length of time between defrosting can be determined and will remain constant.

While many defrost timers initiate a defrost cycle by time, they often terminate the defrost cycle based on temperature or pressure. A defrost timer often has a time termination setting, but this may be best used as a backup or safety measure to ensure that the evaporator is not overdefrosted. ***Overdefrosting*** is a condition in which a defrost cycle continues long enough to raise the temperature of the conditioned space too high. This temperature rise can begin to thaw products in a refrigerated or frozen display case. The formation of ice crystals on the outside of a product indicates the product began to thaw and then refroze during the refrigeration cycle.

To prevent overdefrosting, defrost timers often use temperature termination or pressure termination to stop the defrost cycle before the timer stops the cycle. This practice conserves energy and prevents thawing and refreezing of products, which can spoil or damage some products.

Time-Initiated, Temperature-Terminated Defrost Timers

A ***time-initiated, temperature-terminated defrost timer*** turns on defrosting operations at a preset time and stops defrosting operations when the evaporator reaches a preset cut-out temperature. A timer starts the defrost cycle. The control returns the system to normal operation when the evaporator temperature reaches the cut-out temperature, **Figure 21-26**. The defrost cut-out temperature should be set high enough that it allows the frost to melt and drain off the coil. A defrost termination switch is installed in a location where the last of the frost will leave the evaporator before defrosting is complete. Once temperature rises high enough, the defrost control will switch the system back to the cooling mode. An electrical diagram for a time-initiated, temperature-terminated defrost timer is shown in **Figure 21-27**.

Johnson Controls, Inc.

Figure 21-26. Defrost control with a timer and sensing bulb. The timer starts the defrost action. Located on the evaporator, the sensing bulb signals the control when the frost has melted so the system can be returned to cooling mode.

Temperature-terminated defrost control can also be accomplished using thermistors that react to the temperature of the evaporator. If the temperature of the evaporator drops below the defrost cut-in temperature, a signal from the thermistor tells the defrost control to start the defrost cycle. When the evaporator coil reaches the defrost cut-out temperature (around 40°F) the signal from the thermistor tells the defrost control to end the defrost cycle. Normal operation of the refrigeration system begins again.

Time-Initiated, Pressure-Terminated Defrost Timers

A ***time-initiated, pressure-terminated defrost timer*** turns on defrost operations at a preset time, and it turns off defrost operations when a preset pressure is reached. Pressure termination of the defrost cycle is often done using a sensing bulb and pressure switch. When pressures correspond to a temperature in which all the frost has been melted, pressures will be high enough to return the system to the refrigeration cycle.

Condensate Pumps

Moisture produced from defrost condensation should be removed from the evaporator and conditioned space. Often, condensation is removed through drain piping. When condensation cannot easily flow downward through a drain, it may need to be pumped elsewhere. A ***condensate pump*** is designed to pump condensate from the system to a drain, **Figure 21-28**. A condensate pump is used when condensate cannot drain properly due to gravity alone, but must be pumped up to a higher elevation or remote location where a drain is available.

Copyright Goodheart-Willcox Co., Inc.

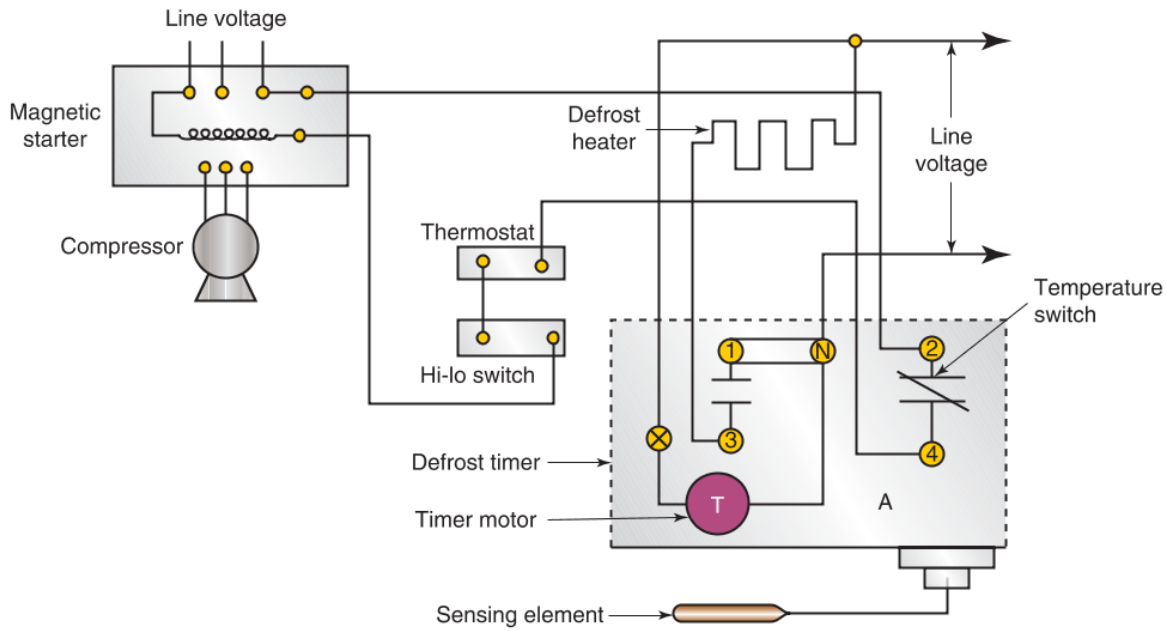

Paragon, Invensys Climate Controls Americas

Figure 21-27. This wiring diagram for a defrost control has the timer motor start the defrost cycle, and a temperature switch returns the system to normal operation. The temperature switch is wired into the compressor control circuit.

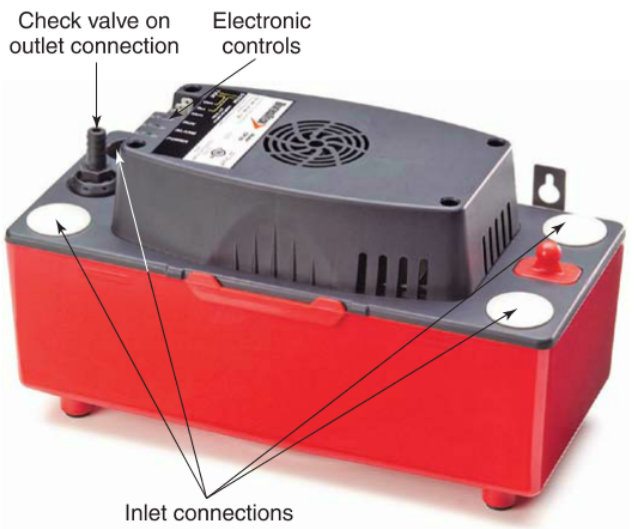

DiversiTech Corporation

Figure 21-28. System design often necessitates the use of a condensate pump to remove moisture.

Code Alert

Condensate Removal

Local building codes will specify the requirements and restrictions for condensate drainage. Codes will describe the acceptable disposal methods, acceptable piping materials and designs, and any special provisions for both evaporator condensate and condensate from high-efficiency furnaces.

A condensate pump is mounted on the drain and is self-priming. It is air cooled and is capable of operating continuously, providing the vents are not covered. A float switch activates the pump when the water depth is sufficient and shuts the pump off when the condensate has been removed.

Pro Tip

Condensate Pumps in Air Conditioning and Heating

Condensate pumps are also used to drain condensate produced by comfort cooling systems and the slightly acidic condensate produced by high-efficiency gas furnaces. Therefore, condensate pumps often have two intakes: one for an evaporator condensate drain line and the other for the furnace.

Caution

Condensate Cleaning

Since defrosting results in moisture that could promote the growth of bacteria, mold, mildew, and algae, it is important to clean the evaporator, drain pans, and drain lines frequently.

21.1.10 Evaporator Defrosting Methods

Defrosting systems heat the evaporator from either the inside or outside to melt the frost. There are six main defrosting methods used in commercial evaporators:

Copyright Goodheart-Willcox Co., Inc.

- Hot-gas defrost.
- Nonfreezing solution defrost.
- Water defrost.
- Electric heat defrost.
- Off-cycle defrost.
- Pump-down defrost.

Some of these methods can be combined for more effective defrosting.

Hot-Gas Defrost System

In a ***hot-gas defrost*** system, the evaporator is defrosted by a hot-gas refrigerant vapor pumped directly from the compressor discharge line into the evaporator tubing. The line from the compressor discharge is usually connected between the metering device and the evaporator. It is opened and closed by a solenoid valve.

At a predetermined time, usually when the system is not in use, a defrost timer initiates defrosting. For hot-gas defrosting, the following operations occur: the compressor runs, the hot-gas solenoid valve opens, and the evaporator fans stop turning. Hot, compressed vapor rushes through the hot-gas defrost valve and into the evaporator, melting accumulated frost. The refrigerant then returns to the compressor through the suction line, **Figure 21-29**.

A hot-gas defrost system will usually defrost the evaporator in 5 to 10 minutes. Defrost water must be kept from freezing in the drain pan and tube. Therefore, part of the hot-gas defrost line may be installed under the drain pan and the drain pipe. Otherwise, a small electric heater may be installed in this location, **Figure 21-30**.

A system similar to hot-gas defrost is a hot-gas bypass system. It performs a similar function but for a different purpose. Refer to Chapter 22, *Refrigerant Flow Components*, and Chapter 49, *Commercial Refrigeration—System Configurations* for additional information on hot-gas bypass systems.

Low-Pressure Adjusting Hot-Gas Defrost

One type of hot-gas defrost valve operates by reacting to low-side pressure. It opens wider as low-side

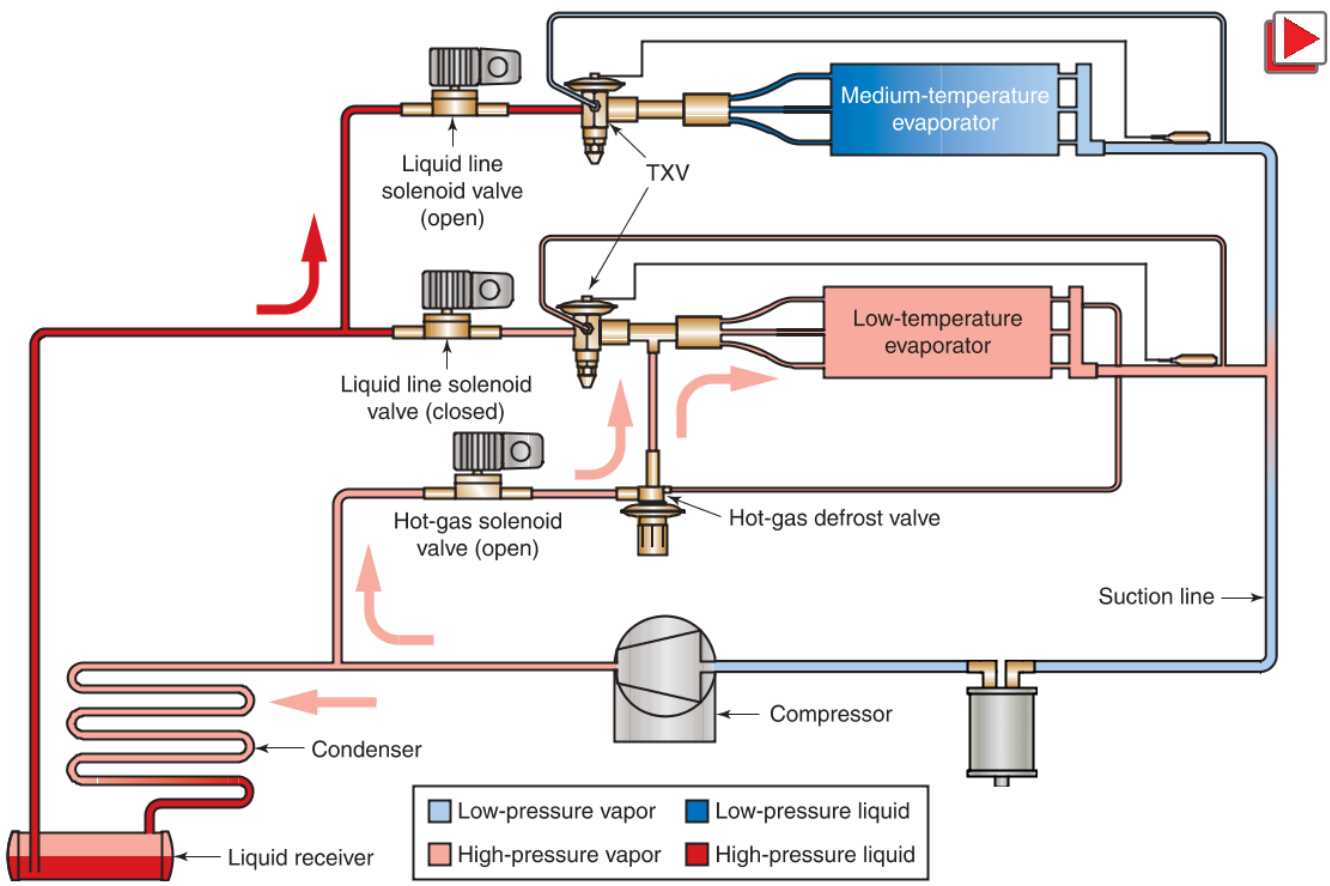

Goodheart-Willcox Publisher

Figure 21-29. System diagram showing hot-gas defrosting. Hot-gas refrigerant flows from the compressor discharge to the inlet of the low-temperature evaporator.

Copyright Goodheart-Willcox Co., Inc.

pressure drops and closes as low-side pressure rises. These often have an adjustable bellows connected to the sensing element to change the opening pressure. Refer to a refrigerant table in a manufacturer manual showing the opening pressures and ranges before calibrating such valves, **Figure 21-31**.

Sealed Unit Parts Co., Inc.

Figure 21-30. Drain/condensate pan with a built-in electric heater to prevent accumulated moisture from freezing.

Parker Hannifin Corporation

Figure 21-31. Hot-gas bypass valve controlled by low-side pressure.

Reverse Cycle Hot-Gas Defrost

A variation of the standard hot-gas defrost system is the ***reverse cycle hot-gas defrost*** system, which defrosts an evaporator by reversing the flow of refrigerant through the system. During reverse cycle, the evaporator functions as a condenser to melt the accumulated frost.

A system that uses reverse cycle hot-gas defrost is shown in **Figure 21-32**. One diagram shows the refrigeration cycle. The other diagram shows the defrost cycle. A timer starts the defrost action:

1. When defrosting starts, a solenoid valve opens a line connected between the top of the liquid receiver and the suction line near the compressor inlet.
2. A crankcase pressure regulator reduces the high-pressure gas from the liquid receiver before it enters the compressor inlet.
3. A three-way solenoid valve closes the passageway from the suction line to the compressor inlet. It also opens a passageway allowing hot gas from the compressor discharge bypass line to enter the suction line and flow backward through the evaporator. The hot gas condenses as it warms the evaporator and melts the frost.
4. The condensed refrigerant bypasses the TXV through a check valve connected in parallel with the TXV and the liquid line solenoid valve. The condensed refrigerant travels to the liquid receiver flowing backward through the liquid line.
5. A check valve in the condenser drain tube keeps refrigerant from backing up into the condenser from the liquid receiver.
6. A pressure-regulating valve maintains proper hot-gas pressures and temperatures on the high and low sides. This valve is located at the condenser inlet.
7. A defrost thermostat monitoring evaporator temperature returns the system to normal operation.

A variation of a reverse cycle hot-gas defrost system is designed using a four-way reversing valve. These reversing valves are installed much like those used in heat pumps. Heat pump operation is described in detail in Chapter 40, *Heat Pumps*.

Reverse Cycle Hot-Gas Defrost for Multiple Evaporators

In commercial refrigeration systems having multiple evaporators, each evaporator is defrosted one at a time using the reverse cycle hot-gas defrosting method. While one evaporator is defrosting or acting as a condenser, the other evaporators act as evaporators absorbing heat to use in defrosting the single evaporator. Operating in this manner, the liquid refrigerant coming from the defrosting evaporator is evaporated,

Copyright Goodheart-Willcox Co., Inc.

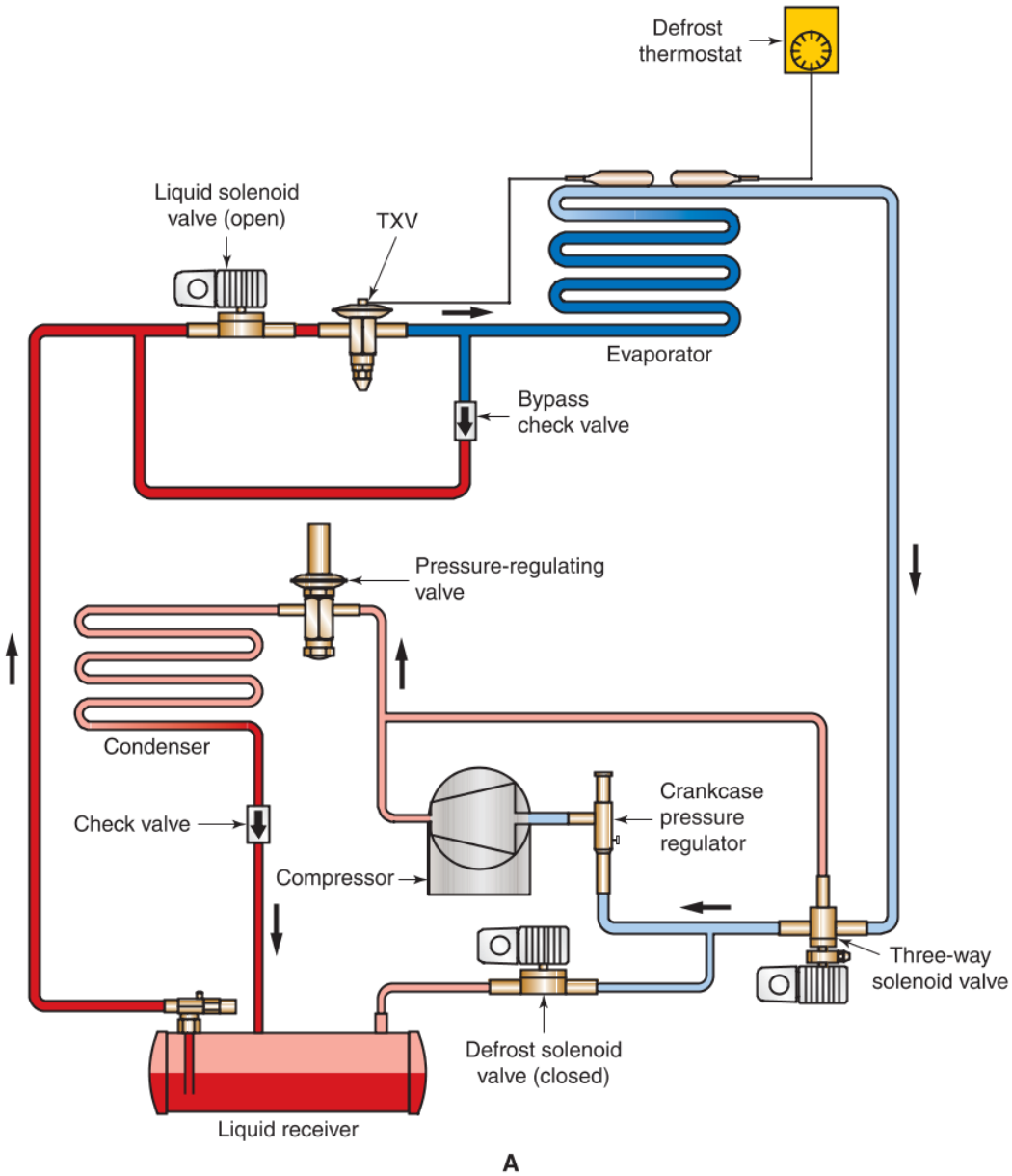

Goodheart-Willcox Publisher

Figure 21-32. System diagrams for normal two-pipe, reverse cycle hot-gas defrosting system. A—For the cooling cycle, note the direction of refrigerant flow through the compressor and to the condenser. B—For the defrost cycle, note that the hot gas from the compressor and receiver travels backward to the evaporator through the suction line. Condensed liquid refrigerant exiting the evaporator travels around the TXV through a bypass check valve and returns to the liquid receiver through the liquid line.

ensuring that no liquid refrigerant will reach the low side of the compressor. Refer to **Figure 21-33** while reading the steps that describe how reverse cycle hot-gas defrost works on multiple-evaporator systems.

1. A timer triggers each evaporator to defrost at a different time. If evaporator 3 (EV 3) is to defrost, at the start of the defrost cycle, the liquid line pressure differential valve (L1) creates a 20 to 40 psi drop to allow defrost and regular operational flow.
2. The hot-gas solenoid on evaporator 3 (HGS 3) opens, while the suction line solenoid valve (SLS 3) for the same evaporator closes, causing hot gas from the compressor to rush into evaporator 3 flowing backwards. The liquid line solenoid valve

Copyright Goodheart-Willcox Co., Inc.

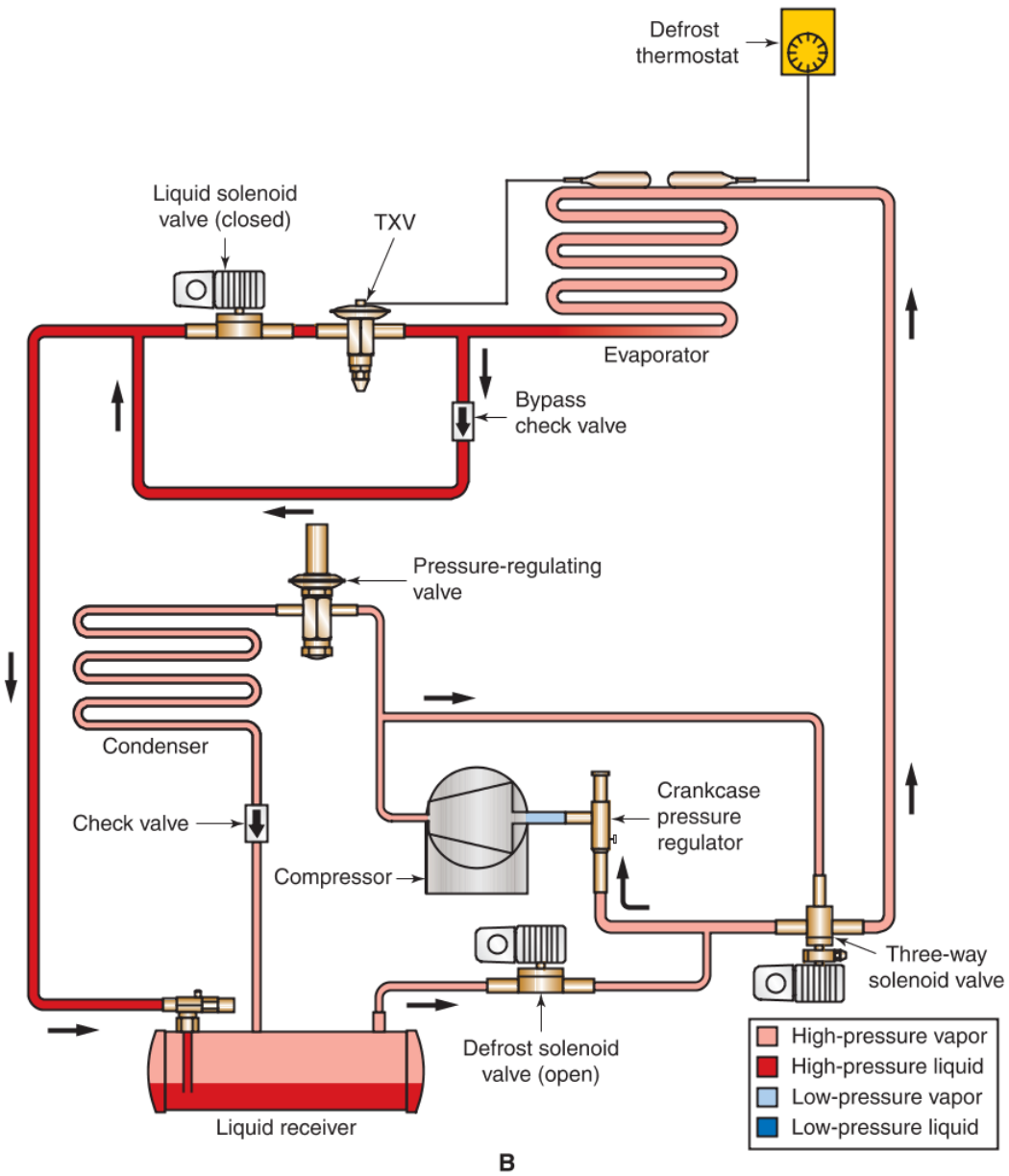

Goodheart-Willcox Publisher

Figure 21-32. Continued

(LLS 3) regulating evaporator 3 closes to prevent TXV 3 from trying to meter refrigerant into the evaporator.

3. In evaporator 3, the frost melts by absorbing the heat of the hot-gas refrigerant. This heat transfer condenses the hot gas into a liquid. In this way, evaporator 3 acts as a condenser during its defrosting.
4. After flowing through evaporator 3, the liquid refrigerant enters the liquid line through evaporator 3's bypass check valve (C3), bypassing evaporator 3's thermostatic expansion valve (TXV 3) and closed liquid line solenoid (LLS 3).
5. Because of continued high-side refrigerant flow through L1 and C4, the liquid refrigerant exiting

Copyright Goodheart-Willcox Co., Inc.

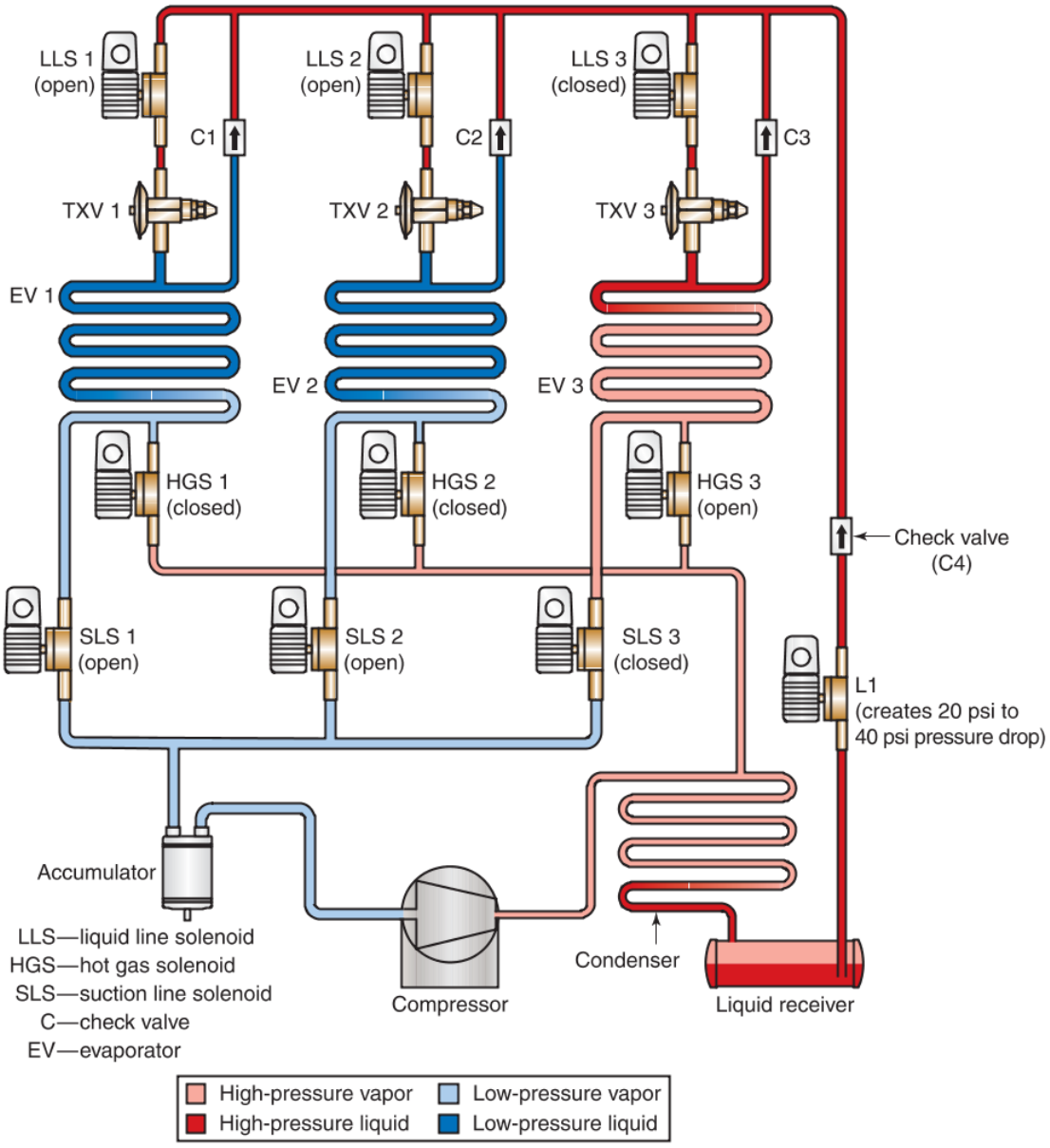

Goodheart-Willcox Publisher

Figure 21-33. Diagram for a reverse cycle hot-gas defrost system for a multiple-evaporator refrigeration system, showing how two evaporators act as evaporators, while the defrosting evaporator acts as a condenser.

evaporator 3 cannot flow back through the liquid line. It moves through the liquid line solenoid valves (LLS 1 and LLS 2) into evaporators 1 and 2.

6. Liquid line solenoids 1 and 2 (LLS 1 and LLS 2) lead the liquid refrigerant through the thermostatic expansion valves (TXV 1 and TXV 2) and into evaporators 1 and 2.
7. The thermostatic expansion valves (TXV 1 and TXV 2) reduce the flow and pressure of the refrigerant as it enters evaporators 1 and 2. There, the refrigerant absorbs heat and evaporates into a gas. While evaporator 3 acts as a condenser during its defrosting, the other evaporators continue to function as evaporators.
8. Exiting evaporators 1 and 2, the vapor refrigerant flows through the suction line. Hot-gas solenoids 1 and 2 (HGS 1 and HGS 2) both remain closed, so the refrigerant vapor flows through suction line solenoids 1 and 2 (SLS 1 and SLS 2).

Copyright Goodheart-Willcox Co., Inc.

9. The vapor refrigerant flows through the accumulator before the last length of suction line leads to the compressor.

For reverse cycle hot-gas defrost on multiple-evaporator systems, a single valve may replace a hot-gas solenoid valve and a suction line solenoid valve for each evaporator, **Figure 21-34**. Both the suction line solenoid valve and the hot-gas solenoid valve share a common connection at the evaporator outlet. However, the suction line solenoid valve connects to the compressor inlet (through the suction line), and the hot-gas solenoid valve connects to the compressor outlet (through the discharge line). Since there are only three separate connections among the two valves, only three ports are necessary for a single replacement valve.

In this type of valve, refrigerant enters from the evaporator outlet connection and exits through the suction line connection during the normal refrigeration cycle. During defrosting, hot gas enters at the discharge line connection and exits at the evaporator outlet connection. When this solenoid valve is de-energized, there is an open passageway between the evaporator and the suction line. The valve to the discharge line is closed. The internal construction of a hot-gas, suction-line combination solenoid valve can be seen in **Figure 21-35**.

When the solenoid valve is energized, high-pressure gas from the discharge line flows through the bleed tube and pushes down on the double valve. This action closes the top passageway, leading to the suction line. It stops flow from the evaporator into the suction line, and opens the bottom passageway connected to the discharge line. High-pressure hot gas flows from the discharge line through the valve and into the evaporator.

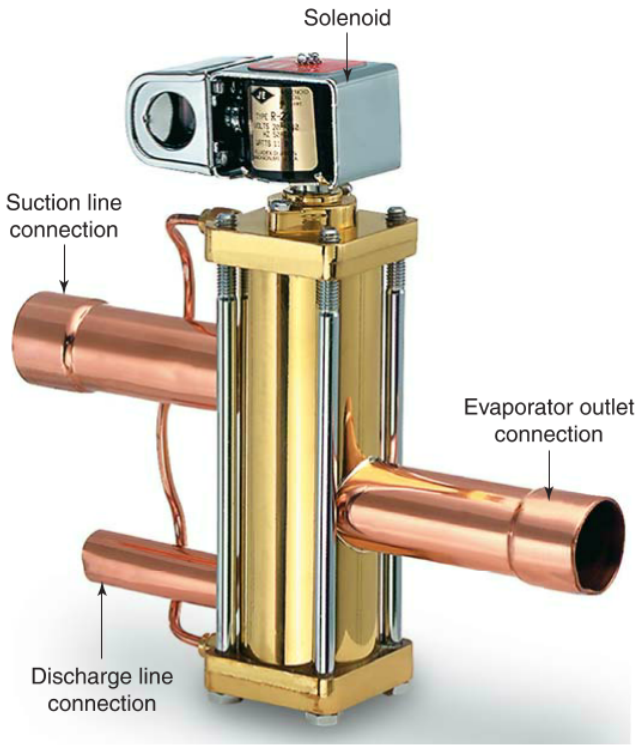

Parker Hannifin Corporation

Figure 21-34. Solenoid valve that combines the function of the suction line solenoid valve and hot-gas solenoid valve.

Nonfreezing Solution Defrost

The ***nonfreezing solution defrost*** system circulates a heated, nonfreezing solution in tubing near and around the evaporator during the Off cycle to melt ice and frost. This system has been used for years. An additional component used in this system is a container in which most of the brine or nonfreezing solution is stored and heated. There are two methods for heating the nonfreezing solution: hot gas and electric heat.

For hot-gas heating, the system's nonfreezing solution container is a heat exchanger. This heat exchanger has separate passages for the refrigeration system refrigerant that are isolated from the nonfreezing solution. Hot-gas refrigerant from the compressor is piped through the nonfreezing solution's container during the refrigeration cycle. The hot-gas refrigerant heats the solution for the entire refrigeration cycle. When a defrost cycle begins, the nonfreezing solution is thoroughly preheated.

For electric heating, electric heaters in the nonfreezing solution's container are energized. These heaters warm the solution during the refrigeration cycle. When defrosting begins, the solution is preheated.

When the refrigeration system cycles off for defrosting, a defrost timer closes the liquid line solenoid valve and shuts off the evaporator fan. The nonfreezing solution is pumped through its own piping along the drain line, drain pan, and evaporator tubing. Then it returns to its heated container. **Figure 21-36** shows a diagram for a defrost cycle using electrically heated nonfreezing solution.

Water Defrost

A ***water defrost*** system works by running tap water over the evaporator when the refrigeration system is off. This is done either manually or automatically. During this operation, the evaporator louvers are closed. The water may be sprayed over the evaporator or fed to a pan located over the evaporator. Holes in the pan feed the water evenly over the evaporator surface. The water is warm enough to melt the ice. The water then drains away into the evaporator drain pan.

Copyright Goodheart-Willcox Co., Inc.

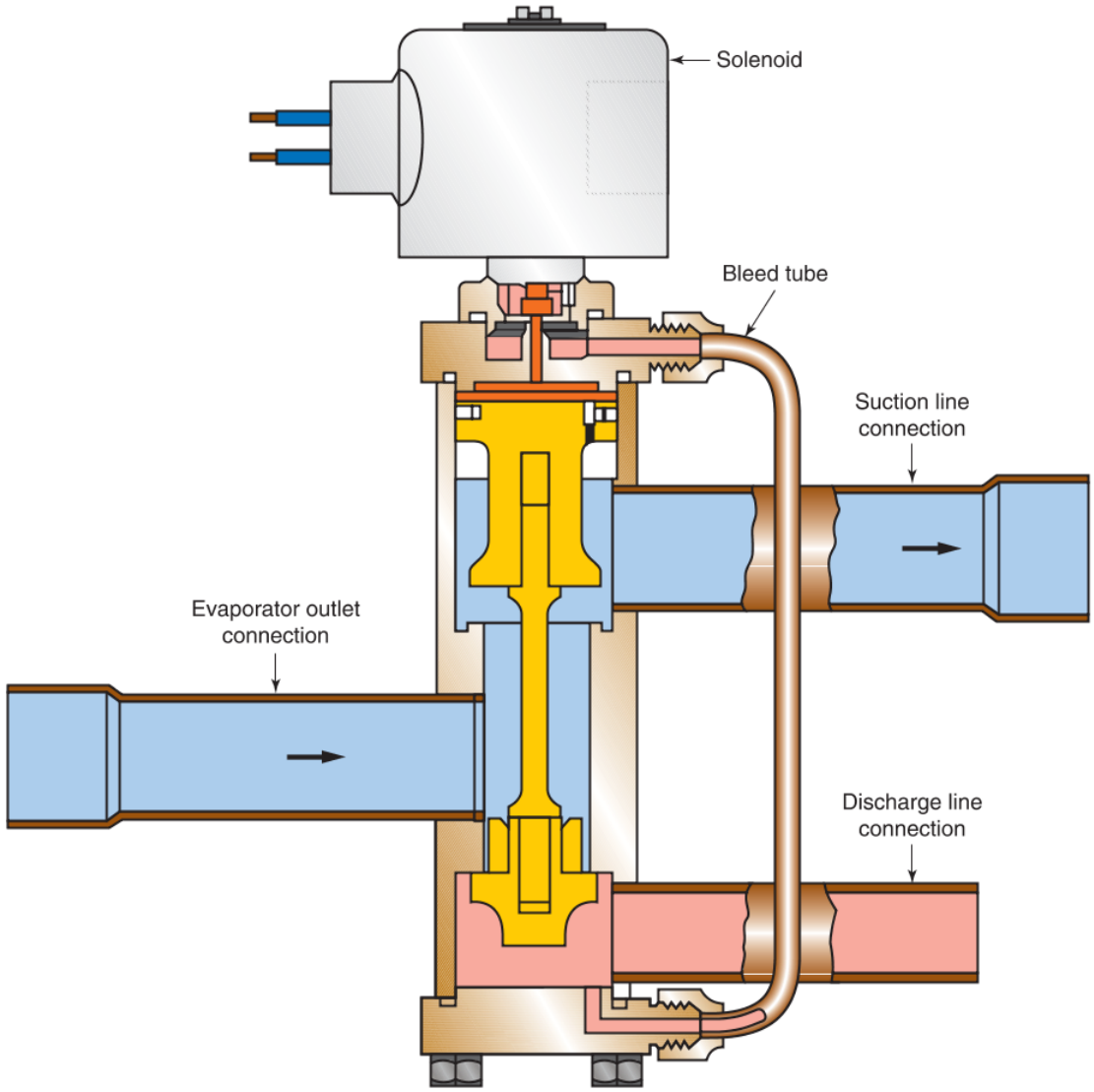

Parker Hannifin Corporation

Figure 21-35. Internal construction of a hot-gas defrost solenoid valve. Note the small tubing connection from the discharge connection to the pilot valve bleed.

Drainage from the water lines must be complete before the unit is turned on or the water may freeze and cause a blockage in the drain.

In a manual system, an operator opens a manual water line valve to supply the water for the defrosting operation. To manually drain a system, the operator closes the water line valve and opens a drain valve. This empties the water line going to the evaporator. When the system is drained, it can be returned to cooling mode, **Figure 21-37**.

In an automatic system, a timer initiates and terminates the defrost operation. The timer opens a solenoid valve to supply water for the defrosting operation. Small copper tubing connects the water line to the drain. When the timer closes the solenoid valve at the end of the defrost operation, the water in the system gradually drains through the small diameter tubing.

Special systems have been designed to defrost by spraying a lithium chloride brine solution over the evaporator. The brine solution is collected at the bottom of the evaporator, and a pump returns the solution back to the spray head. Eliminator plates are needed at the evaporator outlet to prevent brine spray from passing into the refrigerated space. The eliminator plates

Copyright Goodheart-Willcox Co., Inc.

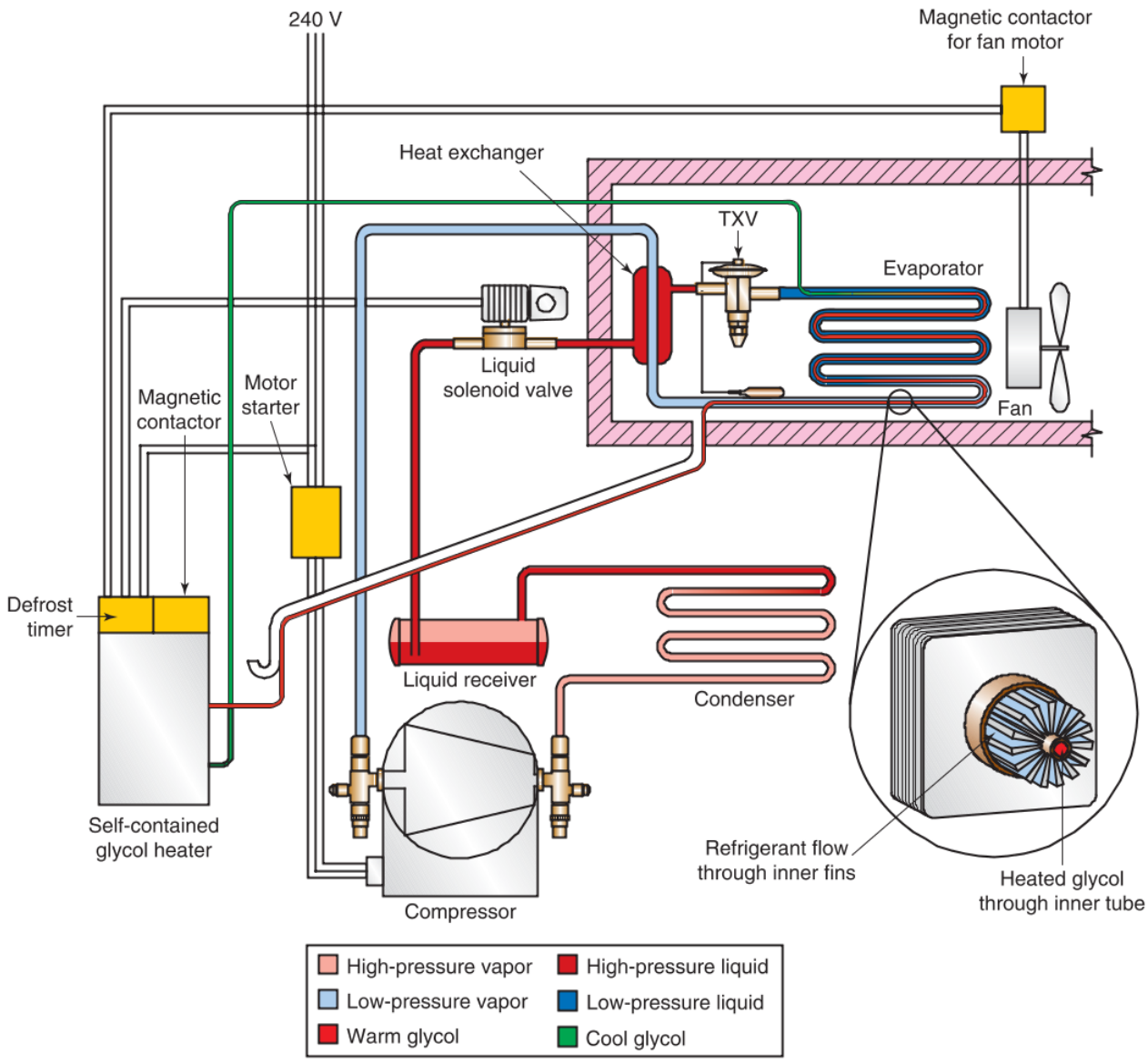

Goodheart-Willcox Publisher

Figure 21-36. Nonfreezing solution defrost system. During defrosting, glycol solution is pumped through tubing running within the evaporator tubing and along the drain piping.

are wire screens that cause any mist in the conditioned air to coalesce into water droplets, which then drop out of the airstream and are drained away.

Electric Heat Defrost

Electric heat is popular for defrosting low-temperature evaporators. In ***electric heat defrost***, electric heating coils are installed in an evaporator, around it, or within the refrigerant passages and energized to melt ice and frost buildup.

One method uses electric heating elements mounted in front of the evaporator coil, underneath the coil, under the drain pan, and along the drain pipe. A defrost timer stops the refrigeration cycle and closes the liquid line. It then directs the compressor to pump the refrigerant out of the evaporator and into the liquid receiver. Then, the electric heaters are turned on.

Heaters melt the frost from the evaporator, and the water drains away. Evaporators become warm enough to ensure that all frost is gone. After the evaporator has been defrosted, a thermostat on the evaporator returns the system to cooling mode, but delays fan operation until the evaporator temperature falls.

Copyright Goodheart-Willcox Co., Inc.

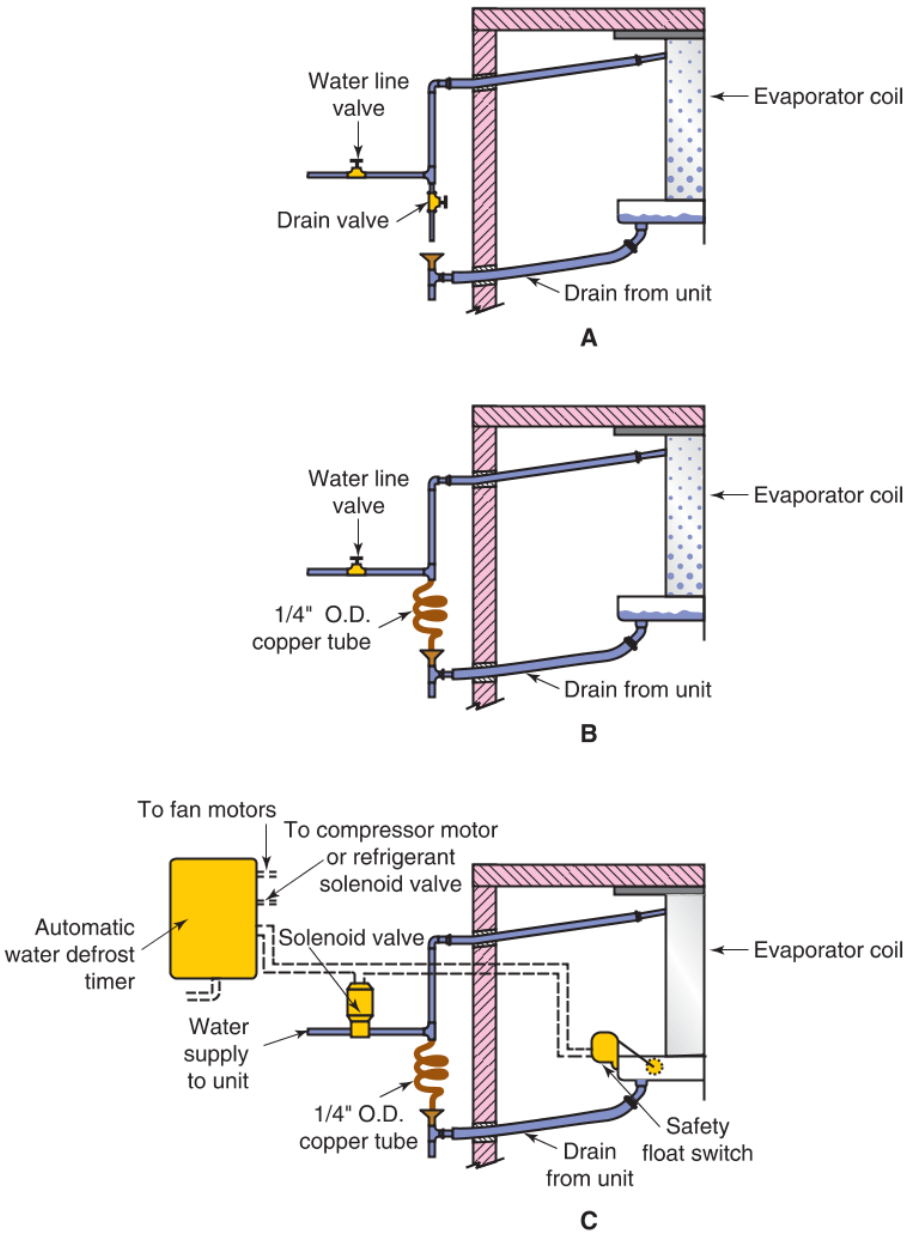

Goodheart-Willcox Publisher

Figure 21-37. Water defrost system diagrams. Three methods of operation are shown. A—Manual defrost and manual drain. B—Manual defrost and automatic drain. C—Automatic defrost.

Another way of using an electric heat defrost system is with a double-wall tube or a tube-within-a-tube evaporator. The evaporator refrigerant passes through the passageway between the tubes during normal refrigeration. The center tube contains electric heating elements. For the defrost operation, the system is stopped, and the electric heating elements are turned on. Thereby, the evaporator tubes cause defrosting from the inside, **Figure 21-38**.

Off-Cycle Defrost

An ***off-cycle defrost*** system circulates air from the conditioned space over the evaporator during the Off cycle. During the On cycle, frost accumulates on the evaporator as it circulates the below-freezing refrigerant that removes heat from the conditioned space. However, when the compressor stops, heat is no longer removed, and the temperature begins to rise. During the Off cycle, evaporator fans continue

Copyright Goodheart-Willcox Co., Inc.

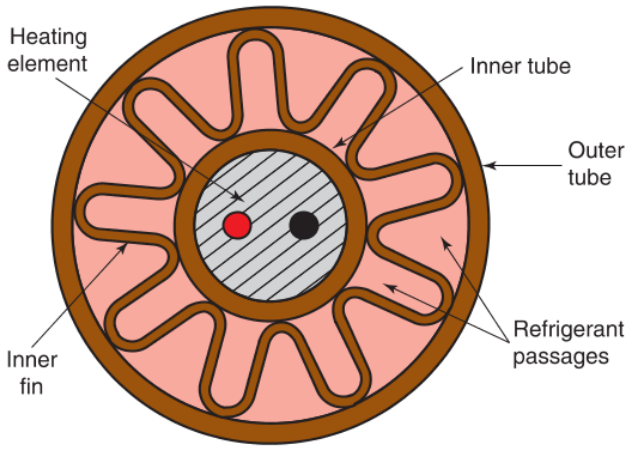

Goodheart-Willcox Publisher

Figure 21-38. As shown here, some electric defrost systems have electric heating elements installed inside the evaporator tubing.

to circulate air. The heat in the circulated air melts the frost.

Thermostats on refrigeration systems that use off-cycle defrost provide a wide temperature differential. The compressor cut-in temperature is high, and the cut-out temperature is low. The large temperature differential allows enough time for the evaporators to defrost before the compressor cycles on again. Off-cycle defrost may also be called *warm air defrost*. This type of defrost system can be used only if the air in the conditioned space is above freezing.

Pump-Down Defrost

In a ***pump-down defrost*** system, refrigerant is removed from the evaporator to expedite the defrosting process. With no refrigerant in the evaporator to absorb heat, the ice and frost on the outside of the evaporator absorb more heat and melt more quickly.

Pump-down defrost begins as a refrigeration system is cycling off. As the evaporator fan circulates air and the compressor circulates refrigerant, the temperature in the conditioned space drops to a cut-out point. When the thermostat is satisfied, it opens the circuit controlling a solenoid valve in the liquid line, called a ***pump-down solenoid***. The pump-down solenoid closes, which stops refrigerant from passing through the TXV into the evaporator. However, the compressor and evaporator fan continue to operate. Since the compressor continues to operate, refrigerant from the evaporator and low side is removed and pumped down into the liquid receiver.

Removing refrigerant from the low side drops suction pressure. Eventually, a low pressure control will sense cut-off pressure and turn off the compressor. The evaporator fan continues to circulate air. As heat builds up, the temperature rises, and the circulated air defrosts the evaporator. Eventually, the rising temperature will initiate the thermostat, which will energize and open the pump-down solenoid valve. Refrigerant will flow through the metering device and into the evaporator and suction line. Suction pressure will rise, and low pressure controls will allow the compressor to turn on for another refrigeration cycle when the thermostat calls for cooling.

The best location for storing the refrigerant during a pump-down defrost is in the liquid receiver on the high side of the system. It is important that the system remove the refrigerant from the evaporator. Refrigerant absorbs heat, which can create frost on the evaporator tubing.

Pump-down defrost systems have an extra relay wired into the compressor circuit in parallel to the normal relay. It is connected to the thermostat circuit. The extra relay operates the start button on the normal starting relay. Therefore, the compressor cannot restart until the thermostat points close, even if pressure rises. This extra relay is called a *nonrecycling relay*.

Pump-down defrost can be used in conjunction with electric heat defrost. Removing refrigerant allows electric heaters to produce heat without having any of that heat wasted by being absorbed into the refrigerant in the system.

21.2 Condensers

While an evaporator is designed to absorb unwanted heat, a condenser is designed to expel unwanted heat. High-temperature, high-pressure vapor refrigerant enters the condenser from the discharge line of the compressor. Heat is rejected from the refrigerant as it flows through the condenser. This causes the refrigerant to change state from a vapor to a liquid. As it continues to lose heat, its temperature drops somewhat. As the refrigerant exits the condenser, it is a warm, high-pressure liquid. The job of the condenser is to release the heat that was absorbed from the conditioned space. Condensers operate under much higher pressure than evaporators, so they are built with stronger tubing.

There are three basic types of condensers: air-cooled, water-cooled, and evaporative. Water-cooled condensers use various tube designs and arrangements. Evaporative condensers spray water over the condenser tubes to cool them down.

21.2.1 Air-Cooled Condensers

Air-cooled condensers are condensers that use the air movement of either natural convection or forced drafts to remove heat from a system's refrigerant.

Copyright Goodheart-Willcox Co., Inc.

These are quite common in residential and commercial systems. Cooling water may be too corrosive or expensive and difficult to arrange. Smaller units use static condensers with thermal airflow (naturally rising air). Most air-cooled condensers are located outside. Outdoor air-cooled condensing units may be mounted on the roof, on the outside wall, or at ground level, **Figure 21-39**.

21.2.2 Water-Cooled Condensers

Water-cooled condensers are condensers that use water as the medium into which system heat is expelled. Water-cooled compressors are sometimes used with water-cooled condensers. With few exceptions, the water flow is through the condenser first. It then flows through the compressor cylinder head and finally into a drain. Water flow is often regulated by an automatic water valve.

Water-cooled condensers are most feasible when inexpensive and usable water is available. Water-cooled condensers require less power than for similarly sized air-cooled condensers. This is due to better heat transfer and lower condenser temperatures and pressures. The saving of electrical power helps compensate for the cost of water used for cooling. Water-cooled condensers are generally built in three styles:

- Shell-and-tube.
- Shell-and-coil.
- Tube-within-a-tube.

Shell-and-Tube Condensers

A ***shell-and-tube condenser*** is composed of a long refrigerant cylinder filled with straight copper tubes filled with cooling water. Water circulates through the tubes, condensing the hot refrigerant vapor into liquid in the cylinder. The bottom part of the shell serves as the liquid receiver, **Figure 21-40**.

The shell-and-tube condenser is compact, needs no fans, and combines the condenser and liquid receiver into one unit. It uses numerous straight tubes inside the receiver with a water manifold on both ends. When these manifold ends are removed, the water tubes can easily be cleaned of deposits. The cylinder body is usually made of steel. Shell-and-tube condensers are also sometimes called *shell-and-pipe condensers*.

Shell-and-Coil Condensers

A ***shell-and-coil condenser*** consists of a coil of copper water tubing winding around the inside of a metal refrigerant shell. It is very much like the shell-and-tube water-cooled condenser. It serves as both a condenser and a liquid receiver, **Figure 21-41**.

Goodheart-Willcox Publisher

Figure 21-39. This forced- air condenser for a commercial air conditioning application is installed on the building's roof.

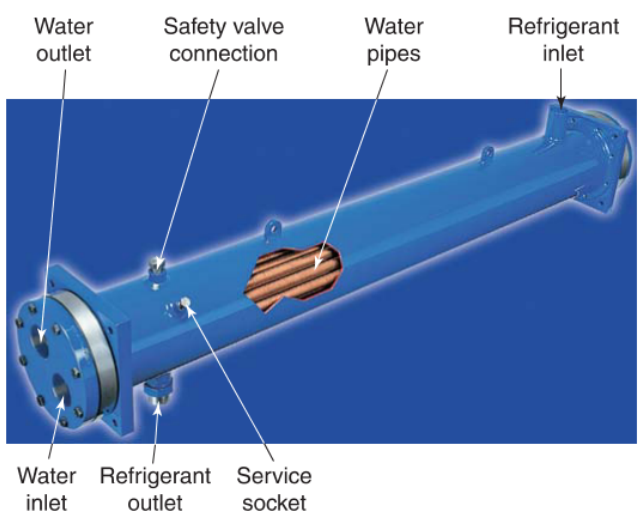

Alfa Laval Inc.

Figure 21-40. A typical shell-and-tube condenser-liquid receiver. Note the straight water pipes running lengthwise. On some models, the water pipes may be finned to improve heat transfer. The condenser end caps are removable to allow access for cleaning.

Copyright Goodheart-Willcox Co., Inc.

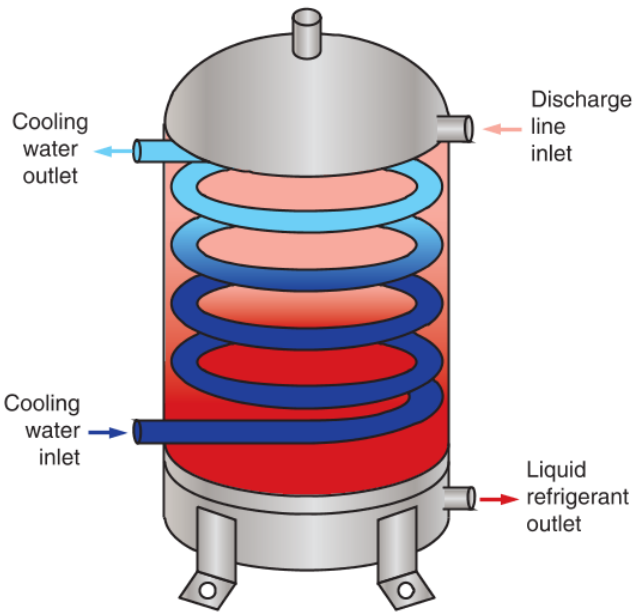

Goodheart-Willcox Publisher

Figure 21-41. Shell-and-coil water-cooled condenser.

The shell-and-coil condensers are often used in smaller commercial units. They are less costly to manufacture; however, they cannot be cleaned mechanically. The water tube must be cleaned with chemicals.

Tube-within-a-Tube Condensers

A ***tube-within-a-tube condenser*** consists of an inner tube through which water flows in one direction and a surrounding outer tube through which refrigerant flows in the opposite direction of the water flow. Water circulates through the inside tube. Hot, compressed vapor circulates through the space between the inner and outer tubes, **Figure 21-42**.

Condensers of this design generally transfer heat very efficiently. Water passing through the inside tube cools the refrigerant in the outer tube. The outside tubing is also cooled by air in the room. Tube-within-a-tube condensers may be constructed in a cylindrical, spiral, or rectangular style, **Figure 21-43**.

Water and refrigerant flow in opposite directions through the separate passageways. Water enters the condenser tube body at the point where the refrigerant exits. The water leaves the condenser at the point where the hot refrigerant vapor enters. This is called a counterflow design.

Counterflow is when two fluids flow in opposite direction of each other. This allows the warmest water to be adjacent to the warmest refrigerant and the coolest refrigerant to be next to the coolest water. Counterflow allows a steady transfer of heat throughout the entire condenser, as there is always a significant temperature difference between the two fluids. It is the temperature difference between two substances that allows the transfer of heat. In electrical terms, temperature difference is like the potential difference between two points that produces the current or the flow of electrons.

As in air-cooled condensers, the greater the surface area, the greater the heat transfer. Some tube-within-a-tube condensers use inner tubing with 6-lead or 8-lead grooves. This design increases heat transfer by increasing the surface area of the tube between the water and refrigerant, **Figure 21-44**.

Tube-within-a-tube condensers can also be made with hard copper pipe. The rectangular tube-within-a-tube condenser uses a straight, hard, copper pipe with manifolds on the ends. When the manifolds are removed, the water pipes may be cleaned mechanically.

21.2.3 Evaporative Condensers

Evaporative condensers provide an efficient means of rejecting unwanted heat from a refrigerant. Housed in an enclosure similar to a cooling tower, an ***evaporative condenser*** uses sprayed water droplets and drafts from fans to produce an evaporative cooling effect on its coils that flow with hot refrigerant vapor, **Figure 21-45**.

In the system shown in **Figure 21-46**, the refrigerant vapor is circulated through a condensing coil, which is continually wetted on the outside by the spray

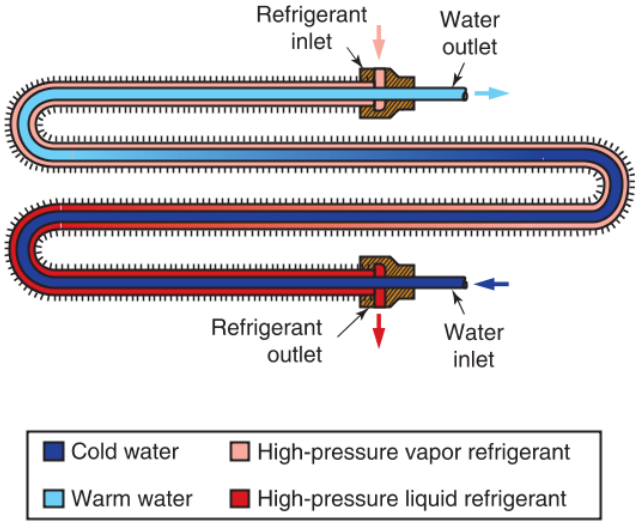

Goodheart-Willcox Publisher

Figure 21-42. Diagram showing how the refrigerant flows through a tube-within-a-tube condenser in the opposite direction as the water.

Copyright Goodheart-Willcox Co., Inc.

A

B

Packless Industries; ClimateMaster

Figure 21-43. A—Tube-within-a-tube condenser shaped into a spiral coil. B—Tube-within-a-tube condenser installed as part of a commercial heat pump.

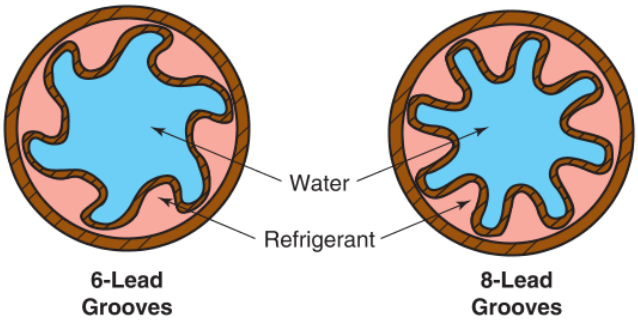

Packless Industries

Figure 21-44. End view of a tube-within-a-tube condenser shows six- and eight-lead (groove) designs to increase heat transfer from the refrigerant to the water.

SPX Corporation

Figure 21-45. Cutaway of an evaporative condenser.

of a recirculating water system. Air is blown over the coil, causing a small portion of the recirculating water to evaporate. The evaporation removes heat from the vapor in the coil, causing it to condense.

In **Figure 21-47**, the water that passes over the condenser coil is then directed over a wet deck surface to be cooled before returning to the basin. As air blown over the wet deck evaporates more of the water, the water that remains will be cooled.

Copyright Goodheart-Willcox Co., Inc.

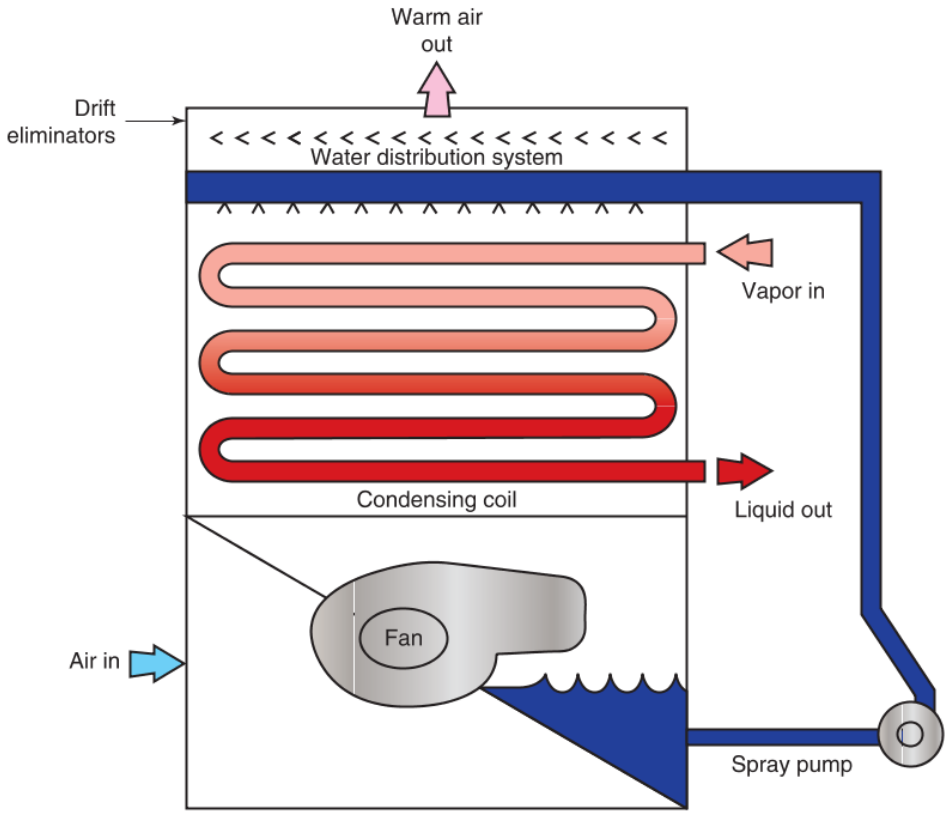

Baltimore Aircoil Company

Figure 21-46. Diagram showing the operation of a single-inlet, counterflow evaporative condenser.

Evaporative Condenser Configurations

Traditional evaporative condensers utilize a counterflow design. As described in the tube-within-a-tube condenser section, *counterflow* means that two fluids are flowing in opposite direction of each other. In evaporator condensers, the air flows in the opposite direction of the water. In most counterflow evaporative condensers, air is drawn in from near the bottom of the condenser and exhausted out the top.

Some evaporative condensers are designed for ***combined-flow***, using both a condensing coil and fill surface for heat transfer. The addition of fill surface to the traditional evaporative condenser design reduces evaporation in the coil section. This reduces the opportunity for scaling and fouling. Combined-flow evaporative condensers employ parallel flow of air and spray water over the coil. In addition, there is a crossflow of air and water through the fill surface. Usually, evaporative condensers are mounted outdoors. However, they may be installed indoors and ducted to the outside.

Operational Considerations

Most systems are subject to wide load variations and substantial changes in ambient temperature conditions. If refrigerant control requires a reasonably constant condensing pressure, some form of capacity control is required. Capacity control is typically accomplished by regulating airflow through the unit by opening and closing the louvers, cycling off the fan, or varying fan speed (variable frequency drives or multispeed motors).

If the refrigerant must be subcooled as it leaves the liquid receiver, the liquid line may be routed through a heat exchanger inside the evaporative condenser. This heat exchanger circulates liquid line and suction line refrigerant through separate but adjacent piping. The cool suction line vapor absorbs heat from the liquid line. This subcools the liquid line refrigerant and superheats the suction line refrigerant. Using this heat exchanger, the temperature of the liquid line refrigerant can be subcooled by 10°F (6°C). When the temperature reaches 45°F (7°C) or lower, the water is shut off. However, the condenser can still carry the load as an air-cooled condenser.

Some evaporative condenser systems have water reservoirs inside the building to protect the water from freezing weather. The reservoirs must be large enough to hold all the water in the system.

Copyright Goodheart-Willcox Co., Inc.

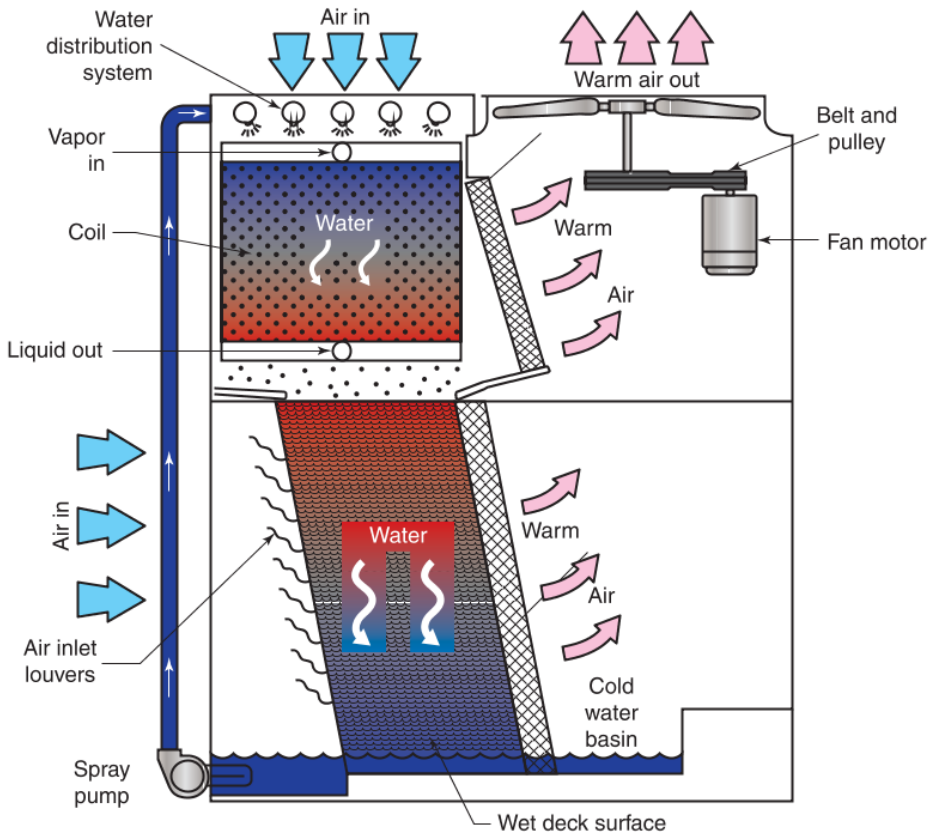

Baltimore Aircoil Company

Figure 21-47. Diagram of the operation of an evaporative condenser system specifically shows how cooling water is chilled using evaporative cooling.

21.2.4 Residential Condensers

Condensers for residential systems vary by manufacturer. Many are air-cooled condensers. Traditionally, these are square, rectangular, or cylindrical. A cooling fan mounted in the center beneath a grille draws air in through the sides of the condenser and expels it upward and out. Louvers, cages, or other structures protect the tubing and fins from damage, **Figure 21-48**.

Newer residential condensers are available in different designs, such as the slim stack, as seen on some ductless split air-conditioning systems, **Figure 21-49**. Ductless systems have become more widely installed. Size and shape of these condensers also varies by manufacturer. More information on ductless systems can be found in Chapter 31, *Ductless Air-Conditioning Systems*.

Tempstar

Figure 21-48. Air-cooled condenser for a residential air-conditioning application using a cage design to protect the tubing.

21.2.5 Commercial Condensers

Commercial condensers operate much like their domestic and residential counterparts. These devices circulate superheated, high-pressure refrigerant that must expel latent and sensible heat to condense and

Copyright Goodheart-Willcox Co., Inc.

subcool the refrigerant. However, commercial condensers must often expel larger quantities of heat than domestic and residential models. To handle these larger heat loads, several different methods of heat rejection have been developed. These methods include using different heat-carrying mediums and varying the condenser's designs, such as its shape, construction, and fin arrangement.

Commercial systems use several types of condensers:

- Air-cooled, fin-and-tube, natural-draft.
- Air-cooled, fin-and-tube, forced-air.
- Water-cooled, shell-and-tube.
- Water-cooled, shell-and-coil.
- Water-cooled, tube-within-a-tube.
- Evaporative.

Commercial Air-Conditioning Condensers

Many commercial air-conditioning condensers use a motor-driven fan for air movement. Fan efficiency may be increased by placing a metal shroud around an air-cooled condenser to direct airflow. Designs vary by manufacturer. Units can be mounted and supported in various ways, depending on the system, **Figure 21-50**.

Fujitsu General America, Inc.

Figure 21-49. A slim-stack air-cooled condenser.

RectorSeal

Figure 21-50. A group of air-cooled condensers for a commercial air-conditioning application mounted on vibration-abating legs and feet.

Copyright Goodheart-Willcox Co., Inc.

Commercial Refrigeration Condensers

The size, range of conditioned space temperatures, and tremendous heat loads handled in commercial refrigeration have led to great variation in condensers. Though some are water-cooled, many are air-cooled. Commercial fin-and-tube, forced-air condensers are built much the same as similar residential condensers. However, they are larger in commercial applications. Outdoor units require about 1000 cfm of condenser air circulation per horsepower. **Figure 21-51** shows an air-cooled condenser that uses six fans.

Many HVACR systems include the compressor and condenser in the same package. However, some commercial refrigeration systems may have the compressors indoors (such as a parallel rack in a mechanical room) and the condensers remotely located outdoors. The compressor discharge line carries the hot high-pressure vapor to the outdoor air-cooled condenser. Condensed liquid is piped back into the building. These units use devices to protect the condenser and to maintain good head pressures in low ambient temperatures. They typically provide protection in temperatures around 50°F (10°C) or lower.

Commercial air-cooled condensers must have four major provisions:

- There must be a head pressure control if the unit is exposed to outdoor weather that may go below the operating cabinet temperature (often seen in climates with a cold season).
- One or more methods of preventing short cycling must be designed into the system.
- A means must also be provided to prevent dilution of the compressor oil by liquid refrigerant.

Bally Refrigerated Boxes, Inc.

Figure 21-51. For this air-cooled condenser, fans draw in air from beneath and exhaust it out the top.

- The completed condensing unit must be constructed and installed so it is virtually weatherproof.

Outdoor air-cooled condensers may not function adequately in strong winds when ambient temperature is low. Under these conditions, the built-in capacity to overcome low ambient temperatures may not be sufficient to overcome the cooling effect produced by the strong winds. Windy conditions can disrupt proper louver and fan operation. The cooling effect may be more than an electric heating element can overcome. Condensing units must be installed in a position to minimize the harmful effects of strong, cold winds. They should also be weatherproofed as well as possible—particularly the electrical components.

21.2.6 Air-Cooled Condenser Construction

The construction of most air-cooled condensers is fin-and-tube or microchannel design. Copper and aluminum are some of the more commonly used materials. Like forced-draft evaporators, air-cooled condensers often have fins attached to their tubing that enlarge their surface area, allowing faster transfer of heat with ambient air. Condenser tubes and fins are frequently arranged in double or triple rows. Many fin designs and constructions have been used, **Figure 21-52**.

As the amount of heat to be rejected increases, it is necessary to add a fan to increase the rate of heat dissipation from the condenser. Most domestic refrigerators and air conditioners use a condensing unit that consists of a compressor, condenser, and condenser fan.

Many air-cooled condensers are made in a particular shape, such as cylindrical, rectangular, or square. The condenser fan is located in the center of the unit. It draws in air through the fin-and-tube construction along the sides of the condenser and blows it out through the top. Shaping the condenser this way forms a large surface area to maximize heat transfer from refrigerant to the air, **Figure 21-53**.

In an effort to maximize refrigerant-to-tube heat transfer, manufacturers have created different grooves, ridge, and pattern surfaces on the inside surface of condenser tubing. Though this feature is not seen by the customer, it increases the heat transfer and overall system efficiency, **Figure 21-54**.

Not all air-cooled condensers are fin-and-tube. Many manufacturers have begun adapting microchannel technology to their condensers. Microchannel condensers can be large or small and made in different shapes for specific applications, **Figure 21-55**.

Copyright Goodheart-Willcox Co., Inc.

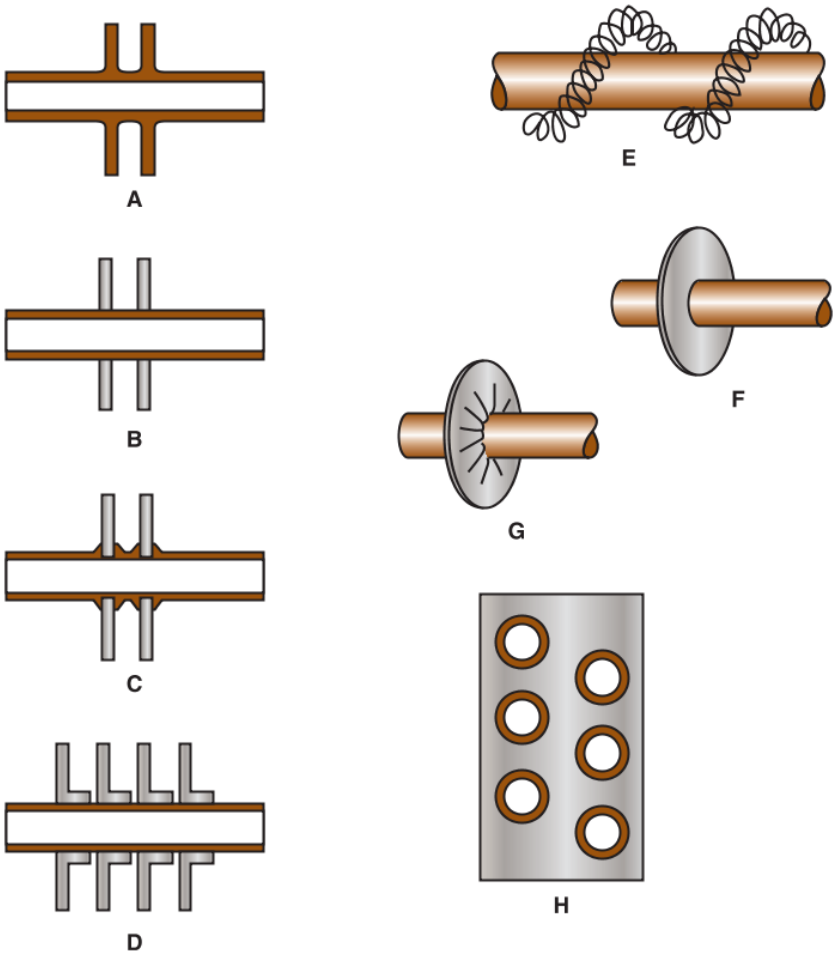

Goodheart-Willcox Publisher

Figure 21-52. Various fin arrangements used in air-cooled condensers. A—Fins are part of the tubing. B—Fins are pressed onto tubing. C—Fins are fastened by crimped tubing. D—Flanged fins are pressed onto the tubing. E—Coiled-wire fin. F—Circular fin. G—Crimped circular fin. H—Side view showing a large plate fin that serves six tubes.

Lordan A.C.S. Ltd

Figure 21-53. Air-cooled fin-and-tube design.

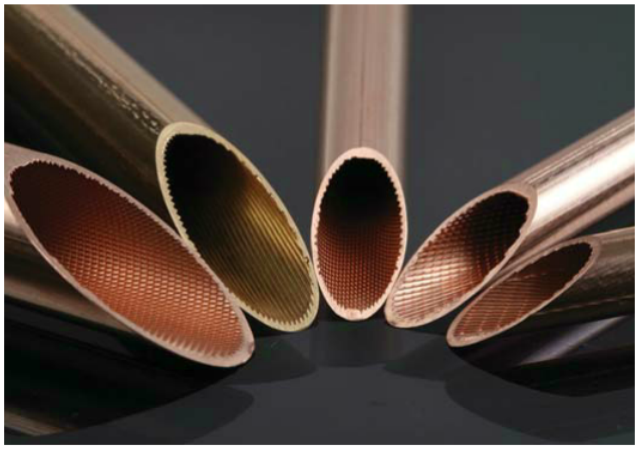

Luvata

Figure 21-54. Various patterns inside tubing for increased heat transfer.

Copyright Goodheart-Willcox Co., Inc.

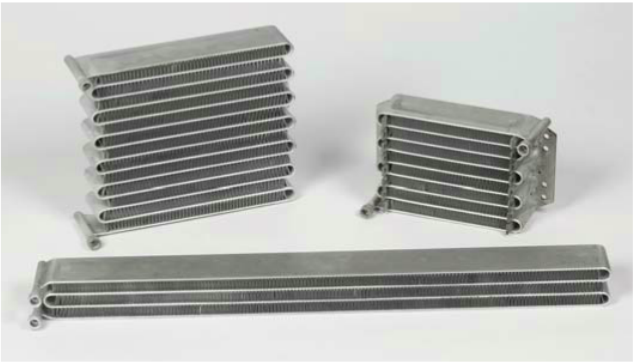

A

B

Alcoil

Figure 21-55. Various microchannel condensers. A—Mini microchannel condensers. B—Flat panel microchannel condensers.

Figure 21-56 illustrates refrigerant and airflow through a microchannel condenser. Refrigerant enters through the header and then flows through the microchannels. The heat travels from the microchannels to the fins. Air flowing across the fins moves the heat to the surrounding air. With so much surface area contacting refrigerant and ambient air, heat transfer is incredibly efficient.

21.3 Head Pressure Control

Many commercial refrigeration systems with air-cooled condensers include some form of head pressure control. ***Head pressure control*** refers to methods of controlling head pressure under varying conditions. These conditions could be rain or high winds, but the main reason for the need for head pressure control is low ambient temperature. This occurs in geographic areas with cold winters.

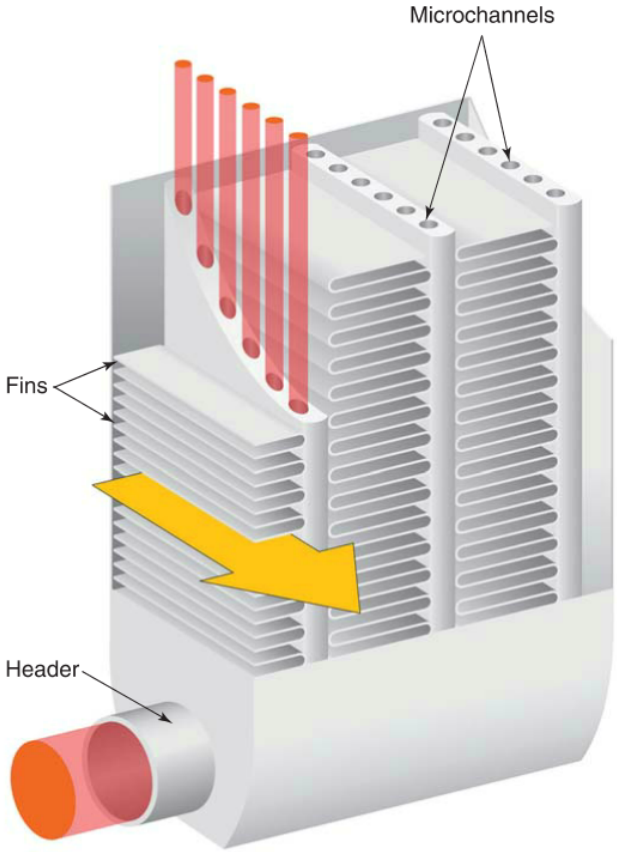

Alcoil

Figure 21-56. Note airflow through the fins and refrigerant flow through the microchannels of this condenser.

Copyright Goodheart-Willcox Co., Inc.

If we apply Gay-Lussac's law to an air-cooled condenser, very low ambient temperatures can cause low head pressure. Remember that in a fixed volume, pressure and temperature rise and fall together. The high side acts as a fixed volume, so when ambient temperature lowers the temperature of the refrigerant on the high side, the pressure also drops. This pressure may drop so low it may even stop the flow of refrigerant through the metering device into the evaporator.

There are several methods of controlling head pressure, such as using electric heating elements, fan cycling and speed control, louver control, and pressure-regulating valves to control the flow of refrigerant through the condenser and liquid receiver in order to maintain proper head pressure under varying conditions. Head pressure control through refrigerant flow control may be done using two separate valves: a condenser pressure regulator and a receiver pressure regulator, or it may be a combined condenser pressure regulator and receiver pressure regulator in a single valve body, often called a *head pressure control valve* or *low-ambient control*, **Figure 21-57**.

Head pressure control valves will be covered in detail in Chapter 22, *Refrigerant Flow Components*. This chapter will cover head pressure control using methods that do not directly affect the flow of refrigerant.

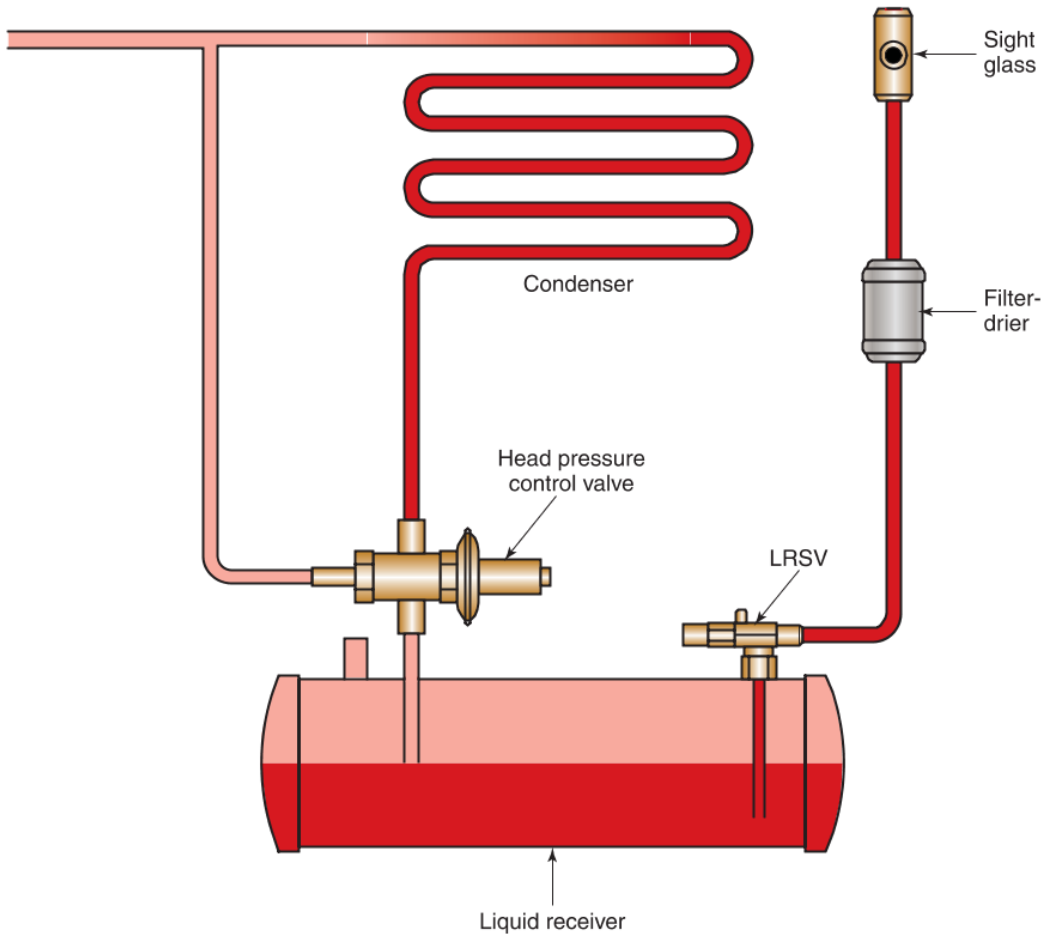

Goodheart-Willcox Publisher

Figure 21-57. Head pressure control is important in commercial refrigeration systems in low ambient conditions. Such control valves are one of several ways to maintain sufficient head pressure year-round.

Copyright Goodheart-Willcox Co., Inc.

21.3.1 Head Pressure Control—Condenser Air Louvers

Another way to raise low head pressure in low ambient temperatures is to close the condenser housing airflow louvers. A tap on the high side provides high-pressure refrigerant to one end of a pressure-sensitive device, such as a bellows. The other end of this pressure device is connected to the louvers by rod and linkages to control their movement and position. Head pressure pushes against the bellows on one end, and atmospheric pressure pushes against the bellows on the other end. As head pressure decreases, the bellows contract, which moves the rod and closes the louvers, **Figure 21-58**.

The closed louvers limit air movement, which would otherwise carry away heat expelled by the condenser. With static air, heat expelled by the condenser begins to accumulate in the condenser housing. In a constant volume, such as a condenser, a substance's temperature and pressure simultaneously rise and fall. As heat accumulates and condenser temperature increases, head pressure also increases. As head pressure increases, the bellows push the rod outward causing the linkage to open the louvers, as **Figure 21-59** shows.

The condenser fans may operate when louvers are closed or they may be shut off when the louvers near the closing point. Not all louver controls are based on the pressure differential between atmosphere and head pressure. Some controls react to ambient temperatures.

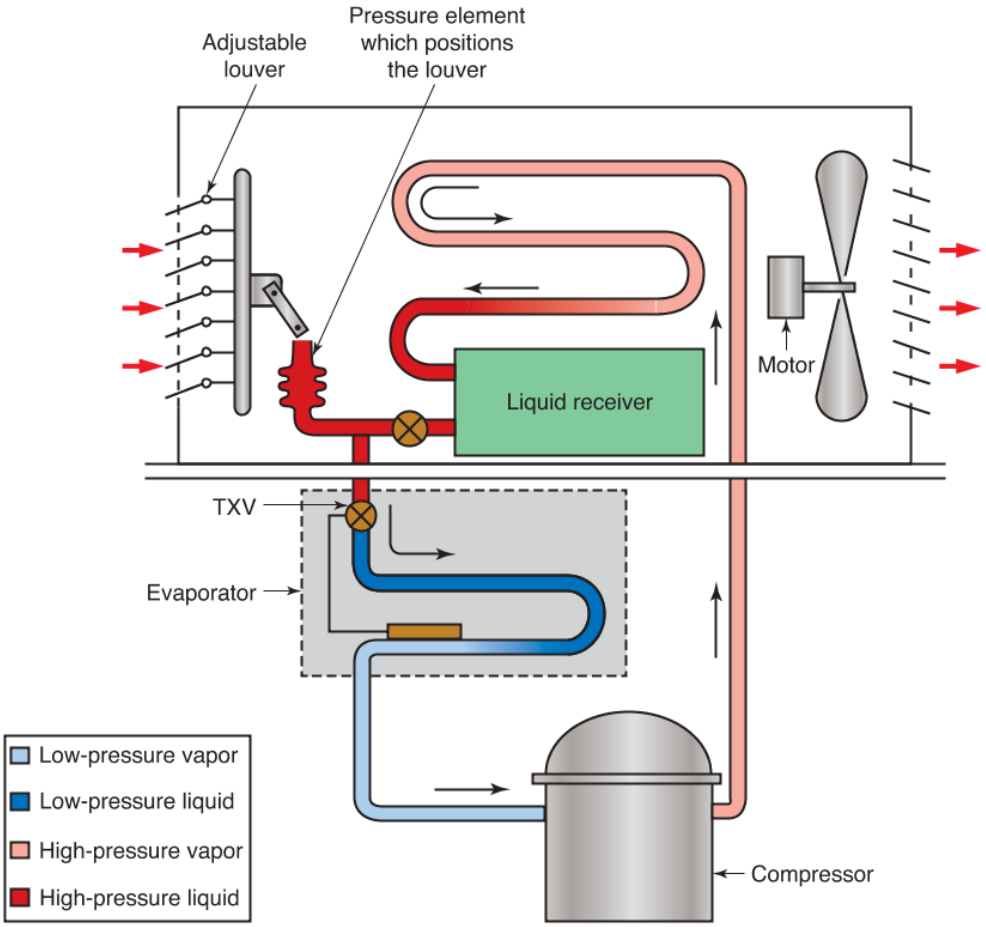

Goodheart-Willcox Publisher

Figure 21-58. The air-cooled condenser in this drawing is equipped with a pressure-operated louver. As head pressure decreases, the louver starts to close, reducing condenser airflow and allowing head pressure to build.

Copyright Goodheart-Willcox Co., Inc.

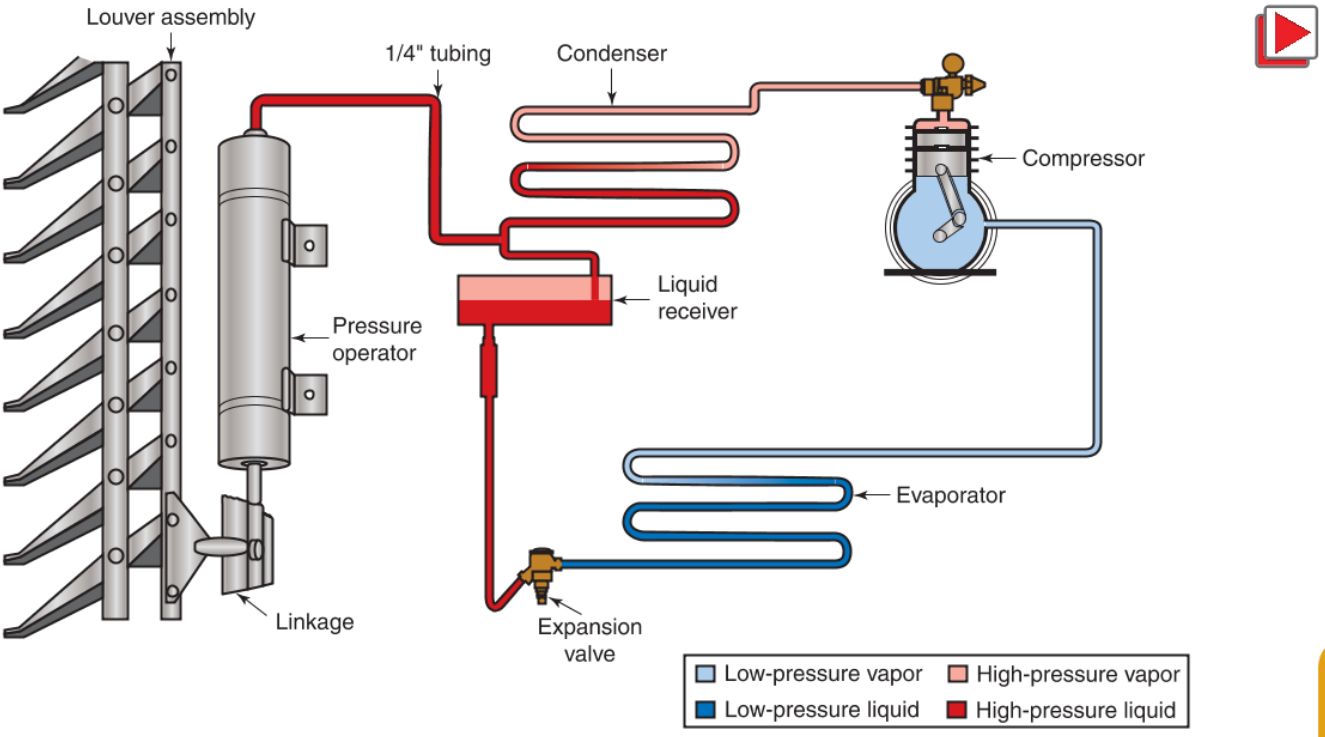

Siebe Environmental Controls, Invensys Climate Controls Americas

Figure 21-59. The positioning cylinder (pressure operator) on the left side of the drawing reacts to pressure from the condenser. An increase in pressure moves the rod outward, which operates the linkage to open the louvers.

21.3.2 Head Pressure Control—Fan Speed Control and Cycling

Outdoor, air-cooled condensers with multiple fans may cycle off individual fans or groups of fans in response to low head pressure. The lower the head pressure, the fewer the number of fans remaining in operation. As head pressure rises, more fans are cycled back into operation, **Figure 21-60**.

Other systems reduce fan speed in response to low head pressure. These may use a variable frequency drive to lower fan speed as head pressure drops. Electrically controlled speed-modulated fans are used for this purpose. This system operates with a thermistor on the condenser, **Figure 21-61**.

21.3.3 Head Pressure Control—Electric Heat

Electric heating elements are sometimes placed in or around the liquid receiver. This keeps the liquid receiver temperature warmer than the condenser cabinet temperature. If it were allowed to become too cold, the liquid receiver would act like a condenser.

21.4 Other Heat Exchangers

Evaporators and condensers are the two most prominent heat exchangers in HVACR systems. However, there are other applications for heat exchangers. These may be to increase system efficiency, protect the compressor, heat building water, or more than one of these purposes.

21.4.1 Suction Line-Liquid Line Heat Exchangers

A ***suction line-liquid line heat exchanger*** is a component that brings the liquid line and suction line in contact with each other so that the warmer liquid line transfers heat to the cooler suction line. Refrigerant vapor in the suction line and liquid refrigerant in the liquid line travel through a heat exchanger in opposite directions, **Figure 21-62**.

Although a suction line-liquid line heat exchanger simply moves heat from one refrigerant line to another, it serves more than one purpose in an HVACR system:

- It subcools liquid refrigerant in the liquid line, reducing the risk of flash gas in the liquid line and increasing system efficiency.

Copyright Goodheart-Willcox Co., Inc.

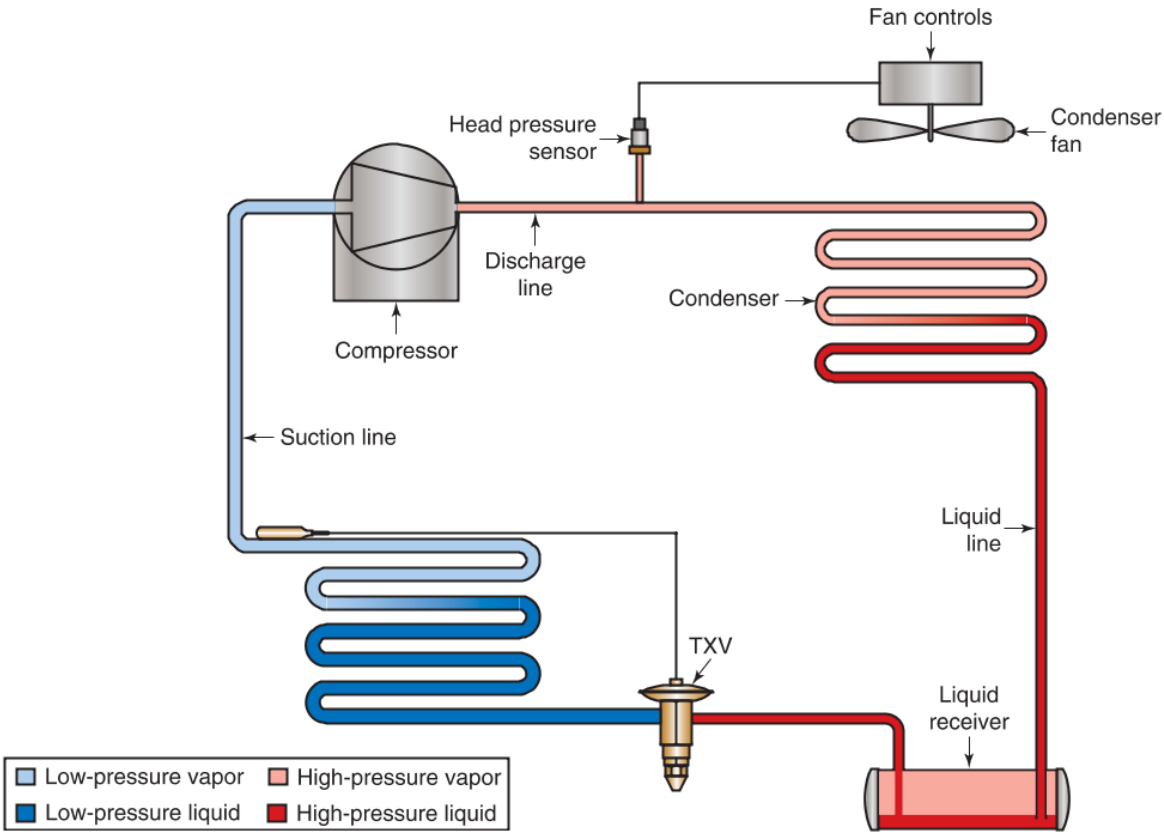

Ranco, Invensys Climate Controls Americas

Figure 21-60. This diagram shows a refrigeration system with a fan-cycling pressure control that senses head pressure.

Control Resources, Inc.

Figure 21-61. Fan speed control unit is equipped with a thermistor.

- It superheats vapor refrigerant in the suction line, preventing refrigerant in the suction line from condensing and protecting the compressor from slugging.

A suction line-liquid line heat exchanger promotes complete vaporization of refrigerant in the suction line and cooler liquid refrigerant in the liquid line. Typically, this subcools the liquid refrigerant by 10°F to 20°F (5.5°C to 11°C) at the prevailing head pressure, which allows the refrigerant to absorb more heat as it changes to a vapor in the evaporator. This additional subcooling increases a system's cooling capacity and efficiency.

If the refrigerant in the liquid line is too warm, flash gas can form in the liquid line or a more than normal amount of flash gas can form when the refrigerant enters the evaporator. Flash gas is refrigerant that vaporizes suddenly but does not absorb latent heat from the conditioned space. A limited amount of flash gas created in the evaporator can serve a useful function; however, any flash gas created in the liquid line reduces the overall effectiveness of the system. A suction line-liquid line heat exchanger allows the cool refrigerant vapor in the suction line to absorb some

Copyright Goodheart-Willcox Co., Inc.

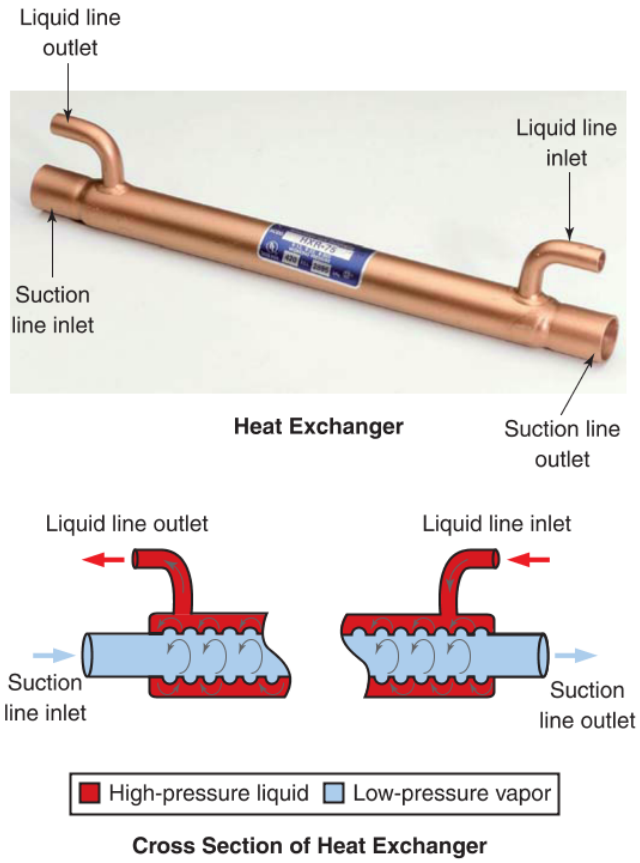

Packless Industries; Goodheart-Willcox Publisher

Figure 21-62. In a suction line-liquid line heat exchanger, refrigerant vapor flows in the opposite direction of liquid refrigerant. The design of the inner tube causes the refrigerant vapor and liquid refrigerant to swirl, improving heat transfer.

heat from liquid refrigerant in the liquid line, reducing the risk of flash gas formation in the liquid line.

Suction line-liquid line heat exchangers also help to prevent sweat backs or frost backs on the suction line. Because this device superheats the refrigerant vapor in the suction line, it counteracts the formation of frost or condensation on the suction line. The additional superheat also helps prevent the refrigerant vapor from condensing in the suction line and slugging the compressor.

21.4.2 Commercial Refrigeration Liquid Line Subcoolers

The process of subcooling reduces liquid line refrigerant temperature below its saturated temperature. The lower the temperature in the liquid line, the greater the system's heat removal capacity. This will result in a more efficient system. Mechanical subcooling is used on low-temperature refrigeration systems, such as display cases and freezers in large commercial refrigeration applications.

Mechanical subcooling is accomplished by refrigerating a portion of the liquid line of a low-temperature system in a subcooler using a high-temperature HVAC system, such as an air conditioning unit. A ***subcooler*** is a heat exchanger through which flows liquid line refrigerant of a low-temperature system in one circuit and the low-side refrigerant of a high-temperature system in another circuit. Each system's refrigerant flows through a separate but adjacent pathway where they exchange heat. A subcooler acts as the evaporator of the high-temperature system. Subcoolers are often tube-within-a-tube or plate heat exchangers.

High-temperature systems remove heat three times more efficiently than low-temperature refrigeration systems. The high-temperature air conditioning and the low-temperature freezer cases work together in a subcooler as a variation of a cascading system. The two systems increase the overall efficiency of the refrigeration process. Liquid line subcooling systems can be added to existing commercial refrigeration systems. **Figure 21-63** shows a subcooler installation diagram.

7

21.4.3 Plate Heat Exchangers

Engineers and designers are constantly improving methods of heat transfer. In many larger systems, designs have called for plate heat exchangers. A ***plate heat exchanger*** is a heat exchange device composed of a set of thin metal sheets that form two separate passageways that share a significant amount of common surface area. These plates are manufactured with different designs and patterns depending on the heat transfer needs and fluids to be circulated, **Figure 21-64**.

In HVACR, plate heat exchangers may be used in heat recovery systems, liquid line subcooling, high-side intercooling, water-cooled condensers, water-source heat pumps, cooling towers, and similar applications. Presently, these are used in more commercial systems than in small residential systems. Plate heat exchangers can be manufactured in different sizes for different heat loads, **Figure 21-65**.

Plate heat exchangers are not just used in HVACR applications. They are found in the food and beverage industry, petroleum and chemical processing, pharmaceutical production, power generation, and other industrial applications. Like all heat exchangers, plates can become fouled, depending on the circulating fluids. In some cases, the plates may be dismantled for cleaning or maintenance. Evaporators, condensers, and plate heat exchangers should be kept clean and free of anything that may inhibit free exchange of heat, **Figure 21-66**.

Copyright Goodheart-Willcox Co., Inc.

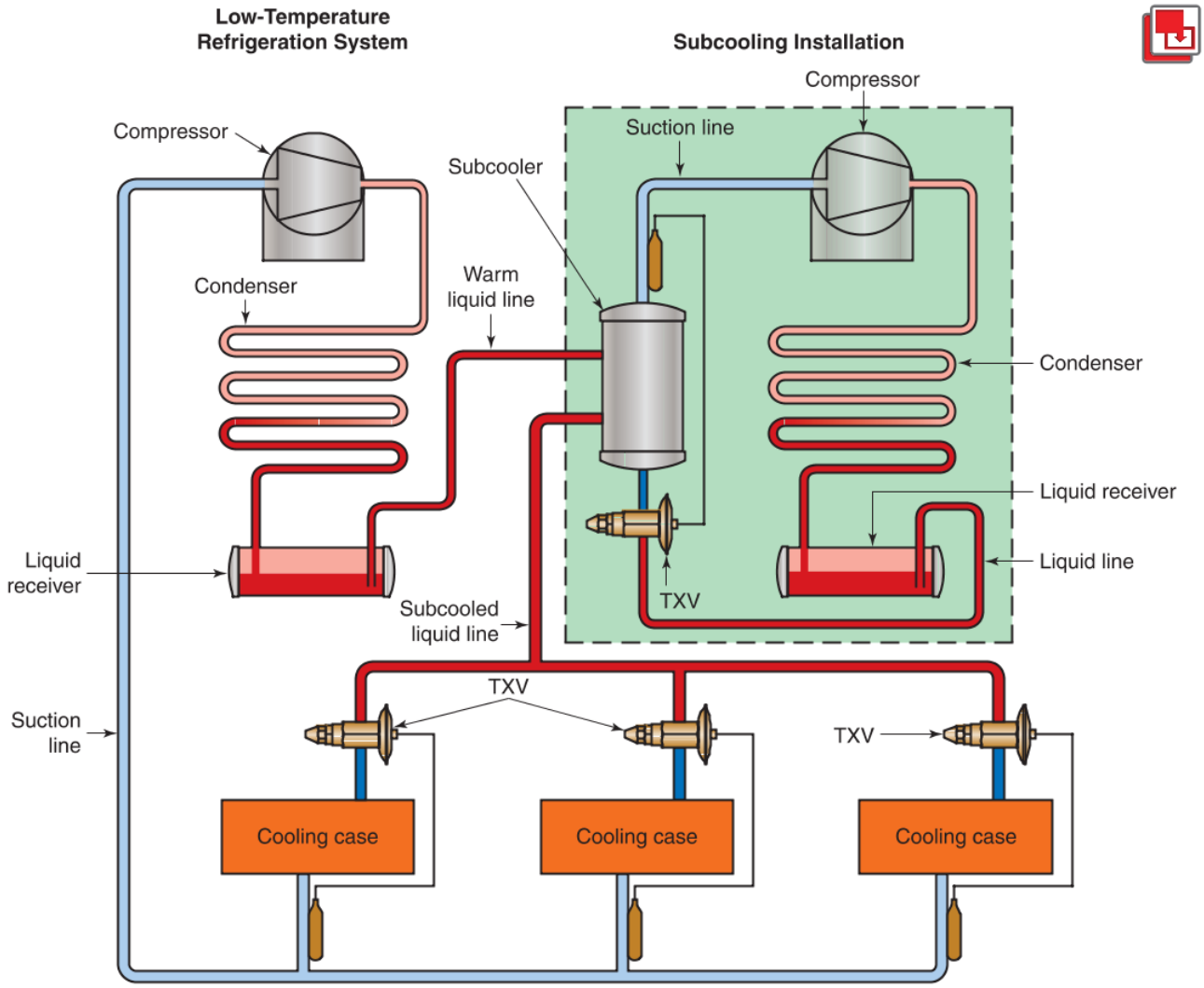

Standard Refrigeration Co.

Figure 21-63. This diagram shows a subcooling installation on a commercial refrigeration system to subcool the liquid lines leading to the three display cases.

GEA Heat Exchangers

Figure 21-64. Plate heat exchanger patterns.

Copyright Goodheart-Willcox Co., Inc.

Danfoss

Figure 21-65. Plate heat exchangers may be used to transfer heat between various fluids in numerous system applications.

A

B

GEA Heat Exchangers

Figure 21-66. Plate heat exchanger maintenance. A—Cleaning the plates. B—Hanging plates for assembly.

21.4.4 Heat Recovery Systems

A ***heat recovery system*** is a collection of devices used to reclaim waste heat for a building's reuse as climate control heating or water heating. These devices typically include extra tubing, solenoid valves, and heat exchangers or condensers. These devices are often used in supermarkets, restaurants, and other commercial applications. A heat recovery system may also be referred to as a *heat reclaim system* or a *heat reclamation system*.

For heat recovery systems used for climate control heating, the high-side refrigerant is routed to a condenser within the conditioned air ducts. There the refrigerant expels heat to warm circulating building air. Though a heat recovery system can be used for comfort heating, it is more often applied to warming or preheating a building's hot water. This may be done through hot water reclaim tanks or plate heat exchangers.

A ***hot water reclaim tank*** is a cylinder filled with water that absorbs heat from the hot-gas refrigerant flowing through a refrigeration system's discharge line. Hot water reclaim tanks are often used in commercial applications as an energy efficient solution to heating a building's water, **Figure 21-67**.

Hot-gas refrigerant in the discharge line is redirected by a three-way solenoid valve to a reclaim condenser where heat is expelled into a useful medium. High-side piping and condensers can be arranged in series or in parallel. When a heat recovery system is arranged in series, all of the discharge refrigerant flows through the reclaim condenser and then through the normal condenser. In this series arrangement, the reclaim condenser only desuperheats (removes some

Copyright Goodheart-Willcox Co., Inc.

BouMatic

Figure 21-67. Hot-gas refrigerant from a compressor's discharge line is piped through a hot water reclaim tank before going to a condenser.

sensible heat from) the refrigerant. It does not condense the refrigerant. In a series arrangement, it is only when the refrigerant flows through the normal condenser that it condenses and subcools, **Figure 21-68**.

When a heat recovery system is arranged in parallel, the three-way solenoid valve directs the hot-gas refrigerant into either the normal condenser or the reclaim condenser. During normal operation, refrigerant flows only through the normal condenser and expels the waste heat, **Figure 21-69A**.

For heat reclaim operation in a parallel arrangement, the three-way solenoid valve diverts high-side refrigerant into the reclaim condenser where the heat is recovered and used for comfort climate heating or water heating. In this parallel arrangement, the reclaim condenser must be able to displace the entire heat load of the system to desuperheat, condense, and subcool high-side refrigerant, **Figure 21-69B**.

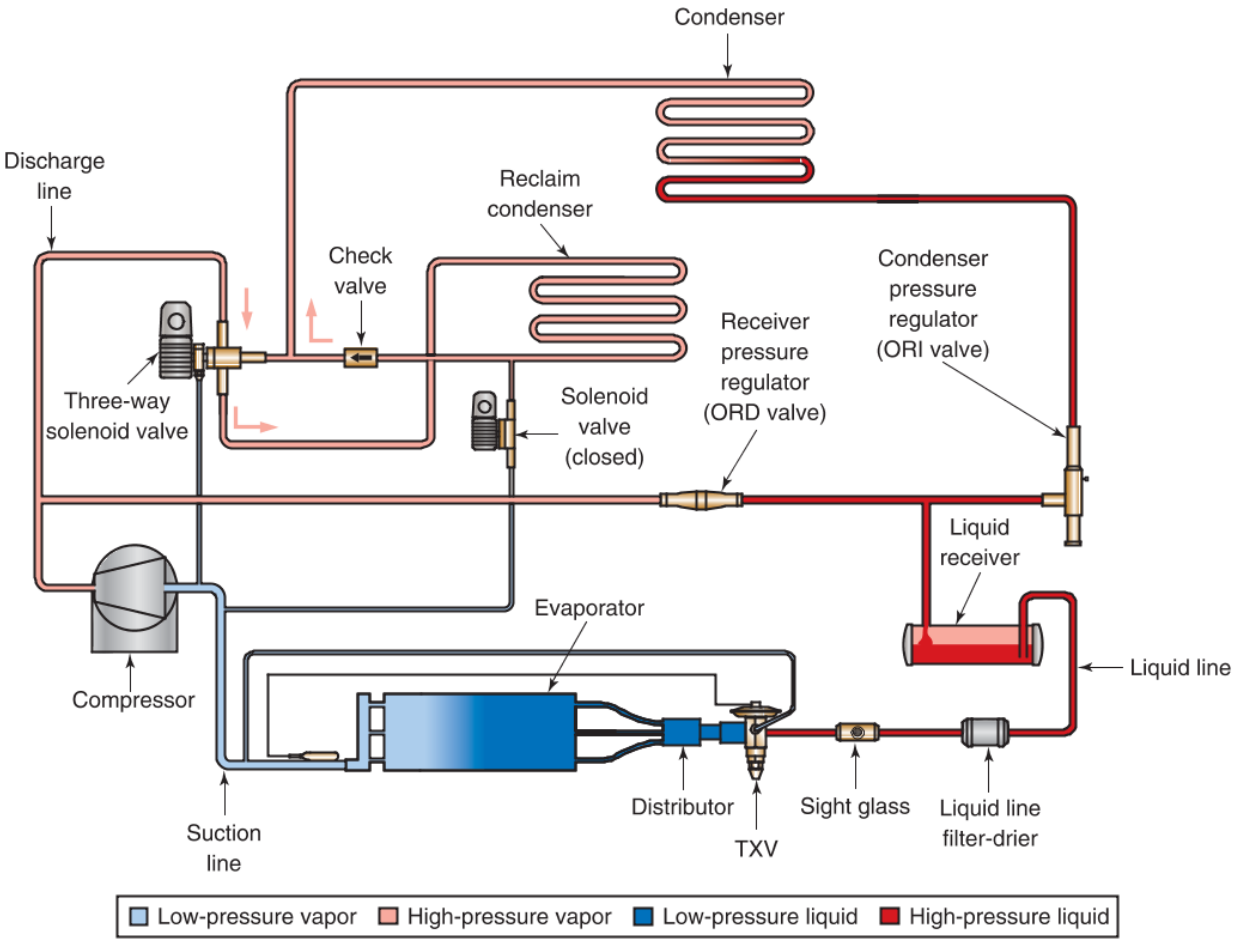

Courtesy of Sporlan Division - Parker Hannifin Corporation

Figure 21-68. In a series arranged heat recovery system, high-side refrigerant first flows through the reclaim condenser to desuperheat and then through the normal condenser to condense and subcool.

Copyright Goodheart-Willcox Co., Inc.

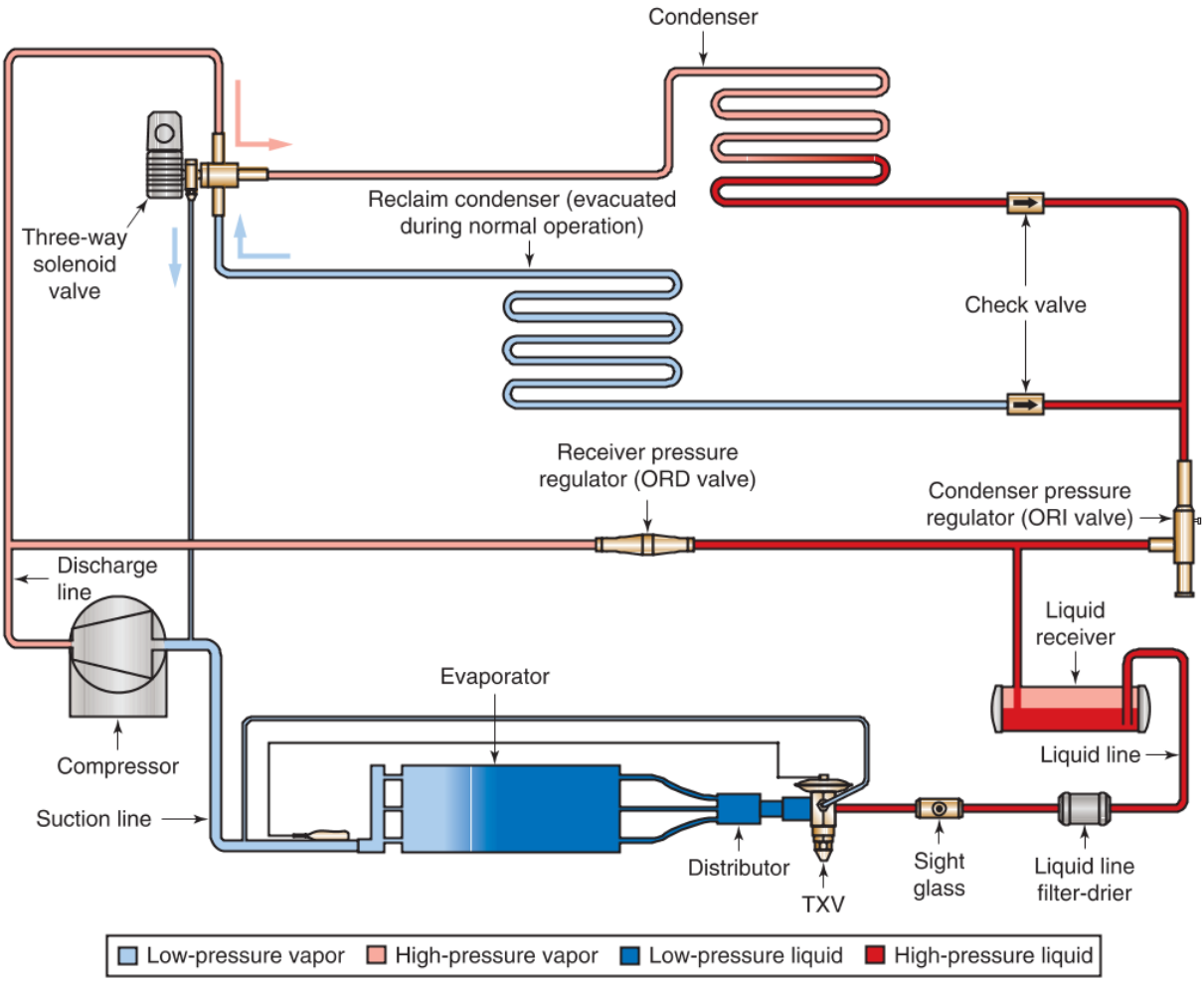

A

(Continued)

Courtesy of Sporlan Division - Parker Hannifin Corporation

Figure 21-69. In a parallel arranged heat recovery system, high-side refrigerant flows through only one of the two condensers: normal or reclaim. A—Normal operation. B—Heat recovery operation.

Copyright Goodheart-Willcox Co., Inc.

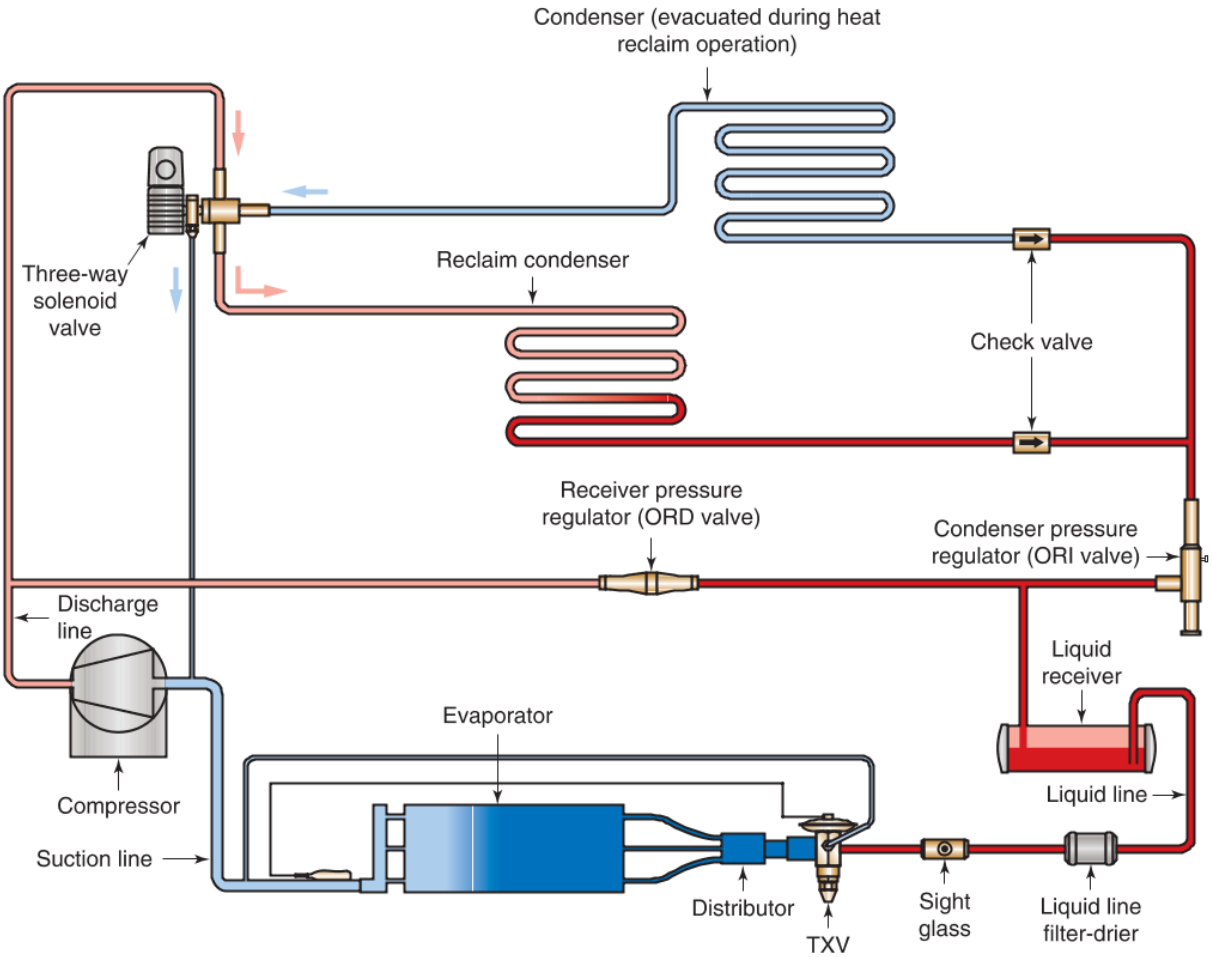

B

Courtesy of Sporlan Division - Parker Hannifin Corporation

Figure 21-69. Continued

Copyright Goodheart-Willcox Co., Inc.

Chapter Review

Summary

- Air-cooling evaporators are designed to cool the air circulating through a conditioned space. These can be either natural-draft or forced-draft.
- Liquid-cooling evaporators are designed to cool a liquid. Most liquid-cooling evaporators are immersed evaporators, which consist of evaporator coils immersed in a basin filled with a liquid.
- There are three main types of air-cooling evaporator construction: fin-and-tube, plate, and microchannel. Fin-and-tube is the most widely used.
- Plate evaporators consist of sheets of metal welded together to form passages for refrigerant flow.
- Microchannel evaporators consist of fin arrangements attached to tubes with numerous refrigerant passages that are less than 1 mm in diameter.
- For hot-gas defrost, hot-gas refrigerant is pumped through tubing that runs directly from the compressor discharge line to the evaporator inlet.
- For nonfreezing solution defrost, a heated fluid is circulated in tubing near and around the evaporator to melt any ice and frost. For water defrost, tap water is run over the evaporator when the compressor is cycled off.
- Electric heat defrost melts frost using electric heating elements in and around the evaporator. Off-cycle defrost circulates air from the conditioned space over the evaporator coil during the Off cycle.
- Pump-down defrost removes refrigerant from the evaporator to expedite the defrosting process.
- Condensers can be air-cooled, water-cooled, or evaporative.
- The three main designs of water-cooled condensers are shell-and-tube, shell-and-coil, and tube-within-a tube.
- In an evaporative condenser, fans produce an evaporative cooling effect by blowing across refrigerant-filled tubes that are sprayed with water droplets.
- Suction line-liquid line heat exchangers bring the liquid line and suction line in contact with each other so that the warmer liquid line can transfer heat to the cooler suction line.
- Plate heat exchangers are composed of a set of thin metal sheets that form two separate passageways that share a significant amount of common surface area.
- A heat recovery system reclaims heat from hot refrigerant for a building's reuse as climate control heating or water heating.

Review Questions

Answer the following questions using the information in this chapter.

1. Gravitational circulation of air is used by _____ evaporators.
   A. forced-draft
   B. immersed
   C. microchannel
   D. natural-draft
2. A small, plain, tube evaporator submerged and mounted inside a container filled with a liquid that provides good heat transfer is a(n) _____ evaporator.
   A. forced-draft
   B. immersed
   C. microchannel
   D. natural-draft
3. An evaporator fabricated from two metal sheets, welded together, that form a series of passages through which refrigerant flows describes a(n) _____ evaporator.
   A. fin-and-tube
   B. immersed
   C. microchannel
   D. plate
4. An evaporator with refrigerant passages that are less than 1 mm in diameter is a(n) _____ evaporator.
   A. fin-and-tube
   B. immersed
   C. microchannel
   D. plate
5. The three variables by which defrost timers operate include all of the following, *except* _____.
   A. humidity
   B. pressure
   C. temperature
   D. time

Copyright Goodheart-Willcox Co., Inc.

6. Excess moisture produced by a defrosting evaporator may be removed from a conditioned space or cabinet using a(n) _____ when the available drain is elevated or at a remote location.
   A. set of baffles
   B. condensate pump
   C. desiccant
   D. pump-down solenoid
7. Evaporator defrosting that involves pumping refrigerant directly from the compressor discharge line into the evaporator tubing describes a(n) _____ defrost.
   A. hot-gas
   B. nonfreezing solution
   C. pump-down
   D. off-cycle
8. Evaporator defrosting that involves circulating a heated solution in tubing near and around the evaporator during the Off cycle describes a(n) _____ defrost.
   A. hot-gas
   B. nonfreezing solution
   C. pump-down
   D. water
9. Evaporator defrosting that involves running tap water over the evaporator when the refrigeration system is off describes a(n) _____ defrost.
   A. hot-gas
   B. electric
   C. nonfreezing solution
   D. water
10. An evaporator defrosting system that circulates air from the conditioned space over the evaporator during the Off cycle is a(n) _____ defrost.
   A. hot-gas
   B. nonfreezing solution
   C. pump-down
   D. off-cycle
11. For _____ defrost, refrigerant is removed from the evaporator in order to increase heat transfer to the frost buildup.
   A. hot-gas
   B. nonfreezing solution
   C. pump-down
   D. electric
12. Water-cooled condensers are built in all the following designs, *except* _____.
   A. shell-and-tube
   B. shell-and-coil
   C. tube-within-a-tube
   D. wet deck
13. A condenser that uses sprayed water droplets and drafts from fans to produce an evaporative cooling effect on its coils that flow with hot refrigerant vapor is a(n) _____ condenser.
   A. air-cooled
   B. evaporative
   C. microchannel
   D. water-cooled
14. The purpose of grooves, ridges, and pattern surfaces on the inside surface of condenser tubing is to _____.
   A. increase heat transfer
   B. look cool
   C. prevent tubing corrosion
   D. reduce heat transfer
15. The primary need for head pressure control in commercial refrigeration systems is due to _____.
   A. high winds
   B. low ambient temperature
   C. rain
   D. refrigerant overcharge
16. With condenser louver head pressure controls, as head pressure rises, the louvers _____.
   A. begin to close
   B. begin to open
   C. remain stationary
   D. None of the above.
17. When using fan speed control and cycling for head pressure control, a drop in head pressure will cause _____.
   A. all the fans to cycle on
   B. fan speed to increase
   C. fans to slow down or cycle off
   D. Both A and B.
18. A suction line-liquid line heat exchanger performs which of the following functions?
   A. It increases the formation of flash gas in the liquid line.
   B. It subcools refrigerant in the suction line.
   C. It increases a system's efficiency.
   D. It prevents refrigerant in the suction line from evaporating.

Copyright Goodheart-Willcox Co., Inc.

19. A heat exchanger through which flows the liquid line refrigerant of a low-temperature refrigeration system and the low-side refrigerant of a high-temperature system is called a(n) _____.
    A. overchiller
    B. superheater
    C. subcooler
    D. undercooler
20. A heat recovery system uses the heat from a system's _____ line.
    A. discharge
    B. liquid
    C. suction
    D. water

Copyright Goodheart-Willcox Co., Inc.

CHAPTER 22 Refrigerant Flow Components

Chapter Outline

22.1 Refrigerant Loop Components
22.2 Storage and Filtration Components
- 22.2.1 Suction Line Filter-Driers
- 22.2.2 Liquid Receivers
- 22.2.3 Liquid Line Filter-Driers
- 22.2.4 Sight Glasses

22.3 Refrigerant Flow Valves
- 22.3.1 Refrigerant Line Valves
- 22.3.2 Shutoff Valves
- 22.3.3 Service Valves
- 22.3.4 Check Valves
- 22.3.5 Solenoid Valves
- 22.3.6 Hot-Gas Defrost Valves
- 22.3.7 Hot-Gas Bypass Valves
- 22.3.8 Liquid Injection Valves

22.4 Pressure-Regulating Valves
- 22.4.1 Crankcase Pressure Regulators (CPRs)
- 22.4.2 Evaporator Pressure Regulators (EPRs)
- 22.4.3 Relief Valves

22.5 Head Pressure Control Valves
- 22.5.1 Head Pressure Control—Pressure-Regulating Valves
- 22.5.2 Head Pressure Control—Condenser Splitting

Learning Objectives

Information in this chapter will enable you to:

- Explain the two primary functions of refrigerant loop components.
- Describe the purpose and uses of liquid receivers.
- Differentiate between the distinct duties of filters and driers.
- Explain the function of suction line and liquid line filter-driers
- Explain how sight glasses can be used to indicate the amount of moisture in a refrigeration system.
- Describe the operation and use of refrigerant line valves, shutoff valves, service valves, check valves, solenoid valves, hot-gas defrost valves, hot-gas bypass valves, and liquid injection valves.
- Explain the operation and purpose of crankcase pressure regulators (CPRs).
- Compare the operation of the different types of evaporator pressure regulators (EPRs).
- Compare and contrast the different types of relief valves available.
- Describe the different head pressure control valves and condenser arrangements and explain how they operate to maintain head pressure.

Technical Terms

check valve
condenser pressure regulator
condenser splitting
evaporator pressure regulator (EPR)
electric evaporator pressure regulator (EEPR)
hot-gas bypass valve
hot-gas defrost valve
liquid injection valve
liquid line manifold
low-ambient control (LAC)
manifold valve
metering evaporator pressure regulator
moisture indicator
open on rise of differential pressure (ORD) valve
open on rise of inlet pressure (ORI) valve
pressure-regulating valve
receiver pressure regulator
refrigerant line valve
refrigerant migration
relief valve
riser
riser valve
rupture disc
shutoff valve
sight glass
snap-action evaporator pressure regulator
solenoid valve
split condenser valve
spring-loaded relief valve
starved evaporator
summer condenser
summer/winter condenser

Review of Key Concepts

Reviewing these concepts from earlier chapters will help you understand new concepts presented in this chapter:

- Maintaining proper pressures, clean oil, and moisture-free refrigerant in a system is critical for long-term, trouble-free system operation. (Chapter 19)
- According to Gay-Lussac's law, in a fixed volume, pressure and temperature exhibit a direct relationship. As pressure rises, temperature rises. As temperature drops, pressure drops. (Chapter 5)
- A pump-down is the relocation of a system's entire refrigerant charge into the liquid receiver, which allows a technician to repair leaks and replace components without having to recover a system's refrigerant charge. (Chapter 11)
- A thermostatic expansion valve (TXV) is a liquid metering device that operates based on superheat. (Chapter 20)
- An electronic expansion valve (EEV) is a type of metering device using a needle valve that is most often positioned using a stepper motor. The valve responds to signals from an electronic controller that may be using measured temperature, pressure, or both. (Chapter 20)
- When a motor is subjected to a heavy load, such as high low-side pressure entering a compressor, a higher current is drawn by the power circuit. Heavy loads causing high current draw can cause an electric motor to overload. (Chapter 13)
- Air-cooled condensers that operate in very low ambient temperature must often use head pressure controls to maintain high enough head pressure for proper system operation. This is most often necessary for commercial refrigeration systems that operate year-round in a climate with a cold season. (Chapter 21)

Introduction

In addition to metering devices, many different types of mechanical and electromechanical devices are used to regulate refrigerant flow, pressure, quality, and storage. They ensure that the correct amount of clean oil and refrigerant are circulated in the system for safe operation. In addition to the many automatic valves used throughout a system, manual valves also allow access for service, repair, and maintenance.

Video

- Low-Side Pressure Regulators

22.1 Refrigerant Loop Components

The basic refrigeration loop consists of the primary four components: compressor, condenser, metering device, and evaporator. These are all the refrigerant components necessary for a basic refrigeration system. As the application of HVACR systems grows to meet more specific and demanding needs, additional components are added to the refrigerant loop. This could mean additional evaporators, larger refrigerant capacity storage systems, extreme ambient operating conditions, and automatic defrost controls introduce new devices into the refrigerant loop. As systems get larger and serve commercial and industrial functions, different components are added.

However, behind the many different refrigerant flow components in the most advanced refrigeration and air conditioning systems is the basic refrigerant loop. Refrigerant loop components have two primary functions:

- Control refrigerant flow.
- Maintain proper refrigerant quantity and quality in the system.

Examples of refrigerant flow control devices are solenoid valves, check valves, pressure-regulating valves, and any other mechanical or electromechanical valve regulating refrigerant flow. Devices used to maintain proper refrigerant quantity and quality are refrigerant storage and cleanliness devices, such as liquid receivers, filter-driers, and sight glasses. Their function is to ensure that the proper amount of clean, dry refrigerant and oil are circulated throughout the refrigerant loop at all times.

22.2 Storage and Filtration Components

The refrigerant loop contains several components used to filter and store the circulating fluid. These components are found on both low and high sides.

22.2.1 Suction Line Filter-Driers

Filter-driers are often mounted in the suction line to prevent foreign particles and moisture from entering the compressor. Replacement of these filter-driers is necessary following a compressor burnout. They may also be installed temporarily following a compressor burnout and removed when the system has been cleaned.

Filter-driers are composed of two different devices, each with a different purpose. The main task of a drier is to adsorb moisture and other contaminants that could mix to create acids. The main task of a filter is to catch foreign materials circulating in the refrigerant. Together these two devices stop particles over 5 microns in size, as well as acids, sludge, and moisture from entering the compressor.

A suction line filter-drier should be replaced if it produces a measureable pressure drop. Because many filter-driers have access ports at both inlet and outlet, it is possible to compare pressure readings with a gauge, **Figure 22-1**.

Caution

Suction Line Low-Pressure

Pressure drops from a filter or other suction line device can hinder the return of oil to the compressor. Be sure suction line filter-driers and other devices are not undersized. Undersized filter-driers reduce system efficiency.

Figure 22-2 shows a filter body for a commercial refrigeration system. It has a bolted assembly to permit replacement of the filter element. The service connection allows the technician to check the pressure drop across the filter-drier. Compare pressure readings upstream and downstream of the filter-drier. There should not be a measureable pressure difference while the system is running. If there is a measureable pressure drop, replace the filter element.

Pro Tip

Filter for a New Compressor

The replacement of all system filters is required during a compressor replacement. Always be sure to replace the suction line and liquid line filter-driers following a compressor burnout or replacement. This will ensure that no contaminants are left in the system.

Danfoss

Figure 22-1. Having access valves mounted on suction line filter-driers allows a technician to easily check for pressure drops.

Copyright Goodheart-Willcox Co., Inc.

Emerson Climate Technologies

Figure 22-2. Suction line filter-drier with a bolted flange that permits easy replacement of the filter element. The service connection equipped on top allows for pressure readings to tell when the filter element should be replaced.

The element in a drier that collects and holds moisture is the *desiccant*. A desiccant's capacity to absorb and hold moisture is temperature-dependent. The colder the desiccant, the more moisture it can hold. Thus, a filter-drier should be installed in a relatively cool location to be most effective.

Caution

Brazing Near a Drier

It is important to remember that a drier's capacity is temperature-dependent. Do not remove a filter-drier using a torch. Heat from the torch would drive moisture out of the desiccant and into the system. This defeats the purpose of having a drier and could damage the system. It is better to use tubing cutters to remove filter-driers from systems, rather than a torch.

A suction line filter-drier removes water, dirt, and acid. Its primary purpose is to protect the compressor from potential damage. Suction line refrigerant velocity is approximately six times the velocity in the liquid line. The greater the refrigerant velocity, the larger the filter-drier required to prevent pressure drop. Therefore, suction line filter-driers are larger than those in the liquid line.

Caution

Alcohol Additives and Filter-Driers

Alcohol additives should not be added to a moisture-ridden system. Modern desiccants can adsorb these additives even more readily than they adsorb moisture. If alcohol is added, the desiccant may release moisture into the system. Desiccant that has already captured moisture could release some of that moisture and replace it with the alcohol additive, further reducing the effectiveness of the desiccant.

22.2.2 Liquid Receivers

A *liquid receiver* is a refrigerant storage tank connected between the outlet of a condenser and a liquid line. On large commercial systems, the liquid receiver provides reserve liquid refrigerant when needed and stores the rest when not needed. The outlet to the liquid line is submerged in the liquid refrigerant. This ensures that the liquid line will only circulate subcooled liquid refrigerant, not vapor refrigerant. A liquid receiver must provide enough storage for a system's entire refrigerant charge during automatic and manual pump-down (for defrost purposes, when some of the evaporators are not in use, and system service procedures), **Figure 22-3**.

When a commercial refrigeration system cycles into defrost or the cooling thermostat is satisfied, the liquid line solenoid valve de-energizes and closes. Even after this happens, the compressor stays in operation and pumps down the system until the pressure in

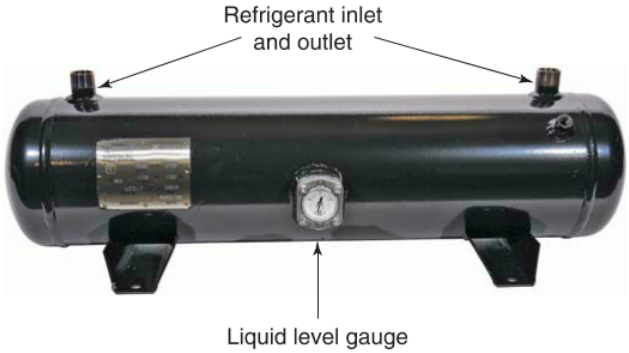

Westermeyer Industries, Inc.

Figure 22-3. Liquid receivers are often engineered as vertical or horizontal cylinders. This horizontal cylinder also has a liquid level gauge.

Copyright Goodheart-Willcox Co., Inc.

the evaporator drops to a low pressure (usually around 2 psi). Then a low-pressure control shuts off the compressor. The majority of the refrigerant is removed from the evaporator coil and the section of the liquid line beyond the liquid line solenoid valve. This refrigerant has been pumped down into the condenser and liquid receiver. This prevents refrigerant from flooding the compressor from the evaporator during the Off cycle. This type of system is mandatory if the compressor is located outdoors where it could be in a colder environment than the evaporator coil.

Some systems that have an outdoor air-cooled condenser need room in the liquid receiver for extra refrigerant. Without extra room, liquid refrigerant partly fills the condenser when head pressure is too low. Without high enough head pressure, this liquid will not move through the condenser.

22.2.3 Liquid Line Filter-Driers

The efficient operation of a commercial system depends greatly on the internal cleanliness of the unit. Only clean, dry refrigerant and clean, dry oil should circulate in the system. All impurities, such as dirt and water, must be removed. Contaminants must be trapped in some part of the system where they cannot do harm. Devices used for removing moisture and devices used for removing contaminants may be in separate cylinders; however, they are often built into a single cylinder (called a filter-drier) that filters and adsorbs, **Figure 22-4**.

Adsorption is the ability to collect and retain gas or vapor substances on the surface of a solid or liquid in a condensed layer through physical attraction and capillary action. Enough drying material must be used for both the high and low moisture ranges.

Emerson Climate Technologies

Figure 22-4. Clear canister liquid line filter-drier shows that it uses compacted beads as a desiccant.

Filter-driers are usually installed in the liquid line. Disposable filter-driers are used in systems 20 tons and less. Systems over 20 tons use canister style filter-driers with replaceable cores. Sizing of a drier is based upon the capacity rating of a system. Refer to manufacturer recommendations for sizing. If correctly sized, a filter-drier can keep the refrigerant both clean and dry. A filter-drier should be replaced any time the system is opened for service. For large systems, it is recommended that the filter-drier be replaced yearly or when opened for service.

Cleaning a refrigeration system involves four basic tasks:

- Removing moisture.
- Removing acid.
- Filtering out circulating solids.
- Measuring when the drying job is completed.

Filter-driers perform the first three tasks. A moisture indicator is required for the fourth. Filter-driers should be left in a system permanently since oil loses its moisture slowly. Also, insulation in hermetic compressors and in small crevices may release moisture for long periods. A drier is like a sponge, absorbing moisture from the refrigerant. However, it can become saturated if the drier is sized too small. This will leave the refrigerant with a high level of moisture that can become problematic. A moisture indicator is the only sure means of recognizing a high-moisture condition. These will be covered later in this chapter.

All filter-driers use screens or strainers to trap solids in the refrigerant. There are several types of screens or strainers. They are usually made of bronze, brass, stainless steel, or Monel wire. They should be 100 to 120 mesh. That is, there should be 100 openings along a 1″ rule length (10,000 holes per square inch). Popular screens are 100 by 90, 100 by 100, 120 by 108, and 120 by 120. The wire is usually .004″ to .005″ diameter. In this size wire, the openings are about .005″ square.

Filter materials vary and may include felt, wool batt, and processed coarse cotton yarn wound in a diamond pattern over a metal frame. Some filters make use of powdered metal pressure castings.

A conventional straight-through filter-drier is a cylinder made of brass, copper, or steel. The drier is filled with a desiccant chemical, such as activated alumina, silica gel, or zeolite. These chemicals can adsorb 12% to 16% of their weight in water. Both ends of a filter-drier's cylinder usually contain filter elements. The end caps are fitted with either flare or soldered connections.

Refrigerant with safe amounts of moisture avoids many problems in the system. Experience shows that

Copyright Goodheart-Willcox Co., Inc.

corrosion, oil breakdown, and motor burnouts are almost eliminated if filter-drier manufacturer guidelines are followed. Indicators of when a filter needs to be replaced include:

- A moisture indicator shows high moisture content.
- A pressure drop across the filter (as indicated by bubbles in the sight glass or a temperature drop as measured across the filter).
- A main component of the system, such as the compressor, has been replaced.
- The refrigerant circuit is opened, such as when an expansion valve is replaced.

Caution

New Filter-Driers

A technician should never reuse a used filter-drier. A used filter-drier will release moisture into the circulating refrigerant.

One design of a liquid line filter-drier allows the casing to stay in the liquid line. Only the drier cartridge needs to be changed, leaving the tubing and the cylinder assembled in place in the liquid line. **Figure 22-5** shows a replacement drier core and take-apart filter-driers.

22.2.4 Sight Glasses

A ***sight glass*** is a small viewport installed in a refrigerant line. It allows an HVACR technician to visually inspect the circulating fluids (refrigerant or oil) in a system. A sight glass is usually installed in a commercial refrigeration system's liquid line. In some cases, if a system is low on refrigerant, bubbles can be seen through the sight glass.

Pro Tip

Sight Glass Bubbles

Bubbles in a sight glass do not always indicate a shortage of refrigerant. When a system starts or stops, a sight glass may show a few bubbles. These are normal equalizing actions and do not indicate a shortage of refrigerant. Bubbles may also appear if the compressor is partially unloaded or if there is a restriction in the line ahead of the sight glass, such as a partially clogged filter-drier.

Most sight glasses have long extensions that allow the connections to be brazed without damage to the sight glass. Some liquid line filter-driers have a sight glass built into their outlets. Although sight glass connections are typically limited to diameters under 2 1/2″, they can still be used in systems that have a

A

B

C

Courtesy of Sporlan Division - Parker Hannifin Corporation; Emerson Climate Technologies; Danfoss

Figure 22-5. In some commercial applications, more than one replacement drier core is used in large take-apart filter-driers. A—Cutaway showing two filters in a single assembly. B—Replacement drier core. C—Take-apart filter-driers have a removable cover with a port for installing an access valve near the inlet.

Copyright Goodheart-Willcox Co., Inc.

liquid line with a larger diameter. This is done by installing smaller-diameter tubing and a sight glass parallel to the liquid line, as shown in **Figure 22-6**. If there are bubbles in the liquid line, some of them will be diverted through the smaller tubing and sight glass.

A ***moisture indicator*** is a sight glass with a color-changing element that is used to indicate a system's moisture content. The color-changing element changes color based on the amount of moisture in the refrigerant. Some types of moisture indicators undergo a single color change when the moisture in the refrigerant exceeds a maximum limit. Another type of moisture indicator changes color progressively based on the moisture content of the refrigerant. See **Figure 22-7**.

Pro Tip

Oil and Moisture Indicators

Circulating refrigerant oil can turn a moisture indicator tan. Flushing the indicator with clear refrigerant will remove the color. However, if the indicator continues to turn tan, the system has too much oil.

While most moisture indicators are the in-line style that are installed as part of the main liquid line, they may also be socket types attached to liquid receivers or other pressurized vessels. Moisture indicators are often installed just after the filter-drier in the liquid line, **Figure 22-8**.

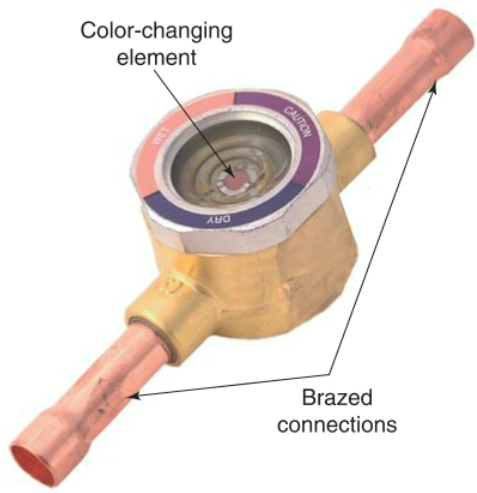

Emerson Climate Technologies

Figure 22-7. A moisture indicator that changes color progressively from blue, to purple, to pink as the moisture content of the refrigerant increases.

Caution

Color Codes

Moisture indicators made by different manufacturers may have varying color codes for indicating moisture in a system. Be certain to check the manufacturer's specifications. With some moisture indicators, the words "wet" or "dry" appear when the chemical in the indicator changes color.

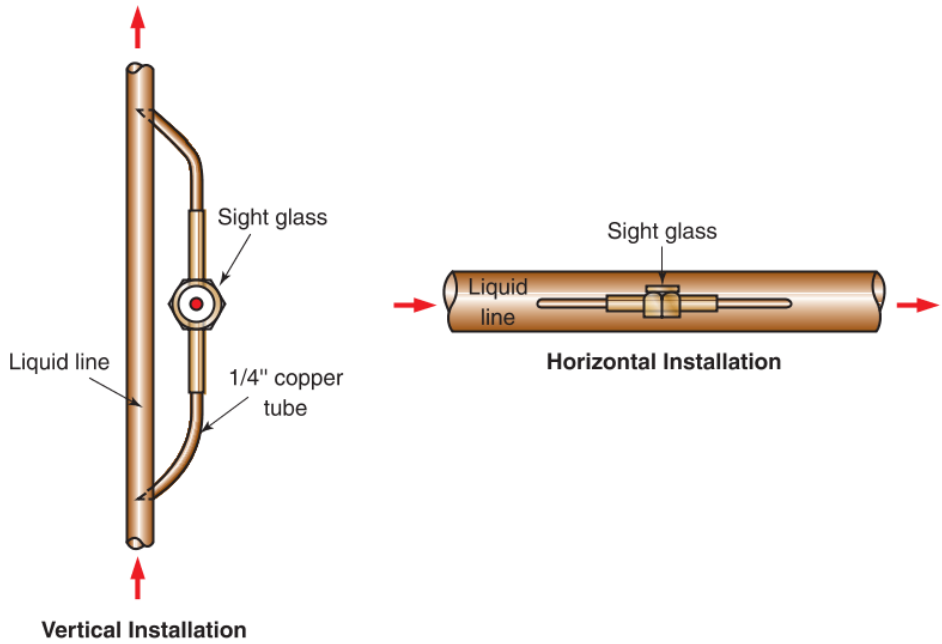

Goodheart-Willcox Publisher

Figure 22-6. A sight glass installed in smaller tubing that is parallel to the larger liquid line. Connections are usually brazed.

Copyright Goodheart-Willcox Co., Inc.

A

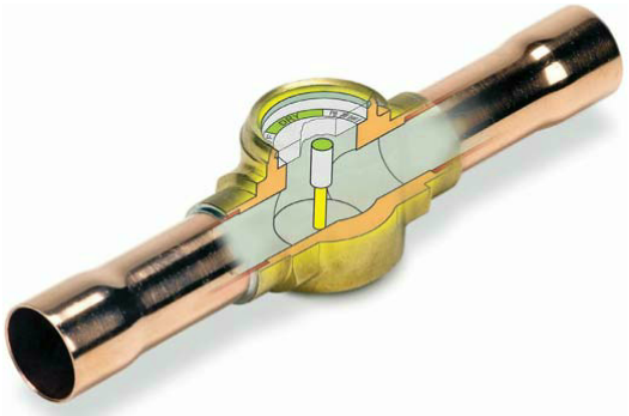

B

Danfoss

Figure 22-8. A—Moisture indicators are often available with flare or brazed connections. B—In-line moisture indicator cutaway.

Pro Tip

Temperature and Moisture Indicators

The higher the liquid refrigerant temperature, the higher the moisture content needed to produce a color change in a moisture indicator. An indicator, if hot, can show a "dry" condition even though the system has too much moisture. For accurate readings, the liquid line should be as near 75°F (24°C) as possible, **Figure 22-9**.

22.3 Refrigerant Flow Valves

Refrigerant flow valves are used to regulate the flow of refrigerant. They can stop the flow, change the direction, or control the volume of refrigerant in sections of the refrigerant loop. Valves are used at other locations in the system to regulate the flow of refrigerant for other purposes. These valves are used for such tasks as opening and closing bypass lines, isolating sections of the system for service, and controlling the refrigerant flow to multiple evaporators.

Moisture Indicator Color Code

Refrigerant	Blue—Very Dry (ppm H_2O)			Pink—Wet (ppm H_2O)		
	75°F	100°F	125°F	75°F	100°F	125°F
R-22	25	35	50	145	205	290
R-134a	20	35	60	130	160	190
R-404A	15	25	45	120	150	180
R-407C	26	40	64	150	230	370
R-410A	30	55	75	165	290	420
R-502	2.6	5	8	50	90	150
R-507A	15	25	45	120	150	180

Goodheart-Willcox Publisher

Figure 22-9. Table showing the effect of temperature on moisture indicators. As the temperature increases, the amount of moisture can increase while the indicator still shows a "dry" condition.

Although there are many different types of valves used in refrigeration systems, they can be categorized into a relatively small number of classifications based on their function and the ways in which they operate. See **Figure 22-10**.

Valve Types and Their Functions

Valve Type	Position 1	Position 2
Shutoff (two-way)	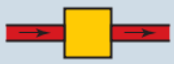	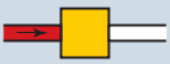
Bypass (three-way)	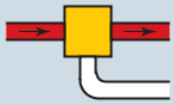	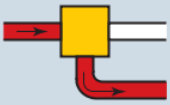
Reversing (four-way)	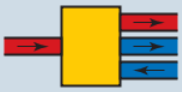	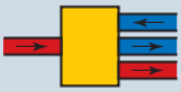
Pressure regulating (modulating)		
Check		

Goodheart-Willcox Publisher

Figure 22-10. Five common types of valves. Position 1 represents the normal condition of the valve. Position 2 shows how operating the valve affects refrigerant flow.

Copyright Goodheart-Willcox Co., Inc.

Valves can be classified according to their build, how they operate, and the function they perform within a refrigeration system. The following content covers various refrigerant flow valves found in HVACR systems. Additional information about these and other types of valves will be presented in later chapters.

22.3.1 Refrigerant Line Valves

Refrigerant line valves control the flow of refrigerant through system piping. These valves can be closed to cut off refrigerant flow through a section of the system. Two styles of refrigerant line valves are available: two-way valves and three-way valves.

A two-way refrigerant line valve has a straight or elbow-shaped valve body. It stops the flow of refrigerant when it is turned clockwise (front seated). A three-way refrigerant line valve has a tee-shaped valve body. It is used to shut off just one of the three connections to the valve. The other two connections, remaining open, permit the passage of refrigerant to the rest of the system. See **Figure 22-11**.

22.3.2 Shutoff Valves

Shutoff valves are a common type of two-way valve used to shut down flow through a refrigerant line. This type of valve might be used to isolate components of a system for service. These valves are designed to be turned easily so that they can be operated by hand, **Figure 22-12**.

Commercial refrigeration systems with multiple evaporators are usually equipped with shutoff valves that block or permit refrigerant flow through the individual evaporators. Shutoff valves used in these applications are often classified as either riser valves or manifold valves.

Manifold Valves

Shutoff valves installed near suction line and liquid line manifolds are called ***manifold valves***. In multiple-evaporator systems, smaller suction lines run from each evaporator to a manifold. A single, larger suction line runs from the manifold to the compressor inlet. Manifold valves are mounted between the manifold and each of the individual suction lines from the evaporators. These manifold valves permit any one of the suction lines to be closed without interfering with the operation of the others.

A similar arrangement is used on the high side of a system. A ***liquid line manifold*** distributes high-pressure liquid refrigerant to separate metering devices and their corresponding evaporators. Manifold valves at each manifold outlet are used to block or allow

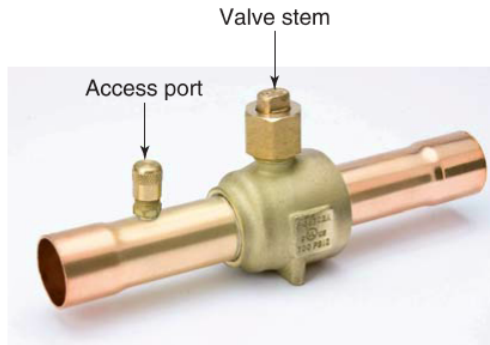

Straight Two-Way Refrigerant Line Valve

Angled Two-Way Refrigerant Line Valve

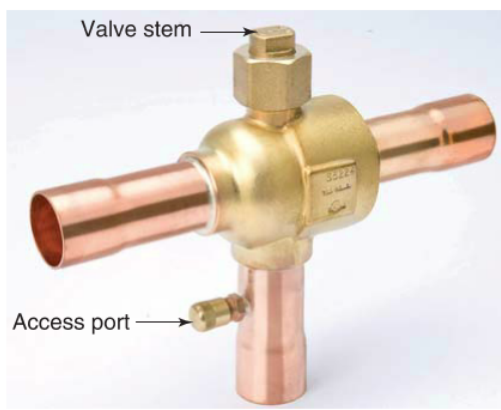

Three-Way Refrigerant Line Valve

Mueller Industries, Inc.

Figure 22-11. Different types of refrigerant line valves.

Copyright Goodheart-Willcox Co., Inc.

Mueller Industries, Inc.

Figure 22-12. Manual shutoff valves are used in multiple-evaporator systems to control refrigerant flow to each evaporator.

refrigerant flow to the individual evaporators. These valves are often mounted in a cabinet or on a special valve board near the condenser.

Riser Valves

A ***riser*** is a length of vertical refrigerant line. Shutoff valves that control refrigerant flow through liquid risers and suction risers are commonly referred to as ***riser valves***. Riser valves can be elbows or tees.

For an elbow-type riser valve, front seating the valve shuts off flow through the valve. For a tee-type riser valve, front seating the valve closes the opening that is at a right angle to the other two.

Riser valves are usually made of drop-forged brass to reduce leakage through the valve body, and the valve stem may be either brass or steel. Riser valves may have packing around the valve stem to prevent leakage, or they may be the packless type. Packless valves use a bellows or a diaphragm as a sealing device rather than packing.

22.3.3 Service Valves

Service valves enable technicians to seal off parts of a refrigeration system and provide a connection to the system for taking pressure readings, adding or removing refrigerant or oil, and other service work. Several types of service valves are available. Larger service valves may have handwheels on their valve stems, but most valve stems are made so that a refrigeration service valve wrench is needed to turn them. Valve bodies are usually made of drop-forged brass, and valve stems are made of steel or brass. Packing and a packing nut are installed around the valve stem to keep it from leaking.

Service valves are fastened to tubing or pipe using flared or brazed connections. They may also be attached by pipe threads or bolted flanges. Most systems have service valves installed in the suction and discharge lines at the compressor. Many systems are also equipped with additional service valves, such as a service valve at the outlet of the liquid receiver (king valve) and the inlet of the receiver (queen valve). See Chapter 10, *Equipment and Instruments for Refrigerant Handling and Service*, for additional information about service valves.

22.3.4 Check Valves

Check valves are valves that permit fluid flow in only one direction. They play an important function in refrigeration systems by preventing the flow of liquid and vapor refrigerant in the wrong direction. In larger commercial refrigeration systems, check valves prevent unwanted refrigerant migration during the Off cycle, **Figure 22-13**.

A check valve may use either a disk or a solid ball to seal the valve opening. Some use a spring or magnet to keep the valve against its seat. Others are mounted so that the weight of the valve keeps it against its seat. This type of check valve is sometimes referred to as a weight valve. A weight valve is frequently installed on the evaporator inlets of high-side float systems if the float assemblies are located away from the evaporators.

Pro Tip

Check Valve Noise

Check valves can be a source of noise in a refrigeration system, because they open and close with a metallic click or bang. Valves have been designed to minimize this noise problem. However, there is also noise associated with the inefficient operation of a valve. A "hammering" noise occurs when the valve does not completely close off the reverse flow.

Multiple-Evaporator Applications

Check valves are often used to stop ***refrigerant migration***, which is the movement of refrigerant in a

Copyright Goodheart-Willcox Co., Inc.

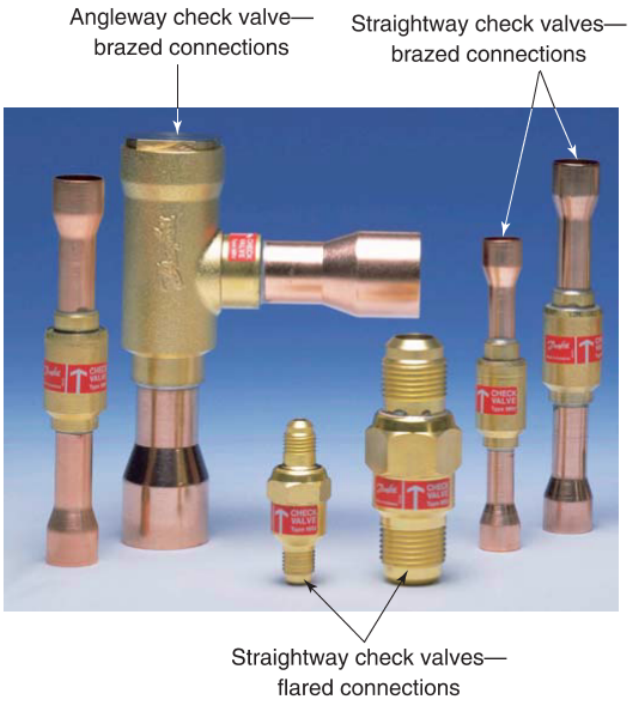

Types of Check Valves

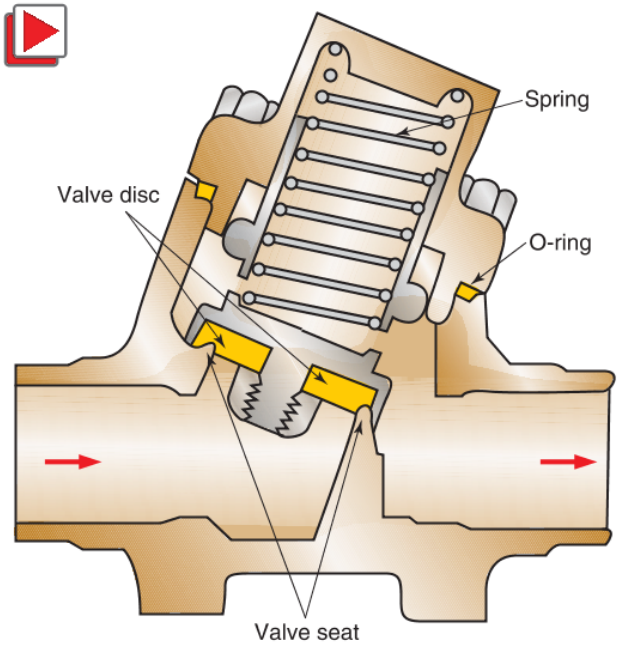

Cross Section of Check Valve

Danfoss; Superior Refrigeration Products

Figure 22-13. Check valves allow refrigerant flowing in one direction to pass while blocking refrigerant flow in the opposite direction.

system during the Off cycle. Many commercial systems have multiple evaporators that connect to a single condenser. These evaporators usually operate at different temperatures and different pressures, which can cause problems on the low side of the system. As a result, each evaporator, except for the evaporator operating at the lowest pressure, has an evaporator pressure regulator (EPR) connected at its outlet. EPRs maintain a minimum pressure in each evaporator and prevent them from operating at the lowest pressure being pulled by the compressors. Remember the principles of Gay-Lussac's law, so that the evaporator with the lowest pressure also operates at the lowest temperature. This lowest-temperature evaporator has a check valve installed at its outlet, instead of an EPR. The check valve prevents excess warming during the Off cycle.

After the compressor has stopped, one of the EPRs may open before the compressor turns on again. This action floods the low side with warm refrigerant vapor, which migrates along the suction line. If there were no check valve, this warm refrigerant could enter the coldest evaporator. If the warm refrigerant vapor enters the coldest evaporator, it will start condensing and releasing heat. Since refrigerant can only flow through a check valve in one direction, the check valve installed at the outlet of the coldest evaporator prevents the warm refrigerant vapor from warming up the evaporator.

Check valves must have tight seals to prevent refrigerant from leaking past the valve seat against the desired direction of flow. Such leakage is an example of refrigerant migration. Check valves should also be quick to open when refrigerant flow in the desired direction is required. If the valve opening is too small or if the valve opens with difficulty, it will act as a throttling device and create a large pressure drop. The result will be poor refrigeration in the coldest evaporator.

Heat Pump Applications

Check valves are also frequently used in heat pump systems to bypass one of the expansion valves. Some heat pumps use two separate metering devices. Each one is set up to operate for only one mode of operation. One expansion valve operates during heating mode, and the other operates during cooling mode.

When one of a heat pump's expansion valves should not be in operation, refrigerant flows around it in a bypass refrigerant line that is regulated by a check valve. When the expansion valve should be in operation, the check valve closes to force refrigerant to flow through the expansion valve.

Copyright Goodheart-Willcox Co., Inc.

22.3.5 Solenoid Valves

A ***solenoid valve*** is an electromagnet with a movable core (called a plunger) that opens and closes a fluid passage. Solenoid valves are used in many HVACR applications. They are used to automatically close or open refrigerant circuits and are frequently activated and deactivated by a thermostat or other control device. A solenoid valve is easily installed and requires only simple electrical circuits.

A solenoid's plunger is usually made of an iron alloy and is sealed into the valve body, where it is free to slide up and down inside the plunger tube. An electromagnetic coil is positioned around the plunger tube. The components of a typical solenoid are shown in **Figure 22-14**.

Gravity or spring pressure forces a solenoid's plunger into its seat, closing the valve. When the coil is energized, a magnetic field is generated. This pulls the plunger upward toward the center of the coil, opening the valve. The valve stays open until the circuit is opened and the coil is de-energized. When power to the coil is interrupted, gravity causes the plunger to drop, closing the valve. The basic operation of a solenoid valve is shown in **Figure 22-15**.

When a solenoid is de-energized and its valve is closed, it is referred to as a normally closed (NC) solenoid valve. Many solenoid valves are NC. However, some solenoid valves are available that remain open when de-energized and close when the solenoid winding is energized. This type of valve is referred to as a normally open (NO) solenoid valve. Solenoid valves can be further classified as two-way, three-way, or four-way valves based on the number of inputs and outputs.

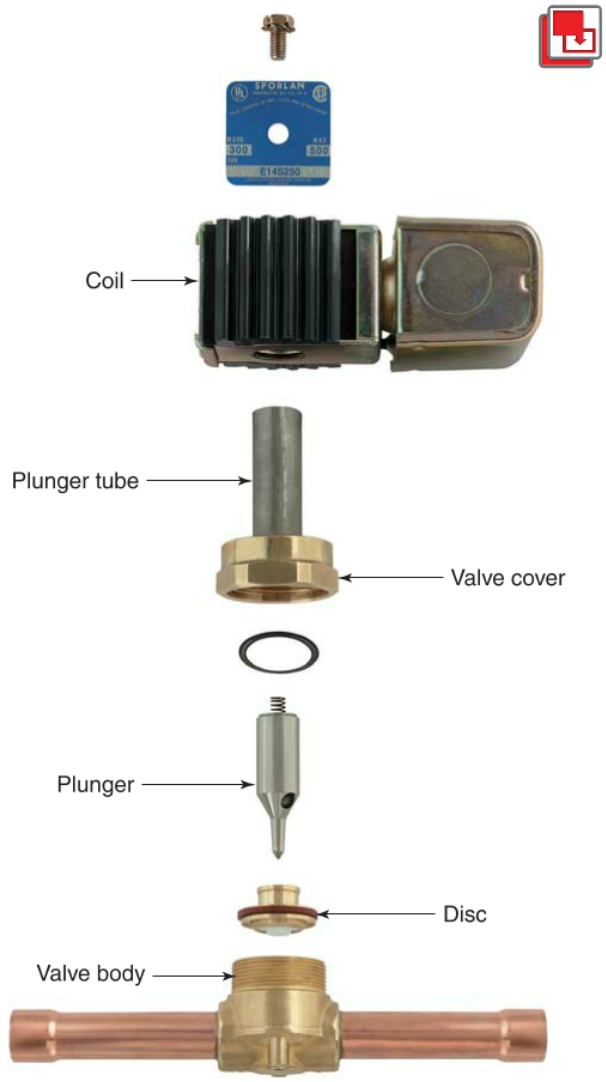

Courtesy of Sporlan Division - Parker Hannifin Corporation

Figure 22-14. Solenoid valve components.

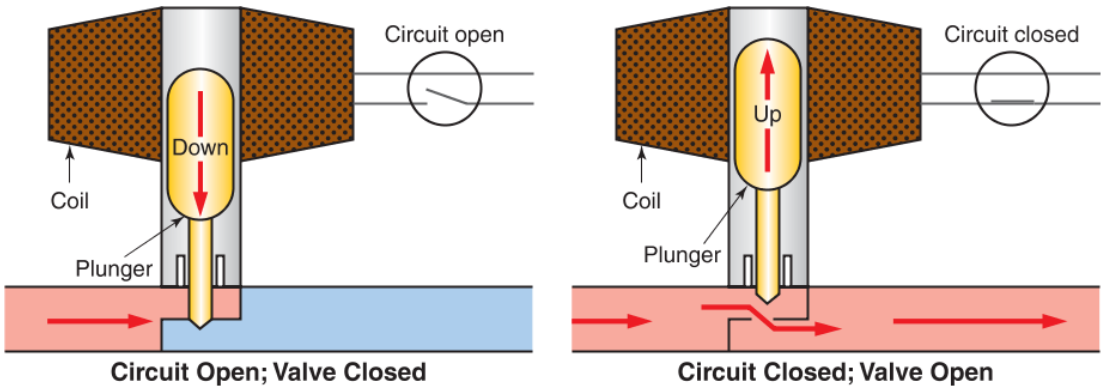

Goodheart-Willcox Publisher

Figure 22-15. The two positions of a solenoid valve.

Copyright Goodheart-Willcox Co., Inc.

Two-Way Solenoid Valves

Two-way valves control the flow of refrigerant through a single route. Two-way valves have a single inlet and a single outlet. They are used to block refrigerant flow through a single circuit on demand. See **Figure 22-16**.

A common application of a two-way solenoid valve is in the liquid line of systems that pump down during the Off cycle. During the On cycle, the solenoid valve opens to allow full flow. During pump-down for the Off cycle, the solenoid valve closes to block the liquid line. Two-way solenoid valves are also common on hot-gas defrost systems.

Three-Way Solenoid Valves

Three-way valves have a single inlet and two outlets. They control refrigerant flow in two different lines. Three-way solenoid valves are used mainly on commercial refrigeration systems. They may be used to control two separate refrigerant circuits for defrosting or for two-temperature evaporators. **Figure 22-17** shows a three-way solenoid valve intended for use in a hot-gas defrost application.

A thermostatic expansion valve may open intermittently (opening and closing frequently) during the Off cycle. This is caused by temperature fluctuations, such as when the door of a refrigerated display case is opened. To prevent the thermostatic expansion valve from intermittently opening, a three-way solenoid valve can be used to divert high-side pressure to the underside of the thermostatic expansion valve's diaphragm during the Off cycle. This forces the TXV closed, and keeps it closed, **Figure 22-18**.

In these types of designs, a three-way solenoid valve is connected into the equalizer tube. The electrical circuit to the solenoid valve is interrupted when the compressor shuts down. This causes the solenoid valve's position to change, closing the passage between the suction line and the equalizer tube. This action opens a passage between the liquid line and the equalizer tube. High-pressure refrigerant then enters the top of the solenoid valve. The refrigerant passes upward through the equalizer tube. This forces the TXV's diaphragm up, closing the valve.

Reversing Valves (Four-Way Valves)

Four-way solenoid valves are often called reversing valves. *Reversing valves* reverse the flow of refrigerant through a system. They are frequently used in heat pumps. They are available in a variety of sizes, and are used chiefly on heat pumps to switch between heating and cooling modes as needed, **Figure 22-19**.

Courtesy of Sporlan Division - Parker Hannifin Corporation

Figure 22-16. A two-way solenoid valve.

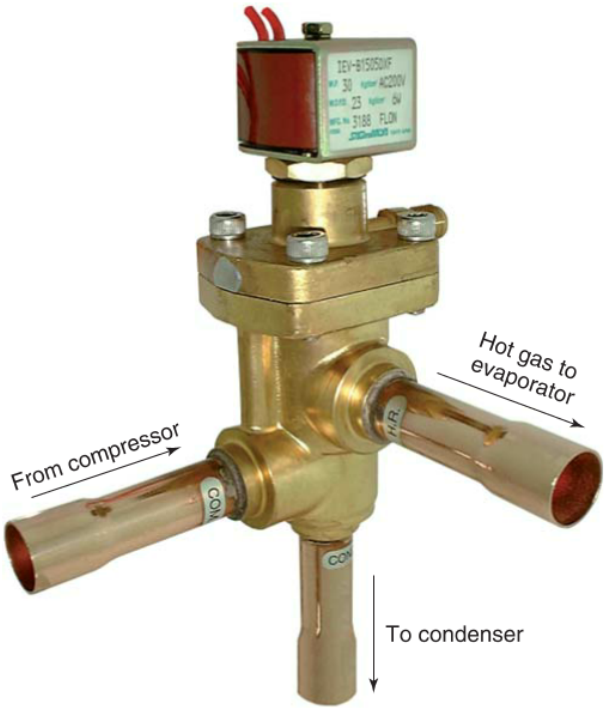

Danfoss

Figure 22-17. Typical three-way solenoid valve used for hot-gas bypass systems. Note the inlet from the compressor, the outlet to the condenser, and the hot gas outlet to the evaporator.

Copyright Goodheart-Willcox Co., Inc.

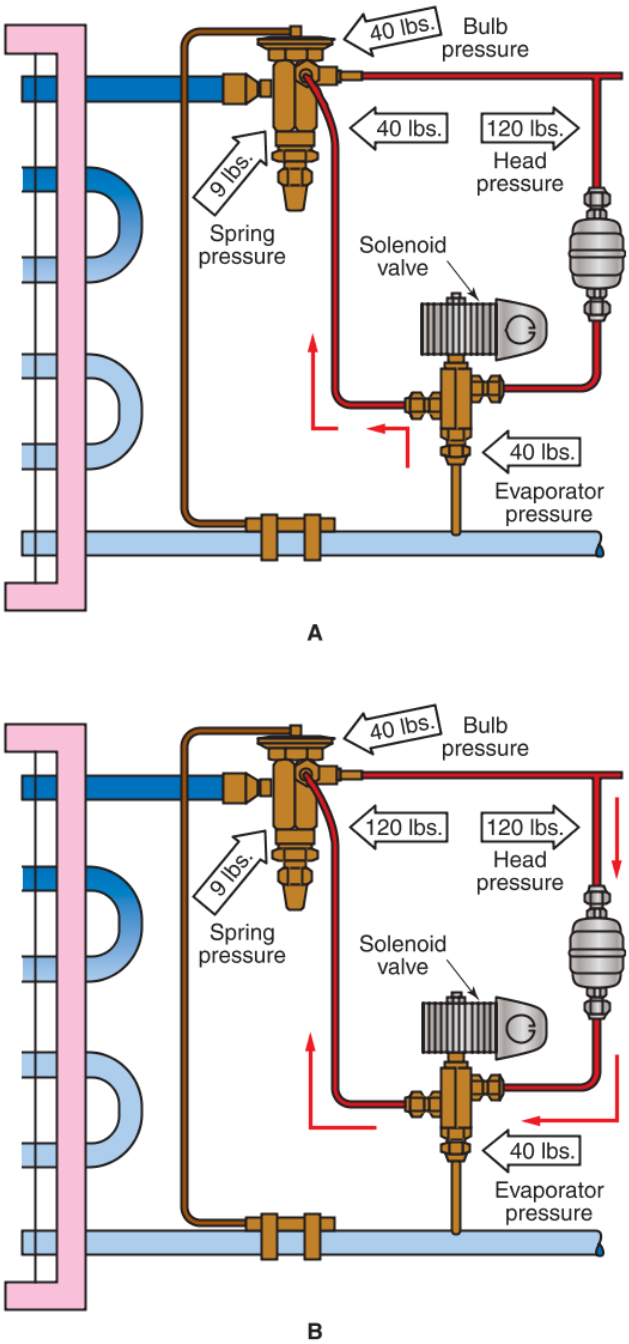

Courtesy of Sporlan Division - Parker Hannifin Corporation

Figure 22-18. In this drawing, a three-way solenoid valve is used to keep the thermostatic expansion valve tightly closed during the Off cycle. A—When the compressor is on, the solenoid valve is energized. Suction line pressure is transmitted through equalizer tube to the thermostatic expansion valve, and On cycle operation is normal. B—When power to the compressor is cut, the solenoid valve is de-energized. The solenoid valve's plunger changes position, allowing high-pressure refrigerant to flow up the equalizer tube to close the expansion valve.

Danfoss

Figure 22-19. Typical solenoid-operated four-way reversing valves.

Reversing valves are commonly solenoid operated. Many now use a solenoid valve to operate a pilot valve. The pilot valve in turn uses high-pressure vapor from the compressor to operate the four-way valve. Operation of a typical reversing valve is shown in **Figure 22-20**.

A reversing valve consists of a cylinder with a piston inside. The piston has three different internal passages. When the system is in cooling mode, the solenoid is de-energized. High-pressure vapor is directed to push the piston so that passage has refrigerant flowing from the indoor coil to the compressor's suction side. The indoor coil functions as an evaporator and the outdoor coil is the condenser, as shown in **Figure 22-20A**.

When the system is switched to the heating mode, the solenoid is energized. High-pressure vapor moves the piston so that the outdoor coil is connected to the compressor's suction side. The outdoor coil becomes the evaporator and the indoor coil becomes the condenser, as shown in **Figure 22-20B**.

Pro Tip

Direct-Acting and Pilot-Operated Solenoid Valves

When a solenoid operates the valve mechanism directly, the valve is referred to as a direct-acting solenoid valve. If the solenoid is used to operate a small pilot valve, which in turn operates the main valve, the unit is referred to as a pilot-operated solenoid valve.

22.3.6 Hot-Gas Defrost Valves

If a conditioned space reaches temperatures below freezing, the refrigeration system serving the space should have defrosting capability. A quick and effective method of defrosting is running hot-gas refrigerant from the compressor discharge line through the evaporator. This process is known as *hot-gas defrost*, **Figure 22-21**.

Copyright Goodheart-Willcox Co., Inc.

A bypass line between the compressor discharge line and the evaporator is often regulated by a solenoid valve that serves as the hot-gas bypass valve. When a ***hot-gas defrost valve*** opens, it allows hot-gas refrigerant from the discharge line to enter the evaporator and flow through the low side of the system. The heat from the hot-gas refrigerant quickly heats and melts any frost or ice accumulation on the evaporator. The refrigerant vapor flows back to the compressor through the suction line.

22.3.7 Hot-Gas Bypass Valves

Operating and load conditions in commercial refrigeration systems may cause the temperature and pressure in the suction line and low-side components to drop too low. These low-pressure and low-temperature conditions can result in damage to the compressor or can cause a system to cycle off prematurely. To alleviate such conditions, a regulated amount of high-side refrigerant can be directed into the low side, bypassing the system's condenser and refrigerant control.

A ***hot-gas bypass valve*** is a valve that regulates certain amounts of hot refrigerant vapor from the discharge line to enter the low-side of the system for the sake of capacity control. Its inlet is connected to the discharge line after the oil separator, and its outlet normally connects to the suction line or evaporator distributor. When low-side pressure drops too low, a hot-gas bypass valve opens, allowing a measured amount of hot-gas refrigerant to enter the low side to raise pressure. The hot bypass gas warms the cool suction gas, raising the pressure in the suction line.

Pro Tip

Hot-Gas Valves

It is important to differentiate between hot-gas defrost and hot-gas bypass. While a hot-gas defrost valve is used to provide a lot of hot-gas refrigerant to defrost an evaporator quickly, a hot-gas bypass valve is used to provide smaller amounts of hot gas to alleviate low-load conditions. Bypassed hot gas prevents compressor damage and avoids prematurely cycling off the system.

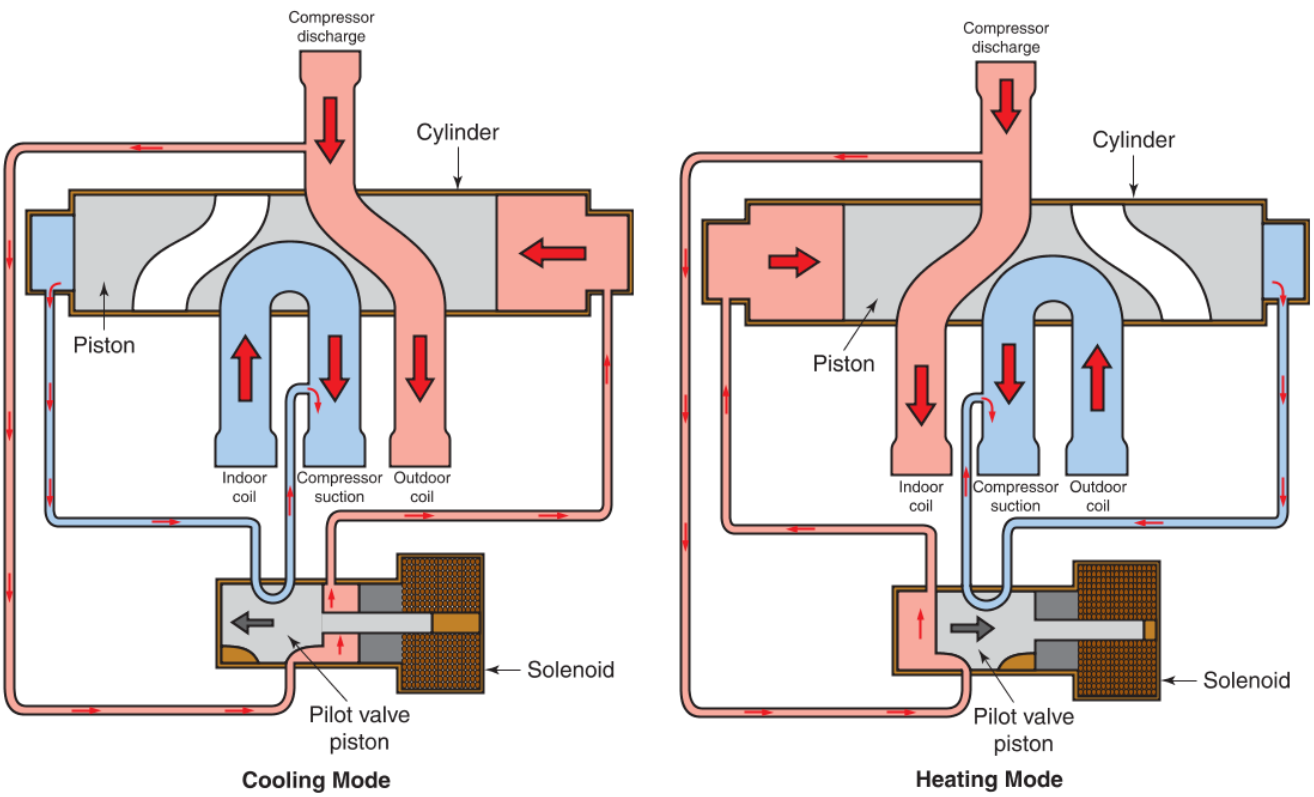

Goodheart-Willcox Publisher

Figure 22-20. Reversing valve operation. Cooling Mode—The solenoid is de-energized. The pilot valve diverts high-pressure vapor to the right side of the reversing valve's cylinder, which pushes the reversing valve's piston to the left. This directs high-pressure vapor from the compressor to the outdoor coil and allows the compressor to draw in from the indoor coil. Heating Mode—The solenoid is energized, pulling the pilot valve piston to the right. High-pressure vapor pushes the reversing valve piston to the right. This directs high-pressure vapor from the compressor into the indoor coil and allows the compressor to draw in from the outdoor coil.

Copyright Goodheart-Willcox Co., Inc.

There are two basic types of hot-gas bypass valves that are classified by the variable on which they operate: pressure and temperature. Many hot-gas bypass valves function like a constant pressure valve. If low-side pressure drops below the valve's setting, it will open to meter hot gas to the low side. These valves look and operate much like automatic expansion valves, **Figure 22-22**.

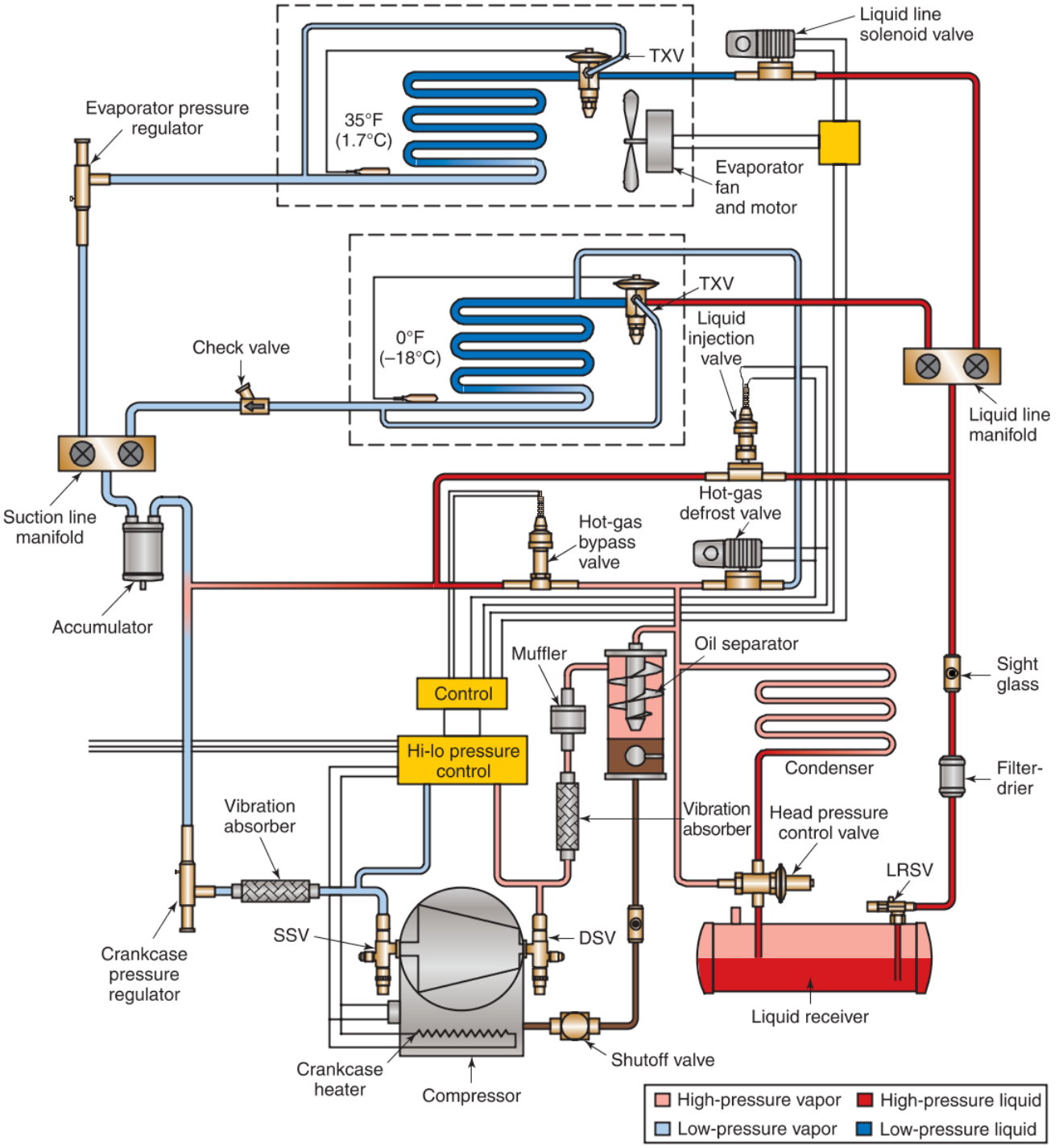

Goodheart-Willcox Publisher

Figure 22-21. The combination of components in this commercial system makes the unit work more efficiently. The inclusion of certain components, like various service valves, makes this system easier to service.

Copyright Goodheart-Willcox Co., Inc.

Courtesy of Sporlan Division - Parker Hannifin Corporation

Figure 22-22. This hot-gas bypass valve operates based on pressure, much like an automatic expansion valve (AEV).

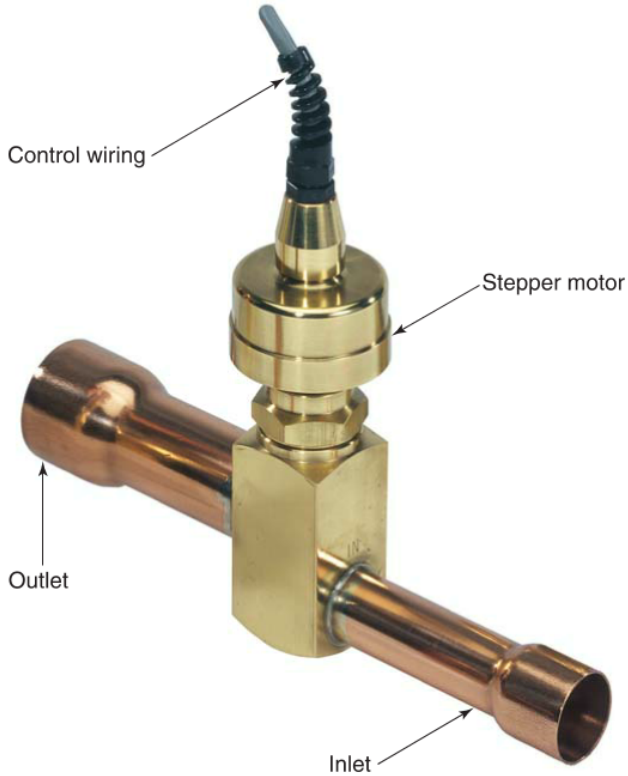

Courtesy of Sporlan Division - Parker Hannifin Corporation

Figure 22-23. This hot-gas bypass valve operates based on temperature, much like an electronic expansion valve (EEV).

Temperature-operated hot-gas bypass valves use a temperature sensor and a controller to determine when and how much refrigerant to meter from high to low sides. These valves look and operate much like electronic expansion valves EEVs, **Figure 22-23**.

Pro Tip

Hot-Gas Bypass Valves

The phase *hot-gas bypass* describes what the valve does, not the type of valve mechanism used. Different modulating valves can be set up to function as hot-gas bypass valves. Knowing how a hot-gas bypass valve operates within a system is necessary to installing, commissioning, and troubleshooting.

22.3.8 Liquid Injection Valves

At times, bypassed discharge hot gas may be too hot for the low side. To reduce the temperature of the hot gas, a ***liquid injection valve*** opens to allow warm liquid refrigerant from the liquid line to mix with and cool the bypassed hot-gas refrigerant vapor. This cooling of vapor using liquid desuperheats the hot gas (reduces its temperature). A sensing bulb allows a liquid injection valve to operate based on the superheat (sensible temperature) that it is sensing on the suction line. Many liquid injection valves look and operate much like thermostatic expansion valves, **Figure 22-24**.

Danfoss

Figure 22-24. These liquid injection valves operate based on superheat, much like a thermostatic expansion valve (TXV).

Pro Tip

Liquid Injection Valves

The term *liquid injection valve* describes the function of the valve, not a specific type of valve body. Injecting liquid into the low side desuperheats (reduces the sensible heat of) the hot-gas refrigerant from the discharge line. For this reason, liquid injection valves are also commonly referred to as *desuperheater valves*, **Figure 22-25**.

Copyright Goodheart-Willcox Co., Inc.

22.4 Pressure-Regulating Valves

Pressure-regulating valves modulate refrigerant flow to maintain a desired pressure. Commercial refrigeration systems use many types of pressure-regulating valves. These valves perform a variety of tasks, including controlling pressure in the evaporator, pressure in the crankcase, discharge bypass pressure, and head pressure. Some of these valves have access ports for gauge mounting.

22.4.1 Crankcase Pressure Regulators (CPRs)

A crankcase pressure regulator (CPR) is a pressure-regulating valve installed between a suction line and a compressor inlet. It limits the pressure in the compressor crankcase. This prevents a compressor's motor from overloading due to high suction pressure, **Figure 22-26**.

A CPR closes as pressure in a compressor's crankcase increases. Low-side pressure exerts force both upward on the underside of a CPR's bellows and downward on the topside of the seat disc. Therefore, inlet pressure from the suction line cancels out itself and has no effect on the operation of a CPR. That leaves only the pressure of the spring to push open the seat disc, **Figure 22-27**.

When crankcase pressure is low enough, spring pressure pushes open the valve seat, allowing vapor refrigerant to flow into the compressor. When crankcase pressure rises too high, it pushes back against the seat disc and closes the valve, stopping the flow of vapor refrigerant from the suction line.

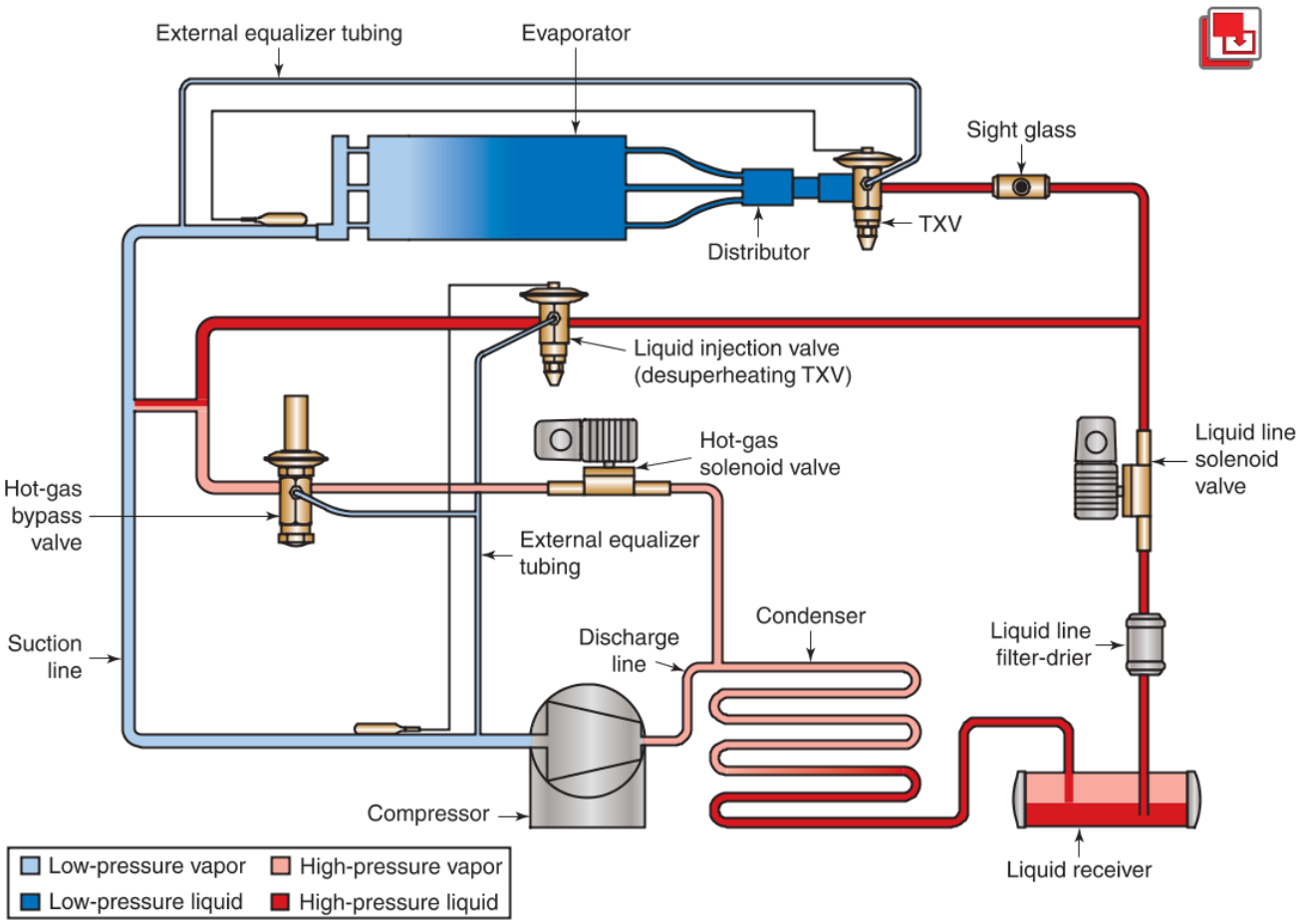

Courtesy of Sporlan Division - Parker Hannifin Corporation

Figure 22-25. Diagram showing the arrangement of a refrigeration system using a hot-gas bypass valve and a liquid injection valve.

Copyright Goodheart-Willcox Co., Inc.

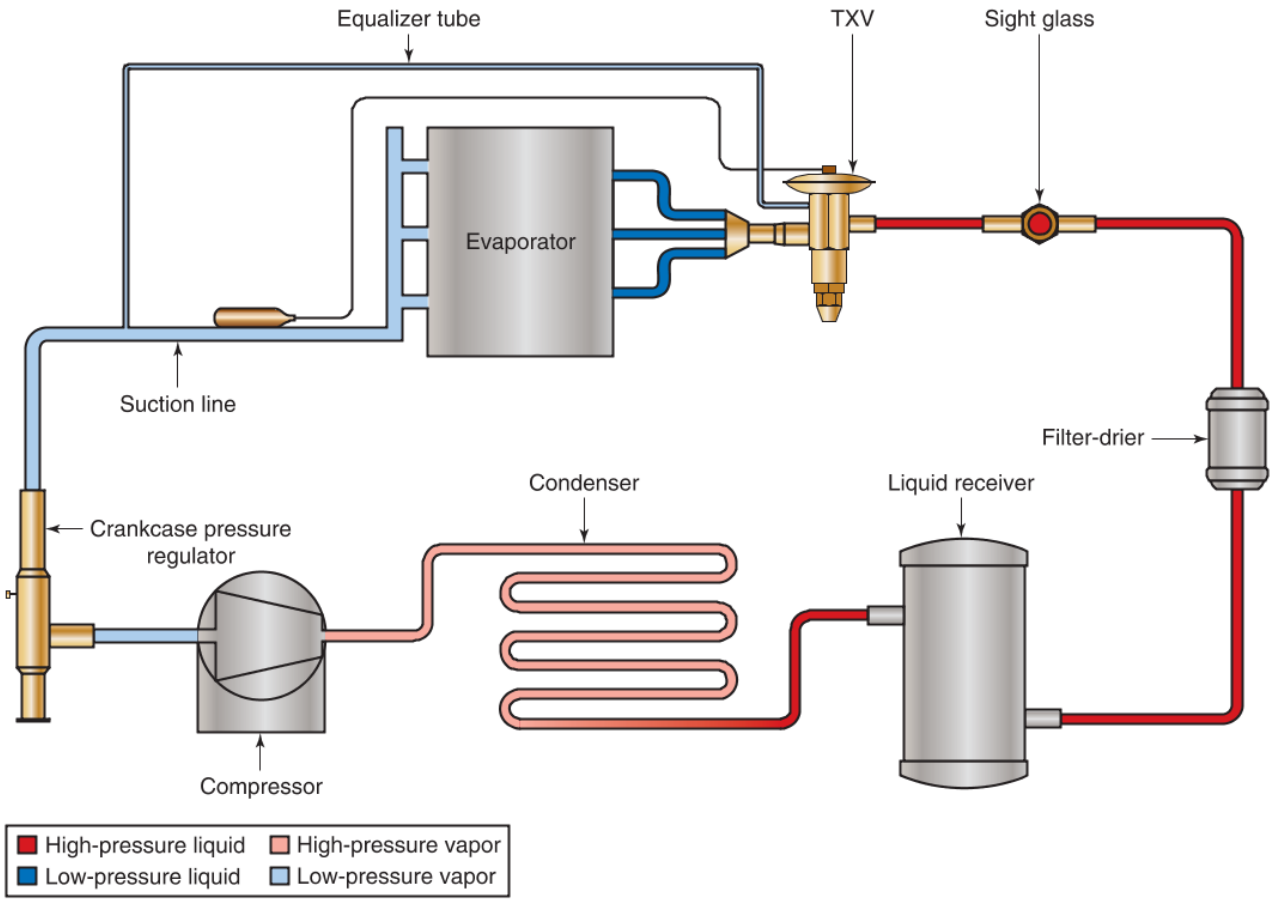

Goodheart-Willcox Publisher

Figure 22-26. A compressor pressure regulator (CPR) is located in the suction line of this system and throttles refrigerant flow to prevent high pressure from causing the compressor motor to overload.

Pro Tip

Control Valve Names

Control valves in the HVACR field can be called by many names. Sometimes the focus of the name is on their function in the system or based on how they operate. A crankcase pressure regulator may also be called by the following names: *crankcase pressure-regulating valve*, *suction regulator valve*, *compressor low-side pressure control valve*, and *reverse metering, evaporator control valve*.

Crankcase pressure regulators are needed for situations in which the compressor runs too long before the low side drops to a pressure that will not overload the compressor motor. The suction line pressure may exceed the safe pressure. However, in this event, the crankcase pressure regulator throttles the path between the suction line and the compressor, protecting the compressor from a high pressure. A calibration screw on the crankcase pressure regulator allows a service technician to set the CPR according to the rated load amperage (RLA) of the compressor's motor.

By maintaining a reduced pressure load that the compressor motor must act against during starting, a crankcase pressure regulator limits the high current necessary for the compressor motor to operate. Lower pressure means less current. Less current means less chance of an electrical overload happening to the compressor motor. A crankcase pressure regulator reduces the higher suction line pressure that is present during and after the defrost cycle, after a normal shutdown period, and for a hot pull down (starting a system with its conditioned space at ambient temperature).

A crankcase pressure regulator's valve body is usually made of brass and a pressure-sensing element, such as a diaphragm or bellows of phosphor bronze, **Figure 22-28**. The needle and seat are usually made of wear-resisting steel alloy. Crankcase pressure regulators may also be manufactured as pilot valves.

Copyright Goodheart-Willcox Co., Inc.

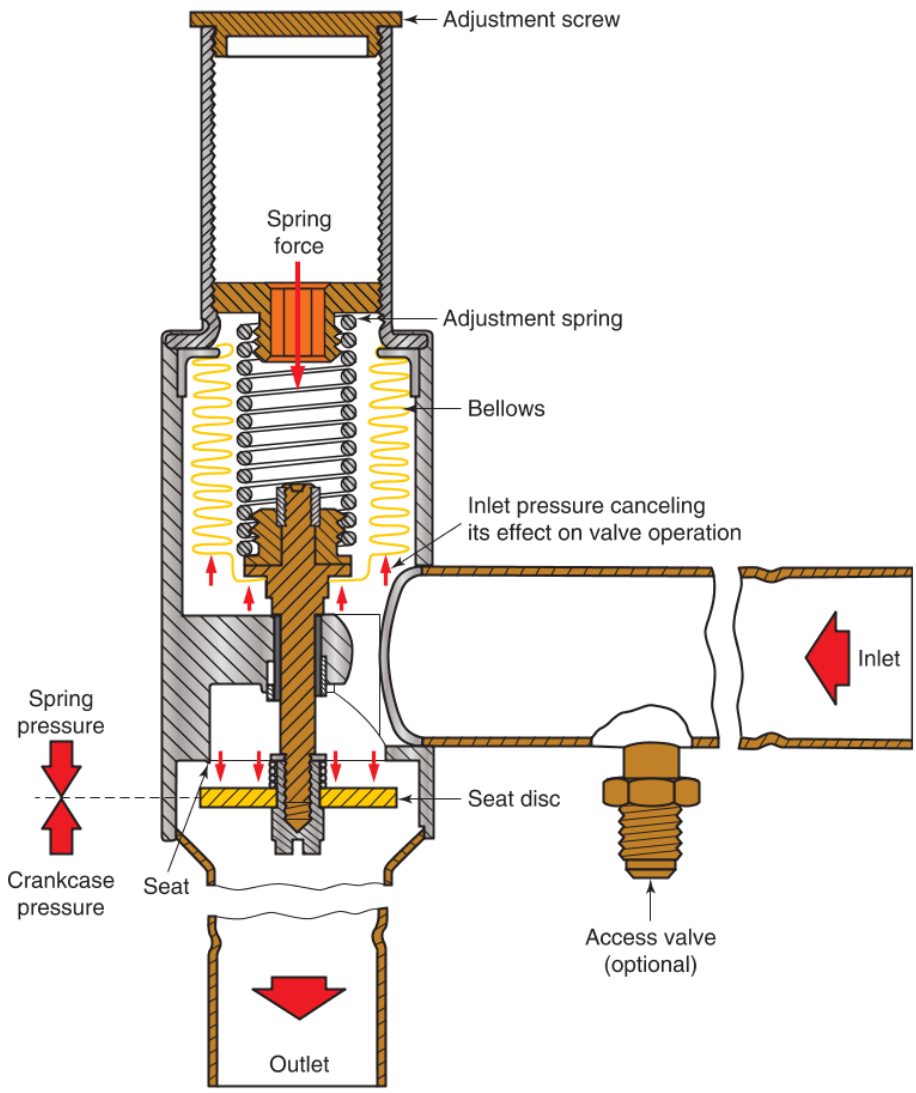

Courtesy of Sporlan Division - Parker Hannifin Corporation

Figure 22-27. Cutaway showing the inside of a crankcase pressure regulator. Note that inlet (suction line) pressure is exerted both on the bellows and on the seat disc, canceling out any effect it would have in opening the valve. Seat disc placement is determined only by spring pressure and crankcase pressure.

22.4.2 Evaporator Pressure Regulators (EPRs)

An ***evaporator pressure regulator (EPR)*** is a pressure-regulating valve that restricts the flow of refrigerant coming out of the evaporator. An EPR maintains a set minimum pressure in the evaporator while the refrigeration system is operating. Remember how Gay-Lussac's law describes the relationship between pressure and temperature in a fixed volume, such as an evaporator. As pressure drops, temperature drops. As pressure rises, temperature rises. By controlling evaporator pressure, EPRs control evaporator temperature, even when the suction line pressure drops lower than evaporator pressure, **Figure 22-29**.

EPRs are used in multiple-evaporator systems where each evaporator maintains a different temperature. This is common in commercial refrigeration where display cases have contents requiring low-temperature and medium temperature cooling. EPRs are also used on chiller systems where evaporator temperature must not reach freezing temperatures.

The evaporators in multiple-evaporator installations share a common suction line. This suction line has a low pressure that is common to all the evaporators. While many factors contribute to evaporator

Copyright Goodheart-Willcox Co., Inc.

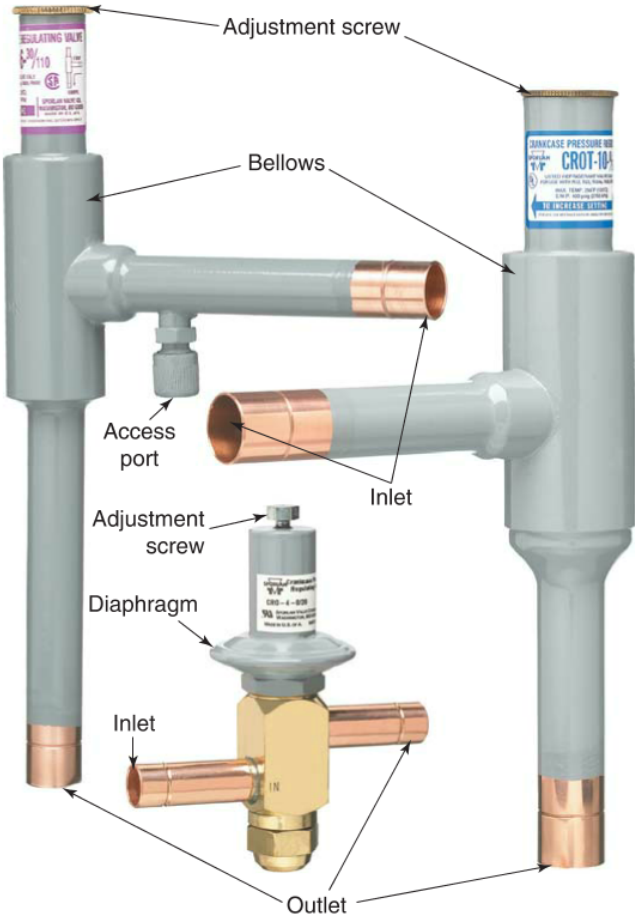

Courtesy of Sporlan Division - Parker Hannifin Corporation

Figure 22-28. Three variations of crankcase pressure regulators.

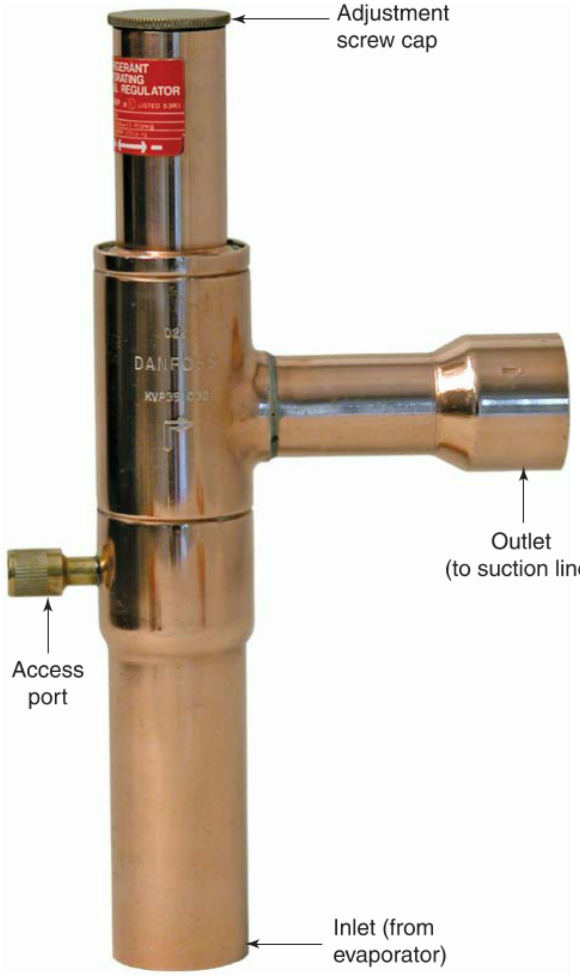

Danfoss

Figure 22-29. An evaporator pressure regulator maintains the desired evaporator pressure by metering the refrigerant leaving the evaporator.

temperature, HVACR systems control evaporator temperature by controlling evaporator pressure. EPRs are especially necessary when a multiple-evaporator installation with a single suction line needs to operate multiple evaporators at different temperatures.

Thermostatic expansion valves are often the devices controlling the refrigerant entering evaporators in a multiple-evaporator installation. However, the temperature difference among TXV-controlled evaporators in a multiple-evaporator installation may not exceed 5°F (3°C). For a greater temperature difference, additional methods must be used to control evaporator pressure.

To create a greater temperature difference, an evaporator pressure regulator (EPR) is attached between the suction line and the outlet of an evaporator that needs to be at a higher temperature. The EPR prevents pressure in the warmer evaporator from going below a calibrated low-pressure set point. By keeping an evaporator's pressure higher than suction line pressure, an EPR can maintain a correspondingly higher temperature in its evaporator. The higher pressure results in higher temperature. While the compressor produces a low pressure in the suction line and any low-temperature evaporators, an evaporator with an EPR can maintain a higher pressure and a higher temperature.

An evaporator pressure regulator (EPR) restricts the flow of refrigerant coming out of an evaporator in order to prevent evaporator pressure from dropping below a set point. By maintaining a minimum pressure in the evaporator, EPRs ensure that the evaporator will not drop below a minimum temperature. Maintaining a minimum pressure in the evaporator is an EPR's only function. Pressure can rise so that the valve is pushed fully open, as if it were not even in the line. Generally, evaporator pressure regulators are a type of modulating control that open and close variably in response to evaporator pressure. However, there are some evaporator pressure regulators that are

Copyright Goodheart-Willcox Co., Inc.

designed to either pop completely open or remain completely closed.

Pro Tip

Evaporator Pressure Regulator Names

HVACR is a broad industry with a diverse jargon. For instance, evaporator pressure regulators may be referred to by several other names. One such name is *holdback valve* (the regulator "holds back" some of the refrigerant from the evaporator as it maintains its set pressure in the evaporator. An EPR may also be called an *open on rise of inlet pressure (ORI)* valve. This is because an EPR's valve opens when the pressure of the evaporator rises to and above the EPR's calibrated minimum pressure setting, as pressure pushes against the valve inlet. Another name for an EPR is *two-temperature valve*, because it is used in multiple-evaporator systems to maintain at least two temperatures in different evaporators. A higher temperature is maintained in an evaporator with an EPR, and a lower temperature is maintained in other evaporators. An EPR may also be called a *constant pressure valve*, as it is used to ensure a constant pressure in its evaporator.

An EPR consists of an adjustment spring, a bellows or diaphragm, a needle, and a seat. Two opposing forces work together to operate evaporator pressure regulators. The bellows or diaphragm operates by the pressure of the adjustment spring in one direction trying to shut the valve. The pressure from the evaporator refrigerant pushes in the other direction trying to open the valve, **Figure 22-30**.

When an HVACR system cycles on, the compressor pumps, and low-side pressure begins to drop. Once the low-pressure set point in an EPR-controlled evaporator is reached, the adjustment spring in the EPR closes the valve. This action stops the pressure in the warmest evaporators from going below the low-pressure set point. Pressure in the evaporator builds up from refrigerant that continues to vaporize in the evaporator. Once evaporator pressure builds up high enough, it pushes against the adjustment spring to open the valve and pass vapor on to the suction line and compressor.

Caution

Evaporator Loading and EPRs

An evaporator controlled by an EPR should not have more than 40% of the system's total load. If an EPR-controlled evaporator is too large, erratic cycling can result. If the controlled load is more than 40%, separate condensers should be used. If it is necessary to determine whether an evaporator coil is the proper size for the condensing unit being used, the technician will need to use the model number of the evaporator coil and the condensing unit to cross-reference coil design specifications on the manufacturer's website.

There are two general types of mechanically operated evaporator pressure regulators: metering and snap-action. Newer electric EPRs operated by stepper motors are also available.

Metering Evaporator Pressure Regulators

A ***metering evaporator pressure regulator*** varies its valve opening in proportion to evaporator pressure. The higher the evaporator pressure, the more the valve opens. In this way, a metering EPR has a variable response to evaporator pressure. The valve can occupy

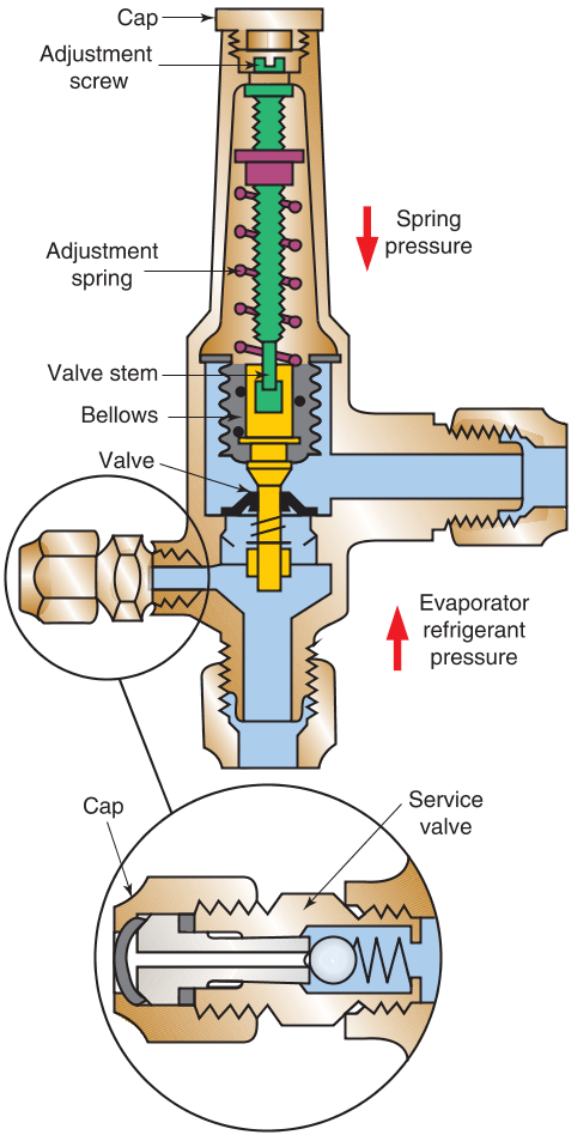

Goodheart-Willcox Publisher

Figure 22-30. Cross section of an evaporator pressure regulator showing its internal construction. Notice how spring pressure and evaporator refrigerant pressure push to close or open the valve.

Copyright Goodheart-Willcox Co., Inc.

any position ranging from fully closed to fully open. It acts more as a throttling device than as a shutoff valve.

Pro Tip

EPR Calibration Setting

EPRs have an access port on the evaporator side. This allows the technician to check and adjust the EPR's pressure setting.

An EPR's valve opening must be large enough to offer efficient vapor flow. Many of these metering controls have a small adjustment range. Large systems must rely on forces other than springs to control pressure for efficient operation. The large capacity evaporator pressure regulator in **Figure 22-31** uses a solenoid-operated pilot valve to move its main valve.

Snap-Action Evaporator Pressure Regulators

A ***snap-action evaporator pressure regulator*** has a definite cut-in pressure and temperature, allowing the valve to have only two states: fully open or fully closed. While metering EPRs can modulate their valve opening, a snap-action EPR is either open or closed.

When a snap-action EPR closes, a significant pressure rise occurs in the warm evaporator before the valve opens again. It is often used when defrosting is wanted on each cycle. A snap-action EPR is normally used in multiple-evaporator systems that do not operate at a wide temperature difference. Such systems include walk-in coolers and display cases. As with a metering EPR, a snap-action EPR could be installed between the evaporator outlet and the suction line.

Electric Evaporator Pressure Regulators

Over time, the importance of food preservation has prompted the continued innovation of HVACR controls. While evaporator pressure is important, a more important variable in refrigeration is evaporator outlet air temperature. Traditional spring-operated evaporator pressure regulators react to evaporator pressure. However, electric evaporator pressure regulators react directly to evaporator temperature.

An ***electric evaporator pressure regulator (EEPR)*** is a control valve, installed between an evaporator and a suction line, that proportionally modulates its valve position in reaction to evaporator temperature. Rather than moving its valve into position with a spring, EEPRs use a stepper motor. EEPRs closely resemble electronic expansion valves (EEVs). However, while EEVs are installed between a liquid line and an evaporator, an EEPR is installed between an evaporator and a suction line, **Figure 22-32**.

A thermistor or other temperature-sensing device is installed in the conditioned space where it senses the air cooled by the evaporator. The thermistor is connected to an electronic control module. When the control module transmits certain signals to the EEPR, the stepper motor moves the piston closer or further from the valve seat to modulate refrigerant flow out of the evaporator. The stepper motors used in these valves provide very precise flow control, as they can move the piston in very small increments, **Figure 22-33**.

The electronic control module contains specific programming, called an algorithm, that compares the reading from the temperature sensor with a set point

Courtesy of Sporlan Division - Parker Hannifin Corporation

Figure 22-31. Large capacity evaporator pressure regulator with a solenoid-operated pilot valve.

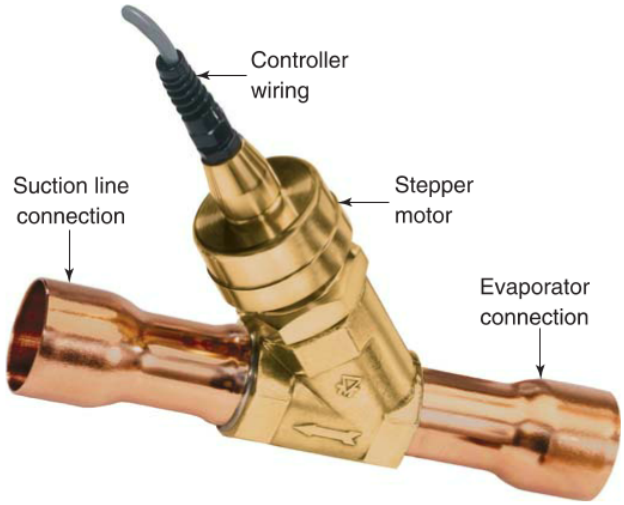

Courtesy of Sporlan Division - Parker Hannifin Corporation

Figure 22-32. An electronic controller regulates a stepper motor to modulate refrigerant flow by moving a piston closer or further from the port by fine increments.

Copyright Goodheart-Willcox Co., Inc.

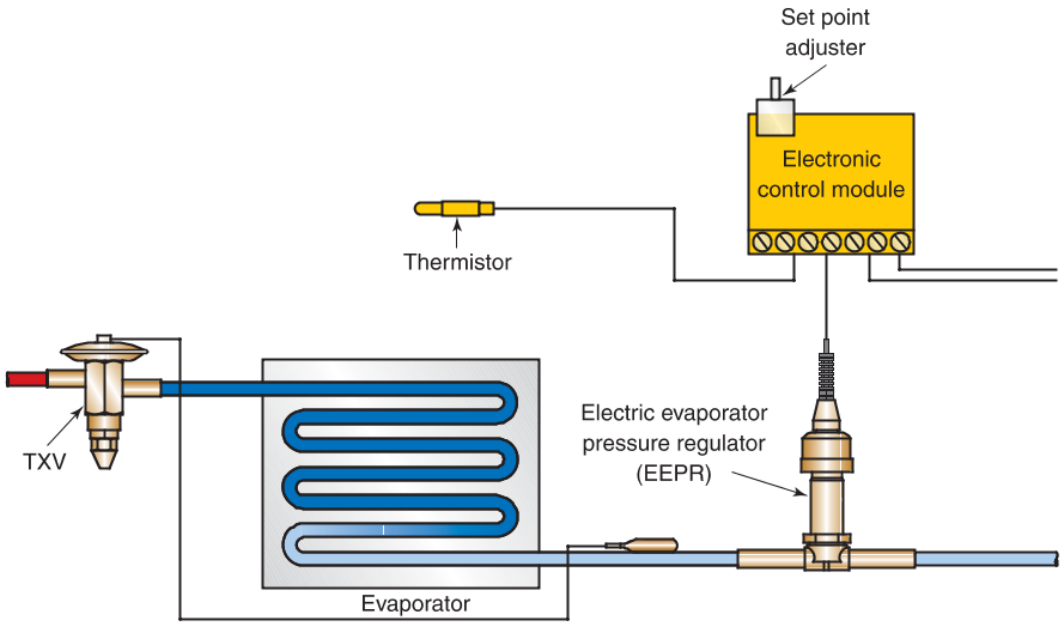

Courtesy of Sporlan Division - Parker Hannifin Corporation

Figure 22-33. A standalone control system diagram for an electric evaporator pressure regulator (EEPR).

and modulates the valve position to achieve that set point. The set point itself can be selected by the user and can be changed at any time.

When the temperature of the air, as felt by the sensor, is warmer than the desired temperature set point in the controller, the valve is given a signal to open. This allows refrigerant to evaporate at a lower suction pressure. The lower pressure evaporates the refrigerant at a lower temperature, cooling the evaporator to the set point. The controller modulates the valve to control temperature within very narrow limits.

Many systems are connected to energy management systems (EMS). The most common application of these systems is in supermarkets to maintain multiple evaporators at different temperatures. Some systems, however, are standalone—that is, they operate on their own according to their set point and are not connected to an energy management system.

22.4.3 Relief Valves

A compression refrigeration system, regardless of size, is a sealed and pressurized system. Although pressures may vary, excessively high pressures can cause some part of a system to explode or burst open. This might occur due to shutdowns, fires, extreme temperature conditions, or control malfunctions. Most often relief valves are used on larger commercial or industrial systems. Relief valves are generally located on a pressure vessel, such as a liquid receiver.

Relief valves are safety valves that prevent equipment damage or personal injury by venting refrigerant when pressure exceeds the maximum safe limit. If a relief valve is in an enclosed space, a purge line is attached to the relief valve's outlet to carry the vented refrigerant outside where it can be safely released. Relief valves are usually installed on the liquid receiver above the liquid level so that they are exposed to vapor refrigerant, not liquid refrigerant. This can help to minimize the loss of refrigerant. Most codes governing the installation and operation of compression refrigeration systems require a system to have relief valves under the following circumstances:

- If the unit is greater than a certain tonnage.
- If the amount of refrigerant exceeds specified minimums.
- If the internal volume is large enough.

Relief valves should be inspected every six to twelve months and replaced every five years. Take the appropriate corrective action if any of the following conditions are discovered during inspection:

- Missing or broken seal wires. Missing or broken seal wires indicate that a relief valve has been tampered with. Replace any relief valve with a missing or broken seal wire.
- Corrosion. Corrosion can prevent a relief valve from operating properly. Replace any valve showing signs of corrosion.
- Leakage. Replace any relief valve showing signs of leakage.

Copyright Goodheart-Willcox Co., Inc.

- Proper nameplate. The size, pressure limit, date of manufacture, and discharge capacity of a relief valve should be clearly visible.
- Stacked spring-loaded relief valves. Stacking is the addition of a second spring-loaded relief valve to the outlet of an existing spring-loaded relief valve that is leaking. Stacking spring-loaded relief valves is a common maintenance error.
- Dirt or debris in the purge line. Check a relief valve's purge line to see if rainwater or other foreign materials can be allowed in. Any dirt or debris can interfere with relief valve operation. Also, purge lines should discharge refrigerant at least 15′ above ground level and at least 20′ from any door, window, or ventilation opening. Correct any problems found with the purge line.

Relief valves should be replaced after they have discharged or vented. Even spring-loaded relief valves, which close after they have vented, must be replaced because debris can get caught on the valve seat, preventing a proper seal. This can lead to venting at pressures considerably lower than the relief valve's rated pressure. Even if a valve never discharges, it should still be replaced every five years to ensure proper operation. Replacement schedules may vary depending on applicable codes.

Code Alert

Spring-Loaded Relief Valves

Stacking spring-loaded relief valves is not permissible by code. Stacked valves add back pressure above the first relief valve piston, affecting the valves' pressure settings. The criteria for selecting and installing relief valves are described in ANSI/ASHRAE Standard 15, *Safety Code for Mechanical Refrigeration*.

Pro Tip

Relief Valve Sizing

In general, a relief valve should be sized to vent at a pressure no less than 25% above the maximum system operating pressure. It must also be sized to release refrigerant at the proper rate. Relief valve flow capacities are rated in pounds of refrigerant per minute (lb/min).

There are three principal types of relief valves:

- Fusible plug.
- Spring-loaded relief valve.
- Rupture disc.

Fusible Plugs

A *fusible plug* is a relief valve that consists of a threaded plug with a metal core that melts at a much lower temperature than the outer shell. In case of a fire or extremely high operating temperatures, the metal core melts and allows refrigerant in the system to escape before it reaches a dangerously high pressure. A flare fitting at the end of the fusible plug is used to connect to the purge line, which carries the released refrigerant outdoors, **Figure 22-34**.

Pro Tip

Fusible Plug Considerations

When a fusible plug fails, it releases a system's entire refrigerant charge. Fusible plugs are also prone to failure due to age or prolonged exposure to elevated temperatures and must be replaced regularly to ensure proper operation. Because of these drawbacks, spring-loaded relief valves have replaced fusible plugs in many applications.

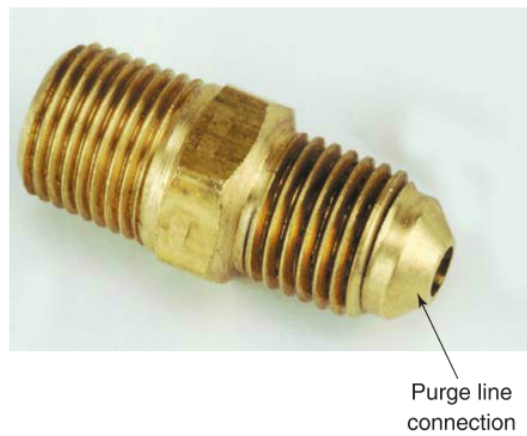

Fusible Plug

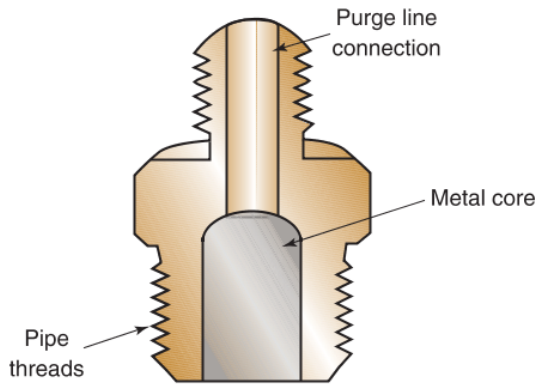

Cross Section of Fusible Plug

Mueller Industries, Inc.

Figure 22-34. Fusible plugs are often installed on liquid receivers. The smaller threaded fitting connects to the purge line.

Copyright Goodheart-Willcox Co., Inc.

Spring-Loaded Relief Valves

A ***spring-loaded relief valve*** vents refrigerant under excessive pressure and then closes when enough refrigerant has been released from the system to lower the pressure. When the system pressure overcomes the pressure of the spring inside the valve, the piston and valve disc are pushed away from the valve seat. Refrigerant passes around the valve disc and escapes through the hole in the adjusting gland. When the system pressure drops back to a safe level, the spring pushes the piston and valve disc back into their original positions, reseating the valve and preventing more refrigerant from escaping, **Figure 22-35**.

The opening pressure of a spring-loaded relief valve is calibrated by the manufacturer by changing the position of the adjusting gland. However, once the valve's opening pressure is set, the valve is sealed to prevent tampering. A spring-loaded relief valve's pressure setting cannot be adjusted in the field. If the seal is broken, the valve should be replaced with a correctly adjusted and sealed valve, **Figure 22-36**.

Spring-loaded relief valves usually close at 10% to 20% below their opening pressure. Since spring-loaded relief valves are safety devices, it is absolutely critical that the proper valve be installed. Note that a valve's specifications are stamped on the side of the valve body. Refer to **Figure 22-36**.

Rupture Discs

A ***rupture disc*** consists of a valve body containing a thin metal disc that bursts before the pressure in a system reaches dangerous levels. Rupture disc valve bodies generally have a threaded port for permanently installing a pressure gauge. The gauge port is sealed off from the system pressure unless the disc ruptures. If the gauge displays high pressure, the rupture disc has burst and must be replaced, **Figure 22-37**.

Rupture discs are typically installed between a system and a spring-loaded relief valve. The rupture disc blocks refrigerant from reaching the relief valve under normal operating conditions. This eliminates the possibility of small amounts of refrigerant leaking out through the relief valve during normal system operation. However, if the system pressure exceeds the maximum allowable limit, the rupture disc bursts to expose the relief valve to system pressure. The spring-loaded relief valve will then vent refrigerant to bring the system pressure back into the allowable range and will reseal once the pressure has been reduced. With the rupture disc burst, the pressure gauge will show the pressure reading. This indicates to the technician the rupture disc has burst, and the system may have lost some of its charge to venting.

Some manufacturers have integrated rupture discs into their spring-loaded relief valves to prevent potential leakage at the valve seat. These relief valves also contain a filter trap that collects the fragments of the disc if it ruptures.

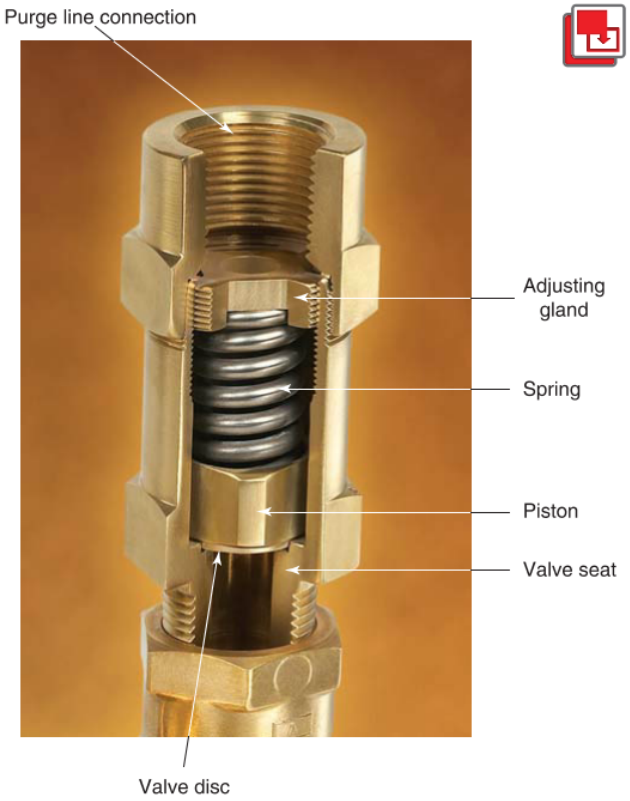

Sherwood Valve

Figure 22-35. Cutaway of a spring-loaded relief valve.

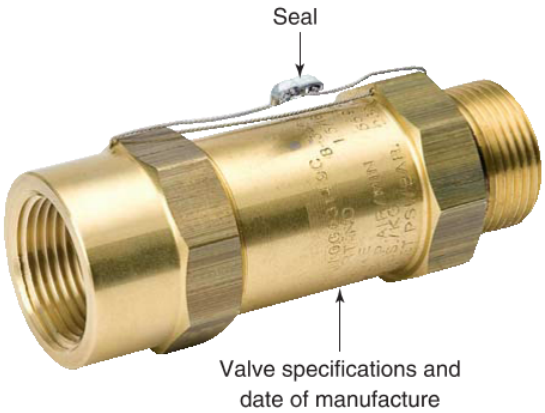

Mueller Industries, Inc.

Figure 22-36. After a spring-loaded relief valve has been calibrated by the manufacturer, a seal is placed on it to prevent tampering.

Copyright Goodheart-Willcox Co., Inc.

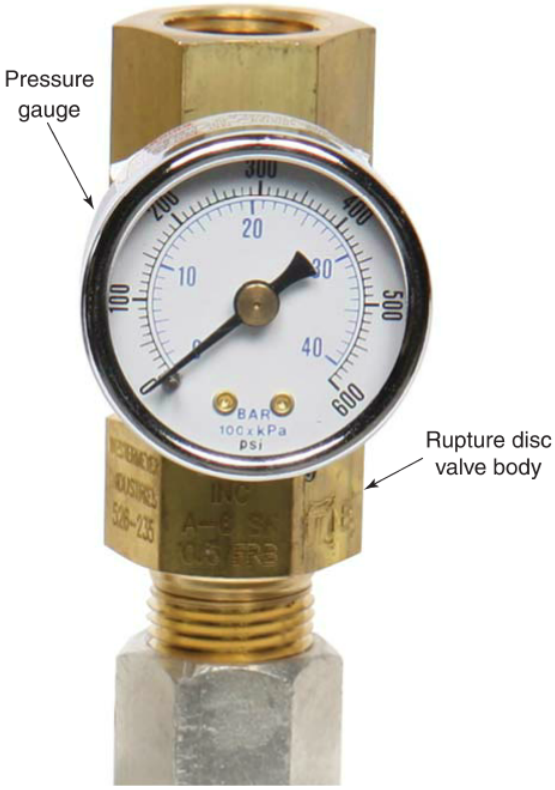

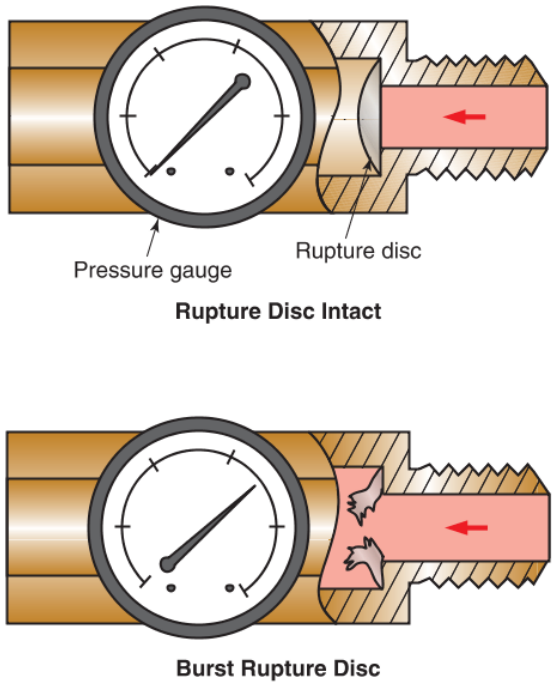

Westermeyer Industries, Inc.; Goodheart-Willcox Publisher

Figure 22-37. Rupture discs are typically equipped with a pressure gauge and installed before a spring-loaded relief valve.

22.5 Head Pressure Control Valves

Another group of pressure-regulating valves are head pressure control valves. These valves work together to control head pressure during periods of low ambient temperature. A commercial refrigeration system with an outdoor, air-cooled condenser operating in cold temperature often needs some form of head pressure control. There are numerous methods of controlling head pressure. Some of the more common methods use pressure-regulating valves. Two popular options include using a condenser pressure regulator and a receiver pressure regulator or using a low ambient control, which is a valve that performs the functions of both condenser pressure regulator and receiver pressure regulator. More information on other methods of head pressure control can be found in Chapter 21, *Heat Exchangers*.

Many HVACR systems use air-cooled condensers. These condensers are subject to the temperature and humidity of the outdoors. Low ambient temperature can reduce head pressure. In extreme cases, this reduced head pressure can stop the flow of refrigerant through the system. This is especially critical for commercial refrigeration systems that operate year-round and must function through a cold season. Several different methods are available that can maintain head pressure:

- Flooding the condenser with liquid refrigerant by using pressure-regulating valves.
- Flooding the condenser with liquid refrigerant by using a reduced condenser volume (condenser splitting).
- Partially or completely closing an air-cooled condenser's louvers.
- Stopping, slowing, or cycling off an air-cooled condenser's fans.
- Heating the condenser or liquid receiver.

This chapter will cover methods of head pressure control that regulate the flow and pressure of refrigerant through the high side of the system. Other methods of head pressure control, such as opening and closing air louvers, controlling fan speed and cycling, and heating the condenser or liquid receiver, are covered in Chapter 21, *Heat Exchangers*.

Copyright Goodheart-Willcox Co., Inc.

22.5.1 Head Pressure Control—Pressure-Regulating Valves

The main concern with refrigeration systems with outdoor condensers is keeping the TXV operating at full capacity during cold weather. Refrigeration systems operate on the relationships of temperature and pressure. Refrigerant flow capacity depends on the pressure difference across the TXV. If the condensing pressure for R-134a reduces from 104 psi at 90°F (32°C) to 26 psi at 30°F (–1°C), the TXV capacity will drop. This capacity drop occurs because the temperature and pressure of the condenser will be much closer to evaporator temperature and pressure than during warm weather. It will be much more difficult for this lower high-side pressure to overcome the force of the TXV's adjustment spring and low-side pressure. This much smaller pressure difference means that not enough liquid refrigerant will be flowing into the evaporator. Also, a small pressure difference across the TXV may cause the compressor to short cycle.

Condenser and Receiver Pressure Regulator Valves

For outdoor air-cooled condensers, condensing temperatures and pressures may be raised back to proper operating levels by employing certain pressure-responsive valves, such as condenser pressure regulators and receiver pressure regulators, **Figure 22-38**.

A ***condenser pressure regulator*** is an ***open on rise of inlet pressure (ORI) valve*** that opens on a rise of inlet pressure. It opens when condenser pressure rises to a proper level and closes to block the flow of refrigerant from the condenser to the liquid receiver when condenser pressure drops too low, **Figure 22-38**.

The condenser pressure regulator closes when condenser pressure is less than the pressure exerted by the regulator's adjustable spring. With the condenser pressure regulator closed, the compressor continues to pump refrigerant into the condenser, causing condenser pressure to rise. Condenser pressure regulators often look and operate similarly to evaporator pressure regulators, **Figure 22-39**.

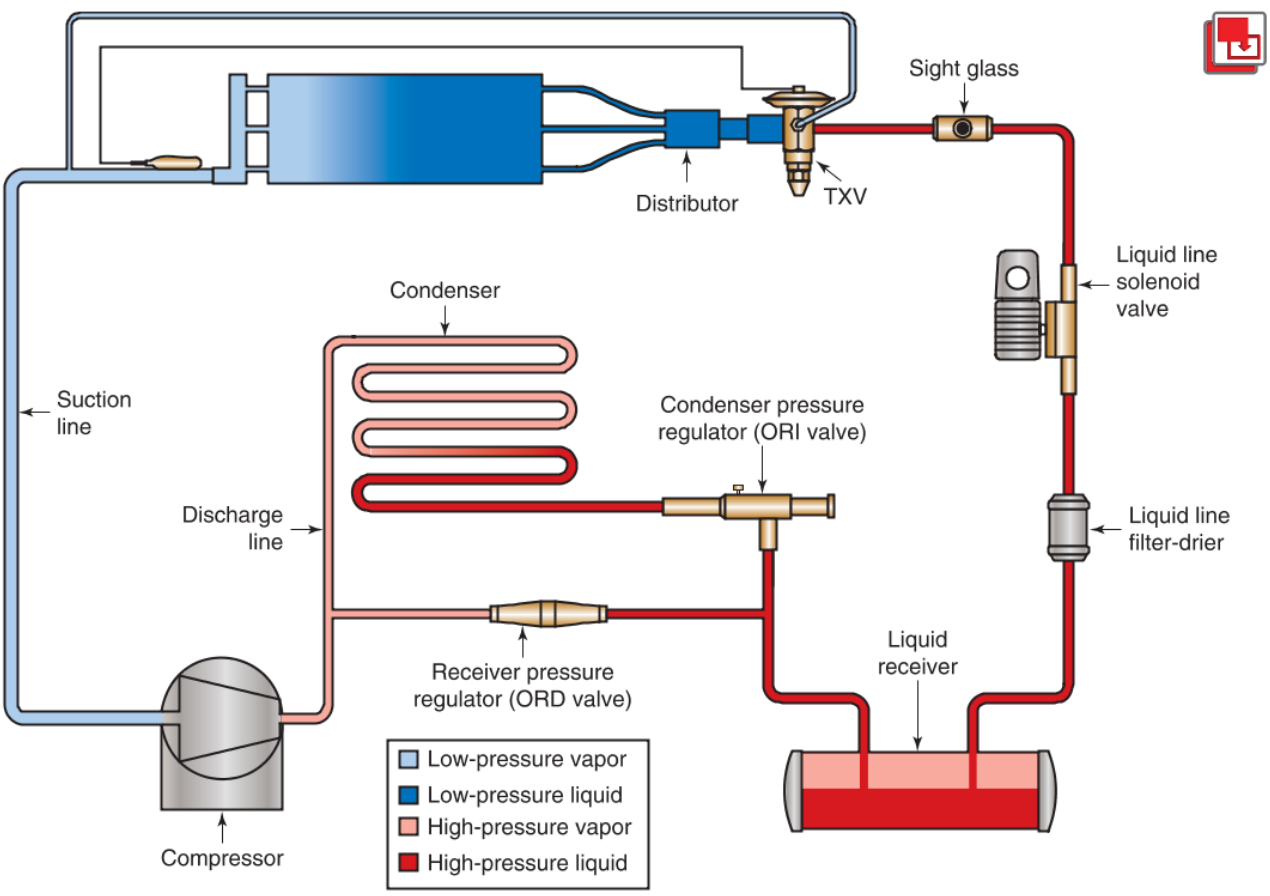

Courtesy of Sporlan Division - Parker Hannifin Corporation

Figure 22-38. Diagram of a system with an outdoor condensing unit showing a condenser pressure regulator (ORI valve) and receiver pressure regulator (ORD valve). These devices are used to ensure proper head pressure during cold weather.

Copyright Goodheart-Willcox Co., Inc.

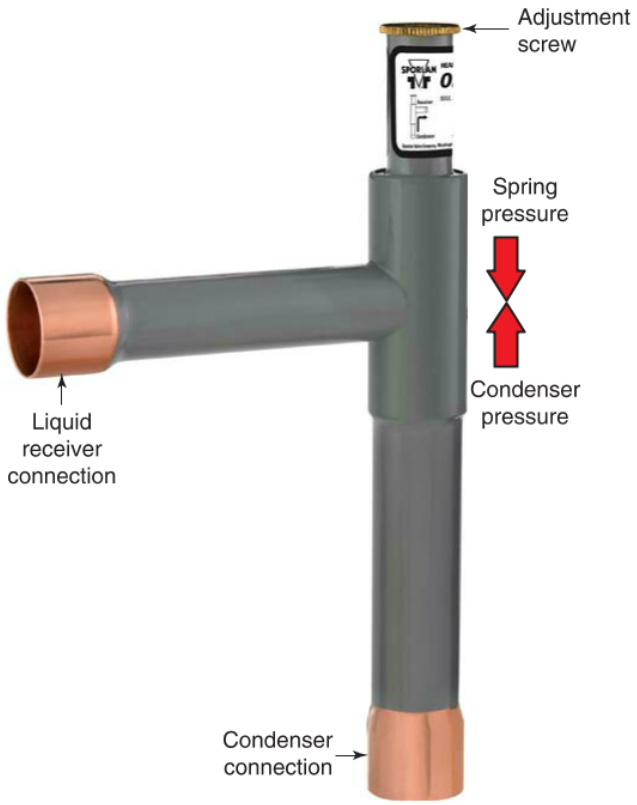

Courtesy of Sporlan Division - Parker Hannifin Corporation

Figure 22-39. Review manufacturer literature before installing and calibrating condenser pressure regulators.

A ***receiver pressure regulator*** is an ***open on rise of differential pressure (ORD) valve*** that allows hot-gas refrigerant from the compressor discharge line to bypass the condenser and directly enter the liquid receiver when a certain pressure difference occurs between the discharge line and the liquid receiver. The heat and pressure of the discharge gas raises the pressure in the liquid receiver, **Figure 22-40**. The pressure difference setting is usually between 20 and 30 psi.

Outdoor air-cooled condensers are designed so that their tubes fill nearly full with liquid refrigerant during low-temperature conditions. Just enough condenser surface is available to maintain proper pressure. During low ambient conditions, pressure may drop too low. When condenser pressure decreases too low, the condenser pressure regulator at the outlet of the condenser closes. With its outlet closed, the condenser then begins to fill with liquid refrigerant. As more liquid than usual is occupying the condenser, less condenser surface is available for the vapor refrigerant. Having less condenser surface available makes it more difficult for vapor refrigerant to release its heat through the condenser and into ambient air. With less heat being released from the condenser, condenser temperature rises. According to Gay-Lussac's law, when the temperature of a substance within a constant volume rises, pressure also rises. When condenser pressure rises high enough, the condenser pressure regulator opens.

Remember that the problem with outdoor, air-cooled condensers is that cold outdoor air can cause head pressure to drop very low. This reduces the pressure difference between the high and low sides across the TXV. With a reduced pressure difference, refrigerant flow from high to low sides is severely reduced. Condenser pressure regulators and receiver pressure regulators are used to raise head pressure and increase the pressure difference between the high and low sides of the system.

Head pressure can be raised back to proper operating levels using a receiver pressure regulator. As condenser pressure drops, the condenser pressure

Danfoss

Figure 22-40. Receiver pressure regulators are designed to allow flow in only one direction. Review product literature before installing.

Copyright Goodheart-Willcox Co., Inc.

regulator begins to close. While it is closing, the TXV is still open and allowing liquid refrigerant to pass to the low side of the system. When a condenser pressure regulator begins to close, less refrigerant is being fed into the liquid receiver than is being passed through the TXV into the evaporator. This creates a pressure drop in the liquid receiver.

While this is happening, the path between the condenser and the liquid receiver is blocked by the closed condenser pressure regulator. Therefore, pressure no longer exists between the condenser and liquid receiver. Instead, pressure is between the discharge line of the compressor and the liquid receiver through the receiver pressure regulator. As seen in **Figure 22-38**, the inlet of the receiver pressure regulator is connected to the discharge line from the compressor, and the outlet of the receiver pressure regulator is connected to the liquid receiver.

When the condenser pressure regulator closes, pressure in the liquid receiver will begin to drop. This pressure drop results from two causes. Firstly, the condenser pressure regulator has shut off flow into the liquid receiver, so head pressure is no longer sustaining liquid receiver head pressure. Secondly, the TXV is still feeding refrigerant liquid into the evaporator, which reduces the amount of refrigerant in the liquid receiver and reduces its pressure. The receiver pressure regulator senses this lower pressure at its outlet as compared to the high pressure at its inlet from the discharge line. Once a certain pressure difference is sensed (usually around 20 psi), the receiver pressure regulator opens. This feeds hot, high-pressure refrigerant vapor from the compressor into the liquid receiver. This will raise the temperature and the pressure in the liquid receiver, keeping pressure high enough for the TXV to continue feeding refrigerant into the evaporator.

If the receiver pressure regulator does not open at the specified pressure difference, the pressure in the receiver would drop so low that the TXV would begin to close, reducing the flow of refrigerant and starving the evaporator.

The condenser pressure regulator and receiver pressure regulator work together to maintain head pressure on the high side of the system in low outdoor temperature. The condenser pressure regulator raises condenser pressure to raise head pressure, and the receiver pressure regulator raises liquid receiver pressure to raise head pressure. Keeping head pressure at proper levels maintains a proper flow of liquid refrigerant into the evaporator. A drop in head pressure could result in a ***starved evaporator*** condition, where not enough refrigerant flows into the evaporator and subcooling and superheat are too high.

Pro Tip

Head Pressure Valve Names

Refrigeration systems use numerous valves in a variety of ways. Valves can be named after the way they operate, the types of components they include, or their function in a system. Often, knowing a valve's function in a system and how it operates is more important than knowing every name it is called.

Condenser pressure regulators are named after their function, as they *regulate* and respond to the *pressure* of *condensers*. In regulating condenser pressure, they also regulate *head pressure*. For that reason, they can also be called *ORI head pressure regulators*, as they operate as ORI valves (*open* on a *rise* of *inlet* pressure) and function to regulate *head pressure*. Other names include *condenser holdback valve*, *holdback pressure valve*, *head pressure control valve*, and *limiter valve*.

Receiver pressure regulators also have several names based on operation and function. They function to regulate receiver pressure and respond by opening to a rise in pressure difference (ORD) between a discharge line and a liquid receiver. Some other names for receiver pressure regulators include *discharge vapor bypass valve*, *condenser bypass valve*, *ORD head pressure regulator*, and *hot-gas condenser bypass valve*.

7

Low-Ambient Control (LAC) Valve

While some refrigeration systems with outdoor condensers solve the problem of head pressure control using a condenser pressure regulator and a receiver pressure regulator, other systems use a single control device. ***Low-ambient control (LAC)*** is a combination condenser-receiver pressure regulator, which is a single valve body that regulates both condenser and liquid receiver pressures, **Figure 22-41**.

Low-ambient control closes the condenser outlet when head pressure drops too low and bypasses compressor discharge gas into the liquid receiver at the same time. This dual action raises low condenser pressure and keeps liquid receiver pressure from dropping simultaneously. Systems using low-ambient control operate the same as those with individual condenser pressure regulators and receiver pressure regulators, **Figure 22-42**.

Pro Tip

Combination Valve Names

Low-ambient control (LAC) may also be called *combination condenser-receiver pressure regulator*, *combination ORI/ORD valves*, *combination head pressure control*, or *low-ambient control (LAC) valves*.

Copyright Goodheart-Willcox Co., Inc.

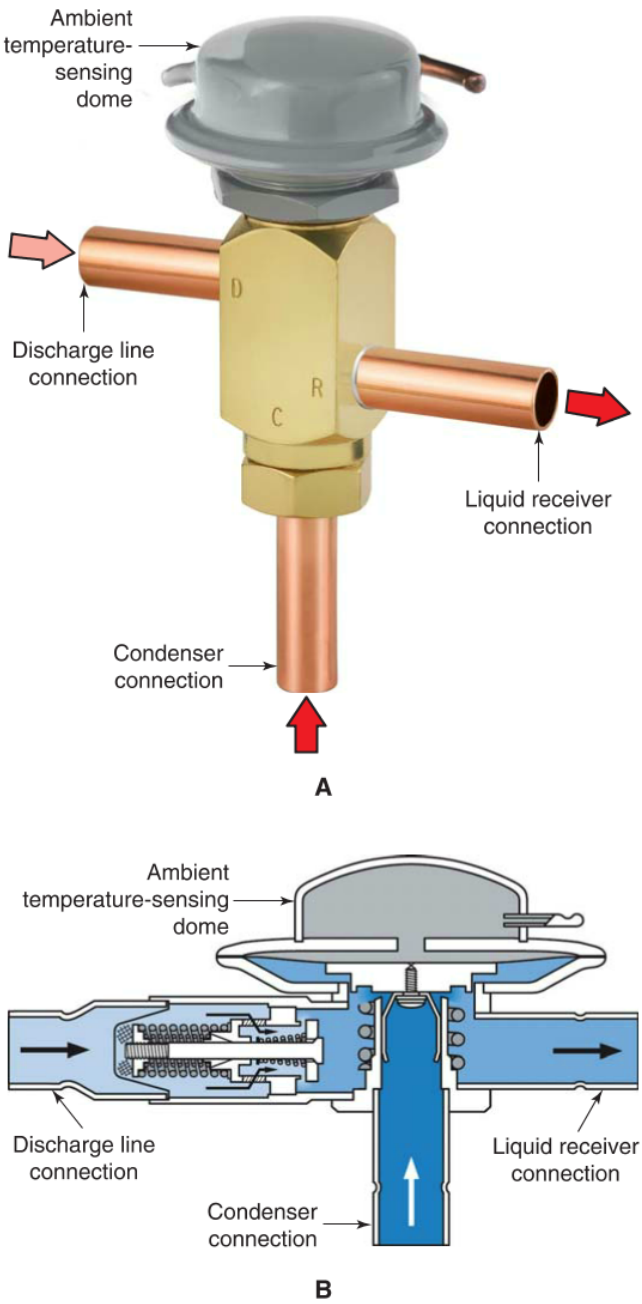

Courtesy of Sporlan Division - Parker Hannifin Corporation

Figure 22-41. Low-ambient control (LAC) modulates its two inputs and one output using two springs and an ambient temperature-sensing dome.

Specifications must be carefully followed when installing outdoor, air-cooled condenser systems. The valves controlling the flow of bypass gasses and the flow of liquid refrigerant from the condenser must be sized to the capacity of the system. Also, the liquid receiver must hold enough liquid refrigerant to flood most of the condenser in the winter. It must also safely hold the refrigerant during the warm season. The refrigeration system usually is charged with twice as much refrigerant as would be needed without the condenser flooding feature. Year-round operation requires a liquid receiver with capacity to store all the extra refrigerant during the summer.

In low-ambient conditions, small amounts of liquid refrigerant may accumulate in the compressor during the Off cycle. A trap may be needed in the compressor discharge line to prevent the liquid from flowing back into the compressor.

During a period of low-ambient temperature, all of a system's refrigerant may transfer to the condenser. This occurs because it will then be the coldest part of the system. An inverted trap may be necessary at the condenser outlet to prevent liquid refrigerant from flowing back out of the liquid receiver and flooding the condenser. A more effective alternative is installing a check valve between the low-ambient control and liquid receiver. This prevents the flow of refrigerant from the liquid receiver into the cold condenser.

22.5.2 Head Pressure Control—Condenser Splitting

Another method of maintaining head pressure in low-ambient conditions is to flood the condenser by splitting off and isolating part of its volume. ***Condenser splitting*** is a method of head pressure control in low-ambient conditions in which a condenser is divided into two separate spaces. One space is evacuated and isolated from the system. It is only used in warm weather. This condenser space used only during warm weather is often called the ***summer condenser***. The flooded condenser space is used year-round in all weather conditions. The condenser space that is used year-round is often called the ***summer/winter condenser***, **Figure 22-43A**.

In warm weather, a split condenser valve feeds refrigerant into both condenser spaces. The two condensers are arranged in parallel, **Figure 22-43B**. The combined large volume of both condenser spaces is necessary to maintain a proper head pressure and displace the heat load.

A split condenser has two separated condenser volumes that are fed by a three-way solenoid valve in the discharge line called a ***split condenser valve***, **Figure 22-44**. A split condenser valve responds to controls sensing ambient conditions or high-side pressure. It has two valve positions. When de-energized, the valve's seat is in the up position, which allows discharge refrigerant to flow evenly divided between

Copyright Goodheart-Willcox Co., Inc.

the two condenser volumes. When energized, the pilot valve opens to allow discharge pressure to push the valve seat closed. This blocks off the discharge line's passage to the summer condenser. Therefore, the split condenser valve's outlet to the summer/winter condenser is always open, but the outlet to the summer condenser is either open or closed.

In cool weather, the temperature difference between ambient air and condenser temperature is greater than in warm weather. Therefore, heat transfer occurs more quickly and efficiently. In cold weather, this benefit of a large temperature difference for efficient heat transfer becomes a problem, as it reduces head pressure too low.

TXVs require head pressure in the liquid line to be high enough to overcome the TXV's adjustment spring to enter the evaporator. However, low-ambient conditions decrease head pressure so much that very little refrigerant is fed into the evaporator. This starving of the evaporator reduces compressor capacity. To increase the amount of refrigerant that the TXV can feed into the evaporator, head pressure must be increased. One method of increasing head pressure is to raise condenser temperature by reducing the amount of heat expelled from the condenser. According to Gay-Lussac's law, in a fixed volume, the higher a gas's temperature, the higher its pressure.

To increase head pressure, the split condenser valve responds to a control set at a predetermined threshold (low temperature or low pressure) and closes the passage to the summer condenser. With half as much condenser space as previously, liquid refrigerant floods the summer/winter condenser and head pressure increases. The smaller volume of only the summer/winter condenser is sufficient to displace the heat load in cool weather when the temperature difference is greater and heat transfer occurs more easily.

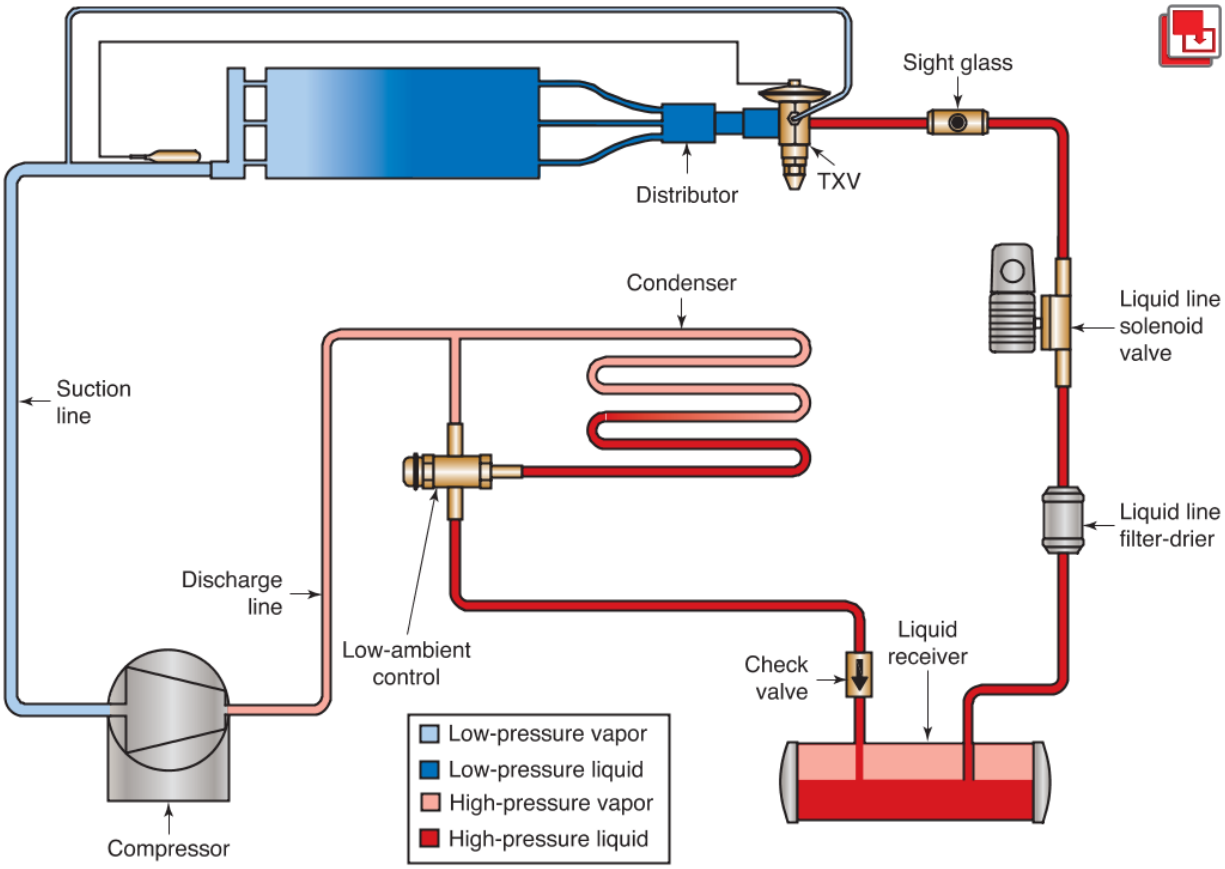

Courtesy of Sporlan Division - Parker Hannifin Corporation

Figure 22-42. In this outdoor, air-cooled condenser system, head pressure control is regulated by low-ambient control (LAC), a combination condenser-receiver pressure regulator. When condenser pressure is high enough to keep head pressure up, the discharge bypass line is closed, and the TXV is feeding liquid refrigerant into the evaporator.

Copyright Goodheart-Willcox Co., Inc.

Split condenser systems include a check valve in the outlet of the summer condenser to prevent any refrigerant from backflowing while the summer condenser is not in use. In cold weather, many installations reclaim the refrigerant from the summer condenser through a bypass bleeder line into the low side of the system, as shown in **Figure 22-43A**. While the split condenser valve has closed off the summer condenser to the discharge line, it has opened a small passage to the bypass bleeder line. This allows the refrigerant in the summer condenser to slowly flow back into circulation through the low-pressure suction line.

Another method of reclaiming refrigerant in the summer condenser during cold weather is through a

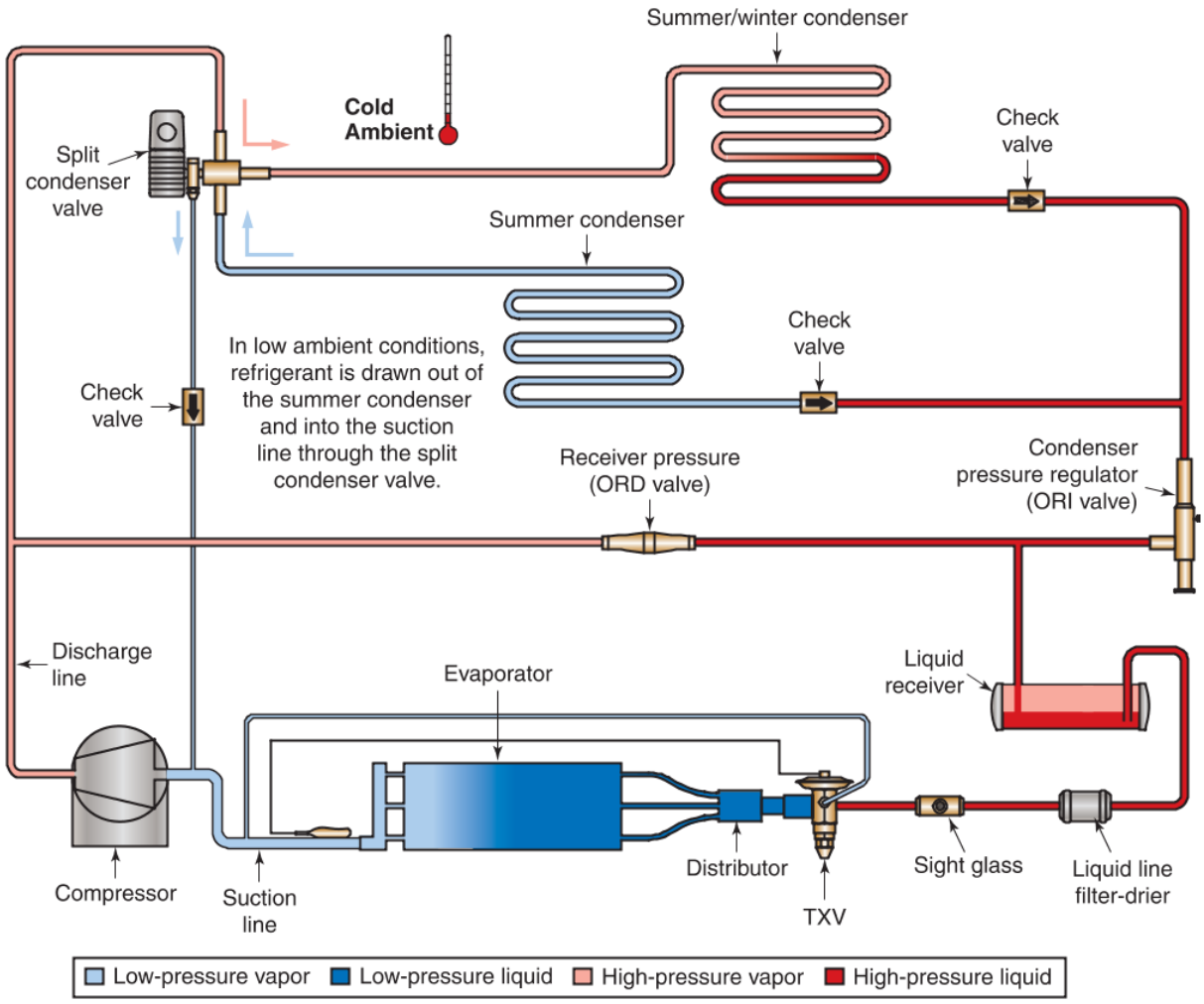

A

Courtesy of Sporlan Division - Parker Hannifin Corporation

Figure 22-43. A split condenser system includes two condensers: a summer condenser and a summer/winter condenser. A—During cold weather, the split condenser valve in the discharge line directs hot-gas refrigerant only into the summer/winter condenser. B—During warm weather, both condensers are used to displace heat from the system.

Copyright Goodheart-Willcox Co., Inc.

solenoid valve-controlled bleeder line that runs from the outlet of the summer condenser to the suction line or suction header. This method includes a check valve in the bleeder line to prevent refrigerant from backflowing.

An alternative to using a split condenser valve is to install parallel piping to the two condenser spaces and include a solenoid valve before the summer condenser and a check in its outlet piping. Use a thermostat or low-pressure switch to control the opening and closing of the solenoid valve.

An advantage of condenser splitting head pressure control is that it requires much less refrigerant to flood the condenser in use than the amount of refrigerant

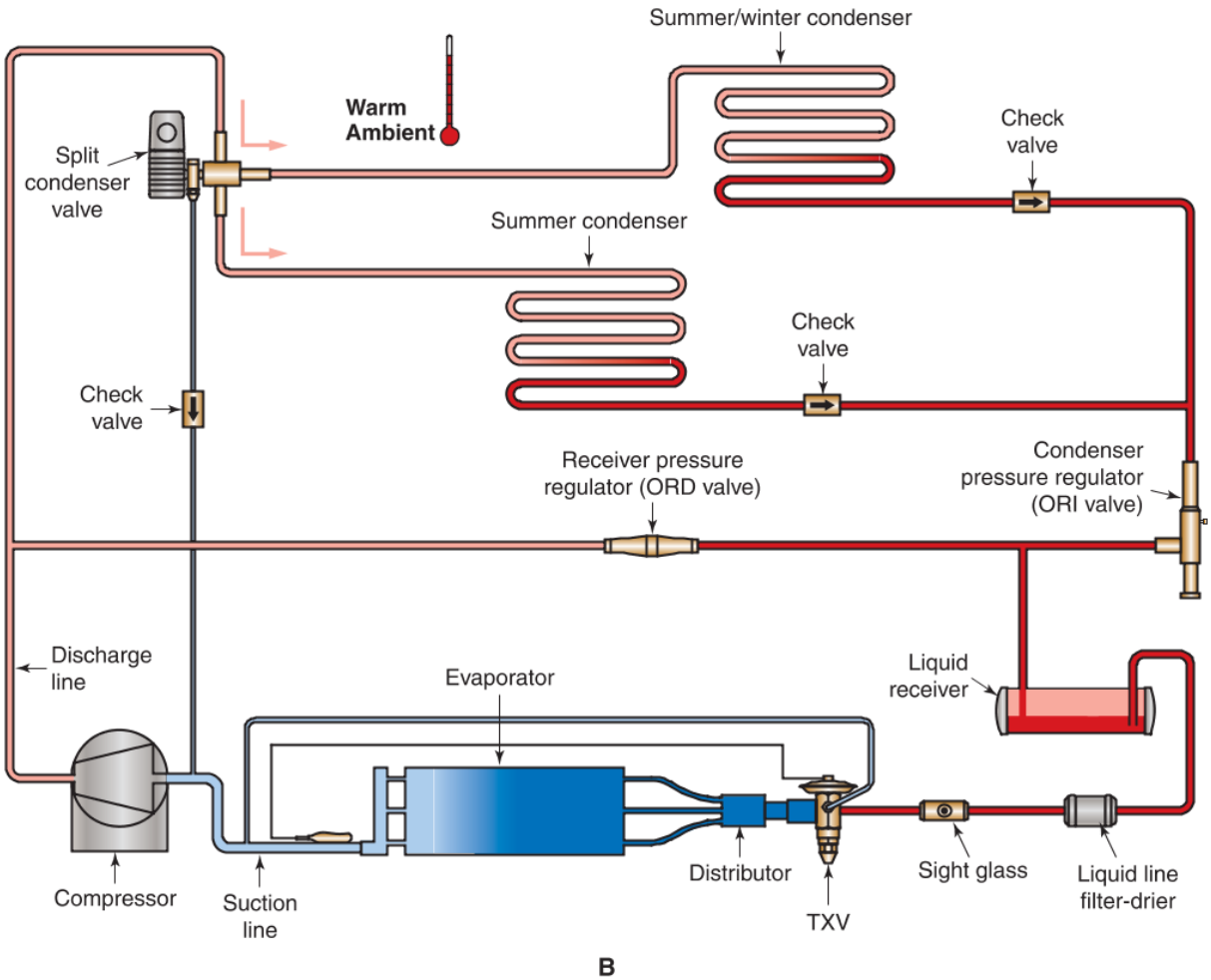

Figure 22-43. *Continued*

Copyright Goodheart-Willcox Co., Inc.

used to flood a condenser using pressure-regulating valves. In large systems, this can equate to more than 100 pounds of refrigerant. Using this much less refrigerant can be a significant cost reduction in supermarkets and other large refrigeration systems.

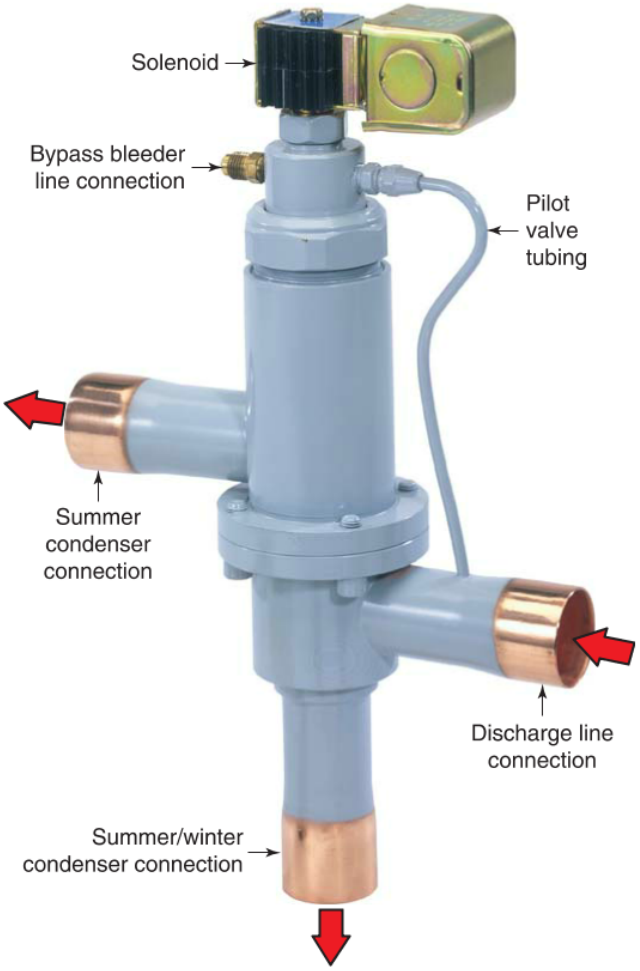

Courtesy of Sporlan Division - Parker Hannifin Corporation

Figure 22-44. Three-way solenoid valve (split condenser valve) distributes the hot-gas refrigerant from the compressor discharge line into one or both of the condenser spaces, depending on ambient temperature.

Copyright Goodheart-Willcox Co., Inc.

Chapter Review

Summary

- The basic refrigeration loop consists of the compressor, condenser, metering device, and evaporator. As an HVACR system is designed to achieve more specific requirements, more control components are added.
- The two primary functions that refrigerant loop components must achieve are the control of refrigerant flow and the maintenance of proper refrigerant quantity and quality in the system.
- A suction line filter-drier prevents foreign particles and moisture from entering the compressor. Filters capture foreign materials, while driers adsorb moisture to prevent the formation of acids in the system.
- Liquid line filter-driers are installed between the liquid receiver (or condenser if the system does not include a liquid receiver) and the metering device.
- A moisture indicator changes color based on the moisture content of the refrigerant.
- Refrigerant flow valves are used to regulate the flow of refrigerant for different purposes. Refrigerant line valves are manual valves that control the flow of refrigerant through system piping. Shutoff valves are manual valves that are often installed on manifolds to allow individual evaporators to be isolated. Service valves are manual valves that provide a connection to a system so that technicians can take pressure readings, charge the system, or evacuate the system. Check valves allow refrigerant to flow in only one direction through a passage.
- Solenoid valves change valve position based on electrical signals. They may be two-way (shutoff) valves, three-way (bypass) valves, or four-way (reversing) valves.
- A hot-gas defrost valve directs vapor refrigerant from the compressor discharge line through an evaporator for quick defrosting. A hot-gas bypass valve directs vapor refrigerant to the low side for capacity control to alleviate low load conditions.
- A liquid injection valve mixes liquid refrigerant from the liquid line with bypassed hot gas to desuperheat the hot gas.
- Pressure-regulating valves control refrigerant flow to maintain a steady pressure in part of the system. A crankcase pressure regulator (CPR) limits the pressure in the compressor crankcase.
- An evaporator pressure regulator (EPR) restricts the flow of refrigerant coming out of the evaporator in order to maintain a set minimum pressure (and temperature) in the evaporator while the refrigeration system is operating.
- Electric evaporator pressure regulators (EEPRs) react to evaporator temperature by proportionally modulating their valves to various positions, ranging from closed to open.
- Relief valves vent refrigerant to prevent dangerously high pressure from building in a system. A fusible plug is a relief valve with a metal core that melts at elevated temperatures. A rupture disc is a relief valve with a thin metal disc that bursts before system pressure reaches a dangerous level. A spring-loaded relief valve vents refrigerant under excessive pressure and then closes when enough refrigerant has been released to lower the pressure.
- Commercial refrigeration systems that operate during a cold season require some form of head pressure control to maintain high enough pressure difference for continued refrigerant flow. This can be accomplished by splitting the condenser or using pressure-regulating valves.
- A condenser pressure regulator is an open on rise of inlet pressure (ORI) valve located at the outlet of a condenser that opens when condenser pressure is high enough and closes when condenser pressure drops too low. By closing, it allows condenser pressure to increase.
- A receiver pressure regulator is an open on rise of differential pressure (ORD) valve located between the discharge line and liquid receiver. When it senses a drop in liquid receiver pressure, it allows hot-gas refrigerant into the liquid receiver to increase head pressure.
- A low-ambient control is a combination condenser-receiver pressure regulator that performs as both condenser pressure regulator and receiver pressure regulator.
- Condenser splitting increases head pressure in low-ambient conditions by circulating high-side refrigerant through only half of the combined condenser volume.

Copyright Goodheart-Willcox Co., Inc.

Review Questions

Answer the following questions using the information in this chapter.

1. A measurable pressure drop between the evaporator outlet and compressor inlet may indicate that the _____ should be replaced.
   A. liquid line filter-drier
   B. liquid receiver
   C. sight glass
   D. suction line filter-drier
2. Large systems store liquid refrigerant on the high side in the _____.
   A. liquid line filter-drier
   B. liquid receiver
   C. sight glass
   D. suction line filter-drier
3. The best place to install a sight glass is _____.
   A. between the metering device and distributor
   B. in the discharge line
   C. just after the liquid line filter-drier
   D. just after the suction line filter-drier
4. A riser valve is a valve installed _____.
   A. in the compressor discharge line
   B. in a length of vertical refrigerant line
   C. on the condenser
   D. in a liquid line manifold
5. Which of the following statements regarding service valves is *not* true?
   A. Service valves are fastened to tubing using soldered connections.
   B. Service valves provide access for taking pressure readings.
   C. Many systems have a service valve at the outlet of the liquid receiver.
   D. Many service valve stems must be turned using a refrigeration service valve wrench.
6. A check valve might be used _____.
   A. to allow refrigerant to bypass one of two metering devices in a heat pump system
   B. in multiple-evaporator systems to prevent refrigerant from warmer evaporators from backing up into colder evaporators
   C. to prevent unwanted refrigerant migration during the Off cycle of large commercial systems
   D. All of the above.
7. In a multiple-evaporator system, a check valve is installed at the _____.
   A. compressor inlet
   B. condenser inlet
   C. outlet of the warmest evaporator
   D. outlet of the coldest evaporator
8. A solenoid valve that opens a small valve that directs pressure to open and close a larger valve is _____.
   A. direct-acting
   B. normally closed
   C. pilot-operated
   D. All of the above.
9. Ice accumulation on an evaporator can be quickly melted by automatically opening a system's _____.
   A. hot-gas defrost valve
   B. liquid receiver
   C. manifold valve
   D. moisture indicator
10. A _____ valve alleviates low pressure and temperature conditions by diverting some refrigerant vapor from the compressor discharge directly to the low side.
    A. desuperheater
    B. hot-gas bypass
    C. relief
    D. riser
11. A hot-gas bypass valve directs hot-gas refrigerant from the discharge line to the _____.
    A. condenser
    B. liquid line
    C. liquid receiver
    D. low side of the system
12. A _____ is used to desuperheat hot-gas vapor from the discharge line.
    A. condenser pressure regulator
    B. crankcase pressure regulator
    C. liquid injection valve
    D. low-ambient control
13. The purpose of a crankcase pressure regulator is to _____.
    A. ensure that compressor discharge pressure is sufficiently high
    B. increase liquid line pressure in low-ambient conditions
    C. maintain a sufficiently low pressure in the compressor
    D. show the flow of liquid refrigerant

Copyright Goodheart-Willcox Co., Inc.

14. A commercial refrigeration system with a single suction line and multiple evaporators can maintain a different temperature at each evaporator by controlling and differing _____.
    A. crankcase pressure
    B. evaporator pressure
    C. head pressure
    D. liquid line temperature
15. The purpose of an evaporator pressure regulator is to _____.
    A. bypass liquid line refrigerant around the metering device
    B. control evaporator temperature by controlling its pressure
    C. isolate parts of the system for service
    D. shut off the compressor if evaporator pressure gets too high
16. Which of the following relief valves is designed to vent refrigerant under excessive pressure and then close when the system pressure has been lowered?
    A. Fusible plug.
    B. Manifold valve.
    C. Rupture disc.
    D. Spring-loaded relief valve.
17. Which of the following statements regarding relief valves is *not* true?
    A. A blown fusible plug must be replaced.
    B. Relief valves should be replaced every five years.
    C. Relief valves should be vented to the outdoors using a purge line.
    D. Spring-loaded relief valves should be stacked to prevent any leakage.
18. A device that opens when condenser pressure rises to a proper level and closes to block the flow of refrigerant from the condenser to the liquid receiver when condenser pressure drops too low is a _____.
    A. condenser pressure regulator
    B. crankcase pressure regulator
    C. receiver pressure regulator
    D. split condenser valve
19. A device that allows hot refrigerant vapor from the compressor discharge line to bypass the condenser and directly enter the liquid receiver when a certain pressure difference occurs between the discharge line and the liquid receiver is a _____.
    A. condenser pressure regulator
    B. crankcase pressure regulator
    C. receiver pressure regulator
    D. split condenser valve
20. A method of head pressure control in low-ambient conditions in which a condenser is divided into two separate spaces (one space flooded, the other isolated) is called _____.
    A. combined flow
    B. condenser splitting
    C. counterflow
    D. drift

Copyright Goodheart-Willcox Co., Inc.

CHAPTER 23 Overview of Domestic Refrigerators and Freezers

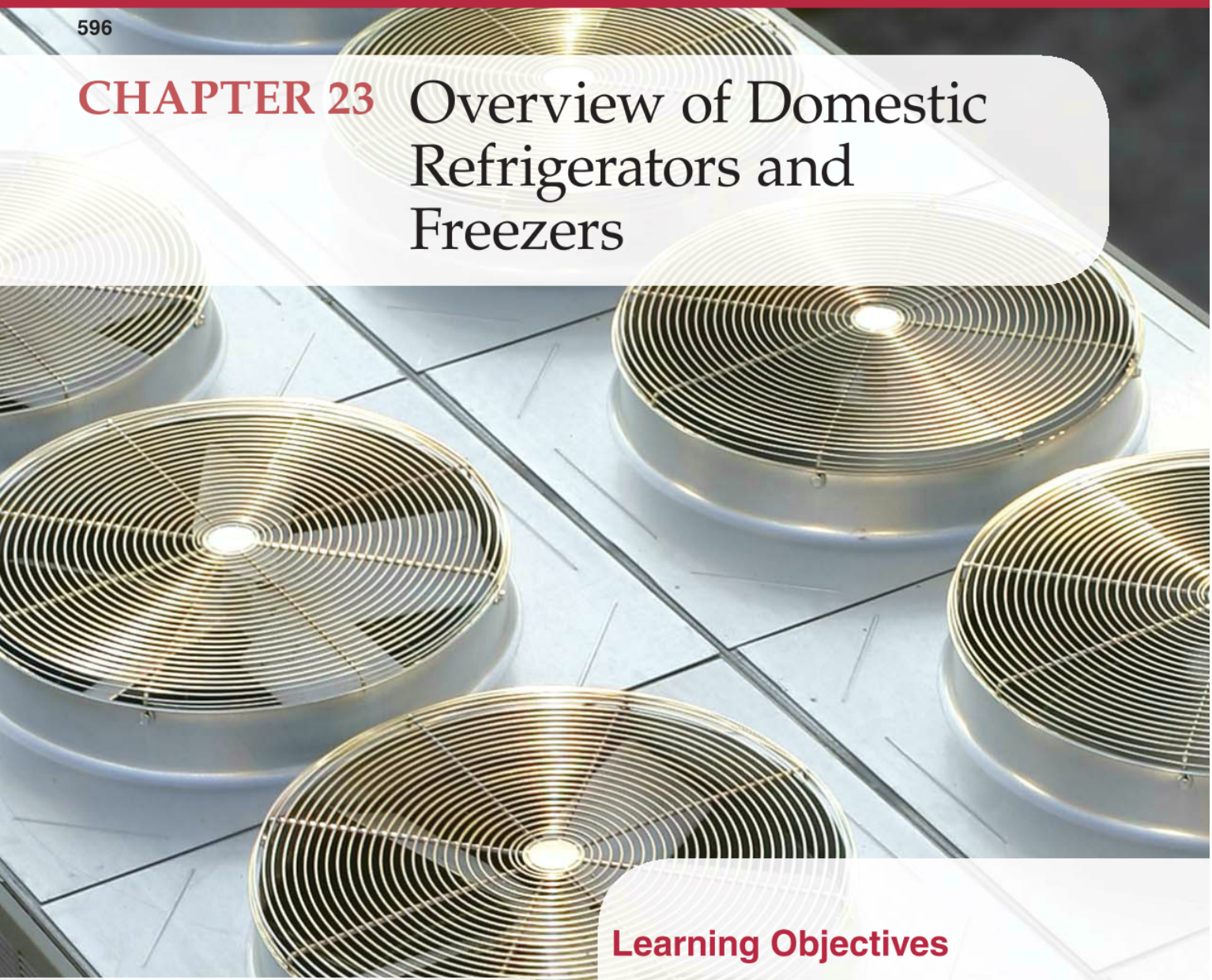

Learning Objectives

Information in this chapter will enable you to:

- Summarize the differences between domestic refrigeration systems and commercial refrigeration systems.
- Recall the causes of food spoilage and explain how domestic refrigeration systems minimize spoilage.
- Summarize the operation of an automatic defrost system in a frost-free freezer.
- Illustrate airflow patterns in top, bottom, and side-by-side refrigerator-freezer units.
- Explain how refrigerator and freezer cabinets are constructed.
- Identify the features of gaskets used in refrigerator and freezer doors.
- Identify innovative refrigeration and freezer units currently available in the marketplace.

Chapter Outline

23.1 Domestic Refrigeration
- 23.1.1 Preserving Foods by Refrigeration and Freezing
- 23.1.2 Storage of Fresh Foods in the Refrigerator
- 23.1.3 Storage of Frozen Food in the Freezer

23.2 Refrigerators and Freezers
- 23.2.1 Freezers
- 23.2.2 Refrigerator-Only Units
- 23.2.3 Refrigerator-Freezers
- 23.2.4 Cabinet Construction

23.3 Innovative Technologies
- 23.3.1 Refrigerators with Media Capabilities
- 23.3.2 Wine Coolers

Technical Terms

bottom freezer
chest freezer
dehydration
enzymes
freezer burn
side-by-side
top freezer
upright freezer

Review of Key Concepts

Reviewing these concepts from earlier chapters will help you understand new concepts presented in this chapter:

- Refrigeration systems use a refrigerant to absorb heat inside the refrigerated space and release the heat outside the space. (Chapter 6)
- A control system is a collection of interacting components that work together to regulate conditions, such as temperature, pressure, and humidity, within a conditioned space. (Chapter 16)
- A capillary tube metering device consists of a length of seamless tubing with a small and precisely formed inside diameter. A capillary tube acts as a constant throttle on the refrigerant flow. (Chapter 20)

Introduction

One of the most common modern refrigeration products is the household refrigerator-freezer. Almost every home has some form of self-contained refrigeration system that provides safe storage of perishable goods.

This chapter explains the causes of food spoilage. It also describes the construction and operation of the various types of domestic refrigeration systems used to prevent spoilage. The differences between domestic refrigeration systems and commercial refrigeration systems are also addressed.

Video

- Domestic Refrigeration Systems

23.1 Domestic Refrigeration

A major difference between a domestic refrigerator, **Figure 23-1**, and a large commercial refrigeration system is the close proximity of the conditioned space to the unconditioned space. In a commercial refrigeration system, the conditioned space is usually a large enclosure within a building. The heat is transferred from the conditioned space to the refrigerant, which is usually circulated to an outdoor condenser to release its heat into ambient air.

The conditioned space in a self-contained refrigerator, freezer, or refrigerator-freezer is inside of the cabinet. The unconditioned space is the area immediately outside the cabinet. Heat is absorbed from inside of the cabinet by the refrigerant and transferred outside of the cabinet. The heat is often released into another conditioned space, such as an air-conditioned room, which is climate-controlled by a completely separate system.

The conditioned space in a refrigerator could range from +40°F to –10°F (+4°C to –23°C). The air outside the refrigerator cabinet could range from 0°F (–18°C) to greater than 100°F (+38°C). Because of the wide range of temperatures, the system must be designed with enough capacity for the most extreme conditions, yet operate efficiently at normal temperatures.

Maytag Corporation

Figure 23-1. A side-by-side refrigerator and freezer.

One of the more confusing aspects of a self-contained refrigerator to an experienced HVACR technician is the pressures observed when checking the high and low sides of the system. The evaporator is often 10°F to 15°F (6°C to 8°C) cooler than the conditioned space. This means that the evaporator temperature will be anywhere from 0°F to –25°F (–18°C to –32°C) in a refrigerator-freezer. The condenser temperature is usually at least 10°F (6°C) higher than the ambient temperature. In a hot environment, this could place the condenser temperature near 120°F (49°C).

At these temperatures, the most common refrigerant currently used in domestic refrigerators (R-134a) will have a low-side pressure between near zero and a slight vacuum. High-side pressures in the same system will be roughly 180 psig or higher. It is always important to keep the current temperatures of the high and low side of the system in mind before dismissing gauge readings that may seem abnormal at first.

Another interesting trait of a self-contained system, such as a refrigerator, is the quantity of liquid refrigerant in the evaporator. As the system nears the cut-out temperature, the amount of heat available to boil the refrigerant as it leaves the metering device (capillary tube) is low. Liquid refrigerant can travel quite a distance through the evaporator before enough heat has been absorbed to boil the refrigerant into a gas. Also, when the system cycles off, the pressure in the high side of the system will continue to force refrigerant through the capillary tube into the low side until the pressures in the high side and the low side equalize. The refrigerant may sit as a liquid in the evaporator until the temperature control calls for cooling again.

23.1.1 Preserving Foods by Refrigeration and Freezing

Foods (vegetables and fruits) last longer when kept at temperatures just above freezing. These temperatures slow down oxidation of the food. This reduces the multiplication of the bacteria in the cells and fibers. It also reduces the ***dehydration*** (drying) of the food.

Causes of Food Spoilage

A number of factors can contribute to the deterioration and spoilage of food: microbial growth, dehydration, oxidation, enzyme action, and cellular breakdown. The degree to which each of these factors affect the freshness of food varies with the type of food. For example, fruits and vegetables are especially prone to enzyme action and dehydration. Meats and poultry are very prone to spoilage from microbial growth.

Copyright Goodheart-Willcox Co., Inc.

Enzymes are specific types of proteins in food that trigger organic change. Enzymes, which can cause food spoilage, are kept under control by low temperatures. Enzymes are not destroyed by fast freezing, but their growth rate is slowed down by the low temperatures.

Fleshy foods, such as meats, fish, and poultry, spoil quickly because of the growth of bacteria and other microorganisms on the food. Bacteria are everywhere, but their growth and spread can be controlled by using sanitary handling methods and by storing food at low temperatures. Cellular breakdown, which happens naturally as food ages, can also lead to spoilage. Again, low temperatures slow the progress of cellular breakdown.

The water in food forms ice crystals when the food is frozen. Fast freezing produces smaller ice crystals that are less damaging to the food. Slow freezing allows time for larger crystal growth. Larger ice crystals damage the food's cell walls more than small ice crystals.

Dehydration is simply the loss of water from the food. Dehydration results in shriveling of fresh food and freezer burn in frozen foods. Dehydration alone does not spoil food, but it can give the food a bad taste and unpleasant texture. Oxidation causes discoloration and spoiling of food. Some common examples of the oxidation of foods include the gradual browning that occurs in uncured meat and sliced apples.

23.1.2 Storage of Fresh Foods in the Refrigerator

The air in a refrigerator is always quite dry. Any moisture in the refrigerator collects and condenses on the evaporator surfaces. Therefore, food containers should be covered and as airtight as possible to keep food moist and to maintain a dry interior.

The refrigerator cabinet temperature should be kept at 35°F to 40°F (2°C to 4.5°C). The Food and Drug Administration (FDA) recommends that refrigerators be set to maintain a product temperature of 40°F (4.5°C) or lower. Most fresh foods can be kept from three days to a week at the above temperatures. Unfrozen meat and fish should be stored at as close to 32°F (0°C) as possible.

23.1.3 Storage of Frozen Food in the Freezer

If not properly packaged, frozen food will develop freezer burn. ***Freezer burn*** is basically dehydration of the frozen food, which results in a change in color, flavor, and texture of the food. Food value is not affected, but the change in appearance and taste of the food will make it less appealing. Repeated thawing and refreezing of any food damages its cellular structure and also results in freezer burn.

Like the air in a refrigerator, the air in a freezer is also very dry. It is very important, therefore, that all frozen foods be stored in moisture-resistant packaging. This helps prevent moisture in the food from escaping to the air in the cabinet, which would cause the food to become dehydrated and freezer burnt. To prepare food for the freezer, as much air as possible should be removed from the packaging. Frozen food packages must be tightly sealed. Ordinary paper is too porous for freezer use. Also, hot foods should be allowed to cool before being placed in the freezer.

Most frozen foods can be kept for several weeks at 0°F to –10°F (–18°C to –23°C). Food to be kept for a year or more should be frozen at –20°F (–29°C) or lower. Some frozen foods keep better than others.

23.2 Refrigerators and Freezers

There are many different styles of refrigerators and freezers available for use in the home. The following sections describe some of the most common domestic refrigerator and freezer units.

23.2.1 Freezers

Freezer cabinets can be classified in two main categories: chest and upright. ***Chest freezers*** are freezer units that have the door on the top of the unit. ***Upright freezers*** are freezer units that have the door on the side of the unit. See **Figure 23-2**.

Chest freezers have a definite advantage over upright freezers when it comes to efficiency. Since cooler air falls, little cold air is lost when the lid is opened on a chest freezer. Compare this to an upright freezer, where opening the door effectively removes an entire wall from the cabinet. The main advantage of an upright freezer is that they make it easier to locate items than a chest freezer does.

Chest freezers almost always have a natural-draft evaporator and hot-wall condenser. The interior walls of the freezer are used to remove heat from the contents and the exterior walls are used to dissipate this heat to the ambient air. Chest freezers require clearance around the entire cabinet for the condenser to maintain proper temperature, **Figure 23-3**.

As freezers maintain low-temperatures, frost gradually accumulates on the evaporator. This frost

Copyright Goodheart-Willcox Co., Inc.

Maytag Corporation; Maytag Corporation

Figure 23-2. Freezers may be upright or chest. A chest freezer is more efficient to operate than an upright freezer. An upright freezer provides good dispersion of cooling capacity.

must be removed either manually or automatically. Therefore, upright freezers can be classified as either frost-free (automatic defrost) or manual defrost.

Manual Defrost

Older systems or small units are often manual defrost. The evaporator in a manual defrost system is often routed throughout the cabinet as a series of shelves. These shelves remove heat from the cabinet interior and also provide support for the freezer's contents. This type of design provides good dispersion of the cooling capacity, but it requires manual defrosting.

A manual defrost freezer does not have any means of automatically removing frost buildup from inside the cabinet. When the cabinet's interior becomes coated with frost, the freezer is taken out of service, the contents of the freezer are removed, and the frost is allowed to melt.

Caution

Manual Defrosting

Never scrape ice when manually defrosting, as you could accidentally damage the tubing or cabinet. After defrosting, clean all surfaces in the cabinet.

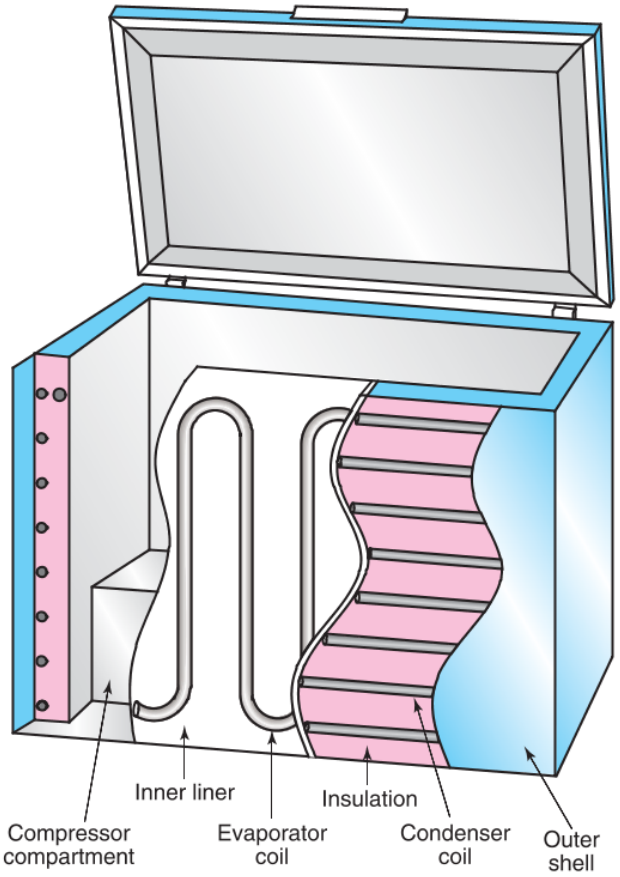

Goodheart-Willcox Publisher

Figure 23-3. A typical chest freezer evaporator and condenser design. The condenser coil is near the outer surface of the chest. The evaporator coil is near the inner surface of the chest. A thick layer of insulation separates the two coils.

Copyright Goodheart-Willcox Co., Inc.

Frost-Free

A frost-free freezer is equipped with a defrost system that automatically prevents an excessive buildup of frost inside the cabinet. A typical defrost system consists of a defrost timer, a defrost heater, and a defrost thermostat. The defrost timer is wired so that at any given time, it is completing a circuit either to the compressor or to the defrost heater (an electric heating element). Therefore, only the compressor or defrost heater will be in operation at any given time. The defrost heater is located close to the evaporator coil and applies heat during the defrost cycle.

The defrost timer turns off the compressor and turns on the defrost heater every 6 to 8 hours. Any accumulated ice will melt and drain into a drip pan in the condenser area. The defrost thermostat monitors the temperature inside the cabinet and deactivates the heating coil if the temperature inside the cabinet rises above the set limit (approximately 40°F). After approximately 20 to 30 minutes, the defrost timer turns off the defrost heater and turns the compressor back on. Heat from the compressor evaporates the water collected in the drip pan. The drip pan should be cleaned occasionally.

Thinking Green

Defrost Timers

There are two types of defrost timers: continuous and intermittent. Continuous defrost timers are always counting down to the next defrost cycle, whether the compressor is running or not. As a result, the freezer may perform unnecessary defrost operations. Intermittent defrost timers count down to the next defrost cycle only when the compressor is running. If a freezer is not opened frequently, the compressor runs less frequently and fewer defrost cycles are needed. In these applications, intermittent defrost timers are more energy efficient because they perform defrost operations only as needed.

Figure 23-4 shows a ladder diagram of a defrost system in a frost-free upright freezer. Note that all parts are grounded through the three-prong plug and cord. The compressor and fan circuits are open during the defrost cycle.

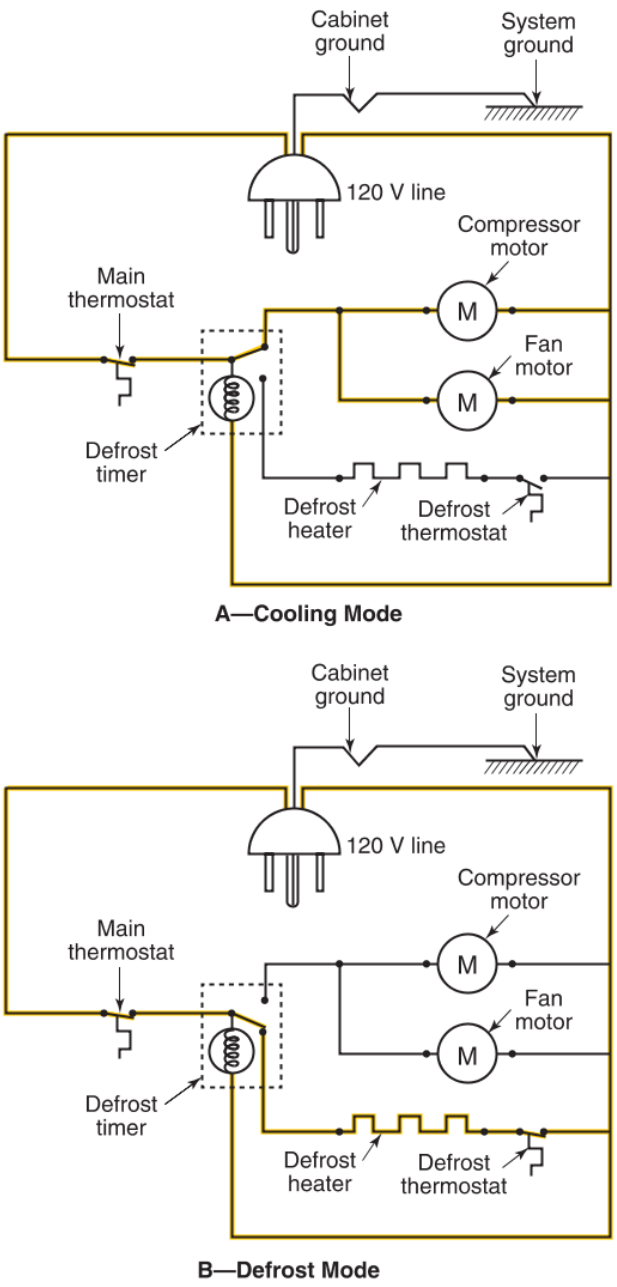

Goodheart-Willcox Publisher

Figure 23-4. Ladder diagram of a defrost system in a frost-free freezer. A—In cooling mode, the defrost timer completes the circuit through the compressor and fan motors. B—In defrost mode, the defrost timer redirects current from the compressor and fan motors to the defrost heater. If the cabinet temperature rises too high, the defrost thermostat will open, shutting off the defrost heater.

23.2.2 Refrigerator-Only Units

Systems are available that are for refrigeration only. See **Figure 23-5**. The entire cabinet is designed to keep products at the ideal fresh food temperatures. Since frosting issues in a refrigerator compartment are not as severe as in a freezer compartment, a refrigerator-only unit may not include a defrost system. The warmer temperature inside the cabinet prevents frost accumulation. Most refrigerator-only units are smaller and are often designed for lower volume applications, such as storing beverages.

Copyright Goodheart-Willcox Co., Inc.

Sub-Zero/Wolf Appliance

Figure 23-5. A refrigerator-only unit, designed to store fresh foods.

23.2.3 Refrigerator-Freezers

The majority of the residential refrigeration systems in use are combination refrigerator-freezers. There is a compartment that maintains proper temperatures for frozen food storage and another compartment for fresh food storage.

Refrigerator-freezers are available in three major designs: top-freezer, bottom-freezer, and side-by-side. A ***top freezer*** design places the evaporator in a frozen food compartment at the top of the cabinet. Part of the cooled air is directed into the lower fresh food section by the evaporator fan. The amount of air that flows into the fresh food section is regulated by a damper. As cooler air is forced into the fresh food section, warmer air will be forced back up into the freezer section for heat removal. See **Figure 23-6**.

In a ***bottom freezer*** design, the compartment positions are reversed. The evaporator is mounted in a frozen food compartment at the bottom of the cabinet and the cold air is forced to the top of the fresh food section through a duct. A damper controls the amount of the total volume of air that flows into the fresh food section. The airflow into the fresh food section forces air to return into the freezer compartment for heat removal. See **Figure 23-7**.

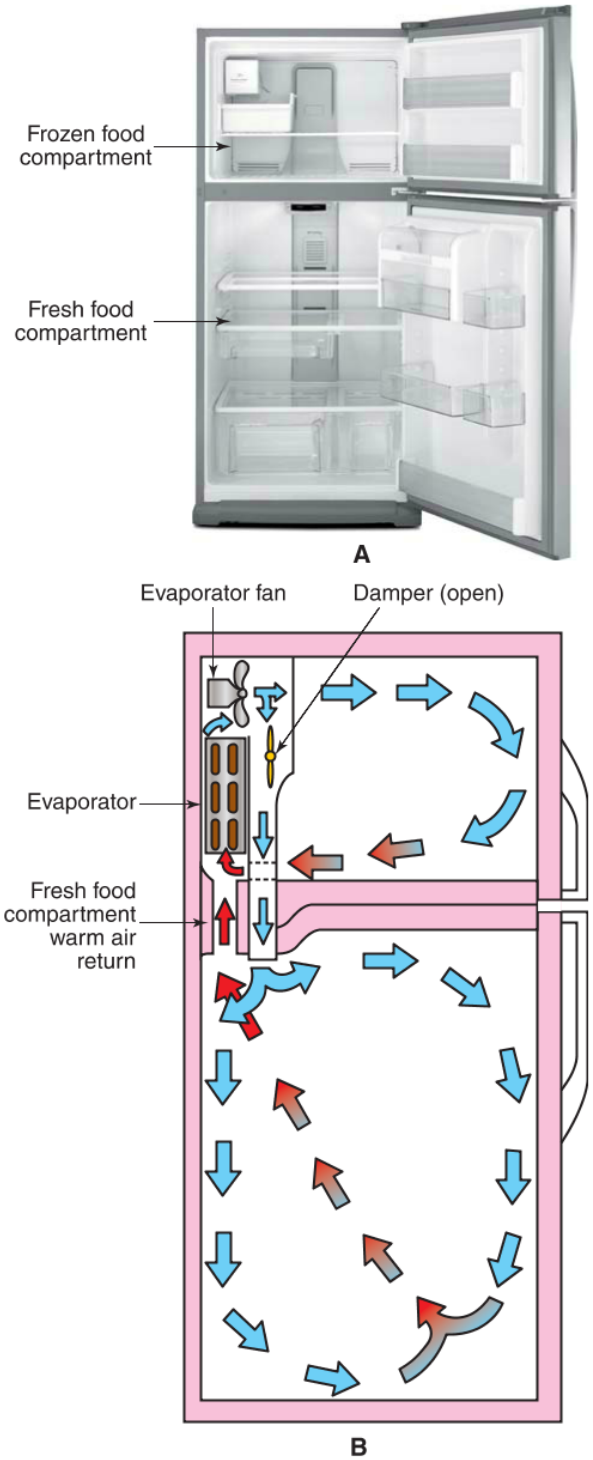

Maytag Corporation; Goodheart-Willcox Publisher

Figure 23-6. A refrigerator with a top freezer design. A—The freezer compartment is smaller than the fresh food compartment. It is located at the top of the unit and has its own door. B—The evaporator is located at the top of the cabinet. Conditioned air is divided between the fresh food and freezer compartments. The damper position determines how much of the cold air from the evaporator is diverted to the fresh food compartment.

Copyright Goodheart-Willcox Co., Inc.

A

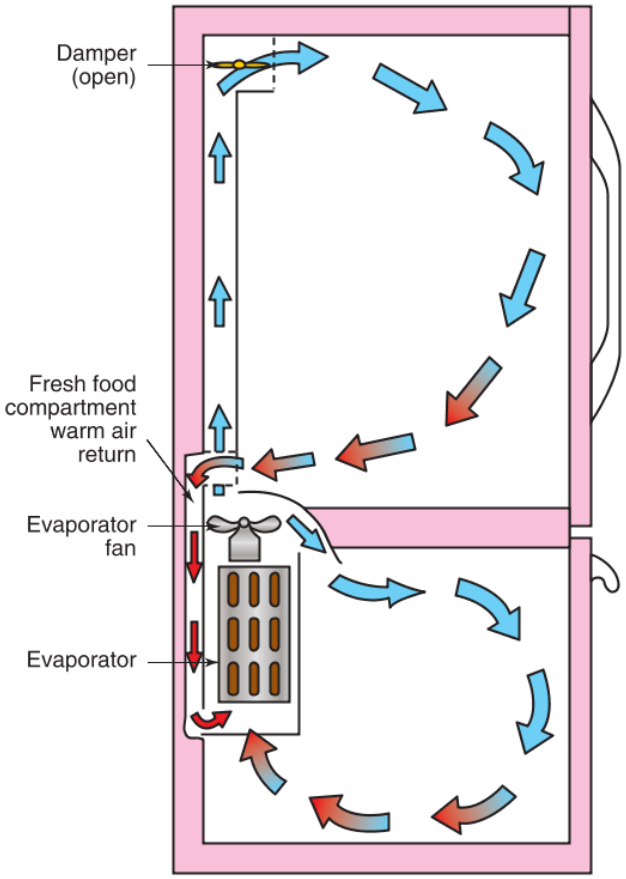

B

Amana Refrigeration, Inc.; Goodheart-Willcox Publisher

Figure 23-7. This refrigerator has a bottom freezer design. A—The freezer compartment is located under the refrigerator portion of the unit. B—The airflow in a typical bottom-freezer design refrigerator is shown here.

Thinking Green

Efficiency of Freezer Designs

Pull-out drawer bottom freezers are more efficient than the swinging door type. When the freezer drawer is pulled out, the cold air remains in the bottom of the drawer. By contrast, when an upright freezer door is swung open, cold air spills out of the entire freezer compartment.

A ***side-by-side*** design places the freezer and fresh food compartments next to each other. Both the fresh food and the freezer sections run the full height of the cabinet. The fresh food compartment is normally a larger percentage of the total cabinet space than the freezer section. Some of the cold air passing through the evaporator is directed into the fresh food section and the rest is directed into the freezer. The amount of air crossing over into the fresh food section is determined by the damper position. The cool air circulates through the frozen food and fresh food sections and returns to the evaporator through warm air returns, **Figure 23-8**.

Some designs include secondary air ducts that aid in targeted cooling of different sections of the refrigerator. As an example, cool air can be directed into a beverage chiller built into the fresh food door. A separate duct can also be directed to a storage drawer to provide cooler air for longer storage of meat products.

8

Thinking Green

Improving Refrigerator Efficiency

The thermal mass of a refrigerator's contents helps to maintain a constant temperature inside the cabinet. For this reason, a full refrigerator is more energy efficient than an empty one. If a refrigerator spends most of its time empty or only partially filled, its long-term efficiency can be improved by filling some of the empty space with containers of water. Once the water is cooled, it will help to stabilize the cabinet temperature.

23.2.4 Cabinet Construction

Most refrigerator-freezer cabinets are formed from only two or three sheets of steel. The bottom and back are formed from one sheet of steel while the sides and top wrap around the first piece and form an exterior shell. If the compressor is mounted in the rear bottom of the cabinet, a base pan is usually formed in the shell to provide a mounting location for the high-side components.

The interior liner is typically made of vacuum-formed plastic. The exact type of plastic used in the liner will depend on the manufacturer and can

Copyright Goodheart-Willcox Co., Inc.

A

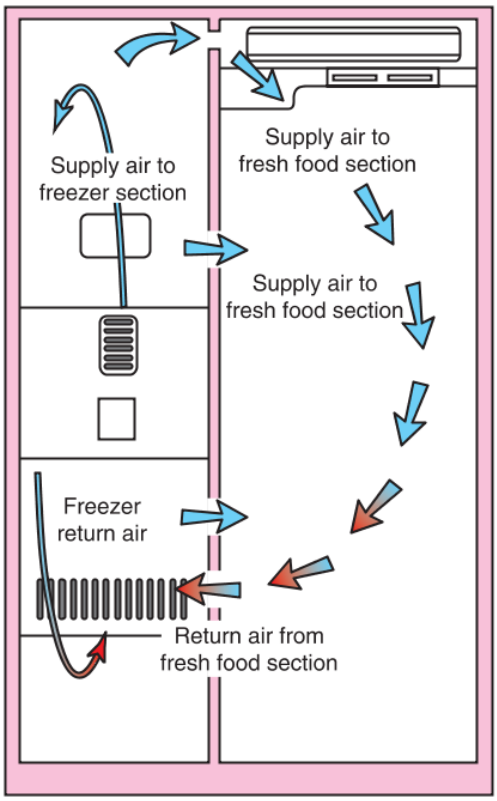

B

Maytag Corporation; Amana Refrigeration, Inc.

Figure 23-8. Side-by-side designs have a freezer on one side of the cabinet and the refrigerator on the other. A—The freezer section, on the left, is narrower than the refrigerator section. B—The airflow through a typical side-by-side refrigerator-freezer.

vary from model year to model year. This type of liner provides a moisture-resistant interior and a tight cabinet seal. In a few models of refrigerators and freezers, individual sheets of steel are sealed together to create a moisture-resistant liner.

Expanding foam insulation is installed in the void between the exterior shell and the interior liner. All inner-cavity components and interior support structures must be in place prior to the foaming process. These components include the cabinet's wiring harnesses, shelf supports, post condenser loops, heat exchangers, and supplemental air ducting. Any component that may require replacement at a later time requires the placement of a duct. This duct provides a channel through which a replacement component can be routed.

Once all the interior components are placed, the liner is temporarily affixed, and the entire cabinet (including the liner) is directed through a foaming process. The first step of the foaming process is the warming of the cabinet. The warming expands the shell and liner, increasing the space that will be filled with insulating foam. Once the cabinet is preheated, a heated die is placed inside the cabinet to maintain the liner shape while expanding foam is injected into the space between the liner and the shell. The space is entirely filled with foam, and the foam is allowed to cure before the die is removed.

Doors

Like cabinets, doors consist of an outer shell, foam-filled core, and an inner liner. The inside of the door is often designed with supports for the placement of storage bins. Two very common types of specialized bins are those for storing gallons of milk and those for storing butter. Some door storage compartments are cooled by air redirected from the freezer section. This keeps the storage compartment slightly cooler than the rest of the fresh food compartment.

On most refrigerators, a rubber gasket is mounted to the door. These gaskets are pressed into a channel on the door, and form an airtight seal between the door and cabinet when the door is closed, **Figure 23-9**.

A magnetic strip or a series of small magnets inside the gasket pull the gasket to the face of the refrigerator cabinet. Because of the attraction between the magnets in the gasket and the metal cabinet shell, a good seal can be achieved without an external latch, **Figure 23-10**.

Many new doors require wiring harnesses for controls or dispensers. Just as with a foamed cabinet, wiring harnesses that run through a foamed door cannot be replaced. Through-the-door wiring usually enters through one of the hinges. The hinge pin is hollow and

Copyright Goodheart-Willcox Co., Inc.

allows for the harness to enter the door through a pivot point.

Safety Note

Refrigerator and Freezer Safety

All doors should be removed from any refrigerator or freezer being disposed. Any refrigerator or freezer placed in storage should also have the doors removed. The very real risk of suffocation exists if a child or animal is closed inside a refrigerator cabinet. This risk is much greater with older refrigerators that use a door latch.

Maytag Corporation

Figure 23-9. The gaskets in modern refrigerators are pressed into a channel formed in the refrigerator liner.

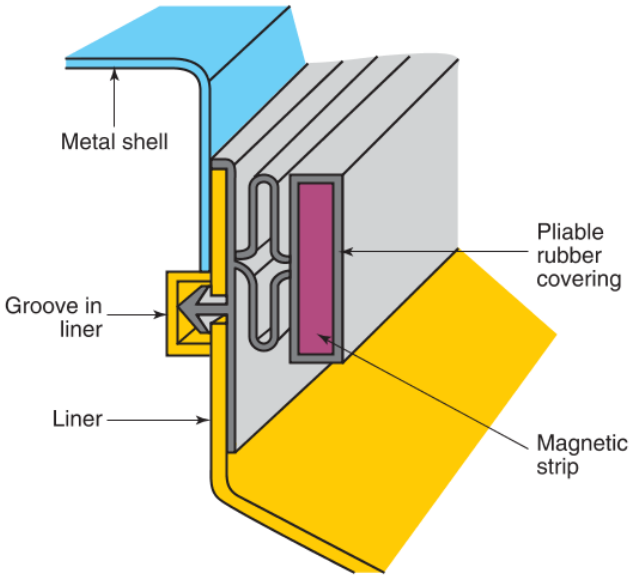

Goodheart-Willcox Publisher

Figure 23-10. Magnetic strips or bars in the door gaskets to create a tight seal in refrigerators.

23.3 Innovative Technologies

As technology evolves, manufacturers strive to integrate the changing and emerging technologies into their products. Recent innovations in domestic refrigeration make homeowners' lives easier and more enjoyable. The following are examples of new and unique products that are available.

23.3.1 Refrigerators with Media Capabilities

One method of making household tasks more enjoyable is by combining two technologies, the domestic refrigerator-freezer and the television. Homeowners can enjoy watching their favorite television shows while preparing meals in their kitchen without the clutter of a television on the counter. These units commonly feature cable-ready LCD TVs with remote control, FM stereos, and digital displays, **Figure 23-11**.

LG Appliances

Figure 23-11. This domestic refrigerator is equipped with a built-in television.

8

Copyright Goodheart-Willcox Co., Inc.

A new generation of refrigerator-freezers takes the integration of consumer electronics a step further. These appliances include technologies that help families to coordinate and manage their activities. They are equipped with Wi-Fi enabled touch screens capable of running apps like those found on smartphones. From the front panel of the refrigerator, the users can perform such tasks as searching for recipes, checking weather forecasts, scheduling events, and leaving notes for one another.

23.3.2 Wine Coolers

Many consumers today are interested in storing wine for personal consumption. Recent technology has allowed the development of cost-effective personal wine coolers. Cabinets are usually constructed of painted metal or stainless steel. See **Figure 23-12**.

The door is usually double-paned, tempered, safety glass. Racks are removable for cleaning. Wine coolers can typically maintain any set temperature

Sub-Zero/Wolf Appliance

Figure 23-12. This recessed wine cooler can provide optimal temperature for the long-term storage of wines.

Copyright Goodheart-Willcox Co., Inc.

between 38°F (3°C) to 65°F (18°C). For long-term storage of wine, the optimal temperature is 55°F (13°C).

Some units have multiple compartments, allowing the user to maintain the ideal temperature and humidity levels for both red and white wines in the same unit. A microprocessor controls the electronic functions of the cooler. The microprocessor monitors the temperature and maintains the exact temperature set by the owner. Units may have an alarm button that sounds if the door is left open, **Figure 23-13**.

Jenn-Air of Whirlpool Corp.

Figure 23-13. This wine cooler allows the user to set different temperatures for the top and bottom of the cabinet.

8

Copyright Goodheart-Willcox Co., Inc.

Chapter Review

Summary

- The conditioned and unconditioned spaces of domestic refrigerators are often in near proximity to each other, while a commercial refrigeration system generally has more distance between its spaces. A domestic system's limited refrigerant charge, wide range of operation, and system pressures can confound experienced HVACR technicians.
- The primary function of refrigerators and freezers is to prevent food spoilage. Domestic refrigerators and freezers are usually self-contained units. Often, domestic refrigerator and freezer units have liquid refrigerant present in the evaporator.
- Food spoilage can be caused by enzyme action, microbial growth, cell breakdown, oxidation, and dehydration. Foods to be stored in a refrigerator should be placed in airtight containers to prevent moisture from escaping from the food into the dry cabinet air.
- Foods stored in a freezer are susceptible to freezer burn. Freezer burn is a dehydration of frozen food that results in a change in the color, texture, and flavor of food.
- Freezer cabinets can be classified as chest freezers and upright freezers. In a chest freezer, the door is located on the top of cabinet. This minimizes the loss of cold air when the door is opened, making the chest design the most efficient. An upright freezer has the door on one side of cabinet. This design allows cold air to escape every time the door is opened. The primary advantage of an upright freezer is that it makes it easier to search through a cabinet's contents.
- Refrigerator-only units are generally smaller than refrigerator/freezer units and are designed for lower volume applications, such as storing beverages. Frosting is less of a problem with refrigerator-only units. Therefore, they are less likely to be equipped with a defrost system.
- Refrigerator/freezer units may have the freezer compartment at the top of the unit, the bottom of the unit, or side-by-side with the refrigerator compartment. An evaporator is generally located in the freezer compartment. Cold air ducts direct some of the refrigerated air from the freezer compartment into the refrigerator compartment.
- The shell of a refrigerator or freezer cabinet is usually formed from steel sheets. A vacuum-molded plastic liner is placed inside the steel shell. Foam insulation fills the void between the shell and the liner.
- A gasket between the door and the cabinet forms an airtight seal when the door is closed. These gaskets generally contain a magnetic strip or series of small magnets that seal the gasket against the cabinet when the door is closed.
- As technology advances, more and more innovative products enter the market. Refrigerators are available with built-in televisions, stereos, and Wi-Fi enabled touch screens. As a form of specialty domestic refrigeration, personal wine coolers are also available and growing in popularity.

Review Questions

Answer the following questions using the information provided in the chapter.

1. Which of the following traits is common among domestic refrigerator-freezers?
   A. The low-side and high-side pressures equalize during the Off cycle.
   B. The evaporator usually contains some liquid refrigerant.
   C. Evaporator temperatures range from 0°F to –25°F (–18°C to –32°C).
   D. All of the above.
2. Fast freezing preserves food better than slow freezing because _____.
   A. it destroys enzymes that deteriorate food
   B. it forms smaller water crystals that are less damaging
   C. it kills microorganisms more quickly
   D. there is less time for food to oxidize

Copyright Goodheart-Willcox Co., Inc.

3. Refrigerators should be set to maintain a product temperature of _____ or less.
   A. 0°F (–18°C)
   B. 32°F (0°C)
   C. 40°F (4.5°C)
   D. 65°F (18.3°C)
4. Which of the following is the main advantage of a chest freezer compared to an upright freezer?
   A. A chest freezer can achieve colder cabinet temperatures than an upright freezer.
   B. A chest freezer is more efficient than an upright freezer.
   C. It is easier to locate items in a chest freezer.
   D. All of the above.
5. Which of the following statements regarding frost-free freezers is *not* true?
   A. Defrost cycles occur every 6 to 8 hours.
   B. Defrost timers control the duration of the defrost cycle.
   C. The defrost cycle begins any time the defrost thermostat closes.
   D. The frost buildup is melted by electric heating elements.
6. The evaporator in most refrigerator-freezers is located in the _____.
   A. door, using a through-the-door wiring harness
   B. freezer section
   C. fresh-food section
   D. same compartment as the compressor
7. In a refrigerator-freezer, the percentage of cold air that is delivered to the fresh-food compartment is controlled by the _____.
   A. evaporator tubing
   B. damper
   C. gasket
   D. None of the above.
8. The outer shell of a refrigerator-freezer is typically made from _____.
   A. fiberglass
   B. steel sheets
   C. vacuum-formed plastic
   D. None of the above.
9. When closed, the refrigerator door seals tightly to the cabinet because of _____.
   A. a sticky gasket on the door that adheres lightly to the shell
   B. magnetic attraction between the gasket and door shell
   C. sheer force of will
   D. spring tension
10. Wine cooler doors are typically made of _____.
   A. PVC
   B. double-paned, tempered, safety glass
   C. steel sheets and vacuum-formed plastic
   D. polycarbonate

Copyright Goodheart-Willcox Co., Inc.

CHAPTER 24 Systems and Components of Domestic Refrigerators and Freezers

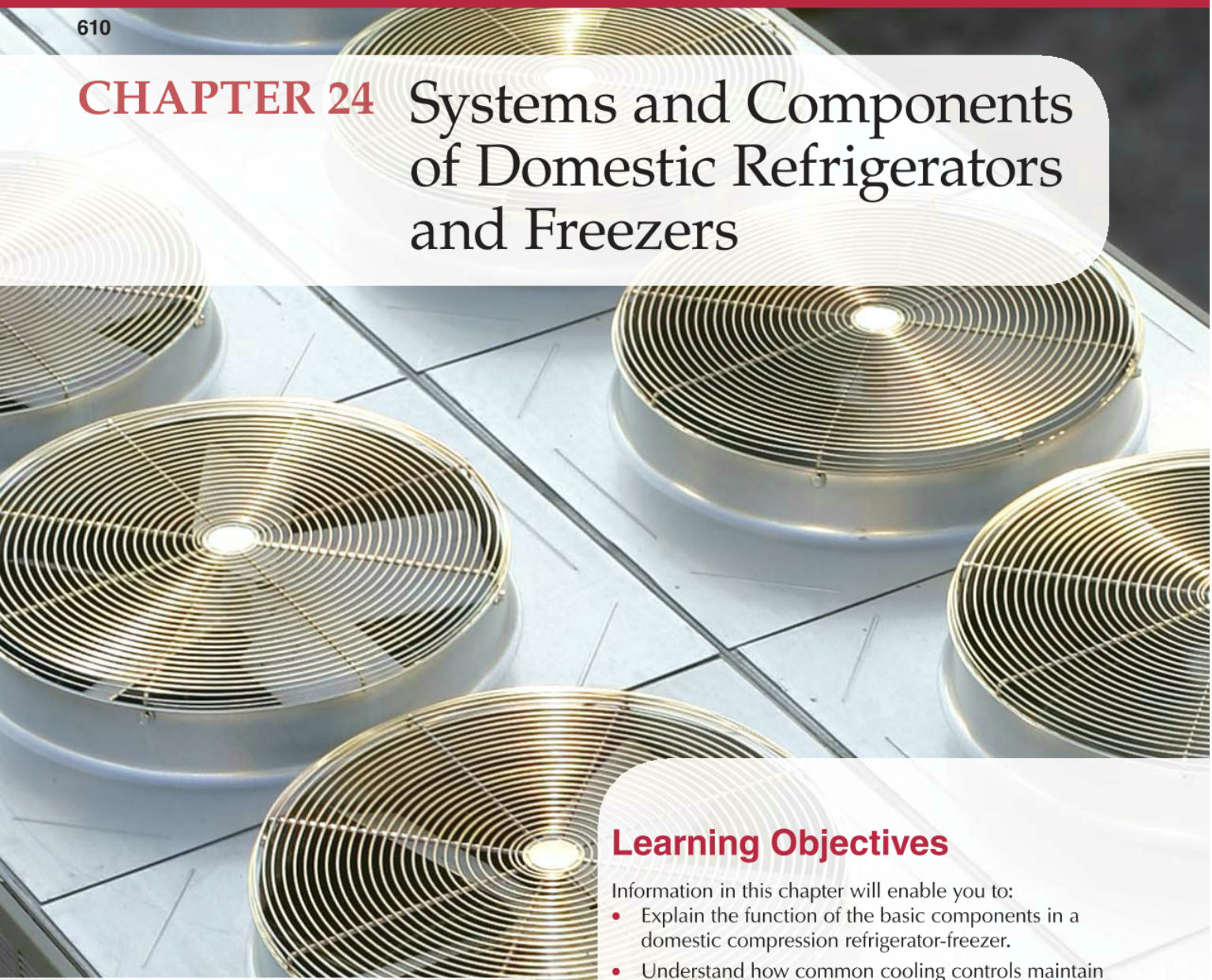

Learning Objectives

Information in this chapter will enable you to:

- Explain the function of the basic components in a domestic compression refrigerator-freezer.
- Understand how common cooling controls maintain the desired conditions inside a domestic refrigerator-freezer.
- Describe how dampers are used to control temperatures in frozen food and fresh food compartments of a domestic refrigerator-freezer.
- Understand the operation of common defrost systems used in domestic refrigerator-freezers.
- Explain the purpose of condensation controls in domestic refrigerator-freezers and describe their operation.
- Describe the methods used to control conditions inside crispers and humidity-controlled drawers.
- Summarize the operation of automatic ice makers in domestic refrigerator-freezers.
- Describe the operation of ice and water dispensers in domestic refrigerator-freezers.

Chapter Outline

24.1 Basic Components of Refrigerators and Freezers
- 24.1.1 Compressors
- 24.1.2 Condensers
- 24.1.3 Metering Devices
- 24.1.4 Evaporators
- 24.1.5 Heat Exchangers
- 24.1.6 Cooling Controls

24.2 Specialized Systems
- 24.2.1 Dampers
- 24.2.2 Defrost Systems
- 24.2.3 Condensation Control
- 24.2.4 Crispers and Humidity-Controlled Drawers
- 24.2.5 Ice and Water Systems

Technical Terms

adaptive defrost
automatic defrost system
continuous defrost timer
cumulative run-time defrost system
demand defrost controller
ejector
intermittent defrost timer
mullion heaters
post-condenser loop
Yoder loop

Review of Key Concepts

Reviewing these concepts from earlier chapters will help you understand new concepts presented in this chapter:

- The basic components of a compression refrigeration system include a compressor, condenser, metering device, and evaporator. (Chapter 6)
- Current relays are relays that are activated by current running directly through them. Current relays are usually found on low-torque, low-horsepower motors and are used to close and open the start winding circuit of a single-phase motor. (Chapter 16)
- The principal types of temperature-sensing devices used to control motor operation include the sensing bulb, the bimetal device, and electronic sensors. (Chapter 13)

Introduction

As with all refrigerant-based systems, four basic components are needed to produce cooling for a conditioned space inside a refrigerator or freezer cabinet. The four components are the compressor, condenser, metering device, and evaporator. A filter-drier is usually included in the sealed system, and an accumulator may also be present. Refrigerators may have additional specialized systems, including defrost and condensation controls, ice makers, and ice and water dispensers.

Video

- Parts of a Domestic Refrigerator

24.1 Basic Components of Refrigerators and Freezers

Most domestic refrigerators and freezers use a compression refrigeration system to control the temperature inside an insulated cabinet. A noticeable difference between domestic refrigerator-freezer units and commercial refrigeration systems is that domestic units are more compact; however, the basic components of refrigeration systems in refrigerators and freezers should be familiar from earlier chapters, **Figure 24-1**.

24.1.1 Compressors

The compressor in a domestic refrigerator or freezer is almost always a single-phase, hermetically sealed unit, **Figure 24-2**. The suction line from the evaporator connects to the outer shell of the compressor. The outlet of the compressor is connected to the discharge line going to the condenser.

Most compressors used in domestic refrigerators use split-phase motors. There are three terminals (common, start, and run) on the outside of the case for connection to the compressor's motor circuit. The run winding is energized during start-up and throughout

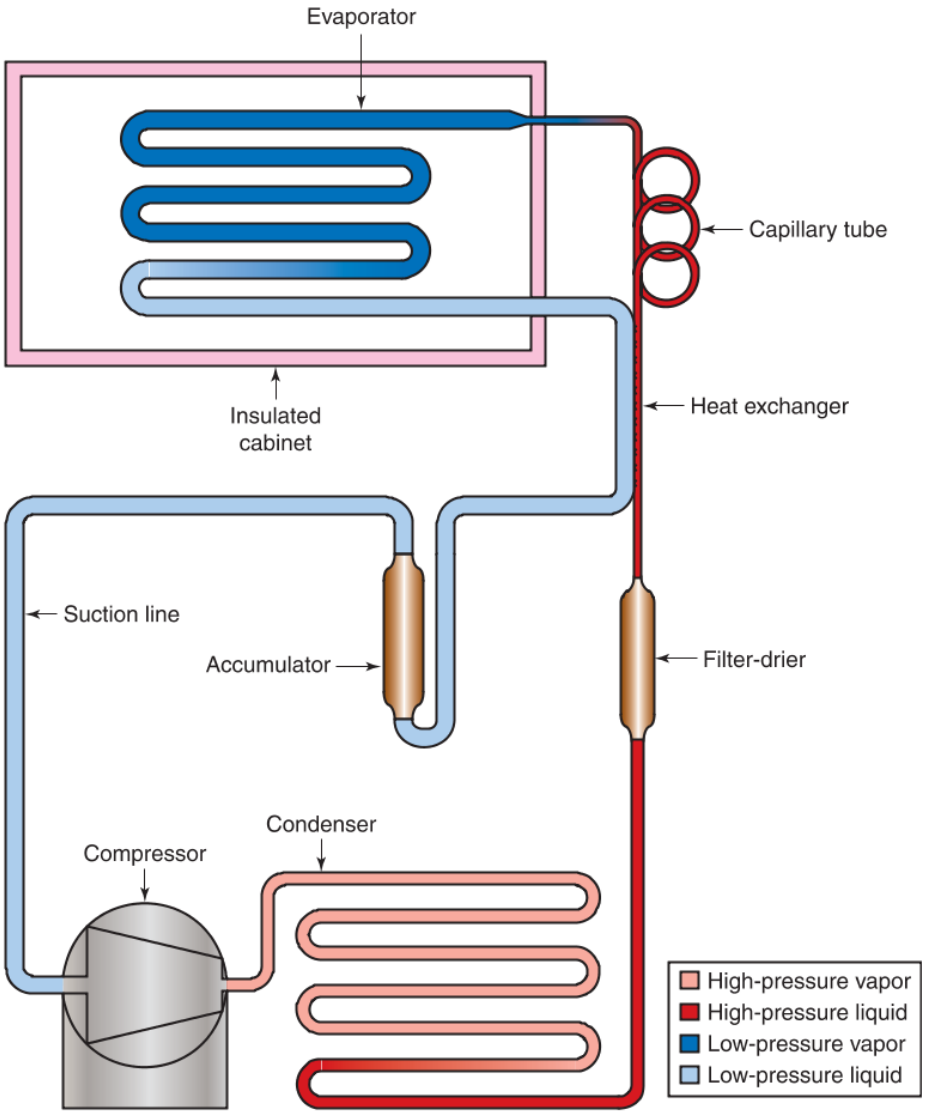

Goodheart-Willcox Publisher

Figure 24-1. Diagram of a refrigeration system typical of those found in domestic refrigerators. Note that the system uses a capillary tube metering device.

Copyright Goodheart-Willcox Co., Inc.

Maytag Corporation

Figure 24-2. A hermetic compressor commonly used in domestic refrigerator-freezers.

operation of the compressor, but the start winding is energized only during start-up, **Figure 24-3**.

Overload Protection

A stand-alone refrigerator-freezer should be the only electrical load on a given electrical circuit. Each electrical circuit in a building is connected to an electrical box (circuit breaker box, fuse box) and protected by a circuit breaker or fuse. The fuse or circuit breaker in the individual circuit must have sufficient capacity to permit a continuous flow of current under normal operating conditions. However, it should open the circuit in the event of continuous overload of more than 25%.

At the instant of starting, all motors draw high current. This may amount to 600% of the full load amperage (current while running normally). However, this initial high current draw lasts for a very short time. The circuit breaker or fuse should not open the circuit during this brief period.

Starting relays may also have some type of overload protection. The most popular type is a thermal control, also called a thermal reset. A thermal reset has a bimetal switch wired in series with the power supply to the motor. A resistance heating element is positioned alongside the bimetal switch. The heating element is also wired into the circuit and will heat the bimetal strip if the motor is overloaded. The two metals used in the bimetal strip expand at different rates as they are heated. If the strip overheats, the strip will bend because of the different expansion rates. This will open the contact points and stop the motor. The motor will not restart until the bimetal switch cools down.

Another device used in motor safety controls is the positive temperature coefficient (PTC) thermistor. A PTC thermistor is connected in series with the motor windings. The temperature increases when a high current condition exists. This causes the resistance of the thermistor to also go up. The increase in resistance limits current to the motor. After the motor and thermistor cool to a safe temperature, the motor can draw current to start up again.

Electrical Cord

Electrical power to the unit is provided through an insulated electrical cord. For domestic refrigerators, the cord is usually made from No. 18 stranded wire. These cords are insulated to withstand at least twice their normal voltage. All power cords for refrigeration units are three-wire (one green ground wire) type. The cord is usually connected to a junction box mounted in the compressor compartment.

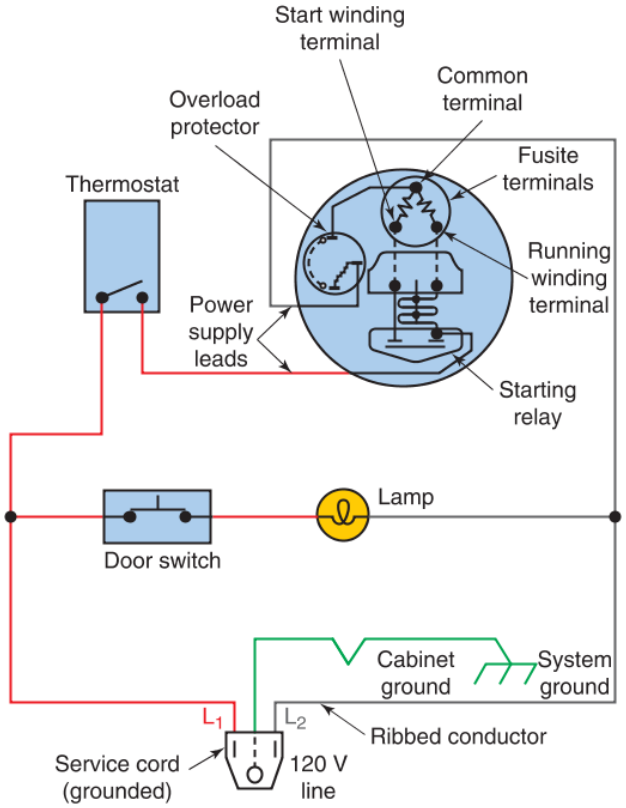

Goodheart-Willcox Publisher

Figure 24-3. Diagram showing electrical connections to the thermostat and motor control relay. This circuit includes an overload protector.

Copyright Goodheart-Willcox Co., Inc.

24.1.2 Condensers

The function of the condenser is to transfer the heat from the refrigerant to an area outside of the conditioned space. Domestic refrigerators commonly use air-cooled condensers. Air-cooled condensers may be cooled by small forced-air fans or by the unaided, natural movement of air. Some domestic refrigerators and freezers use hot-wall condensers rather than air-cooled condensers. Hot-wall condensers rely on conduction rather than convection to draw heat out of the condensing coil.

Natural-Convection Condensers

Natural-convection condensers rely on natural air movement to remove heat from the refrigerant. These types of condensers are usually mounted on the rear outside of the cabinet with space provided between the cabinet back and the condenser coil. The amount of clearance required varies by design and manufacturer. The condenser coil may consist of a serpentine tube brazed or soldered to wires, cooling fins, or a plate. The tubes and fins are usually made of copper or steel, **Figure 24-4**.

This type of condenser requires space for the free flow of air along the back of the cabinet, where it can flow around all the tubes of the condenser. Advantages of this design are that it gets the condenser out of the cabinet interior and it eliminates the need for a condenser fan to force air over the coil. A disadvantage of this design is that the exposed condenser coil could be more easily damaged, such as when being moved.

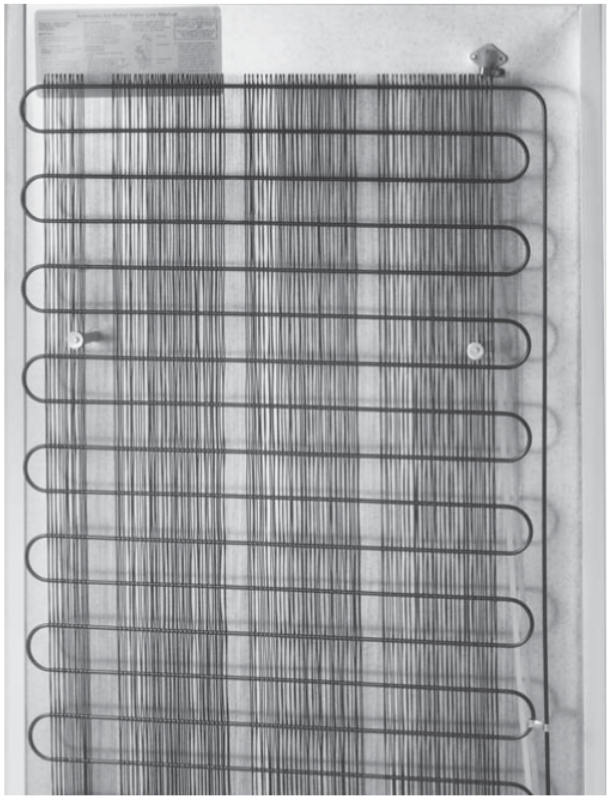

Kenmore

Figure 24-4. A natural-convection condenser relies on natural convection to remove heat.

With natural-convection condensers, proper air circulation is important. Often refrigerators are placed under a low hung cabinet, minimizing air circulation. Poor air circulation results in high head pressure and increased running time. The unit may run constantly and not provide sufficient cooling. With any natural-convection condenser, the process of dispersing heat from the refrigerant becomes less effective as the ambient temperature increases. A system that performs well in conditions between 70°F and 80°F (21°C and 27°C) will require significantly longer run times at temperatures nearing 100°F (38°C). These systems are also less tolerant of reduced airflow at higher ambient temperatures.

Hot-Wall Condensers

Some condensers are installed inside the cabinet between the insulation and the exterior skin. The condenser tubes are in direct contact with the outer wall of the cabinet, so the outer wall serves as a heat sink. This arrangement is referred to as a *hot-wall* refrigeration system. See **Figure 24-5**.

In a hot-wall system, heat is transferred from the refrigerant in the condenser to the outer cabinet surface through conduction. This design places a significant amount of heat on one side of the insulation while the opposite side of the insulation remains significantly cooler. Maintaining such a temperature difference requires an efficient and effective insulation barrier between the inner evaporator coils and the outer condenser coils. Having the condenser coil inside the cabinet shell protects the coil from possible damage. It also keeps the condenser coils clean. Another advantage of the hot-wall system is that it does not require a fan to force air through the condenser. Hot-wall condensers are very common in chest freezers.

Forced-Air Condensers

In many modern refrigerators, a forced-air condenser is used instead of a natural-convection condenser. This avoids the difficulties associated with natural-convection condensers. In a system with a forced-air condenser, a fan is used to draw ambient air through the condenser. See **Figure 24-6**.

The airflow can be used to cool the refrigerant and also the compressor. Since a forced-air condenser does not rely on natural airflow for cooling, it can be folded into a more compact area. The entire high side

Copyright Goodheart-Willcox Co., Inc.

of the sealed system can be fitted into a compartment either at the top or the bottom of the refrigerator cabinet. Since the condenser is in the cabinet, it is better protected against accidental damage.

With a more compact condenser design, the need for cleaning is greater. Airborne dirt and lint can clog the airway of the condenser. Units should be cleaned every six to twelve months to maintain proper heat transfer. Since most condensers are mounted in the bottom rear of the cabinet, care must be taken to provide enough clearance around the cabinet to allow proper airflow.

Some systems take air in along the front of the refrigerator and expel air out the back. A common name for this condenser arrangement is a single-pass condenser. The airflow passes over the condenser only once. This type of system requires that rear and top clearances be maintained for proper operation, **Figure 24-7**.

Some systems both take in and exhaust air from the front or from the back of the cabinet. This is often referred to as a two-pass system because the air flows over the

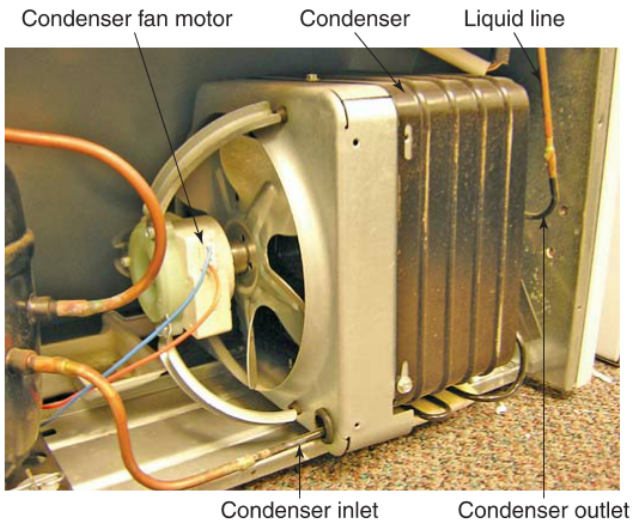

Maytag

Figure 24-6. A forced-air condenser uses a motorized fan to force air through the condenser.

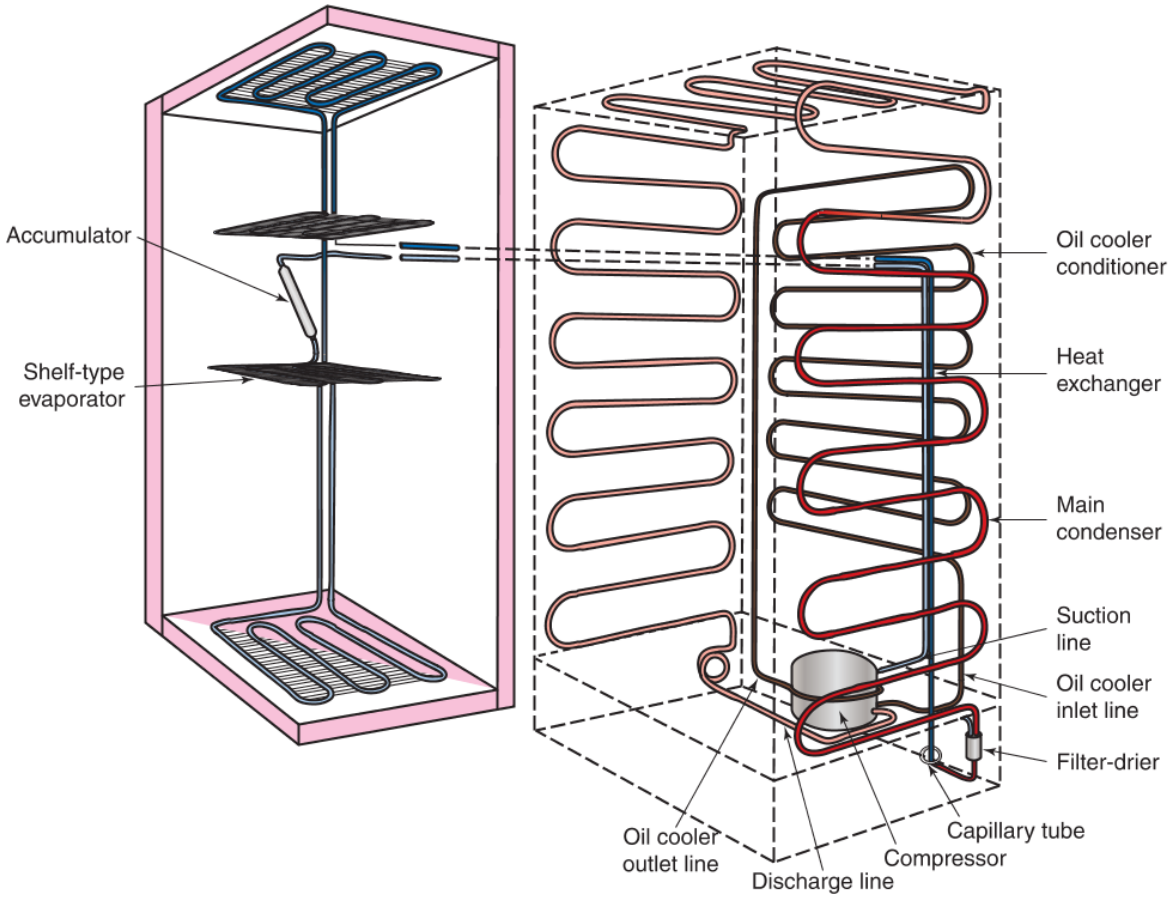

Maytag

Figure 24-5. A hot-wall condenser is located between the outer cabinet shell and the cabinet insulation. The natural-draft evaporator is located on the other side of the insulated barrier. This freezer has a separate oil cooler coil behind the insulated cabinet.

Copyright Goodheart-Willcox Co., Inc.

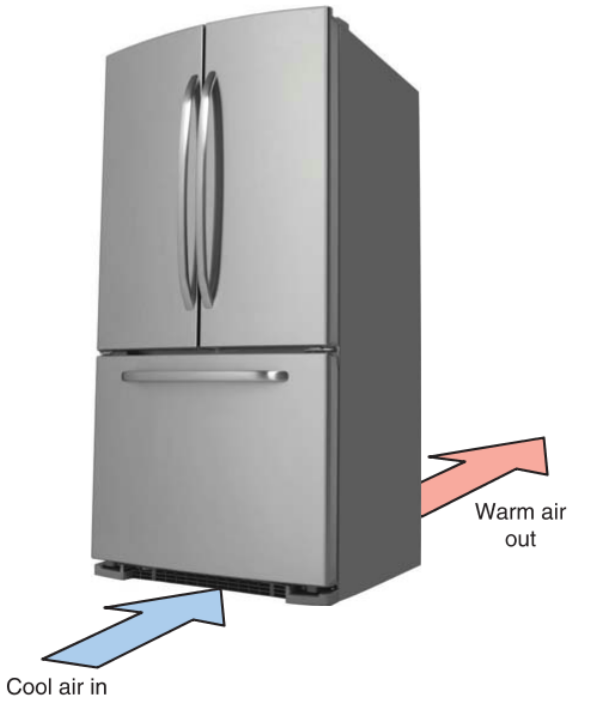

Todd Taulman/Shutterstock.com

Figure 24-7. A refrigerator-freezer with a single-pass condenser takes air in from the front and expels it out the back. The air passes through the condenser coil only once.

condenser twice. Since the air inlet and outlet are both on either the front or the rear of the refrigerator, the unit can be built into the surrounding cabinets, **Figure 24-8**.

Caution

Cardboard Partitions

Cardboard partitions are often placed near the condenser to direct the airflow. Do not remove the partitions! Removing these partitions may result in long, continuous running times and permanent damage.

There are some systems that use both forced-draft and hot-wall condensers together. This arrangement increases efficiency but reduces convenience to the consumer and the servicer. In this type of system, the pressurized refrigerant leaves the compressor and enters the forced-draft pre-condenser to dissipate significant amounts of heat. The refrigerant leaves the pre-condenser and enters the hot-wall condenser for additional heat release.

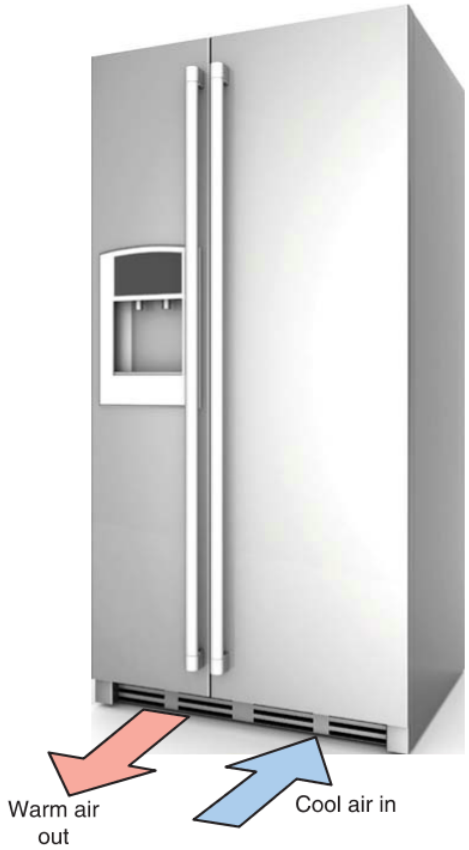

MrGarry/Shutterstock.com

Figure 24-8. In a refrigerator-freezer with a two-pass condenser, the air inlet and exhaust are either both in the front or both in the rear of the cabinet. The air passes through the condenser coil twice, once on its way in and again on its way out.

24.1.3 Metering Devices

The next required component in a basic refrigeration system is a metering device. Most domestic refrigerators use a capillary tube metering device. Capillary tubes are usually coiled to keep them compact, **Figure 24-9**.

Most refrigerators have a filter-drier located just ahead of where the refrigerant passes into the capillary tube. The filter-drier prevents moisture from entering the capillary tube, where it could freeze and cause clogging, **Figure 24-10**.

Copyright Goodheart-Willcox Co., Inc.

Sealed Unit Parts Co., Inc.

Figure 24-9. Capillary tubes are the metering devices most commonly used in domestic refrigerators.

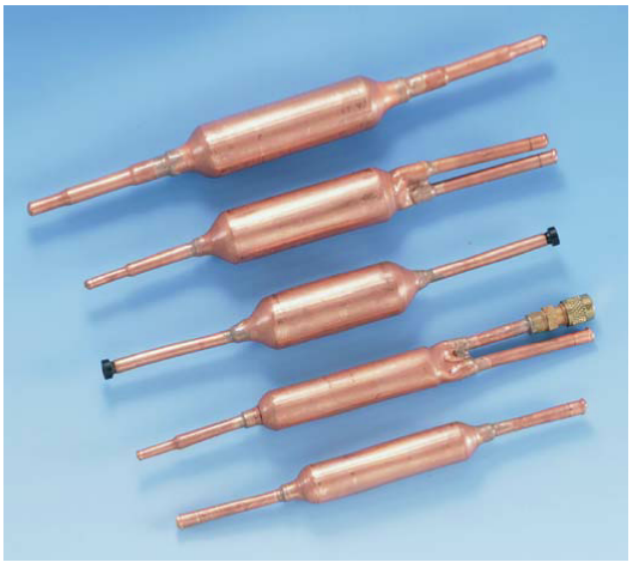

Sealed Unit Parts Co., Inc.

Figure 24-10. Filter-driers come in a variety of sizes.

The capillary tube connects the condenser to the evaporator, separating the high-pressure section from the low-pressure section of the system. It controls the flow of liquid refrigerant and causes the pressure to drop between the liquid line and the evaporator. High-pressure, warm liquid refrigerant enters the capillary tube from the liquid line. The pressure of the refrigerant is gradually reduced until it exits the capillary tube into the evaporator. The length and inside diameter of a capillary tube determine the amount of liquid flow and pressure drop into the evaporator.

24.1.4 Evaporators

Heat is absorbed inside of a refrigerator-freezer's cabinet when refrigerant passes through the evaporator. As refrigerant passes from the high-pressure side of the system to the low-pressure side of the system, the boiling point of the refrigerant drops and heat from inside the cabinet is transferred to the refrigerant as it vaporizes.

In many domestic refrigerators, the freezer section and fresh food section share one evaporator. This evaporator must operate at the freezer section's low-temperature (–10°F to +5°F) and still maintain the fresh food section at acceptable levels (35°F to 40°F). One method of maintaining this temperature difference is to redirect part of the airflow from the frozen section into the fresh food section. The other method of maintaining the temperature difference between sections is to use two evaporators in series: one for the frozen section and one for the fresh food section.

Natural-Draft Evaporators

All domestic evaporators fall into one of two classes: natural-draft or forced-draft. Natural-draft evaporators rely on natural convection to continuously circulate air across the evaporator. This type of evaporator may also be referred to as a *static evaporator*. Most natural-draft evaporators are plate-type evaporators. See **Figure 24-11**.

Plate-type evaporators consist of two plates of formed metal that are bonded together. Passages pressed into the plates create a path for circulating refrigerant. The metering device empties into the hollow path and the refrigerant cools the plates as it

Maytag

Figure 24-11. Plate evaporators sometimes double as shelving in refrigerators and freezers.

Copyright Goodheart-Willcox Co., Inc.

vaporizes. This type of evaporator is usually found at the top of the compartment.

Natural convection inside a refrigerator or freezer cabinet forces the warmest air to the top of the cabinet, where it comes into contact with the evaporator plate and loses heat. The cooled air falls, and warmer air replaces it. This natural convection cools the entire compartment slowly but efficiently.

If plate-style evaporators are used, a separate evaporator must be placed in each compartment of a refrigerator-freezer. In a small refrigerator-freezer unit, this is not a problem. A small freezer area can be formed from the evaporator, with the remainder of the compartment dedicated to fresh food storage. Older systems with separate fresh food and frozen sections required that one evaporator be placed in the freezer compartment and the other in the fresh food compartment. In such a design, refrigerant flows through the first evaporator, in the freezer compartment, and then proceeds to flow through the evaporator in the refrigerator compartment.

Forced-Draft Evaporator

A *forced-draft evaporator* uses a motor-driven fan to circulate air across the evaporator. Because the evaporator does not rely on natural convection, it allows for a more compact and versatile system. This type of evaporator may also be referred to as fan-forced or forced-air evaporator, **Figure 24-12**.

A forced-draft evaporator is a folded length of tube with heat-conductive cooling fins mounted across the tubing. A fan forces air through the fins. This arrangement allows the evaporator to be hidden from view, which appeals to consumers. It also protects the evaporator from damage to some extent.

A system may use one forced-draft evaporator to cool different compartments. It does this by using dampers to divide and direct airflow as needed. When more cooling is needed in the compartment without the evaporator, a damper opens. This allows cold air to circulate from one compartment to the next.

New technological advances have led to a refrigerator-freezer with two separate refrigeration systems. One refrigeration system provides cold air to the freezer, while the other one provides cool air for fresh food storage. The use of independent refrigeration systems allows the humidity levels in the fresh food section to increase, keeping food fresh longer. It also creates two zones of air circulation.

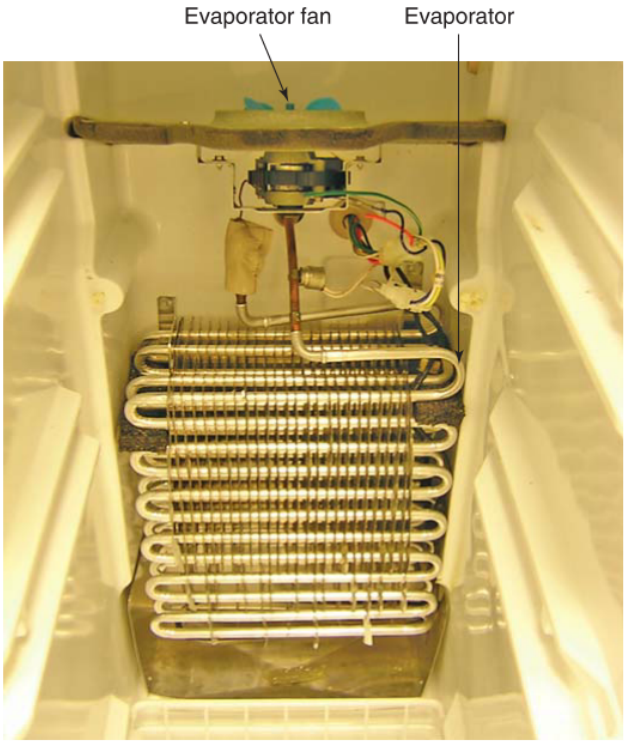

Maytag

Figure 24-12. Note the fins on the tubing of this fan-forced evaporator.

24.1.5 Heat Exchangers

Because of the cold temperatures in the conditioned space, there is very little heat available to boil refrigerant. In order to ensure the vaporization of R-134a (most common refrigerant currently used for domestic refrigerators), a very low pressure must be maintained in the evaporator. In order to attain an operating temperature found in a typical freezer compartment, this low pressure often needs to be a few pounds less than atmospheric pressure, a partial vacuum.

Another effect of the low operating temperatures is the presence of liquid refrigerant in the evaporator. Since low pressure causes refrigerant to collect in the coolest portion of the sealed system, there can be liquid refrigerant present in the evaporator while the compressor is off. To help prevent the return of liquid refrigerant to the compressor, a heat exchanger is used. The heat exchanger allows some of the heat from the high-pressure liquid in the capillary tube to transfer to the suction tube, vaporizing any liquid refrigerant that might be present.

A heat exchanger in a refrigerator-freezer has two purposes: it helps prevent the return of liquid refrigerant to the inlet of the compressor and provides subcooling to the liquid refrigerant before it enters the evaporator. The capillary tube (or the liquid line from the condenser to the metering device) and the suction line from the evaporator to the compressor are bonded together. Heat is transferred from the capillary tube or

Copyright Goodheart-Willcox Co., Inc.

liquid line to the suction line, thus lowering the temperature of the liquid refrigerant entering the evaporator and increasing the temperature of the refrigerant vapor leaving the evaporator.

24.1.6 Cooling Controls

Automatic refrigeration is designed to provide correct temperatures with the least amount of attention. If the unit were designed with a capacity that matches just its typical load, heavy loads would cause problems. The unit would over-refrigerate or would overheat from running all the time. To produce the proper temperatures under all conditions, a refrigerator-freezer needs more capacity than it will typically use.

In the northern temperate latitudes, domestic refrigeration units will run 35% to 40% of the time. In semitropical latitudes, units will run about 50% of the time. Since domestic refrigerators run 5 to 10 minutes and are then idle for 10 to 20 minutes, they are only in operation for 8 to 16 hours out of each day. The exact operating time is based on the average use of the cabinet and the ambient temperature.

A refrigerator in a room at 95°F (35°C) will run longer than the same refrigerator operating in a room at 75°F (24°C). Automatic-defrost refrigerators may run longer or more often than older manual-defrost models. Defrosting energy adds to the heat load.

Domestic refrigerator cabinets usually have a fixed temperature range between 37°F and 41°F (3°C and 5°C). The adjustment on the motor control allows the owner to select the desired temperature within this range.

Freezers should be set to operate at a temperature of 0°F (–18°C). The motor control must be designed for food freezer use. Most of these controls allow adjustment of the temperature range. The principle of operation of the motor control used on freezers is exactly the same as that used on domestic refrigerators.

Thermostats

The temperature in a domestic refrigerator-freezer is controlled by a thermostat. A thermostat will close its contacts as temperature rises and will open its contacts when the temperature drops to the desired range. Thermostats can be classified into two basic categories: electromechanical and electronic.

Electromechanical Thermostats

Electromechanical thermostats have a capillary tube that extends to a sensing bulb. The capillary tube and sensing bulb are often wrapped around a slug of metal. The slug of metal acts as a heat sink and helps to minimize dramatic swings in the temperature sensed. If the instantaneous temperature of the interior air were measured, the thermostat would cycle the compressor every time the door was opened. The slug of metal moderates these temperature swings so that the measured temperature more accurately reflects the actual temperature of the compartment contents, **Figure 24-13**.

As the temperature of the gas inside the sensing bulb changes, the pressure exerted by the gas on the diaphragm in the thermostat body also changes. If the gas warms enough, it causes the diaphragm to expand and close the contacts. As the compartment cools, the pressure in the sensing bulb decreases. This causes the diaphragm to relax and the contacts to open. The temperature adjustment mechanism usually consists of a cam, which the user adjusts by moving a lever or turning a knob. When the cam is rotated, it increases or decreases the amount of pressure required to close the contacts.

These types of controls can be affected by atmospheric pressure. As altitude increases, the pressure inside the sensing bulb is greater in comparison to the external pressure. A control adjusted for 36°F (2°C) at sea level will actually run colder at a higher altitude. Some controls have an adjustment to compensate for altitude. The customer may have to use trial and error to adjust the setting to achieve the desired temperature.

Most electromechanical controls require the user to set temperature by selecting from a range of numbers or letters rather than specific temperatures. Some controls list a range of one to seven, with seven being coldest. Other controls use a range of A through E, with A being coldest. These nonspecific temperature ranges require trial and error to find the desired temperature setting, **Figure 24-14**.

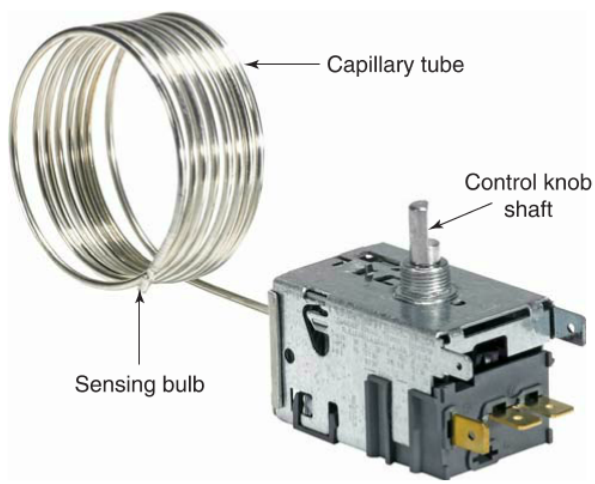

Danfoss

Figure 24-13. This electromechanical thermostat has a temperature sensing bulb that measures the temperature inside the cabinet.

Copyright Goodheart-Willcox Co., Inc.

Maytag

Figure 24-14. Various electromechanical controls used in domestic refrigerators and freezers.

Electronic Thermostats

Modern electronic thermostats provide direct sensing of interior temperatures with solid-state sensors. This type of sensor is most often a thermistor. A thermistor changes its resistance based on the temperature of the sensing device.

With thermistor temperature sensing, the sensing component is part of a voltage divider circuit. As the resistance of the sensor changes, the voltage sensed across the thermistor changes. This voltage across the thermistor is interpreted as an instantaneous temperature reading. Instead of using a slug to moderate temperature swings, the temperature readings are averaged over a predetermined time period. This provides the compressor control with a running average of the temperature. Decisions to energize the compressor are based on a mathematical formula.

Electronic controls may use push button and include 7-segment LED displays of temperature. Others display numbers along a range of operation, like some electromechanical controls. Shown here are two examples of electronic controls, **Figure 24-15**.

24.2 Specialized Systems

The following systems are commonly found on domestic refrigerators and freezers. Some of these systems, like the damper, defrost, and condensation controls keep the refrigerator performing properly. Other systems, like ice makers and ice and water dispensers, add convenience.

24.2.1 Dampers

There may be more than one compartment in the refrigerator. The amount of air flowing between the compartment containing the evaporator and the other compartment will determine the temperature in the compartment without the evaporator. If the evaporator is in the freezer compartment and the temperature for energizing the compressor is monitored in the freezer compartment, the amount of air flowing between the freezer and the fresh food compartment will determine the temperature in the fresh food section. The larger the amount of air allowed to flow between the compartments, the lower the temperature in the fresh food compartment.

A damper controls the amount of air flowing between the compartments. In some designs, the damper is a fixed device. A certain amount of air flows into the fresh food section whenever the evaporator fan is operating. If the customer wants the fresh food section to be cooler, the damper is manually opened further. If the fresh food section is too cold, the damper is manually closed further.

Maytag

Figure 24-15. Various electronic controls used in domestic refrigerators and freezers.

Copyright Goodheart-Willcox Co., Inc.

In newer designs, the damper is equipped with a temperature-sensing device that automatically opens and closes the damper as needed. Many dampers are pneumatic. They require no electrical power to open and close the damper. A sensing bulb containing a gas charge pressurizes a diaphragm. As the sensing bulb temperature changes, the damper opens or closes in response to the change, **Figure 24-16**.

This style of damper provides more active control of the two separate compartments than a manually adjusted damper provides. If the frozen section requires cooling but the fresh food section does not, the damper can remain closed. When the damper is closed, the system needs to do less work to bring the freezer section down to the desired temperature. In cases where the fresh food section requires additional cooling, the damper can open without the compressor cycling. Natural convection will transfer some of the heat from the fresh food section to the freezer section. If enough heat can be moved to satisfy the damper setting without the compressor cycling, the system is more efficient. If, however, enough heat is transferred to activate the thermostat, the compressor will operate based on the freezer temperature. The damper may close before the operating thermostat is satisfied.

In electronic temperature control systems, the damper is often electrically operated. An electrical signal is sent to the damper to indicate when it should be open and when it should be closed. Usually there are limit switches to indicate whether the damper is fully opened or fully closed. The opening and closing of an electronic damper in a solid-state temperature management system is controlled by a mathematical formula, **Figure 24-17**.

24.2.2 Defrost Systems

Moisture control inside the conditioned compartments is necessary for efficient refrigerator-freezer operation. Every time a door is opened, moisture from ambient air enters the cabinet. Through either natural convection or forced air movement, the moisture eventually condenses on the coldest surface in the cabinet. The coldest surface is the evaporator. Since the evaporator in a refrigerator-freezer or freezer is well below the freezing point of water, the moisture forms frost on the evaporator.

A plate-style evaporator relies on convection to maintain temperature. Frost build-up affects the efficiency of the heat removal but does not prevent the system from maintaining temperature. However, there is the loss of storage space as the thickness of the frost increases.

In a forced-draft evaporator system, the build-up of frost has more severe effects. As the amount of frost builds, the airflow through the evaporator decreases. If the evaporator becomes completely clogged, the airflow stops completely. If this happens, cooling performance decreases to the point where the system cannot maintain the desired temperatures. In order to return cooling capacity, the frost must be removed from the evaporator.

The process of manually defrosting a refrigerator is time consuming, and the frost affects system

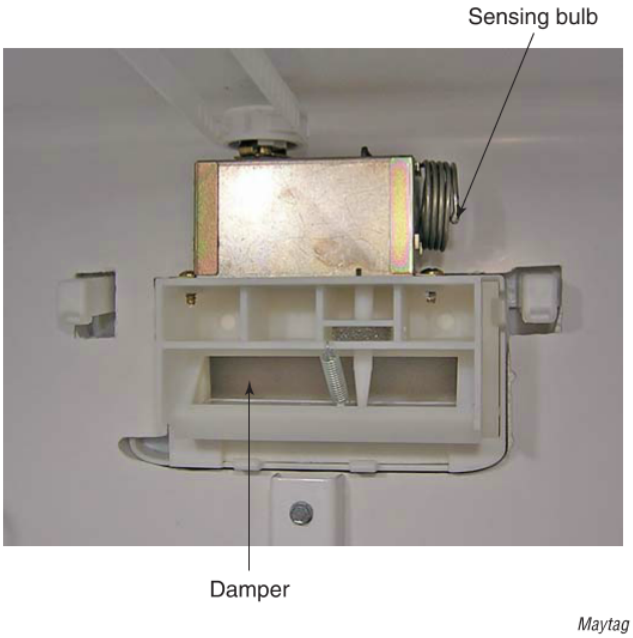

Maytag

Figure 24-16. This mechanical damper opens and closes in response to pressure changes in a sensing bulb.

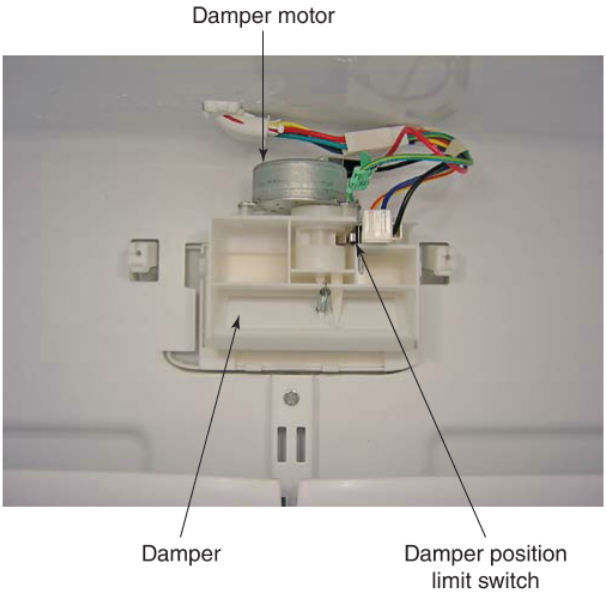

Maytag

Figure 24-17. An electric motor opens and closes this damper. When the desired position is reached, the limit switch deactivates the motor.

8

Copyright Goodheart-Willcox Co., Inc.

efficiency. Therefore, most modern refrigerators incorporate an automatic defrost system. Two methods of producing heat for defrost are hot gas and electric. Hot gas redirects refrigerant from a compressor's discharge line through the evaporator. Electric uses electric heating elements located next to the evaporator surfaces.

In an ***automatic defrost system***, a timer or control mechanism operates the heating mechanism during the refrigeration system's Off cycle, which melts any built-up frost or ice on the evaporator. The moisture empties into a drain pan, which is either emptied by evaporation or drains into a building drain. **Figure 24-18** shows an automatic defrost system in a basic refrigeration system.

A defrost thermostat monitors the evaporator temperature during the defrost cycle. If the evaporator temperature exceeds a preset level, the thermostat

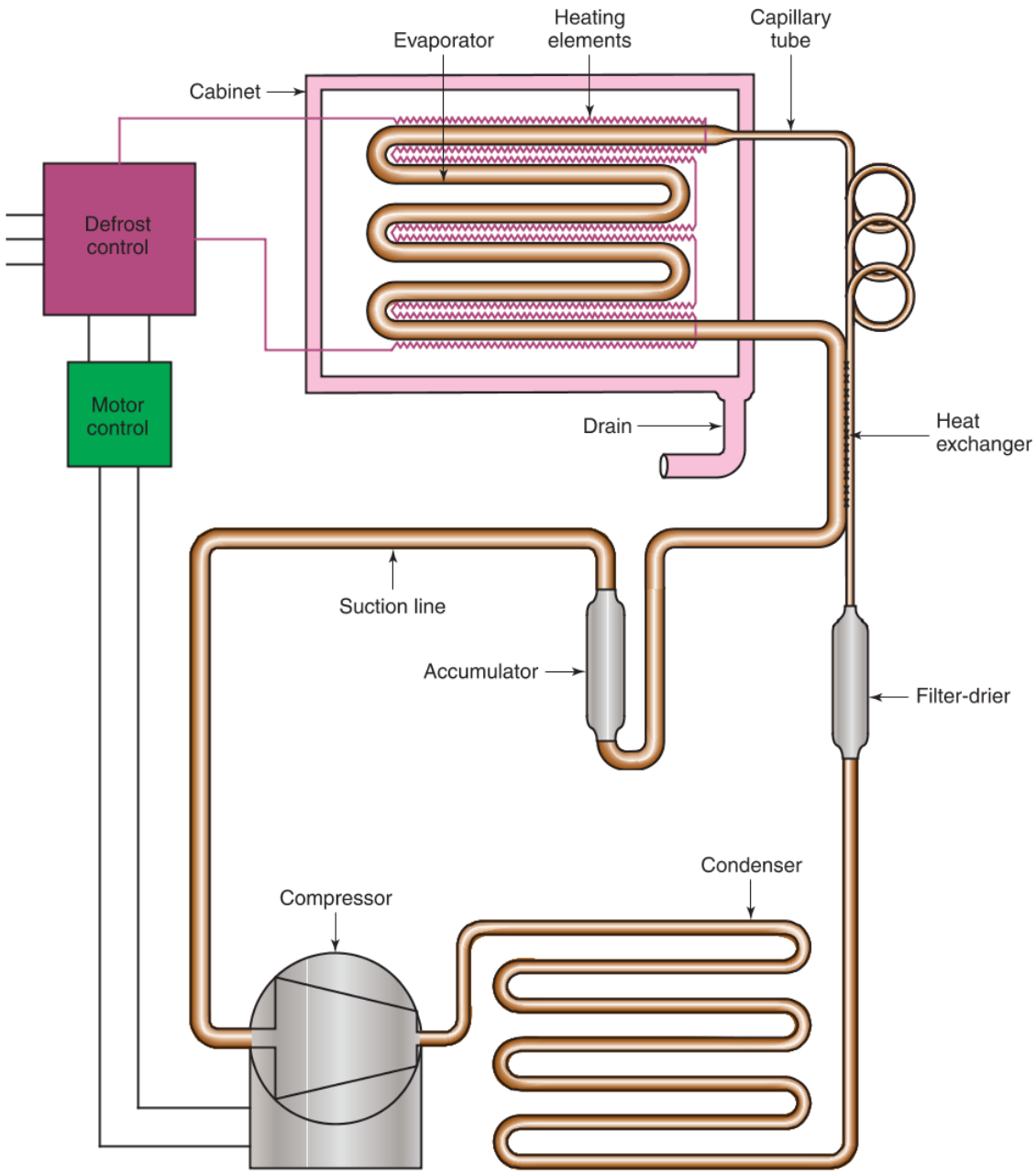

Goodheart-Willcox Publisher

Figure 24-18. In this basic electric defrost system, the defrost control energizes the heating elements when the compressor shuts off.

Copyright Goodheart-Willcox Co., Inc.

turns off the electric heater, regardless of the amount of time left on the defrost cycle. A defrost thermostat may also be referred to as a *defrost termination thermostat* or *defrost terminator*. It prevents the defrost heaters from overheating the evaporator during the defrost cycle, **Figure 24-19**.

The target temperature for defrost is usually between 40°F and 50°F (4°C and 10°C). The water that results from the defrosting process is often directed to a condensate tray in the base of the refrigerator. This flat tray is placed in the airflow around the compressor and the condenser. The warmed air speeds the evaporation of the condensate.

Although the purpose and operation of all defrost systems are similar, the method of controlling the system can vary. The following sections address the most common methods of controlling a defrost system.

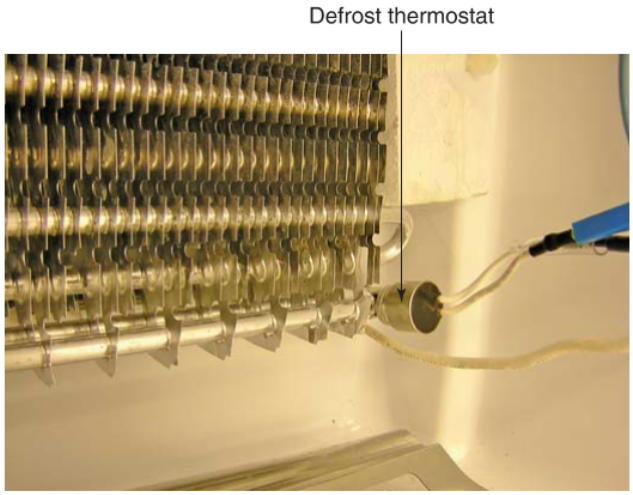

Maytag

Figure 24-19. A defrost thermostat monitors evaporator temperature and deactivates the defrost process if the evaporator gets too warm.

Timed Defrost

One method of controlling a defrost cycle is to use an electric *defrost timer* that defrosts the unit at predetermined time intervals. An interval between defrosts is set by the user. Whenever the timer counts up the chosen amount of time, the system enters a defrost cycle. This type of controller performs the defrost cycle based solely on elapsed time, regardless of the actual cooling demand on the system.

The frequency and duration of the defrost cycle are controlled to provide adequate frost removal from the evaporator. A defrost timer like the one shown in **Figure 24-20** has controls for setting the defrost frequency and duration.

A wiring diagram for a three-step timed defrost system is shown in **Figure 24-21**. This system shuts off the compressor and the evaporator fans and then starts the electric heaters. After the heaters run for about sixteen minutes, a defrost timer shuts them off and restarts the compressor. When the compressor has run about four minutes, the defrost timer starts the evaporator fans, returning the unit to normal operation.

The most basic type of timed defrost system uses a ***continuous defrost timer***. This type of defrost timer continuously counts down to the next defrost cycle, regardless of whether the compressor is running or not. As a result, the system performs regular defrosting, but some of these may be unnecessary defrosting operations.

A more efficient type of timed defrost is the ***cumulative run-time defrost system***. This type of system determines the defrost intervals based on the amount of time the compressor runs. The system is controlled by an ***intermittent defrost timer***, which counts down to the next defrost cycle only when the compressor is running. During Off cycles, an intermittent defrost

Sealed Unit Parts Co., Inc.

Figure 24-20. This defrost timer operates the defrost cycle in a three-step, no-frost refrigerator. The timer shown allows the user to set a defrost duration between 10 and 35 minutes and a defrost frequency between 4 hours and 12 hours.

Copyright Goodheart-Willcox Co., Inc.

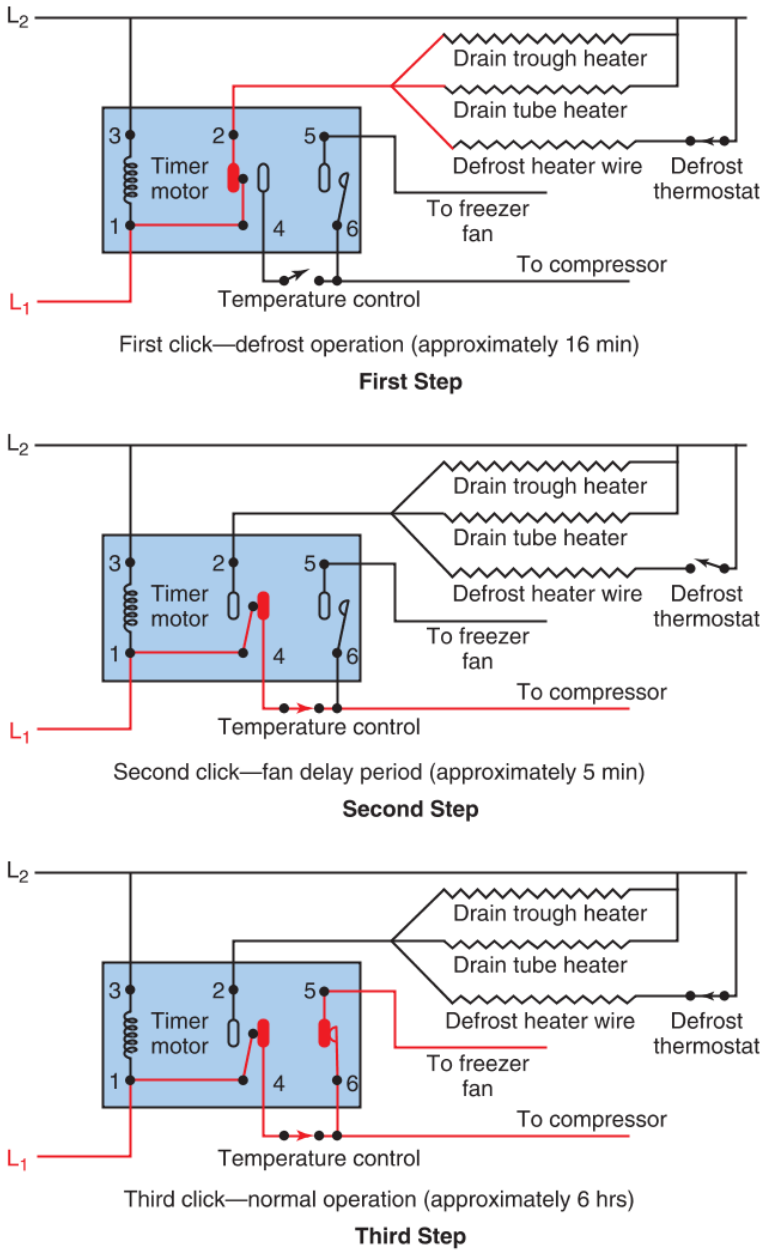

Goodheart-Willcox Publisher

Figure 24-21. These diagrams show the electric circuits that are activated during each step of a three-step defrost method. First step—Timer stops the compressor and the freezer fan, then turns on the three heaters. If the temperature exceeds the defrost thermostat's limit, the thermostat will open, shutting off the defrost heater. The drain heaters will continue to operate until the defrost time expires. Second step—Timer stops the heaters and starts the compressor, but the freezer fan does not yet start. Third step—The compressor continues to run, and the freezer fan is turned on.

timer is idle. The timer shuts off the compressor and activates the defrost cycle after the compressor has run for a cumulative predetermined number of hours.

A cumulative run-time defrost system is more efficient than a continuously timed defrost system. However, it still cannot account for the number of times the doors are opened and for the relative humidity of the surrounding air.

Demand Defrost

When a cabinet door is opened, some of the conditioned air inside the cabinet spills out and is replaced

Copyright Goodheart-Willcox Co., Inc.

by humid air from outside the cabinet. The humidity turns to frost on the cold evaporator. Because of this, the more frequently the door is opened, the more frequently the unit must be defrosted. For this reason, some units are equipped with a demand defrost controller instead of a defrost timer. A ***demand defrost controller*** activates the defrost cycle based on the number of times the cabinet door is opened.

Off-Cycle Defrost

The Off-cycle defrost system is used on refrigerators equipped with forced-draft evaporators. This type of system has no heating elements and relies on air circulation to defrost the evaporator. The defrost controller activates the defrost cycle during each Off cycle, whether the evaporator has frosted over or not. For the defrost cycle of Off-cycle defrost, the evaporator fan continues to circulate return air around the evaporator coil. Any frost formation is melted by circulating cabinet air releasing its heat into the frost. This reduces frost build-up on the evaporator. Since the circulating air must be warmer than 32°F (0°C), this type of defrost system *cannot* be used to defrost freezers.

Adaptive Defrost

With the decreased cost of logic circuits and controllers, a more efficient method of controlling the defrost frequency has been introduced. The system measures the time it takes to defrost the unit and then uses that information to determine the interval before the next defrost cycle. This type of defrost system is known as ***adaptive defrost***.

The theory behind an adaptive defrost system is that an evaporator with a heavier frost load takes longer to reach the target defrost temperature than an evaporator with a light frost load. The defrost controller calculates a defrost interval that results in the evaporator developing a frost load that is just heavy enough to require a defrost cycle but not so heavy that it affects the evaporator's efficiency.

After power is applied to an adaptive defrost system, the initial defrost will usually occur in six to eight hours of cumulative run time, depending on the manufacturer. The amount of time is then measured from the start of the defrost cycle until the defrost thermostat opens. If the defrost cycle takes longer than the ideal defrost time, it indicates that a heavier-than-normal frost load was on the coil. With a heavier-than-normal frost load, the system calculates that the next defrost should happen sooner than the initial cumulative run time. As a result, the cumulative run time before the next defrost is shortened. When the next defrost cycle begins, the defrost controller again monitors the time required to complete the defrost cycle.

If the defrost thermostat opens sooner than the ideal defrost time, it indicates that the system can operate for a longer period of compressor run time before defrosting is required. The defrost control lengthens the cumulative run time before the next defrost cycle and begins monitoring the compressor run time.

Over the course of several defrost cycles, the time between the start of the defrost cycle and the opening of the defrost thermostat will get closer to the ideal defrost time. The system adjusts the intervals between defrost cycles to be short enough to maintain a clean coil, but not so short that energy is wasted performing unnecessary defrosts. As humidity conditions change and the frost load increases or decreases, the system adjusts the cumulative run time to match the change in the frost load.

Hot-Gas Defrost

A defrost system that is seen less frequently in domestic appliances is the *hot-gas defrost* system. This type of defrost system redirects hot, compressed vapor from the compressor through the evaporator to defrost it. Hot gas defrost systems are more commonly used in commercial refrigeration systems and in commercial ice machines to aid the harvest process.

When hot-gas defrost is used in a domestic refrigerator or freezer, the system includes a bypass line that connects the compressor discharge line to the evaporator inlet. A solenoid-operated bypass valve is installed in this line, **Figure 24-22**.

Emerson Climate Technologies

Figure 24-22. A solenoid valve operates a defrost bypass line by opening a passage between a compressor's discharge line and evaporator. Check with the solenoid valve's manufacturer to ensure it is installed in an acceptable position for proper operation.

Copyright Goodheart-Willcox Co., Inc.

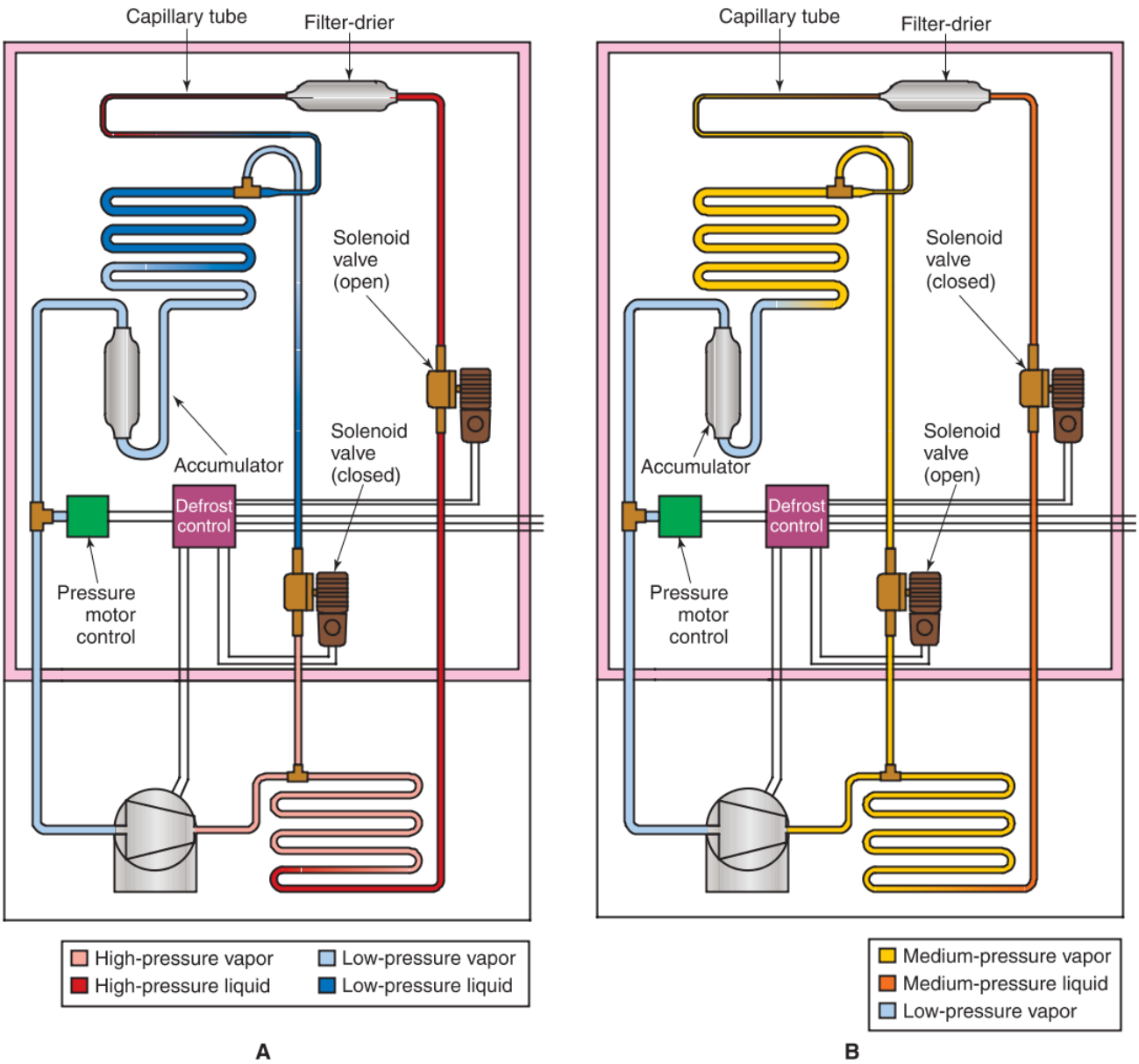

Goodheart-Willcox Publisher

Figure 24-23. Diagram of a basic hot-gas defrost system. A—During standard operation, the solenoid valve in the bypass line is closed and the solenoid valve in the liquid line is open. B—During the defrost cycle, the solenoid valve in the bypass line is open, and the valve in the liquid line is closed.

During normal operation of the system, the solenoid valve remains closed. When the defrost timer triggers the defrost cycle, the valve opens and hot gas enters the evaporator at a point just after the capillary tube inlet. The hot gas thaws the frost from the inside. One concern with this type of system is that it adds a component to the basic refrigeration system, and any added components are potential sources of system failures and increase the cost of the unit.

In a refrigerator or freezer equipped with a hot-gas defrost system, two solenoid valves in the refrigerant circuit open and close to provide either the refrigerating cycle or the defrost cycle. During the refrigerating cycle, the solenoid valve in the liquid line opens and the solenoid valve in the bypass line remains closed. When the valves are in these positions, the refrigerator operates normally, **Figure 24-23A**.

During the *defrost cycle*, the solenoid valve in the liquid line closes, and the solenoid valve in the bypass

Copyright Goodheart-Willcox Co., Inc.

line opens. Since the solenoid valve in the liquid line is closed, no liquid refrigerant is flowing through the metering device into the evaporator. Since the solenoid valve in the bypass line is open, hot compressed refrigerant vapor flows through it directly into the evaporator. It passes through the evaporator, through the accumulator, and back through the suction line to the suction side of the compressor. As it passes through the evaporator, the hot vapor melts the ice from the evaporator surface, **Figure 24-23B**.

The vaporized refrigerant picks up some heat as it passes through the suction line. As it passes through the compressor, the heat of compression raises the temperature of the refrigerant enough that it continues to heat the evaporator and remove the frost. Little or no condensation of vaporized refrigerant takes place during this cycle.

Semiautomatic Defrost

Some domestic refrigerators use semiautomatic defrost systems. These systems defrost the unit when the user presses the button on a defrost switch and then return the unit to regular operation automatically after the unit has defrosted.

A second type of semiautomatic defrost system raises the operating temperature of the evaporator a fixed amount when a defrost switch is pressed by the user. When the defrost operation is triggered, the evaporator temperature becomes warm enough to cause defrosting while still providing satisfactory refrigeration. Pulling on the switch returns the system to regular operation.

Refrigerators with semiautomatic defrost systems frequently use a motor control with two sensing elements. One sensing element controls the compressor motor during the normal refrigeration cycle by using pressure within a gas-charged sealed capillary tube. As the temperature in the refrigerated space rises, the gas within the capillary tube expands and pushes on a diaphragm, which in turn closes a set of electrical contacts, starting the compressor motor.

Another sensing element provides motor control during the defrost cycle. It uses a gas-charged capillary tube to automatically terminate the defrost cycle. When the frost is removed from the evaporator coil, the increase of coil temperature expands the gas in the capillary tube, which pushes on a diaphragm and opens the defrost contacts while simultaneously closing the contacts to the compressor motor.

Defrosting starts when the control knob is pushed in. If the defrost system uses electric heaters, the controller opens the motor circuit and closes the circuit to electric heater elements. When the coils are defrosted, the controller opens the defrost circuit and closes the motor circuit. See **Figure 24-24**.

If the defrost system is a hot-gas defrost system, the controller keeps the compressor circuit closed when the user activates the defrost cycle but also closes a circuit to the solenoid valves. This causes the compressor to begin pumping hot gas through the evaporator. When the defrost operation is complete, the controller opens the solenoid valve circuit and restores normal control of the compressor motor. See **Figure 24-25**.

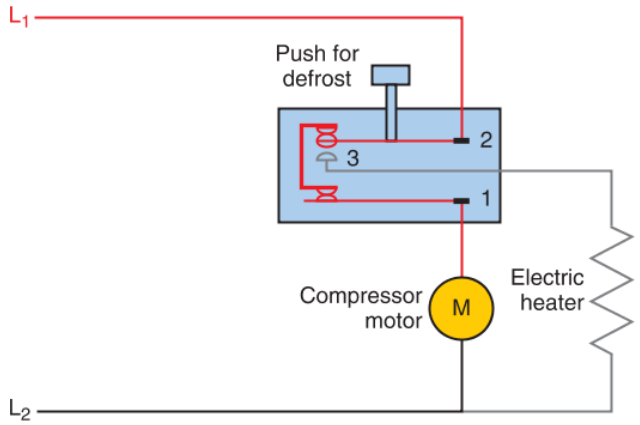

Goodheart-Willcox Publisher

Figure 24-24. This wiring diagram is for the control in a semiautomatic defrost system with an electric heater. The control is shown in the normal operation refrigeration position.

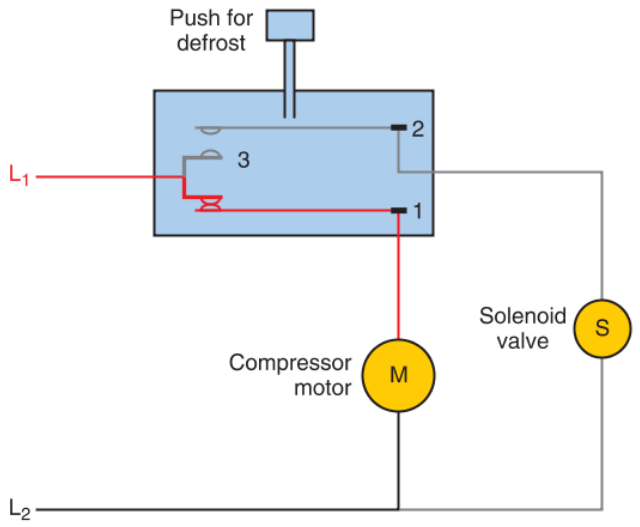

Goodheart-Willcox Publisher

Figure 24-25. Wiring diagram for the control in a semiautomatic hot-gas defrosting system. The control is shown in the normal operation refrigeration position. The defrost system has a solenoid valve that controls the flow of hot gas.

Copyright Goodheart-Willcox Co., Inc.

24.2.3 Condensation Control

Because cabinets have cold interiors and are surrounded by warmer, more humid air, there is always the potential for condensation on the cabinet exterior. This is most likely to occur around the doors and especially between the frozen food section and fresh food section in a refrigerator-freezer. Moisture on the exterior of the cabinet is undesirable but in certain conditions cannot be avoided.

In order to reduce the moisture that collects on the exterior of the cabinet, most manufacturers use some form of condensation control. Condensation controls consist of a heating system that keeps the exterior surfaces of the cabinet warm enough to prevent humidity in the air from condensing on them. One method of condensation control consists of low-wattage electric heaters installed around the door openings. These heaters are commonly referred to as ***mullion heaters***.

A different type of moisture control uses heat produced during the compression of the system's refrigerant. In this type of system, a loop of copper or steel tubing passes around the door openings. Refrigerant leaving the condenser is routed through this loop. The warm refrigerant heats the cabinet exterior where condensation could develop. Since the operating characteristics of a sealed system results in higher high-side pressures as the ambient temperature increases, the temperature of the refrigerant routed through this loop will increase in warmer conditions. This type of condensation control is called a ***post-condenser loop***, or ***Yoder loop***. See **Figure 24-26**.

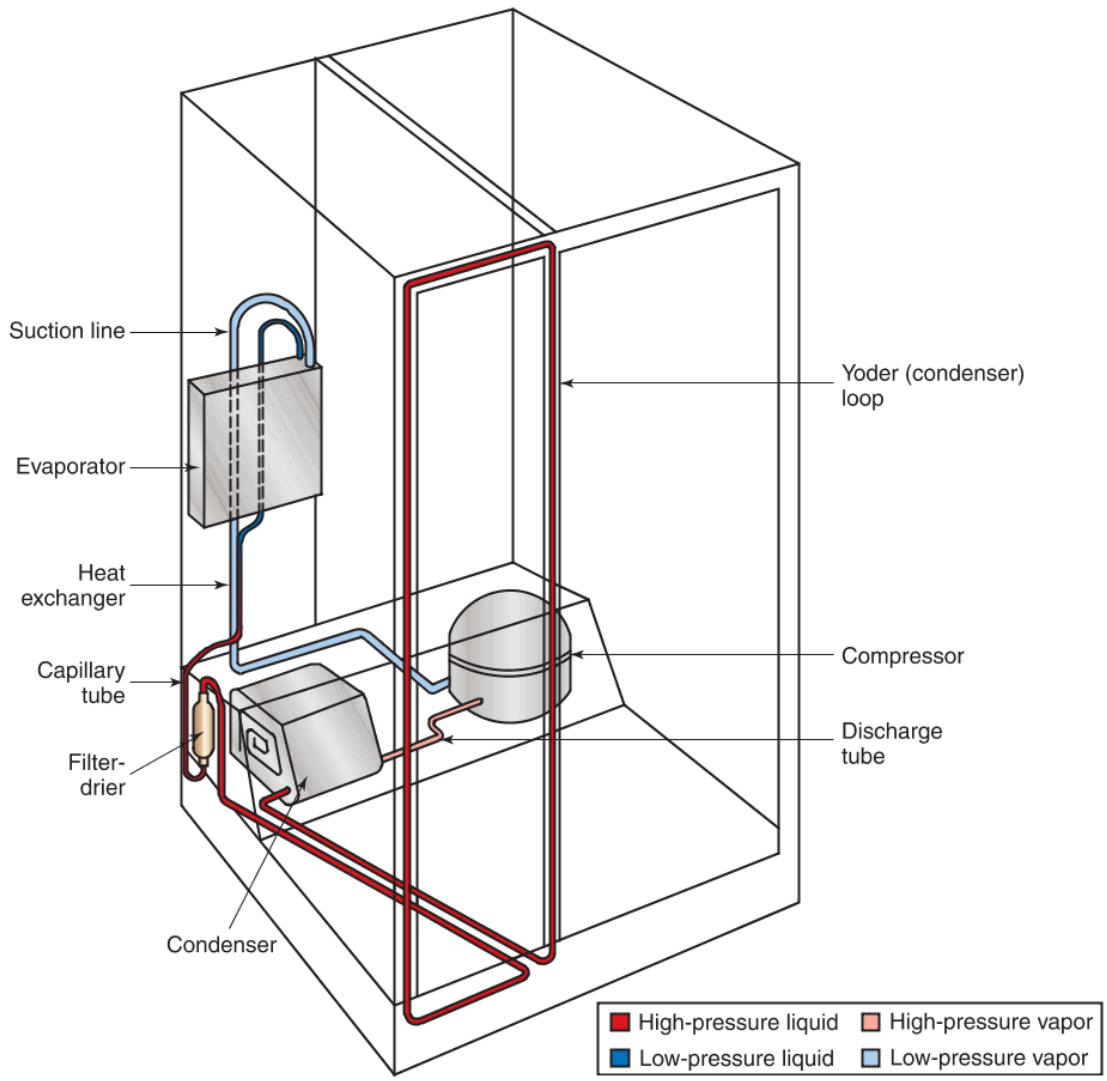

Maytag

Figure 24-26. A post-condenser loop, or Yoder loop, provides condensation control in this design.

Copyright Goodheart-Willcox Co., Inc.

24.2.4 Crispers and Humidity-Controlled Drawers

Many refrigerators include drawer compartments for storing produce. Since the evaporator removes moisture from the interior air, produce tends to quickly dry and wilt. Crisper drawers reduce the airflow around the produce and create a more humid storage location, preventing premature drying.

Most crisper drawers have some type of slide control that adjusts the amount of air that will flow through the drawer. Vegetables are best kept at higher humidity levels than fruits. Many of these slide controls use pictures to indicate higher humidity for vegetables and lower humidity for fruits. Others just use word labels, **Figure 24-27**.

Some cabinets include a drawer specifically intended for meat storage. This drawer is usually located in the bottom of the fresh food section. This is the coldest portion of the fresh food section. Often a small supplemental air duct supplies cold air directly from the evaporator to this area. Meat, once thawed, can be stored at or slightly below freezing temperatures and still be ready to use.

More advanced refrigerator storage options can incorporate dampers, low-wattage heaters, and circulation fans into interior storage drawers. These climate-controlled storage drawers are smaller conditioned spaces within the fresh food section. They can be controlled to be slightly cooler or slightly warmer than the rest of the refrigerator section. The primary refrigerator compartment can be set to maintain a temperature of 35°F (2°C), while the storage drawer could maintain 38°F (3°C) for produce, or 30°F (–1°C) for meat, **Figure 24-28**.

24.2.5 Ice and Water Systems

Many domestic refrigerator-freezers are equipped with systems for automatically making ice and for dispensing drinking water and ice. Each of these systems requires a connection to the household water supply. The following sections describe some of the most common types of ice and water systems.

Automatic Ice Makers

Many domestic refrigerators are equipped with automatic ice makers. The automatic ice maker is mounted in the freezer compartment. It is designed to produce ice cubes automatically. A typical ice maker is wired so that it will harvest in the refrigeration or defrost cycles. A solenoid water valve in the compressor compartment regulates the flow of water from the water supply into the ice mold. **Figure 24-29** shows the external construction of a typical ice maker, and its component parts are shown in **Figure 24-30**.

Most ice makers are self-contained modules. The amount of water that is used during a fill is usually time-based. The action of the ice maker's solenoid water valve

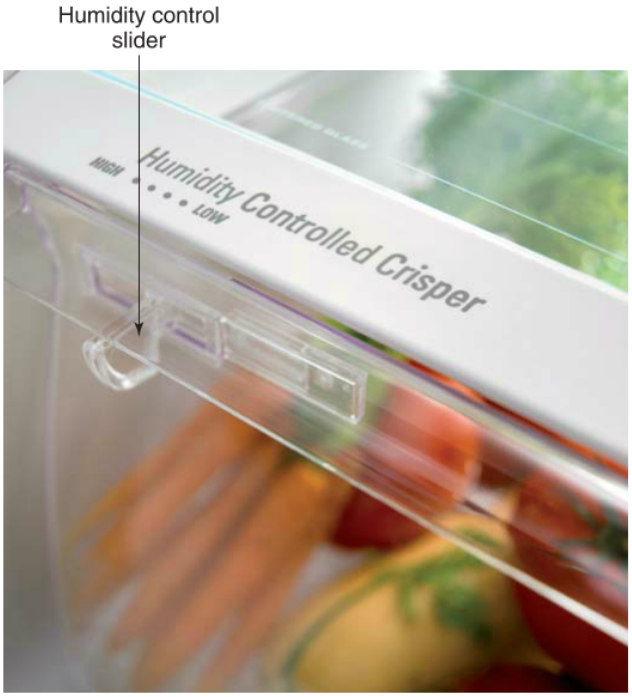

Maytag

Figure 24-27. This crisper drawer is equipped with a slider to adjust airflow. The user moves the slider to the left to increase humidity.

Jenn-Air

Figure 24-28. A climate-controlled drawer. The controls allow the user to select any of four preset conditions, depending on the type of food stored in the drawer.

Copyright Goodheart-Willcox Co., Inc.

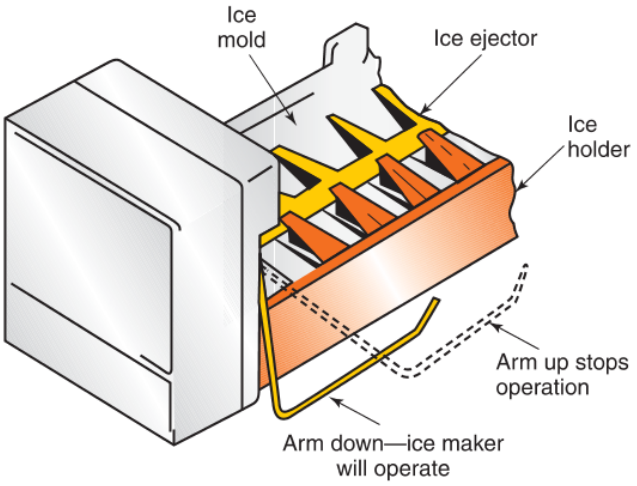

Frigidaire Company

Figure 24-29. One type of ice maker used on domestic refrigerators is shown here. Note the signal arm, which stops the cycling when the ice bin is full.

is often controlled by a mechanical timing device inside the ice maker. The timing device includes a rotating cam that operates the switches inside the ice maker. A solid state control board can also be used to control the fill time. Since time and volume of water flow are the factors that determine the size of the ice cubes, the household water pressure is important. Excessive pressure could overfill the ice mold while low pressure could under fill the mold, resulting in small or hollow cubes.

An automatic ice maker has three phases: fill, freeze, and harvest. During the fill phase, the ice maker mold fills with water. During the freeze phase, the system waits for the water to freeze. A thermostat mounted to the ice mold monitors the temperature of the mold. Once the water freezes, the temperature of the mold starts dropping rapidly. Once the designated temperature is reached, the system is ready to enter the harvest phase.

A signal arm on the ice maker continuously measures the level of harvested ice in the ice bin. If the ice bin

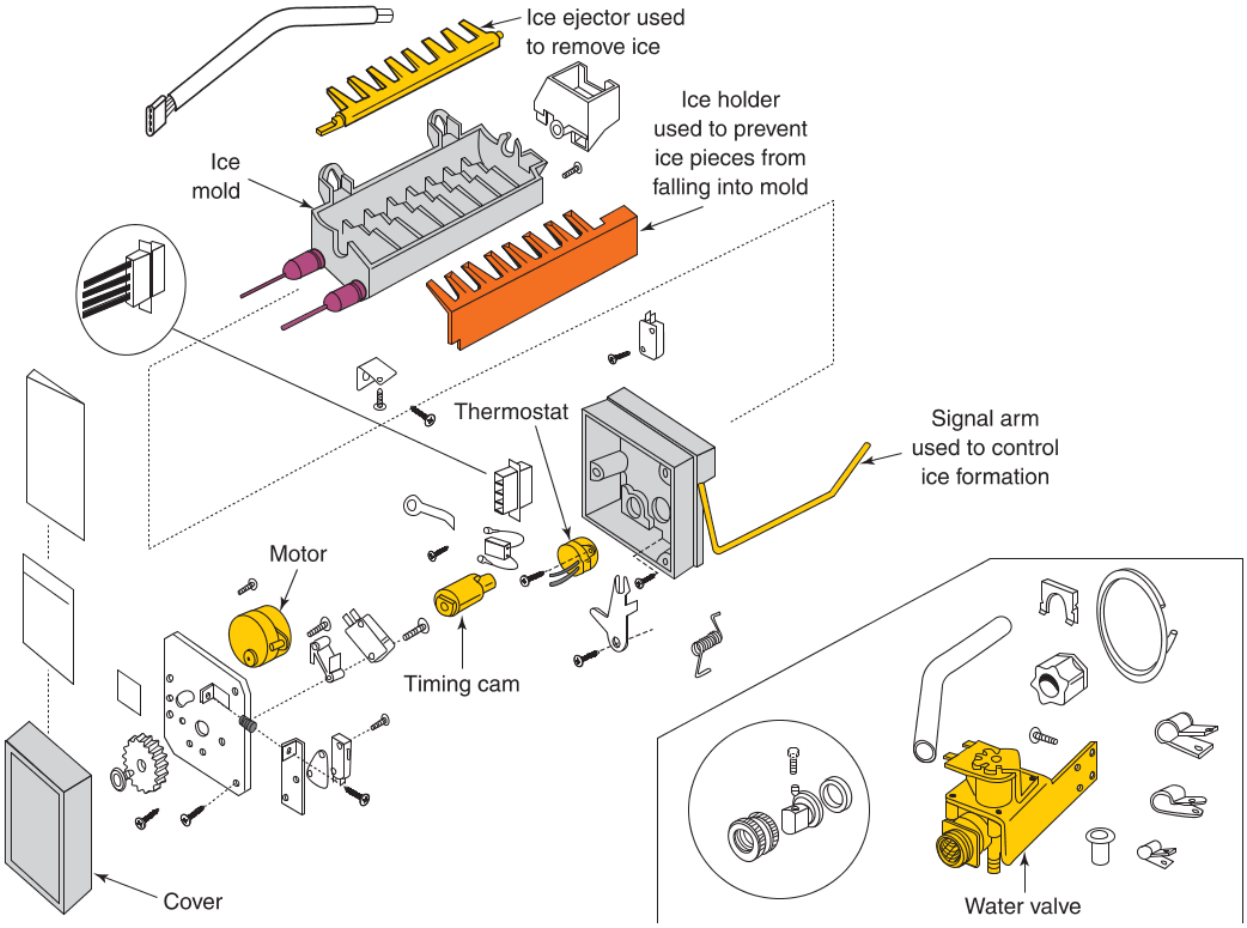

Frigidaire Company

Figure 24-30. These are the parts that make up a typical ice maker.

Copyright Goodheart-Willcox Co., Inc.

is full, the ice maker will hold position between the freeze and harvest phase until the ice level has decreased. If the bin is not completely full, the ice maker will switch from the freeze phase to the harvest phase.

The ice molds in many ice makers include a heater to loosen the ice. If the ice maker is equipped with a heater, it will energize to loosen the ice when the harvest phase begins. Next, a motor is activated to drive the ice from the mold. Depending on the ice maker model, the motor will either rotate fingers that push the cubes out of the mold or flip and twist a flexible tray until the ice cubes fall out. When the ice cubes have been removed, the ice maker returns to the fill phase and starts the process over.

A typical ice mold has a thermostat installed in its front surface. It also has semicircular compartments where the ice is formed. The water enters through the rear and fills each compartment. If the ice maker is equipped with a mold heater, it is attached on the lower side of the ice mold. The mold heater is wired in series with the ice maker thermostat, **Figure 24-31**.

The ***ejector*** pushes the ice out of the mold when it is frozen. The signal arm raises and lowers as the timing cam rotates. When the bin is full of ice, the signal arm is unable to lower and keeps the shutoff switch open. The shutoff switch remains open and the ice maker remains inactive until enough ice is removed from the bin to allow the signal arm to lower and close the shutoff switch, **Figure 24-32**.

The operation of an ice maker can best be understood by following its operation step-by-step. With water already in the mold, the freeze phase begins with all components de-energized, **Figure 24-33**.

Maytag Corporation

Figure 24-32. This automatic ice maker will continue making ice until its signal lever is raised.

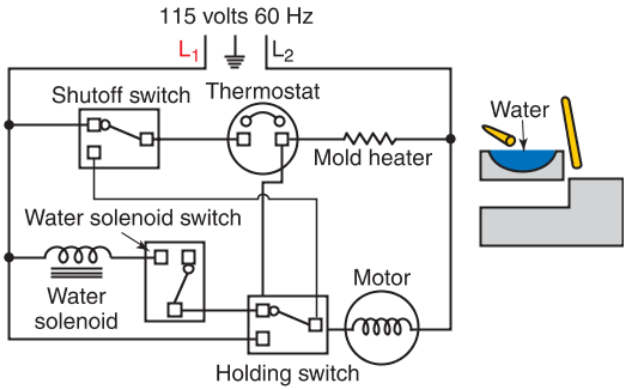

Frigidaire Company

Figure 24-33. During the freeze phase, all components of the ice maker are de-energized.

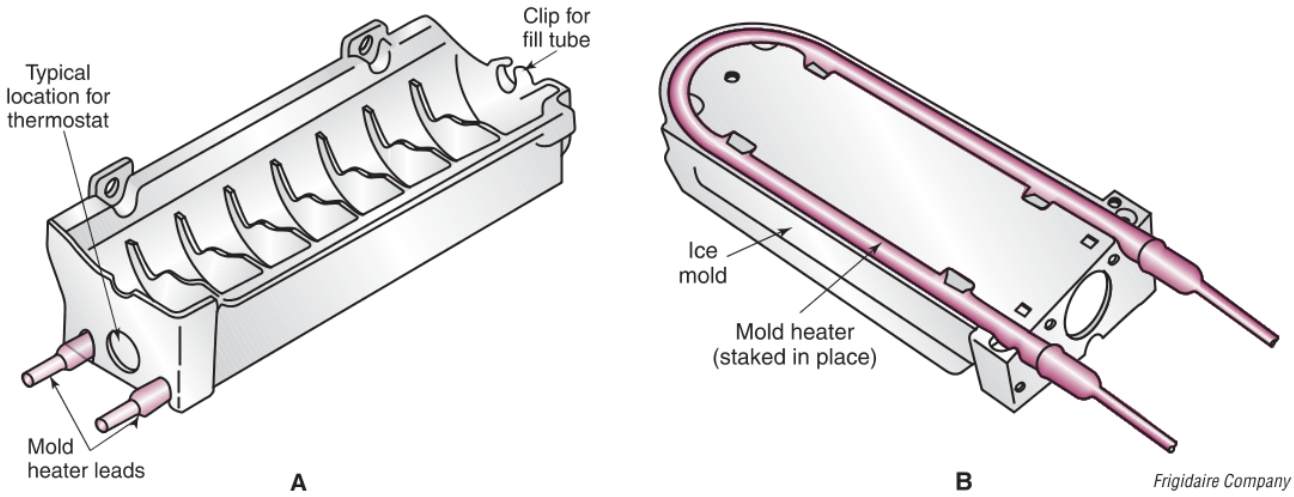

Frigidaire Company

Figure 24-31. The top and bottom of a typical ice mold are shown here. A—Dividers separate the individual semicircular compartments where ice cubes are formed. Note that the back of each divider is lower than the front to allow water to be distributed to all compartments. B—The mold heater is attached to the bottom of the ice mold.

Copyright Goodheart-Willcox Co., Inc.

The start of the harvest phase is shown in **Figure 24-34**. The ice in the mold lowers the temperature of the thermostat so that its contacts close. This energizes the mold heater and ejector motor. The ejector blades begin to turn slowly.

In **Figure 24-35**, the motor rotates for a few degrees, and a timing cam connected to the motor changes the holding switch position. The motor keeps turning, and the mold heater remains on through the thermostat circuit.

In **Figure 24-36**, the signal arm is raised by the timing cam and operates the shutoff switch. The signal arm begins moving back down, and the ejector blade contacts the ice in the mold and stalls. The mold heater keeps warming the mold. The blade remains in this position until the ice has thawed loose.

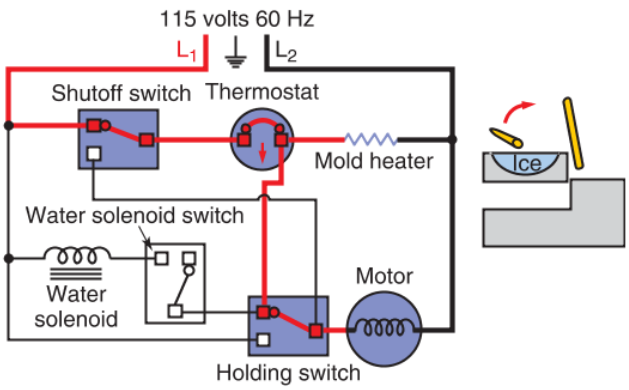

Frigidaire Company

Figure 24-34. When the ice freezes and further chills to the appropriate temperature, the thermostat's contacts close, energizing the mold heater and the motor. The ejector blades begin to turn. This begins the harvest phase.

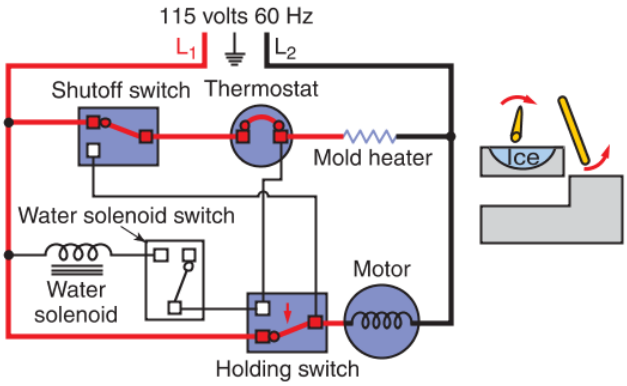

Frigidaire Company

Figure 24-35. The motor rotates the timing cam, which operates the holding switch and moves the sensing arm into the up position. The mold heater remains energized through the thermostat.

In **Figure 24-37**, the thermostat is still closed, and the mold heater is still functioning. The first revolution is nearly completed, and the timing cam closes the water valve solenoid and its switch; however, the water solenoid does not open its valve. Because the electrical path through the thermostat and heater have lower resistance than the path through the solenoid, most of the current flows through the heater. Remember that electrical current always prefers the path of least resistance. As a result, not enough current flows through the water solenoid to cause it to open the water valve.

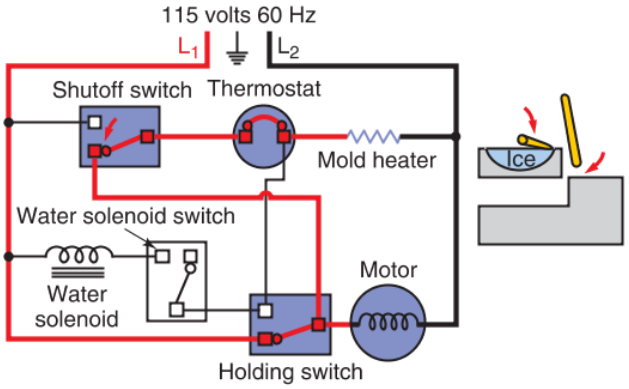

Frigidaire Company

Figure 24-36. As the timing cam continues to turn, the sensing arm moves to the fully up position, which operates the shutoff switch. The signal arm begins to move back down. When the ejector blades reach the ice mold, the motor stalls. The system remains in this position until the ice thaws loose. During this time, the mold heater remains energized.

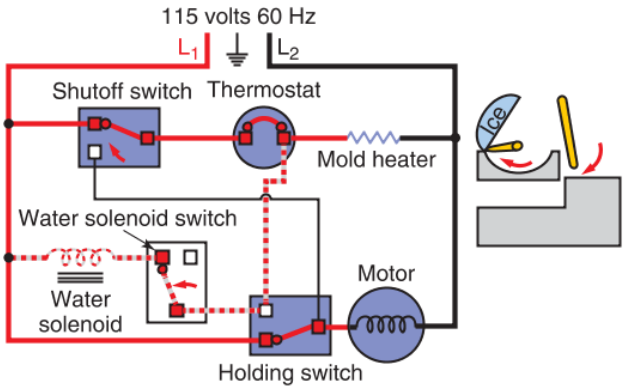

Frigidaire Company

Figure 24-37. When the sensing arm returns to its fully down position, it again operates the shutoff switch. The ejectors push the ice cubes out of the mold. The timing cam closes the water solenoid switch. However, there is not enough current passing through the water solenoid switch to activate the water valve solenoid. This nearly completes the first revolution of the ice maker timer cam.

Copyright Goodheart-Willcox Co., Inc.

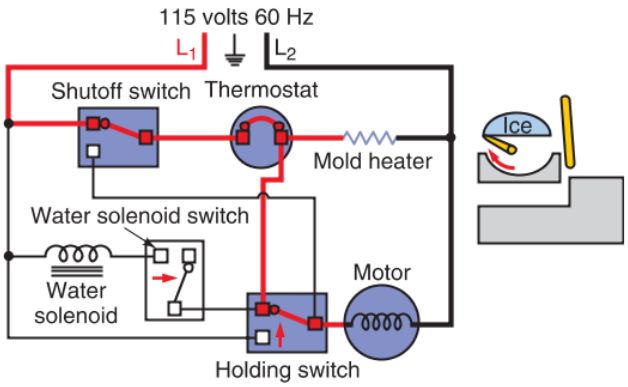

Frigidaire Company

Figure 24-38. At the end of the first revolution, the timing cam operates the holding switch. However, since the thermostat is still closed and energizing the motor, a second revolution of the timing cam begins.

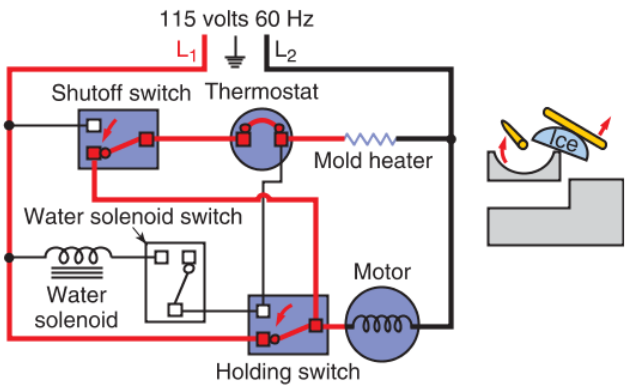

Frigidaire Company

Figure 24-39. After a few degrees of rotation, the timing cam closes the holding switch, providing a power input to the motor after the shutoff switch changed position. The mold heater remains energized. The signal arm raises and lowers again, operating the shutoff switch. The ice harvested during the first revolution is dumped into the ice bin.

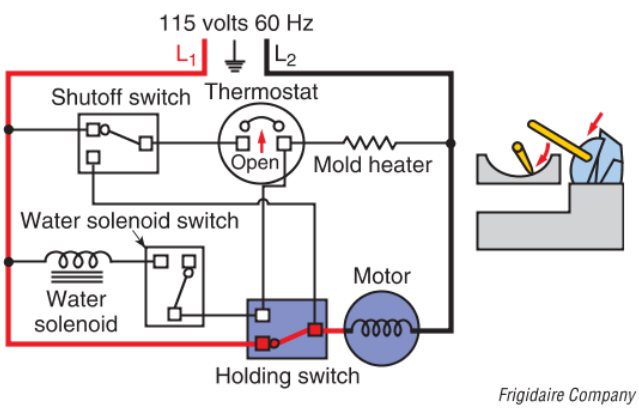

Frigidaire Company

Figure 24-40. During the second revolution, the heat from the mold heater resets the thermostat. This action de-energizes the mold heater. If the ice bin is full, the signal arm remains in a raised position.

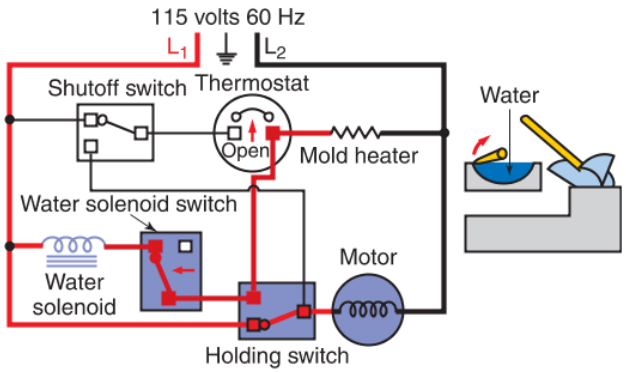

Frigidaire Company

Figure 24-41. Near the completion of the second revolution, the timing cam closes the water solenoid switch, initiating the fill phase. The water valve solenoid is energized, opening the water valve. Water refills the ice cube mold.

When the first revolution is completed, the timing cam moves the holding switch, **Figure 24-38**. However, the thermostat is still closed, so the motor continues to turn and a second revolution of the timing cam begins. At this point, the ice has been lifted from its mold.

In **Figure 24-39**, after a few degrees of rotation, the timing cam moves the holding switch. The holding switch provides the circuit to the motor, permitting completion of the revolution. The mold heater remains on. The signal arm again raises and lowers, operating the shutoff switch. The ice that was harvested during the first revolution is dumped into the container.

During the second revolution, **Figure 24-40**, the heat produced by the mold heater resets the thermostat to open. With the thermostat contacts open, the mold heater is de-energized. If the container is full, the signal arm will remain raised.

Figure 24-41 shows the near completion of the second revolution. The timing cam closes the water solenoid switch. The circuit is completed through the water solenoid, the water solenoid switch, and the mold heater. When the water solenoid is energized, the water valve opens and water fills the mold.

Figure 24-42 shows the end of a harvest phase. The container is full and no other cycles will start until enough ice has been removed from the bin to allow the signal arm to drop, closing the shutoff switch. If enough ice is removed from the bin, a new cycle will start as soon as the ice gets cold enough to close the thermostat contacts.

Water and Ice Dispensers

One of the more requested refrigerator-freezer options is filtered and chilled water and ice dispensing. A solenoid-operated valve controls the flow of water. This water goes to the dispenser and also to the

Copyright Goodheart-Willcox Co., Inc.

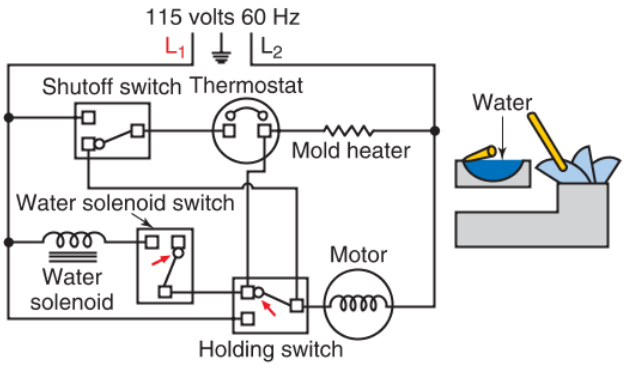

Frigidaire Company

Figure 24-42. The fill phase is ended by the timing cam operating the holding switch and water solenoid switch. The container is full of ice cubes. No further ice making cycles will begin until ice cubes are removed from the bin, allowing the signal arm to drop.

ice maker The solenoid valve is usually energized by a dispenser switch or relayed through a control board that monitors the dispenser switch via low-voltage, **Figure 24-43**.

Domestic water for dispensing is chilled in a reservoir inside the refrigerator. Sometimes this reservoir is a tank, and sometimes it is simply a long length of tubing coiled up and mounted in the back of the compartment. The cold air inside the refrigerator cools the water. Before household water is stored in a reservoir in the fresh food section, it passes through a filter cartridge, **Figure 24-44**.

Maytag

Figure 24-43. Ice and water systems are popular options on domestic refrigerator-freezers. The model shown here is capable of dispensing water and cubed or crushed ice.

Pro Tip

The Effect of Water Pressure on Water Valves

Most water valves used in refrigerators operate against the incoming water pressure. The valves often rely on the water pressure to assist in proper closing. In low water-pressure conditions, the valve may not fully close, and dripping or leaking can occur.

Caution

Reverse Osmosis Systems

In households with reverse osmosis systems, the refrigerator should not be connected to the outlet of the reverse osmosis filter. If a fill is requested while the filter is back flushing, the temporary low pressure can result in a valve that does not fully close.

Through-the-door ice dispenser systems can deliver cubed ice outside the cabinet. Some models are capable of delivering both cubed and crushed ice. In ice dispenser systems, an auger drives the cubes out of the bin for delivery through a chute in the door, **Figure 24-45**.

Most ice dispenser designs use one of two methods to deliver crushed ice. In the first method, the auger normally forces ice cubes through crusher blades before the ice drops through the door chute of the dispenser. If cubed ice is requested, a solenoid opens a bypass door that allows the cubes to exit around the crusher

Maytag

Figure 24-44. The water filter in this system is installed in the refrigeration compartment.

Copyright Goodheart-Willcox Co., Inc.

blades. The second method is to use a reversing auger motor. When the auger is driven in one direction, ice cubes are forced through the crusher blades. When the auger motor is reversed, the cubes are routed around the crusher blades.

The chute for ice delivery must be sealed when ice is not being delivered. There is usually an ice chute door that opens when ice is dispensing. The door must remain open for a few seconds after the dispense request ends to allow the last of the ice to finish dropping. The ice chute door can be held open by a solenoid with a timed release or its closure can be slowed down with an air damper. If cubes do not clear the chute, the door may not fully close. Without a seal on the chute door, external air will enter the freezer compartment. This will add significant amounts of moisture to the interior of the freezer. This additional moisture can cause frost to build up inside the compartment and either clog the evaporator or further clog the chute.

Through-the-door ice and water dispensers are most common in side-by-side refrigerator-freezers. Bottom-freezer units may also include through-the-door ice and water dispensers. In these units, the ice maker section is sealed off from the rest of the refrigerator to create a section cold enough to produce ice. A small duct connects the ice maker section and the evaporator. A blower in the ice maker unit draws cold air up through the duct.

Maytag

Figure 24-45. Features of a typical ice dispensing system. A—When the refrigerator door is closed, the ice chute is positioned directly under the ice bin. B—Ice bin and auger.

Copyright Goodheart-Willcox Co., Inc.

Chapter Review

Summary

- The primary components in a domestic refrigerator or freezer are a compressor, a condenser, a metering device, and one or more evaporators. The compressors are generally small hermetic single-phase units.
- Condensers may be natural-convection, hot-wall, or forced-draft types. Natural-convection condensers rely on naturally occurring airflow to transfer heat. Hot-wall condensers transfer heat through conduction. Forced-draft condensers are equipped with small fans that blow air across the condenser coil.
- Most domestic refrigerator-freezers use capillary tube metering devices. The evaporators used in domestic refrigerators can be either natural convection or forced convection types. Forced-convection is more common.
- The capillary tube and the suction line are often bonded together to form a heat exchanger. The heat exchanger vaporizes any residual liquid in the suction line and subcools the refrigerant entering the evaporator, which allows the system to attain a lower temperature and better efficiency.
- Domestic refrigerator-freezers may be equipped with electromechanical or electronic thermostats. Displays and controls vary by manufacturer.
- Dampers are used to control airflow between the various compartments of a domestic refrigerator-freezer. In a refrigerator-freezer equipped with dampers, the conditioned air from a single evaporator can be used to maintain different conditions in different compartments.
- The defrosting cycles of automatic defrosting systems can be triggered by a defrost timer or by the number of times the cabinet door is opened and closed. In adaptive defrost systems, the period between cycles is adjusted based on the time required to defrost the system during the previous cycle.
- Refrigerator-freezers may have systems to prevent condensation from forming on the exterior of the cabinet. This condensation usually forms around the doors. One common method of preventing condensation is to position a loop of the liquid line around door openings. This type of condensation control is referred to as a post-condenser loop, or Yoder loop. Another method uses electric heaters called mullion heaters.
- Domestic refrigerator-freezers may have special compartments that maintain different conditions than the rest of the cabinet. These include specialized drawers for meat storage and vegetable storage. Some of these drawers are equipped with their own sets of controls for adjusting the conditions inside the drawer.
- Many modern refrigerator-freezers are equipped with ice makers and ice and water dispensers. All of these systems require a connection to the domestic water supply. Most ice makers are fully automated, self-contained units. There are three phases in the ice-making cycle: fill, freeze, and harvest. Water dispensers deliver filtered water through the refrigerator door on demand. Ice dispensers use an auger to carry ice from the ice bin to a dispenser in the door.

Review Questions

Answer the following questions using the information in this chapter.

1. A _____ condenser relies entirely on conduction to remove heat from refrigerant inside the condenser tubes.
   A. natural draft
   B. forced draft
   C. hot-wall
   D. All of the above.
2. The type of metering device most commonly used in domestic refrigerators or freezers is the _____.
   A. electronic expansion valve
   B. automatic expansion valve
   C. thermostatic expansion valve
   D. capillary tube

Copyright Goodheart-Willcox Co., Inc.

3. Which of the following is a benefit provided by the heat exchanger in a domestic refrigerator?
   A. It helps to condense refrigerant vapor in the suction line.
   B. It subcools refrigerant entering the evaporator.
   C. It helps to vaporize refrigerant in the capillary tube.
   D. All of the above.
4. Which of the following statements regarding electromechanical thermostats is true?
   A. They are attached to a sensing bulb by a capillary tube.
   B. They may need to be adjusted to compensate for altitude.
   C. They rely on gas pressure to open and close electrical contacts.
   D. All of the above.
5. In refrigerator-freezers where the evaporator is located in the freezer compartment, the temperature inside the fresh food compartment is made warmer by _____.
   A. closing a damper
   B. using hot-gas defrost
   C. turning on cabinet heaters
   D. None of the above.
6. Which of the following types of defrost systems bases the frequency of the defrost cycle on the number of times the cabinet door is opened?
   A. Adaptive defrost system.
   B. Demand defrost system.
   C. Cumulative run-time defrost system.
   D. Off-cycle defrost system.
7. A post-condenser loop is also known as a _____.
   A. heat exchanger loop
   B. receiver loop
   C. Yoder loop
   D. None of the above.
8. Advanced refrigerators can use which of the following to adjust conditions inside a refrigerator storage drawer?
   A. Dampers that adjusts airflow through the drawer.
   B. Low-wattage heaters.
   C. Circulation fans.
   D. All of the above.
9. Which of the following statements regarding automatic ice makers is *not* true?
   A. The three phases of the ice-making cycle are fill, freeze, and harvest.
   B. The ice maker transitions from the freeze phase to the harvest phase based solely on elapsed time.
   C. The signal arm changes position as the timing cam rotates.
   D. None of the above.
10. By which method is ice delivered to the chute in a through-the-door ice dispenser system?
   A. An auger turns and moves ice into position over the chute.
   B. An ejector arm dislodges ice from a mold directly into the chute.
   C. An energized solenoid opens a trap door beneath a column of ice that drop down into the chute.
   D. A heater warms up so ice can drops from an inverted mold down into the chute.

Copyright Goodheart-Willcox Co., Inc.

CHAPTER 25 Installation and Troubleshooting of Domestic Refrigerators and Freezers

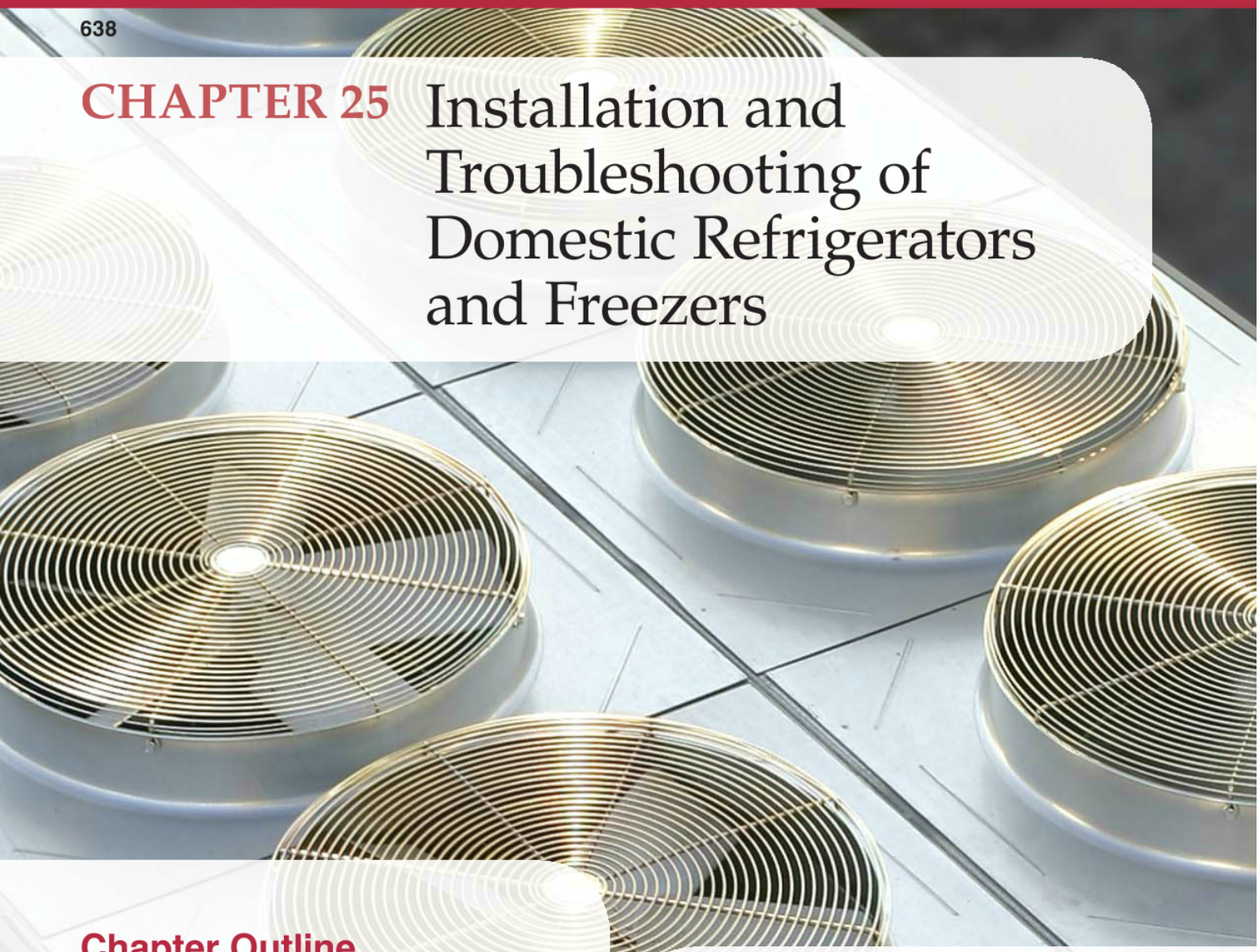

Chapter Outline

25.1 Checking for Proper Installation
- 25.1.1 Installing an Ice Maker
- 25.1.2 Checking Electrical Supply
- 25.1.3 Checking for Proper Ventilation
- 25.1.4 Starting a Refrigerator

25.2 Diagnosing Symptoms
- 25.2.1 Diagnosing a No-Start Condition
- 25.2.2 Diagnosing Poor Performance
- 25.2.3 Ice on the Evaporator
- 25.2.4 Moisture and Ice in the Cabinet Insulation
- 25.2.5 Ice Maker Problems
- 25.2.6 Unusual Noises
- 25.2.7 Unusual Cycling Times
- 25.2.8 System Failure

25.3 Checking External Circuits

25.4 Diagnosing Internal Troubles
- 25.4.1 Analyzing Temperature-Pressure Conditions
- 25.4.2 Identifying Common Problems
- 25.4.3 Diagnosing Specific Component Problems

Learning Objectives

Information in this chapter will enable you to:

- Check domestic compression refrigerators for proper installation.
- Use the proper procedure for starting a domestic refrigerator-freezer.
- Interpret common symptoms of system malfunction.
- Use proper procedures to test a domestic refrigerator-freezer's auxiliary circuits.
- Explain the use of piercing valves, pinching tools, and valve adapters.
- Interpret temperature and pressure conditions inside a refrigeration system to determine points of failure.
- Summarize common symptoms of internal component failure and their possible causes.

Technical Terms

inspection mirror
listing
pinch-off tool
process tube
troubleshooting chart
ultrasonic
valve adapters

Review of Key Concepts

Reviewing these concepts from earlier chapters will help you understand new concepts presented in this chapter:

- Decreasing the pressure on a gas causes the gas to expand and causes its temperature to drop. This phenomenon, along with a physical change of state from liquid to gas, provides the cooling action in a refrigeration system. (Chapter 5)
- A filter-drier removes moisture from circulating refrigerant. This moisture might otherwise freeze in the metering device or other orifice. Moisture is also harmful when mixed with oil inside a system because it can form sludge and acid. (Chapter 6)
- Brazing is one of the best methods of making leakproof connections in refrigeration lines. A good braze joint requires proper preparation and technique. (Chapter 8)
- Troubleshooting is the analysis of a problem. This analysis is generally guided by a chart provided by the manufacturer of the equipment. (Chapter 3)
- HVACR technicians must be certified by the EPA to handle refrigerants in cylinders and charge them into refrigeration systems. Specialized equipment is used to handle refrigerants, perform refrigeration system service, and pull a vacuum. (Chapter 10)
- The majority of electrical problems can be narrowed down to the following common problems: a short circuit, a ground fault (short to ground), an overload, an unintentional voltage drop, or an open circuit. (Chapter 13)
- Motor controls turn a compressor motor off when the conditioned space reaches the desired temperature or a corresponding low-side pressure has been reached. Motor controls turn on a compressor when the conditioned area has warmed to a certain temperature or low-side pressure has risen to a certain level. (Chapter 16)

Introduction

In order to effectively troubleshoot a domestic refrigerator-freezer, a technician must first have a good understanding of how the system works. Good troubleshooting begins by eliminating the simplest and most common possible problems first. After the simplest possible causes have been eliminated, other potential causes of problems should be methodically checked and eliminated.

Video

- Accessing Sealed Systems

25.1 Checking for Proper Installation

Correct installation is critical to the proper operation of a refrigerator or freezer. This includes leveling of the cabinet, providing correct electrical power, and ensuring good ventilation. The manufacturer ships the units carefully crated. The unit is also shipped with full written instructions. These instructions include information on how to move, uncrate, and install the unit.

A refrigerator or freezer carton usually has proper handling instructions attached to or printed on the carton itself. These instructions should be carefully followed. Many dealers uncrate the cabinet at the store. Others do it just outside the home. (Most crates are too large to fit through household doors.)

Certain areas of the cabinet can be easily damaged during moving or uncrating:

- Bottom. The condensing unit may be damaged.
- Back. The condensing unit may be damaged.
- Door. The door may be forced out of line or buckled.

Shipping bolts are often used to secure compressors during shipping. If the compressor is mounted on or suspended from springs, the shipping bolts are usually removed after the unit is installed. If the compressor is mounted on synthetic flexible grommets, the shipping bolts are usually loosened two or three turns after the appliance is installed. It is important to inspect a unit for shipping bolts. If present, the shipping bolts should be loosened or removed in accordance with the manufacturer's instructions. This will permit the compressor to correctly vibrate on its mounts.

Refrigerators and freezers should be moved using a dolly with a ratcheting holding strap. The hold-down strap wraps around the appliance and secures it to the dolly. The side rails of the dolly can be used as skids to aid in moving the appliance in and out of the delivery truck and in and out of the building.

If at all possible, the refrigerator-freezer should be positioned so it is out of direct sunlight and away from potential heat sources, such as ovens, radiators, and warm air registers. If the unit must be located near an oven or radiator, a heat shield should be installed on the side of the refrigerator-freezer that is next to the heat source. The room should be large enough to provide sufficient air to cool the condenser. A room size of 100 ft^2 or greater is preferred.

A spirit level (bubble level) should be used to carefully level the refrigerator during installation. To do this, the floor where the rear supports or legs of the refrigerator are to rest should be checked. If it is not level, wood shims can be added under the rear supports to level the cabinet. Usually, the front supports are adjustable. They should be adjusted to properly level the cabinet. To do this, one installer pushes on the top of the cabinet, just enough to take the weight off the front levelers. A second technician then adjusts the levelers so the unit is level across its width and front to back. **Figure 25-1** shows how one type of leveler is adjusted.

25.1.1 Installing an Ice Maker

As explained in the previous chapter, many domestic refrigerator-freezers have automatic ice makers. These units are connected to a cold water line by a length of 1/4" copper or plastic tubing. Refer to **Figure 25-2**.

Before putting the refrigerator into place, run the copper tubing to the nearest cold water line. Cabinet partitions or the floor may have to be drilled in order to properly route the tubing. Determine which method to use to access the domestic water line: saddle valve or T-fitting with a shut-off valve. A saddle valve requires less work than installing a T-fitting, but it is also considered more prone to leaking.

Code Alert

Accessing Domestic Water

When dealing with water, be aware of local building and plumbing codes. Some jurisdictions require that access to a water line include a T-fitting and a permanent shut-off valve instead of a saddle valve. Codes may also place restrictions on the use of compression fittings. Check with local building authorities before beginning work on such a project. Note that this often applies to water accessed for a refrigerator-freezer's ice maker and water dispenser and also for central humidifiers.

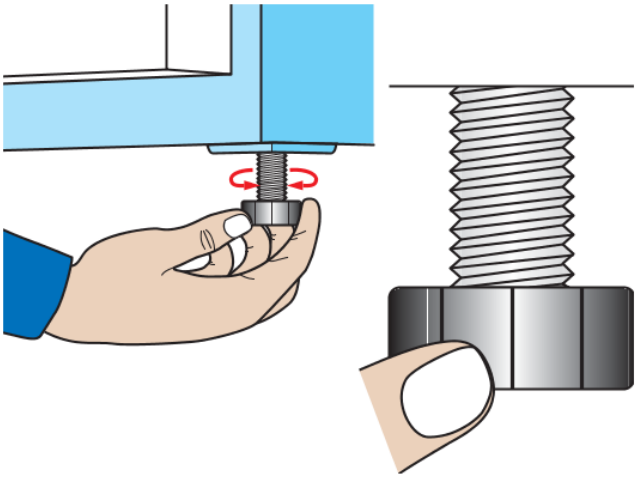

Goodheart-Willcox Publisher

Figure 25-1. Most levelers are threaded legs. They are adjusted by turning them so they thread further into or out of the cabinet, effectively changing the length of the leg.

Copyright Goodheart-Willcox Co., Inc.

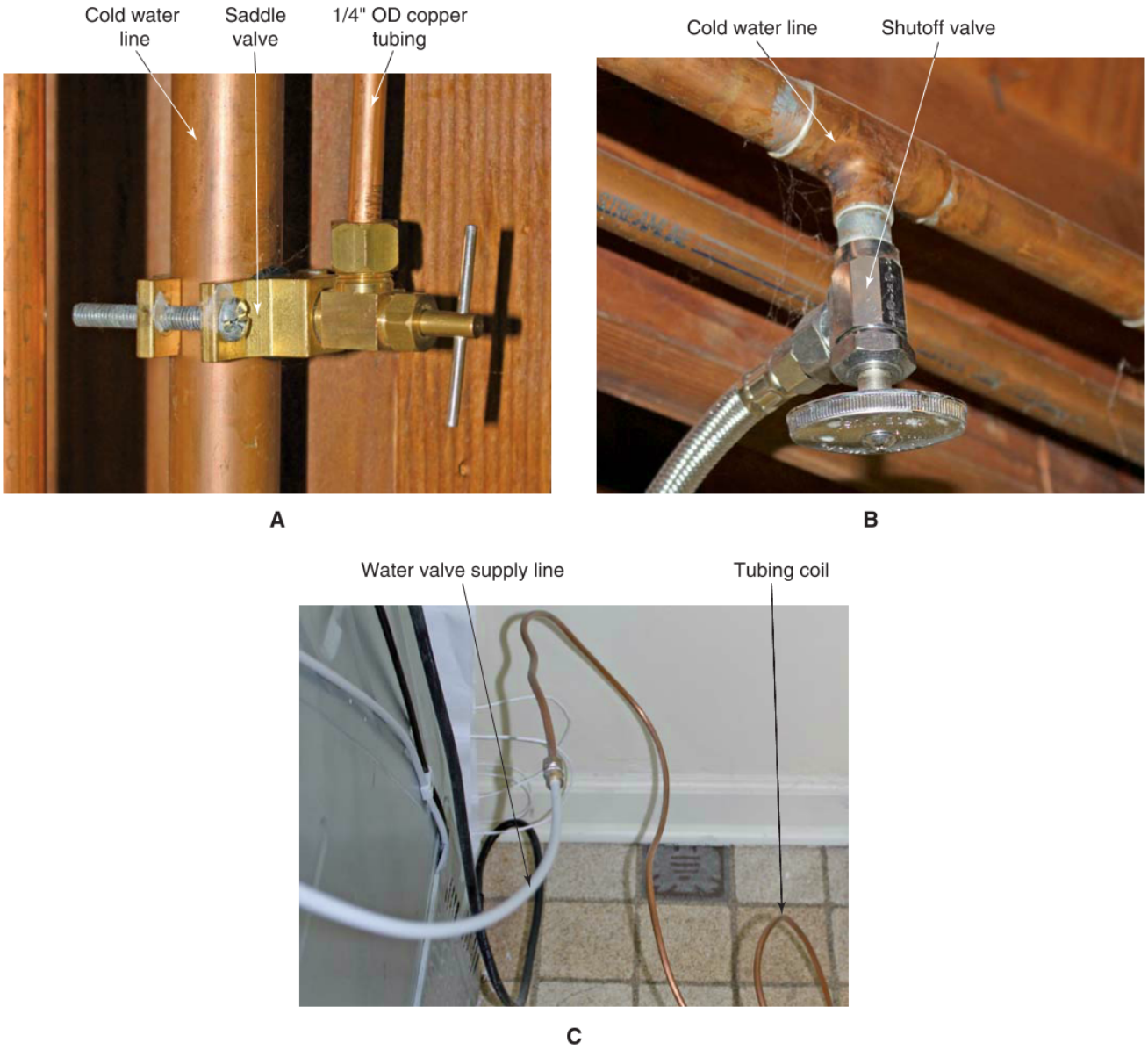

Goodheart-Willcox Publisher

Figure 25-2. A typical water line installation for an automatic ice maker. A—A saddle valve installed on a cold water line. B—A permanent shutoff valve can be used instead of a saddle valve. C—Copper tubing connects the cold water line to the water valve supply line. In other installations, the copper tubing connects directly to a water valve fitting on the back of the refrigerator.

Connect the tubing to the valve (usually with a compression fitting). Check how much tubing is required to connect from the valve to the refrigerator. The tubing run from the water to the refrigerator should include several large loops of tubing that can be placed behind the refrigerator. This extra length of tubing will allow the refrigerator to be moved for cleaning and servicing without requiring the water connection to be cut off or disconnected. Once enough tubing length has been determined, connect the other end of the tubing to the refrigerator water line fitting.

Turn the water valve stem to turn on the water to the refrigerator-freezer. Check for water leaks. Test the water dispenser if applicable. Check the ice maker to see whether water has filled the ice cube tray and begun its cycle. If everything appears to be working and no leaks are found at any of the connections, gently move the refrigerator to its desired location. Be careful to avoid kinking, buckling, or pinching the tubing at any point.

Copyright Goodheart-Willcox Co., Inc.

25.1.2 Checking Electrical Supply

The electrical outlet for a refrigerator-freezer must provide the correct electrical supply. Be sure to read the electrical ratings on the appliance. Check these against the electrical supply provided at the wall outlet. Modern household refrigerators and freezers may need more current than older, simpler refrigerators and freezers.

There should be a separate circuit from the service panel to the refrigerator-freezer outlet. Plug in a lightbulb or other small electrical load and turn off the circuit breaker to determine which breaker controls that circuit. Check the ampere rating of the circuit breaker and compare this to the ampere rating of the refrigerator-freezer to ensure they are compatible.

Avoid using an extension cord between the refrigerator power cord and the wall outlet. If an extension cord is too long, it could cause a voltage drop. The resulting voltage at the refrigerator-freezer may be too low. Voltage at the refrigerator outlet can be easily checked with a voltmeter or multimeter, **Figure 25-3**.

The circuit capacity (wire size, etc.) is checked in the following way. If, at the instant of starting, the voltage at the refrigerator outlet drops more than 10 V, the wiring in the circuit is not heavy enough. A flicker in the lights at the instant the refrigerator starts is a sure sign of a poor electrical supply.

It is very important to ground the refrigerator. All removable electrical parts, like fans, thermostats, and timers, are already safety grounded. If the wall outlet has a three-prong socket and the unit has a matching power cord plug, there is grounding. Otherwise, a wire must be attached between a metal part of the refrigerator-freezer cabinet and a good ground, such as a water pipe. The type of plug used on the appliance's power cord indicates the voltage and grounding. Most plugs will be three-prong with a ground. Refer to Chapter 13, *Electrical Power*, for more information about electrical power, circuit design, grounding, and plug and receptacle configurations.

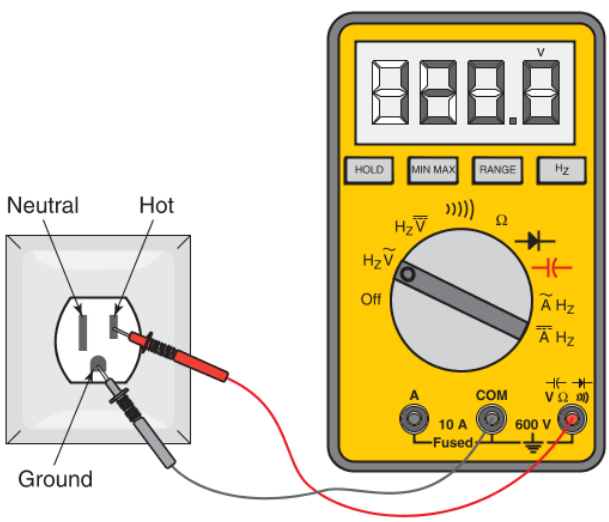

Goodheart-Willcox Publisher

Figure 25-3. When checking a wall receptacle ground terminal, the multimeter measures ac voltage between the hot (live) wire and ground.

Safety Note

Check for Ground

Always check for proper grounding in the outlet box that supplies current to the refrigerator-freezer. A common method is to take a voltmeter reading from the "live" wall receptacle connection to the receptacle ground connection. A full voltage reading indicates that the outlet is properly grounded, as shown in **Figure 25-3**.

25.1.3 Checking for Proper Ventilation

Since domestic refrigerators are air-cooled, proper ventilation is very important. Yet, many kitchens are designed without adequate space for air movement around the appliance. In these rooms, only refrigerator-freezers with forced-draft condensers should be used. The fans draw cool air in at the floor level and circulate it over the condenser. The warm air is then exhausted back into the kitchen at, or near, floor level. Nothing should be placed in front of such openings to block airflow.

Many domestic refrigerators have a natural-convection condenser that is mounted on the back. Some are protected by a shroud. The shroud helps promote a chimney effect, increasing the rate of natural airflow over the condenser. With this type of condenser, air spaces must be provided at the bottom, back, and top of the unit to ensure good air circulation. Having shelves or cabinets over a refrigerator-freezer with a natural-convection condenser is not recommended.

Many freezers and some refrigerators have hot-wall condensers. For these units, at least 2″ (51 mm) of space must be allowed between the refrigerator or freezer cabinet and surrounding surfaces. Some room for air circulation is necessary to allow heat transferred to the cabinet to dissipate.

25.1.4 Starting a Refrigerator

After testing the wall outlet with a voltmeter to be certain the correct electrical power is being supplied, put the temperature control in the off position. Connect the electrical cord to a wall outlet. Then, adjust the temperature control to the middle of its range and make

Copyright Goodheart-Willcox Co., Inc.

sure the refrigerator runs before moving it into its final position.

After a few hours of operation, check the thermometer in the fresh food (refrigerator) compartment. Adjust the temperature control setting to the customer's requirements.

25.2 Diagnosing Symptoms

Refrigerators, like all machines, eventually wear out or suffer malfunctions. Just as a doctor analyzes a patient's symptoms to determine what is wrong, an HVACR technician observes the symptoms of the refrigeration system's malfunction and performs a test to determine what is wrong with the system. It is extremely important to work methodically when troubleshooting a system.

25.2.1 Diagnosing a No-Start Condition

If a refrigerator does not start, make sure that the electrical supply circuit is in good condition and that the proper voltage is being delivered to the unit. Open and close the doors to make sure that the interior lights are functioning properly. If the interior lights fail to turn on and off as the door opens and closes, look for problems in the electrical supply circuit. Check any circuit breaker or fuse in the circuit.

If the lights turn on and off as expected, the refrigerator is being supplied with power, and the problem is likely in the motor control circuits or the compressor's motor itself. The troubleshooting process should begin with a visual inspection to check for obvious problems. After the visual inspection, the external electrical circuits should be checked for problems. Look for any loose connections, broken wires, or other problems with the electrical components. Finally, the system should be checked for mechanical trouble that prevents its startup. The troubleshooting process described in the sections that follow can be applied to a refrigerator that will not start or one that is performing poorly.

Pro Tip

Restarting a Capillary Tube System

If a refrigerator-freezer equipped with capillary tube metering device is stopped and then started immediately, it may fail to operate. This is not necessarily a malfunction. The motor in this type of refrigerator has insufficient starting torque to overcome high head pressure. Disconnect the refrigerator for a few minutes to allow the high-side and low-side pressures to balance. Then, try starting the system.

25.2.2 Diagnosing Poor Performance

The first step in diagnosing a faulty system is to visually inspect the system, looking for any obvious problems. A very helpful device for inspecting a refrigerator is an ***inspection mirror***, which is a small adjustable mirror mounted on a long extension. Most inspection mirrors have a telescoping handle. The mirror pivots and can be used to check such things as fan alignment, motor condition, cleanliness of the condenser, the condition of the evaporator, and any other hard-to-reach places, **Figure 25-4**.

Caution

Inspection Mirrors

When inserting an inspection mirror into a recessed or obstructed area, be aware that the area may contain moving parts that are hidden from view. Always avoid touching moving parts with an inspection mirror.

If a problem is detected during the visual inspection, determine whether that problem could result in the symptoms you are investigating. Also, determine whether the problem you detected during the inspection could actually be a symptom of an even larger problem.

Ritchie Engineering Co., Inc. – YELLOW JACKET Products Division

Figure 25-4. An inspection mirror is often needed to see into hard-to-reach places.

Copyright Goodheart-Willcox Co., Inc.

After the visual inspection, the next step in diagnosing a system is to determine the possible causes of the symptoms. Troubleshooting charts are very useful for determining possible causes. A ***troubleshooting chart*** lists common troubles, symptoms, their causes, and remedies, **Figure 25-5**.

Next, repair or correct the problem. If the problem could have been a possible cause of the initial symptoms, retest the system to determine whether the service corrected the problem. If the service you performed did not correct the symptoms, continue diagnosing the system.

Troubleshooting Chart—Domestic Refrigerator-Freezers

Trouble	Common Cause	Remedy
Unit will not run.	1. Blown fuse.	1. Replace the fuse.
	2. Low voltage.	2a. Check the outlet with a voltmeter. It should measure 115 V plus or minus 10%.
		2b. If the circuit is overloaded, either reduce the load, or have an electrician install a separate circuit.
		2c. If you are unable to remedy the problem any other way, install an auto-transformer.
	3. Broken motor or temperature control.	3. Install a jumper across the terminals of the control. If the unit runs and all connections are tight, replace the control.
	4. Broken relay.	4. Check the relay and replace as needed.
	5. Broken overload protector.	5. Check the overload protector and replace as needed.
	6. Broken compressor.	6. Check the compressor and replace as needed.
	7. Defective power cord.	7. Check the cord using a test light at the unit. Replace the cord if there is current at the outlet but not at the unit.
	8. Broken lead to the compressor, timer, or thermostat.	8. Repair or replace the broken leads.
	9. Broken timer.	9. Check the timer with a test light and replace as needed.
Refrigerator section too warm.	1. Repeated door openings.	1. Instruct user.
	2. Overloading of shelves, blocking the normal airflow in the cabinet.	2. Instruct user.
	3. Warm or hot foods placed in cabinet.	3. Instruct user to allow foods to cool to room temperature before placing in the cabinet.
	4. Poor door seal.	4. Level the cabinet and adjust the door seal. Replace the gasket if necessary.
	5. Interior light stays on.	5. Check the light switch and replace as needed.
	6. Refrigerator section airflow controls improperly set or malfunctioning.	6a. Turn the control knob to a colder position. Check the airflow heater.
		6b. Check the damper for proper operation by removing the grille. With the cabinet door open, the damper should open. If the control is inoperative, replace the control.
	7. Cold control knob set at too warm a position, not allowing the unit to operate often enough.	7. Turn the control knob to a colder position.
	8. Freezer section grille not properly positioned.	8. Reposition the grille.
	9. Freezer fan not running properly.	9. Replace the fan, fan switch, or defective wiring.
	10. Defective compressor intake valve.	10. Replace the compressor.
	11. Air duct seal not properly sealed or positioned.	11. Check and reseal or put the seal in the correct position.

Goodheart-Willcox Publisher

Figure 25-5. Common domestic refrigerator-freezer troubles, their causes, and suggested remedies. This particular chart should be considered a general guide only. It does not apply to all units. (*continued*).

Copyright Goodheart-Willcox Co., Inc.

A methodical approach is needed to find the cause of poor operation. Always remember, cooling occurs only when the evaporator pressure is low enough and liquid refrigerant is present in the evaporator. For example, if an evaporator has the correct low pressure but is warm, it indicates there is no liquid in the evaporator.

In another example, a drier in the liquid line is frosting over. There is liquid refrigerant, but the drier is absorbing heat for some reason. An evaporator absorbs heat because the refrigerant is suddenly under much lower pressure than it was in the liquid line. Therefore, something must be causing low pressure

Refrigerator section too cold.	1. Refrigerator section airflow control knob turned to coldest position. 2. Airflow control remains open. 3. Broken airflow control. 4. Broken airflow heater.	1. Turn the control to a warmer position. 2. Remove any obstruction. 3. Replace the control. 4. Replace the heater.
Freezer section and refrigerator section too warm.	1. Fan motor not running. 2. Cold control set too warm or broken. 3. Finned evaporator blocked with ice. 4. Shortage of refrigerant. 5. Not enough air circulation around the cabinet. 6. Dirty condenser or obstructed condenser ducts. 7. Poor door seal. 8. Repeated door openings.	1. Check the fan motor and replace as needed. 2. Check the control and replace as needed. 3. Check the defrost thermostat or timer. A failure in either of these could cause icing. Replace as needed. 4. Check for and repair leaks. Evacuate and recharge the system. Recover/recycle the refrigerant. 5. Relocate the cabinet or provide adequate clearance to allow sufficient circulation. 6. Clean the condenser and the ducts. 7. Level the cabinet and adjust the door seal. Inspect and replace the gasket if necessary. 8. Instruct user.
Freezer section too cold	1. Cold control knob improperly set. 2. Cold control sensing bulb not properly clamped to the evaporator. 3. Broken cold control.	1. Turn the knob to a warmer position. 2. Tighten the clamp or reposition the bulb. 3. Check the control and replace if needed.
Unit runs all the time.	1. Inadequate air circulation over the condensing coil. 2. Poor door seal. 3. Freezing large quantities of ice cubes or heavy loading after shopping. 4. Refrigerant undercharge or overcharge. 5. Room temperature too warm. 6. Faulty cold control. 7. Defective light switch. 8. Repeated door openings.	1. Relocate the cabinet to provide adequate clearance. Remove any obstructions to proper airflow over the condenser coil. 2. Check and make necessary adjustments. Inspect and replace the gasket if necessary. 3. Explain to the customer that heavy loading causes long running times. 4. Check, evacuate, and recharge the system with the proper charge. 5. Ventilate the room as much as possible. 6. Check the control and replace if needed. 7. Check the light switch and replace as needed. 8. Instruct user.
Noisy operation.	1. Loose flooring or the floor is not firm. 2. Tubing contacting the cabinet or other tubing. 3. Cabinet not level. 4. Drip tray vibrating. 5. Fan is hitting the liner or mechanically grounding. 6. Compressor is mechanically grounded.	1. Tighten the flooring or brace the floor. 2. Reposition tubing as needed. 3. Level the cabinet. 4. Move the tray or place it on a foam pad. 5. Move the fan. 6. Replace the compressor mounts.

Goodheart-Willcox Publisher

Figure 25-5. *Continued.*

Copyright Goodheart-Willcox Co., Inc.

Troubleshooting Chart—Domestic Refrigerator-Freezers		
Trouble	**Common Cause**	**Remedy**
Unit cycles on overload.	1. Broken relay. 2. Weak overload protector. 3. Low voltage. 4. Faulty compressor.	1. Replace the relay. 2. Replace the overload protector. 3. Check the outlet with a voltmeter. The voltage under load should be 115 V plus or minus 10%. If voltage is low, check for multiple appliances being used on the same circuit or the use of an extremely long or undersized extension cord being used. 4. Check for proper operation with test power cord that is known to be good. Check for proper grounding. If the power to the unit is adequate and the unit is properly grounded, replace the compressor.
Stuck compressor.	1. Broken valve. 2. Insufficient oil. 3. Overheated compressor.	1. Replace the compressor. 2. Add oil. If the unit still will not operate, replace the compressor. 3. If the compressor is faulty for any reason, replace the compressor.
Frost or ice on a finned evaporator.	1. Broken defrost timer. 2. Defective defrost heater. 3. Defective thermostat.	1. Check the timer with a test light and replace if necessary. 2. Replace the heater. 3. Replace the thermostat.
Ice in the drip catcher.	1. Defective drip catcher heater.	1. Replace the heater.
Freezer runs all the time—temperature normal.	1. Ice buildup on the evaporator. 2. Thermostat sensing bulb not in contact with the evaporator surface.	1. Check door gaskets and replace as needed. 2. Place the sensing bulb in contact with the evaporator surface.
Freezer runs all the time—temperature too cold.	1. Faulty thermostat.	1. Test the thermostat and replace as needed.
Freezer runs all the time—temperature too warm.	1. Ice buildup in the cabinet insulation.	1. Stop the unit and disconnect power. Melt the ice and dry the insulation. Seal any cracks or gaps in the outer shell and try again.
Rapid ice buildup on the evaporator	1. Leaky door gasket.	1. Adjust the door hinges. Replace the door gasket if it is cracked, brittle, or worn.
Door on the freezer compartment freezes shut	1. Faulty electric gasket heater. 2. Faulty gasket seal.	1. Use alternate gasket heater, or install a new one. 2. Inspect and check the gasket. If the gasket is worn, cracked, or hardened, replace it.
Freezer works, and then warms up.	1. Moisture in the refrigerant.	1. Install a drier in the liquid line.
Gradual reduction in freezing capacity.	1. Wax buildup in the capillary tube.	1. Clean or replace the capillary tube.

Goodheart-Willcox Publisher

Figure 25-5. *Continued.*

in the drier. A likely cause is a restriction to refrigerant flow. The low pressure in the drier, indicated by the frosting, suggests that it may be partially clogged. Look for such effects and think through what might cause such effects.

Figure 25-6 is a chart listing problems, possible causes, and solutions for troubleshooting ice makers. Whether troubleshooting a refrigerator-freezer or an auxiliary system, like an ice maker, the same basic troubleshooting techniques apply. Examine the symptoms

Copyright Goodheart-Willcox Co., Inc.

Troubleshooting Chart—Domestic Ice Makers		
Trouble	**Common Cause**	**Remedy**
Cube produced by ice maker is too small.	1. Ice mold not correctly mounted. 2. Insufficient water delivery. 3. Faulty water valve switch.	1. Check that mold is in a level position. 2. Check supply water pressure and strainer for restrictions. 3. Check electrical contacts and operation.
Automatic ice maker will not start cycle.	1. No power to ice maker. 2. Ice level indicator signal arm stuck in up position. 3. Ice maker motor shorted or burned out.	1. Check voltage to ice maker. 2. Check for obstruction blocking signal arm movement. 3. Check voltage to motor and motor operation.
Automatic ice maker does not fill with water.	1. Insufficient flow or no flow of water to unit. 2. Ice level indicator signal arm stuck in up position. 3. Ice maker motor shorted or burned out.	1. Check main water supply flow. Clean all strainers. 2. Check for obstruction blocking signal arm movement. 3. Check voltage to motor and motor operation.
Automatic ice maker does not complete cycle.	1. Faulty ice level indicator. 2. Cube heater or thermostat faulty.	1. Check for obstructions blocking signal arm movement. Test continuity of ice level indicator switch. 2. Check resistance of heater. Jump out thermostat.

Goodheart-Willcox Publisher

Figure 25-6. Common problems of domestic ice makers.

8

and eliminate the possible causes using a systematic, logical approach. The following sections describe some common problems found in domestic refrigerators and their possible causes.

25.2.3 Ice on the Evaporator

A large buildup of ice on an evaporator acts as insulation, preventing heat inside the cabinet from being transferred to the refrigerant in the evaporator. When this occurs, the evaporator may not be able to cool the inside of the refrigerator. Ice buildup on the evaporator is usually caused by a leaky door seal (gasket). In a frost-free or automatic defrost refrigerator, ice buildup indicates that the defrost feature is not operating properly.

Faulty Gasket

If the seal on a refrigerator door is not complete, external air will enter the conditioned space. This external air will add moisture to the system and cause abnormal frosting on the evaporator. The frosting could also be apparent on the walls of the compartment.

If a gasket forms a poor seal in just one location, a heat gun can be used to apply moderate heat to that spot on the gasket. When the bad area of the gasket is sufficiently heated, it becomes pliable and can be reformed. Sometimes a small amount of silicone grease can be applied to the gasket to assist in creating an airtight seal. The grease allows the gasket to flex more easily and prevents binding as the door closes.

Old or brittle gaskets allow heat to enter a refrigerator and cool air to leak out. Signs of gaskets in need of replacement include increased system running time and condensation or mold on the gasket. To check for a faulty gasket, a slip of paper is placed between the door and cabinet, and then the door is closed. The slip of paper should be held tightly by the closed door. If the paper can be pulled out easily, the gasket does not form a tight enough seal. In some cases, the hardware (latch and hinges) can be adjusted to obtain a better seal. In other cases, the gasket may have become inflexible or broken and must be replaced.

Replacement gaskets are specific to the refrigerator make and model. However, universal repair kits are available. The kit includes a roll of magnetic strip and four lengths of gasket material with preformed corners. The gasket material can be easily cut to the size needed, **Figure 25-7**.

While removing an old door gasket, place the replacement gasket in warm water for a few minutes to make it pliable. Gaskets are often held in place by a metal strip (retainer) attached to the door. In these cases, lift the inside edge of the old gasket and slightly

Copyright Goodheart-Willcox Co., Inc.

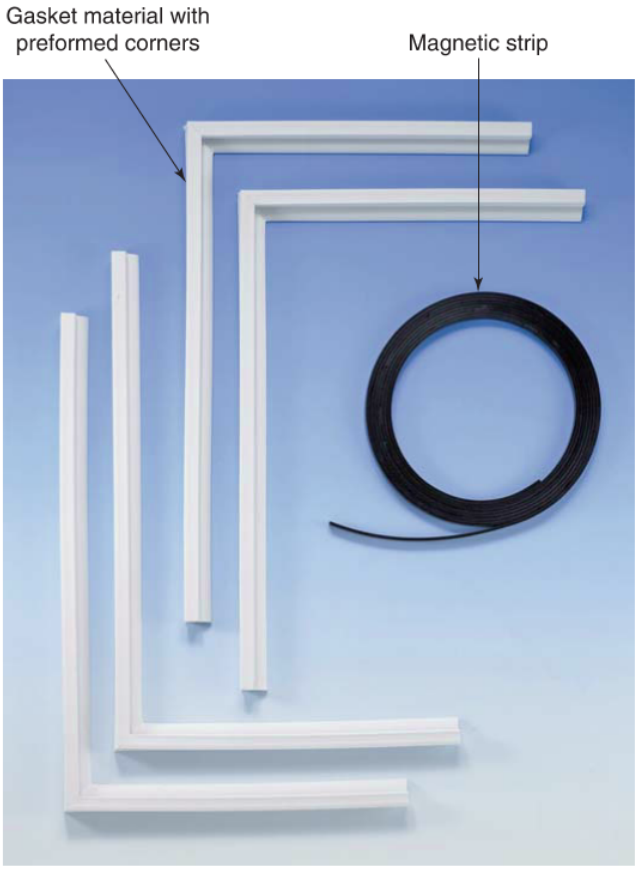

Sealed Unit Parts Co., Inc.

Figure 25-7. A universal refrigerator door gasket replacement kit. This kit includes door gasket strips and magnetic material.

loosen the screws to remove the old gasket. With the old gasket removed, start at one of the door's top corners, and slide the edge of the new gasket behind the retainer. Lightly tighten the retainer screws. Note the position of the door in relationship to the refrigerator cabinet. If the door is sagging or too high, loosen the hinges and realign the door.

Pro Tip

Door Liner Replacement

The interior liner for the door can be replaced on older style doors that used blanket insulation. Newer foamed doors do not have replaceable liners.

Mullion Heater Failure

Many refrigerators with a separate freezer compartment door have an electric heater around the door opening. This electric heater is also known as a *mullion heater*. It keeps ice and condensation from forming. If this heater is not working, ice buildup may keep the door from closing properly. Moisture can then enter and collect on the evaporator. Refer to the unit's wiring diagram to determine whether or not the unit is equipped with a door heater.

Defrost System Failure

An automatic defrost system should prevent excessive frosting of the evaporator. If an automatic defrost is not working properly, ice may build up on the evaporator, greatly reducing the evaporator's efficiency.

Manual Defrost

Chest type freezers and nonautomatic defrost upright freezers require manual defrosting. To manually defrost a refrigerator or freezer, the unit must be unplugged. The contents of the refrigerator or freezer must be stored in a cooler or in a different refrigerator or freezer until the defrosting is complete. The doors are propped open so the outside air can thaw the frost.

To accelerate the defrosting process, a large pot of very hot water can be set inside the cabinet. A hair dryer or a heat gun can be used to blow hot air on the frost buildup to speed its removal. Keep the heat gun a safe distance from the cabinet walls and move it back and forth to avoid warping or otherwise damaging the cabinet walls.

Caution

Removing Ice

Never use a sharp object to remove ice from an evaporator. Doing so may puncture the evaporator. The chance of damaging an evaporator is too great to risk forcible removal of frost in an attempt to speed up the defrosting process. While evaporator repair kits are available, the durability of a repaired evaporator is much less than that of an undamaged evaporator.

When defrosting is complete, remove any water that has accumulated. Wash the inside of the cabinet with a solution of baking soda and water and thoroughly dry it.

25.2.4 Moisture and Ice in the Cabinet Insulation

The presence of moisture and ice in the cabinet insulation means there is an air leak in the outside cabinet shell. The leak allows warm, moist air to enter this space. When the warm air strikes the cold inner liner, any moisture in the warm air condenses on the cold surfaces.

When this occurs in the refrigerator cabinet, the insulation becomes wet. The moisture causes the insulation to lose its heat-insulating qualities. When insulation becomes ineffective, it causes the following two symptoms:

Copyright Goodheart-Willcox Co., Inc.

- The condensing unit runs more often than normal.
- The outside surface of the refrigerator feels colder than normal.

In a freezer compartment, the condensed moisture will form ice in the insulation. The symptoms will be the same as in a refrigerator. If this condition continues, enough ice will soon build up to cause the sides of the cabinet to buckle. The leak in the cabinet shell must be located and completely sealed.

Most freezers provide a small opening through the inner lining. This connects the insulated area with the inside of the freezer cabinet. The temperature inside the freezer is much lower than the insulation temperature. Therefore, any moisture will tend to escape through this small opening. It will then condense on the evaporator surface.

25.2.5 Ice Maker Problems

An ice maker requires the proper functioning and timing of all its components. If an ice maker is not functioning properly, check the following:

- Make sure the ice maker has been properly installed and is properly connected to water and electric power.
- Make sure the freezer compartment is at the proper temperature. Check the temperature of the mold to determine if it is above 15°F (–9.5°C). If the freeze temperature is above 15°F, it is not cold enough to close the ice maker thermostat.
- Make sure that several ice making cycles have been completed and the ice maker is in the freezing cycle.
- Make sure the ice maker thermostat is a single-throw switch wired in series with the mold heater.
- Make sure the ejector blades make two revolutions per cycle and that ice is not stored on the blades after harvest.
- Make sure the water valve solenoid is wired in series with the mold heater.

25.2.6 Unusual Noises

Audible noises in the refrigerator may be caused by vibrations. The following are common sources of unusual noises:

- Loose baffles or ducts.
- Tubing touching something that vibrates.
- ***Listing*** (leaning to one side) of the condensing unit, caused by an uneven floor.
- Fan and motor vibration.
- Loose components or panels.
- Loose articles on the shelves.
- Shelves not seated properly on the supports.

An ultrasonic leak detector can be used to isolate many noises. ***Ultrasonic*** refers to sound at a frequency above the human hearing range. Sounds generated by leaks or other defects can be located with this tool, which helps the technician identify and diagnose problems in the system, **Figure 25-8**.

Noise originating from the compressor unit may indicate that it is laboring too hard. To determine this, test the electrical load with a clamp-on ammeter. An overloaded compressor unit can sometimes be identified by its starting behavior. Three seconds to operate the relay is an average time. A slower start indicates an overload.

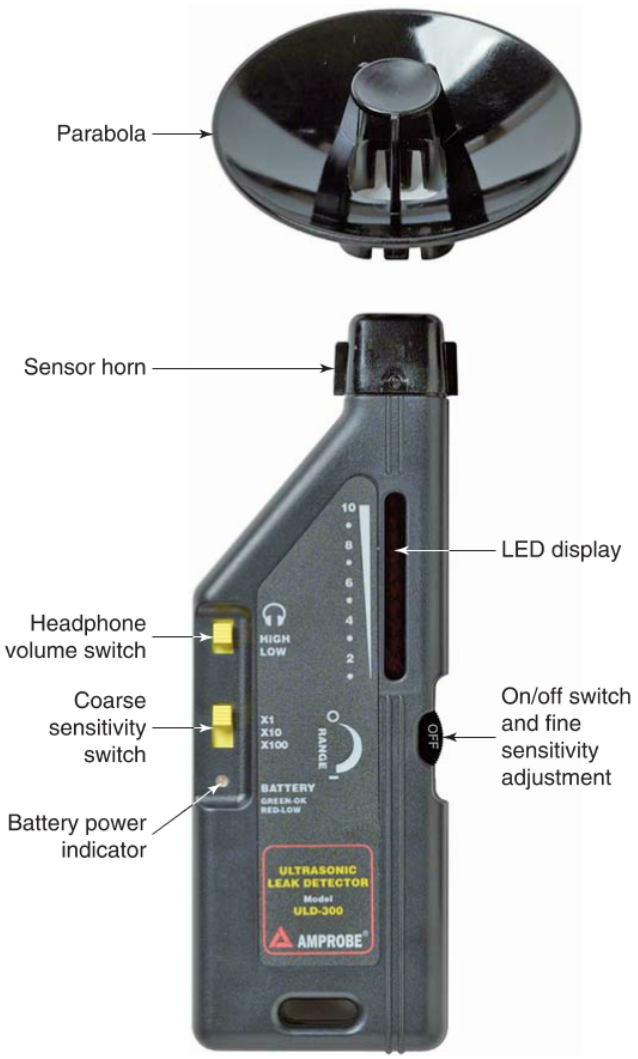

Amprobe

Figure 25-8. An ultrasonic leak detector can be used to locate the source of leaks and other noises.

Copyright Goodheart-Willcox Co., Inc.

Tubing that rattles against refrigerator parts should be carefully bent so it no longer contacts those parts. Be very careful not to kink the tubing as you bend it. The tubing may be rigid, but may have a vibration or hum (harmonic vibration). This noise can be reduced by clamping rubber blocks on the tubing, **Figure 25-9**.

Loose baffles and ducts can be secured with self-tapping sheet metal screws or sealant. Care should be taken when working on an evaporator to prevent puncturing the tubing.

25.2.7 Unusual Cycling Times

Cycling time on home refrigerators and freezers cannot be given in definite terms. Cycle times vary depending on several factors. These include the amount of storage space inside the cabinet that is being used, the temperature outside the cabinet, and the compressor condition.

Placing warm food in a cabinet to be frozen will also affect the cycling time. In many systems, the compressor runs roughly one-third of the time. In other words, it may run five minutes and be off ten minutes. It may run for ten minutes and be off for twenty minutes. This ratio of on and off time is referred to as the refrigerator's duty cycle. Any unusual or unexpected changes in cycling time should be investigated immediately. They may indicate that trouble is developing in the system.

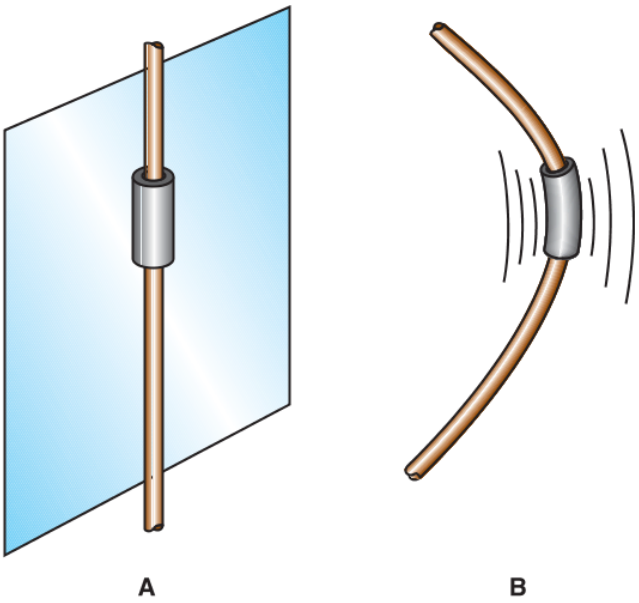

Goodheart-Willcox Publisher

Figure 25-9. Two ways to reduce noise caused by vibrating tubing. A—Wrap tape around the tubing where the tubing touches the cabinet. B—Put tape or a rubber block on the tubing in the center of a vibrating section.

25.2.8 System Failure

The failure may be that the unit is running as normal, but is not maintaining the proper temperature or the compressor motor is not running or is running erratically. The following sections provide some suggestions for troubleshooting the system based on each of those conditions:

Compressor Runs, but Cabinet Temperature Is Incorrect

- Check for cabinet leaks.
- Check for evaporator icing.
- Check for good air circulation over the condenser.
- Check for dirt or dust buildup on the condenser.
- Check the temperature control systems and components.
- Check the internal operation of the system.

Compressor Does Not Run or Runs Erratically

- Problems may be in the external circuits of the refrigerator. Eliminate external electrical components as a possible cause first.
- Check the motor.

25.3 Checking External Circuits

It is important to locate trouble and determine its cause accurately. Sometimes expensive compressors are needlessly replaced because they are believed to be faulty. The real trouble, however, may be in less expensive and easily repaired external devices. Always eliminate external components and wiring as a source of problems before diagnosing and replacing internal components.

Problems in refrigerator-freezers are frequently caused by failures in the wiring or auxiliary systems. Common sources of problems include the following:

- Power-in connections.
- Thermostat.
- Wire terminals.
- Relays.
- Capacitor (if the unit has one).
- Defrost timer.

Each of these devices should be checked carefully before the compressor or core refrigeration system components are suspected. These parts can be checked best by removing them from the wiring system. After they are isolated from the rest of the system, the parts can be checked independently. As an alternative, each part can be temporarily replaced by a test part of the proper size or capacity and known to be in good working order. Also make sure the wiring going to each

Copyright Goodheart-Willcox Co., Inc.

component is not cut, damaged, or disconnected. The refrigerator-freezer can then be checked to see if it operates properly.

Pro Tip

Inspecting Electrical Connections

Electrical connections must be clean and tight. If loose or dirty, they cause an unintentional resistance that often leads to overheating. Excessive temperatures can discolor the connection. The connection may be darkened by oxidation. A blue or greenish tint indicates overheating and corrosion. If the surrounding insulation is charred, overheating has occurred.

The thermostat should be connected into the hot (ungrounded) wire of the circuit. This wire brings power to the motor from the electrical outlet. The wire returning power to the outlet is called the common wire. The common is the grounded wire, *not* the green ground wire. To identify these wires within a refrigerator-freezer, follow the incoming wiring from the electrical plug in the wall outlet. Confirm these wires by consulting a wiring diagram for the refrigerator-freezer being serviced.

Code Alert

Switches on the Hot Wire

The National Electrical Code states that switches cannot be installed in the grounded conductor. This implies that a power switch must break electrical power before it gets to an electrical load, not after the load in the common (grounded) wire. In other words, a switch should be wired in series with the hot (ungrounded) wire going to a motor, not after it. In the case of a refrigerator, the switch is the thermostat in series with the hot wire going to the compressor motor.

Safety Note

Preventing Shock

It is important to have the thermostat in series between the hot wire and the compressor motor for safety reasons. This wiring prevents the motor from unintentionally turning on due to an internal short or fault and also to prevent the compressor from becoming electrically hot. An electrically hot compressor can cause an electrical shock to anyone who accidentally touches the compressor and completes the circuit.

A system of green grounding wires connect to the equipment grounding conductor. This grounds all electrical components in a refrigerator or freezer. This ground is not intended to be a current-carrying wire. It is for safety only. It is used to avoid an electric shock if a short circuit occurs in the electrical system.

Troubles such as open circuits and shorts to ground are easily checked with a multimeter. A test cord can be used to check four-pole motors. However, two-pole motors should be tested only by using a properly sized relay in the circuit. These motors overheat if the starting circuit is connected for more than two or three seconds.

When checking and servicing electrical circuits, first check the outlet electrical supply. Compare this with the appliance's voltage specifications.

Using a voltmeter, test the open-circuit voltage. Next, plug in the appliance and check the voltage again while it is running. The open-circuit voltage is likely to be slightly higher than with the motor running. However, this difference should not be more than 5 V. A small voltage drop between 5–10 V may be due to a clogged condenser, fan blade imbalance, or an electrical component that is drawing too many amps. If the unit has a voltage drop greater than 10 V, it is usually a sign that the compressor windings are shorted, a fan motor is locked up, or an electrical component has shorted out.

Most refrigerators and freezers have a wiring diagram attached to the back. Locate the appropriate wiring diagram and check each circuit independently. **Figure 25-10** shows the various electrical circuits typically found in a domestic refrigerator.

If a compressor fails to start, follow these steps:

1. Find out if electricity is reaching the compressor.
2. If it is, check the starting relay and circuit protectors. See Chapter 17, *Servicing Electric Motors and Controls*.
3. Disconnect all wiring from the compressor.
4. Check the compressor with a manual start test cord. **Figure 25-11** shows a test cord for a typical compressor with Start, Run, and Common terminals. It uses two NO switches for the Run and Start functions. The ground clip, labeled 4, must be fastened to the compressor dome. The fuse is located in the black wire of the manual start test cord.

Safety Note

Connector Insulation

All clips or connectors should be plastic-coated or should have a rubber boot over them to protect the technician from shocks, **Figure 25-12**.

The diagram in **Figure 25-11** shows that the start switch is controlled by the run switch. This means that the run switch has to be closed for the start switch to be able to function. Typically, the start switch is closed first, and then the run switch is closed. This allows both start and run windings to be energized simultaneously.

Copyright Goodheart-Willcox Co., Inc.

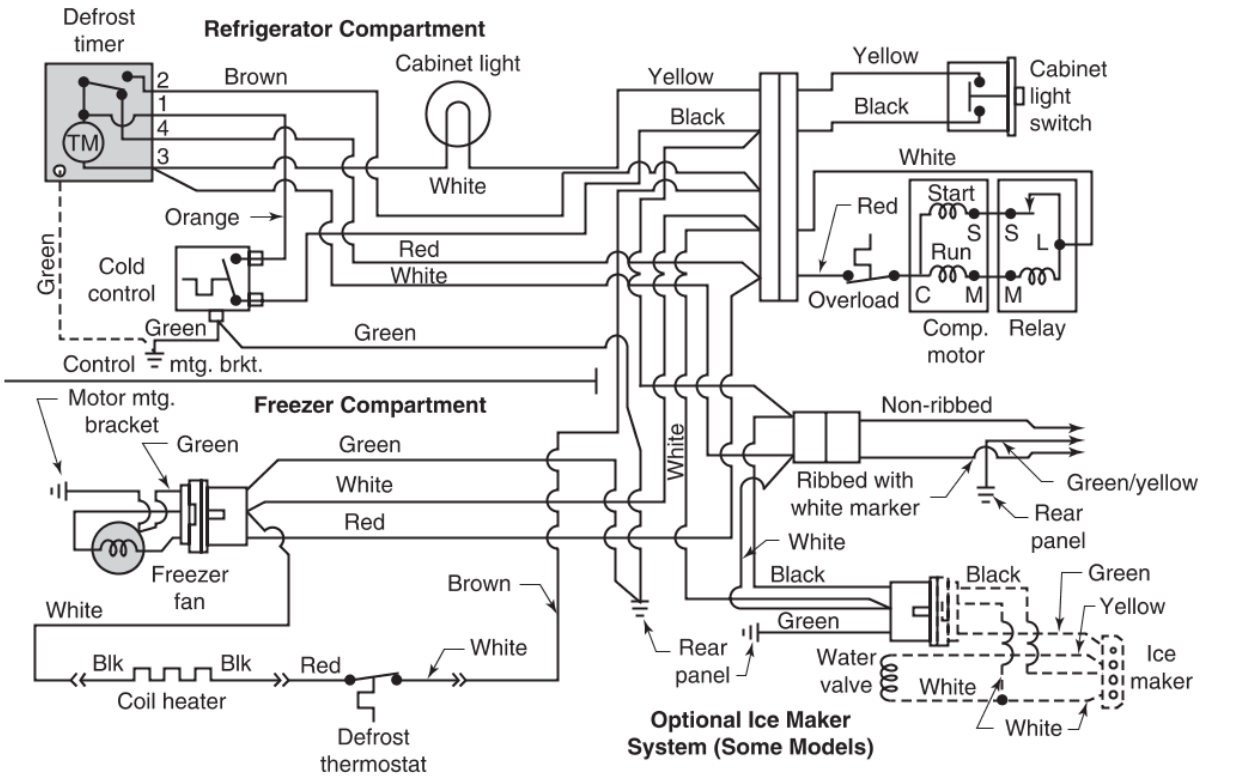

Frigidaire

Figure 25-10. A wiring diagram of a typical domestic, single-door automatic defrost refrigerator with a defrost timer and freezer fan. Note color coding of wiring to aid in tracing the circuits.

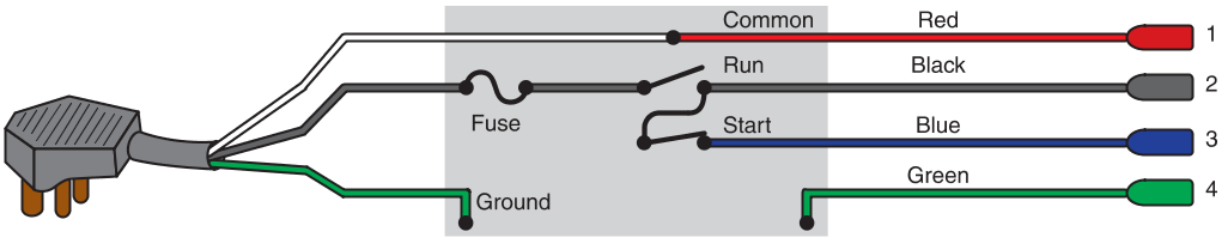

Goodheart-Willcox Publisher

Figure 25-11. A manual start test cord arrangement for hermetic compressors. Clip 1 attaches to the compressor's common terminal. Clip 2 attaches to the run terminal. Clip 3 attaches to the start terminal. Clip 4 attaches to the ground.

After a second or two, open the start switch to drop the start winding out of the circuit. If the motor operates correctly, the problem is in the external circuit.

To test a capacitor-start, induction-run (CSIR) motor, a new start capacitor and an extra jumper cord are required, **Figure 25-13**. Replace the capacitor in the system with a new one of the same voltage and microfarad rating. Connect the wiring as shown in the diagram and operate the circuit as described previously. Close the start switch and then the run switch. Open the start switch after a second or two. If the motor operates correctly, the problem is in the external circuit.

Safety Note

Capacitor Safety

After testing is completed, remember to short the testing capacitor using a 20,000 Ω (20 kΩ), 2 W resistor. This will eliminate the possibility of electrical shock from the capacitor.

To test a capacitor-start, capacitor-run (CSCR) motor, several items are needed: a new start capacitor, a new run capacitor, and several sets of jumper cords, **Figure 25-14**. Use new capacitors of the same rating

Copyright Goodheart-Willcox Co., Inc.

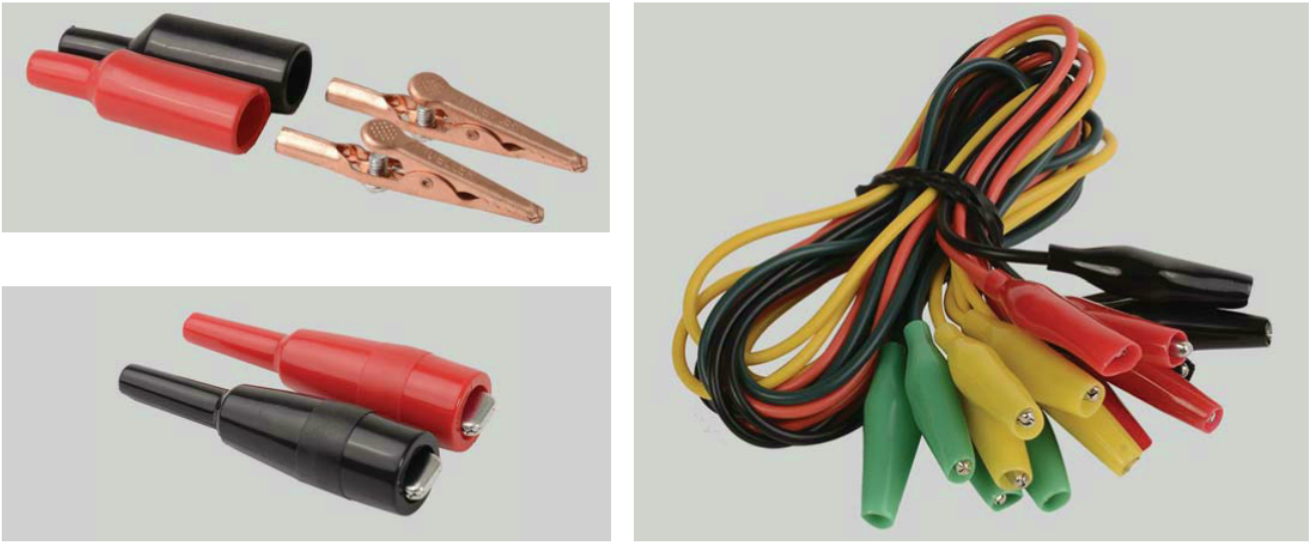

DiversiTech Corporation

Figure 25-12. Use clips with insulated covers for the connectors of a test cord. Keep several jumper cables available for including capacitors in the circuit when necessary.

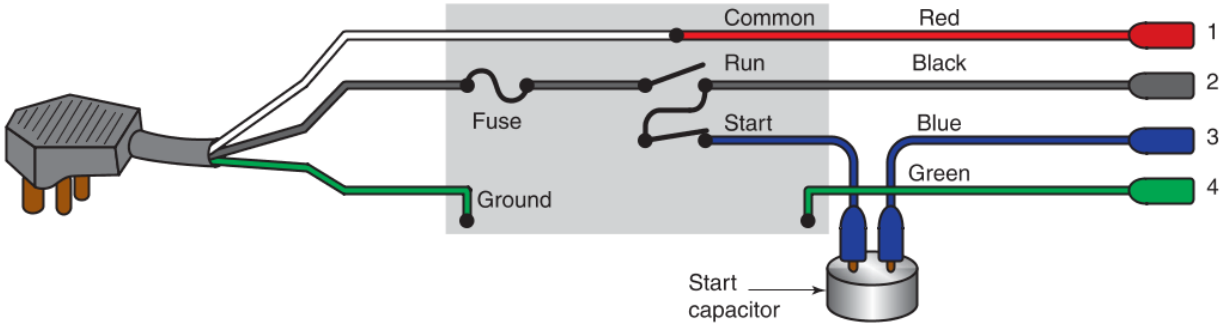

Goodheart-Willcox Publisher

Figure 25-13. Test cord arrangement for a capacitor-start, induction-run (CSIR) motor. Clip 1 attaches to the common winding terminal. Clip 2 attaches to the run winding terminal. Clip 3 attaches to one terminal of a start capacitor. A blue jumper cord should connect the start capacitor's other terminal to the start winding terminal. Clip 4 attaches to the ground.

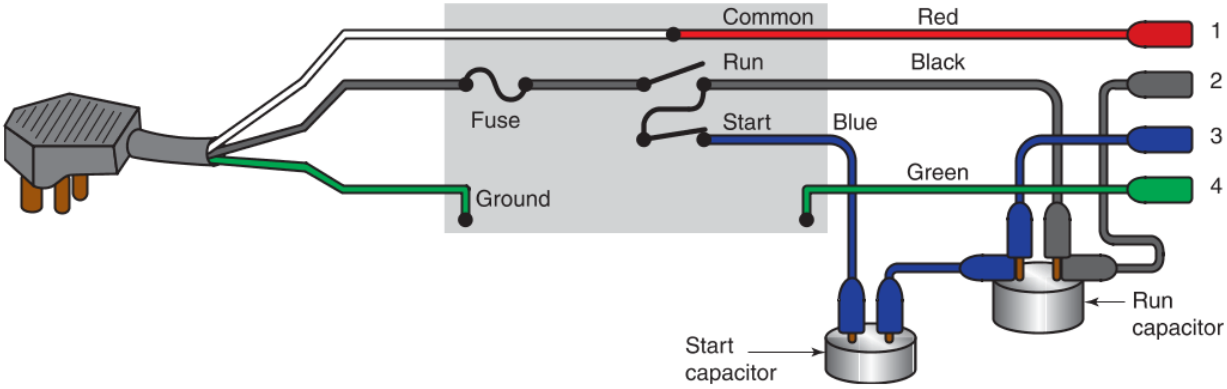

Goodheart-Willcox Publisher

Figure 25-14. Test cord arrangement for a capacitor-start, capacitor-run (CSCR) hermetic motor. Clip 1 is connected to the common winding terminal. Clip 2 is connected to the run winding terminal. Clip 3 is attached to the start winding terminal. Clip 4 is attached to the ground.

Copyright Goodheart-Willcox Co., Inc.

as the ones on the system being tested. Close the start switch and then the run switch. Open the start switch after a second or two. If the motor operates correctly, the problem is in the external circuit. Check the electrical system up to the compressor. If the motor does not operate when tested, further motor checks are needed. These are explained in Chapter 17, *Servicing Electric Motors and Controls*.

Pro Tip

Using Test Cords to Check Continuity

The test cords shown in **Figure 25-11**, **Figure 25-13**, and **Figure 25-14** can be used for checking continuity and grounding by using extra jumper cords to include a lightbulb in series with the circuit being tested.

Ineffective cooling problems can be caused by the evaporator fan motor or the condenser fan motor. A test cord like the one shown in **Figure 25-11** can be used to directly test a fan motor. Clip 1 attaches to the fan, clip 2 attaches to the power terminal, and clip 4 attaches to ground. Open the start switch and leave clip 3 disconnected. Fan motors are usually replaced if they are found to be faulty.

Pro Tip

Fan Motor Replacement

Before removing a fan from a motor shaft, put matching marks on the fan hub and the shaft. This ensures that the fan is positioned correctly on the new shaft.

Electrical failure in a mullion heater may cause a door gasket to freeze to the cabinet. The heater must be checked for continuity with a test light or an ohmmeter. Locate the circuit in the wiring diagram. Disconnect both ends of the mullion heater leads. Then, test the heater for continuity.

If a mullion heater is defective, look for a second (extra) heater in the insulation. Most cabinets have one. Test it also, and connect it if it has continuity. If there is no extra heating unit, install one of the same wattage (volt-ampere) rating.

If the problem is a faulty wire, use a stiff steel wire to pull new wiring through the foamed-in-place insulation. If necessary, drill a hole (up to 1/2″) in the back of the refrigerator to help feed the wires. Seal the hole with silicone sealant after the wire or wires are pulled through.

If the cabinet temperature is not responding properly to the thermostat, the thermostat may be faulty. A set of alligator clips can be used to jump across the terminals of the thermostat, bypassing it. If the compressor starts with the thermostat bypassed, the problem is in the thermostat. If the compressor fails to start with the thermostat bypassed, the problem is elsewhere in the circuit.

If a thermostat will not start the compressor when the cut-in temperature is reached or if it keeps the system running after the cut-out temperature is reached, it should be replaced. If there is time for a return service call on the following day, set up a data logger to record the cabinet temperature over a 24-hour period. The recorded data will show if the appliance is operating properly.

25.4 Diagnosing Internal Troubles

Once you have eliminated external problems as the cause of failure, it is time to troubleshoot the refrigeration system itself. There are many ways to find the cause of trouble inside a small hermetic system. This is done using gauges, thermometers, and electrical instruments, combined with careful observation. A properly trained service technician should be able to locate the cause of any problem in a system.

The evaporator may be partially frosted. This could indicate that not enough refrigerant is flowing through the metering device into the evaporator. As a result, the refrigerant that does enter the evaporator is completely vaporized after passing only partway through it. This lowers the system's cooling capacity and efficiency. This can be caused by a low refrigerant charge or by a partially clogged metering device.

A low refrigerant charge results from a leak in the system. Leaks on new refrigeration units can be the result of manufacturing defects or broken or cracked lines from shipping or installation. Older units may develop leaks as a result of vibration of the tubing, which can cause cracks at the tubing joints.

If liquid refrigerant makes it all the way through the evaporator and into the suction line before vaporizing, frost or sweat may form on the suction line. In a capillary tube system, this can be caused by a broken thermostat or an overcharge of refrigerant. Either of these conditions results in more refrigerant entering the evaporator than there is heat available to vaporize it. As a result, some liquid refrigerant enters the suction line. Liquid refrigerant cannot be compressed by the compressor. If liquid refrigerant enters the compressor, it can cause severe mechanical damage.

Internal electrical troubles, involving the motor and connections, are very rare. Most internal electrical problems come from air and moisture getting into the compressor shell. This causes corrosion in the motor and eventually a burnout.

If liquid refrigerant reaches the compressor, it may remove the oil. The liquid evaporates in the crankcase and carries the oil with it into the condenser. Valves

Copyright Goodheart-Willcox Co., Inc.

may break as the compressor tries to pump oil or liquid refrigerant.

A restriction may occur in the capillary tube, filter-drier, or screen on the high side. This will be indicated by continuous running, no refrigeration, and a condenser that is cooler than normal.

The following paragraphs discuss the most common reasons refrigeration systems do not operate correctly. The descriptions of the testing and repair of refrigeration systems will follow.

25.4.1 Analyzing Temperature-Pressure Conditions

Before servicing a refrigerator, a technician should know the normal values for the following operating conditions:

- Temperature in the evaporator during the operating cycle.
- Pressure in the low side during the operating cycle.
- Temperature of the condenser during the operating cycle.
- Pressure in the high side during the operating cycle.

The temperature-pressure properties vary depending on the type of refrigerant used. **Figure 25-15** lists the average temperature-pressure conditions for the evaporator and condenser of a typical domestic refrigerator-freezer.

Pro Tip

Refrigerants

In the past, the most common refrigerant used in domestic refrigerator-freezers was R-12. Due to the impact on the environment, R-12 has been replaced, mostly by R-134a.

A data logger can be used to determine and record the operating temperatures over a period of time. A gauge manifold can be used to determine the operating pressures. In order to check pressures on a system that is not equipped with service valves, install piercing valves on the suction line and discharge line in order to connect a gauge manifold, **Figure 25-16**.

If the unit will run, operate the system after installing the gauge manifold. The system should be operated through at least three cycles. Carefully record the low-side pressure, high-side pressure, evaporator temperature, and condenser temperature. It is helpful to record a table similar to **Figure 25-17**. This data can be used for future reference.

Service Valves and Adapters on Hermetic Systems

Service valves are used for many purposes:

- To check internal pressures.
- To recover or add refrigerant.
- To add oil.
- To evacuate the system.
- To make it easier to replace driers, compressors, evaporators, and refrigerant controls.
- To recharge the system.

Most refrigerators with hermetic compressors do not have built-in service valves. Some have fittings to which valves can be attached for service operations. The valves are removed from the fittings when the service work has been completed.

Some systems have neither service valves nor fittings on which to attach valves. On such units, piercing valves or process tube adapters must be installed to provide a means of attaching a gauge manifold and other service equipment.

8

Typical Refrigerator Operating Conditions (70°F Ambient)

Condition	Start of Cycle		Middle of Cycle		End of Cycle	
	R-12	R-134a	R-12	R-134a	R-12	R-134a
Evaporator Temperature	15°F	15°F	5°F	5°F	0°F	0°F
Evaporator Pressure	17 psig	14 psig	12 psig	10 psig	9 psig	6 psig
Condenser Temperature	70°F	70°F	100°F	100°F	130°F	130°F
Condenser Pressure	70 psig	71 psig	116 psig	124 psig	180 psig	198 psig

Goodheart-Willcox Publisher

Figure 25-15. This chart lists the average temperature and pressure conditions in domestic refrigerators that use R-12 and R-134a refrigerants. These values are applicable for units that have freezer compartments.

Copyright Goodheart-Willcox Co., Inc.

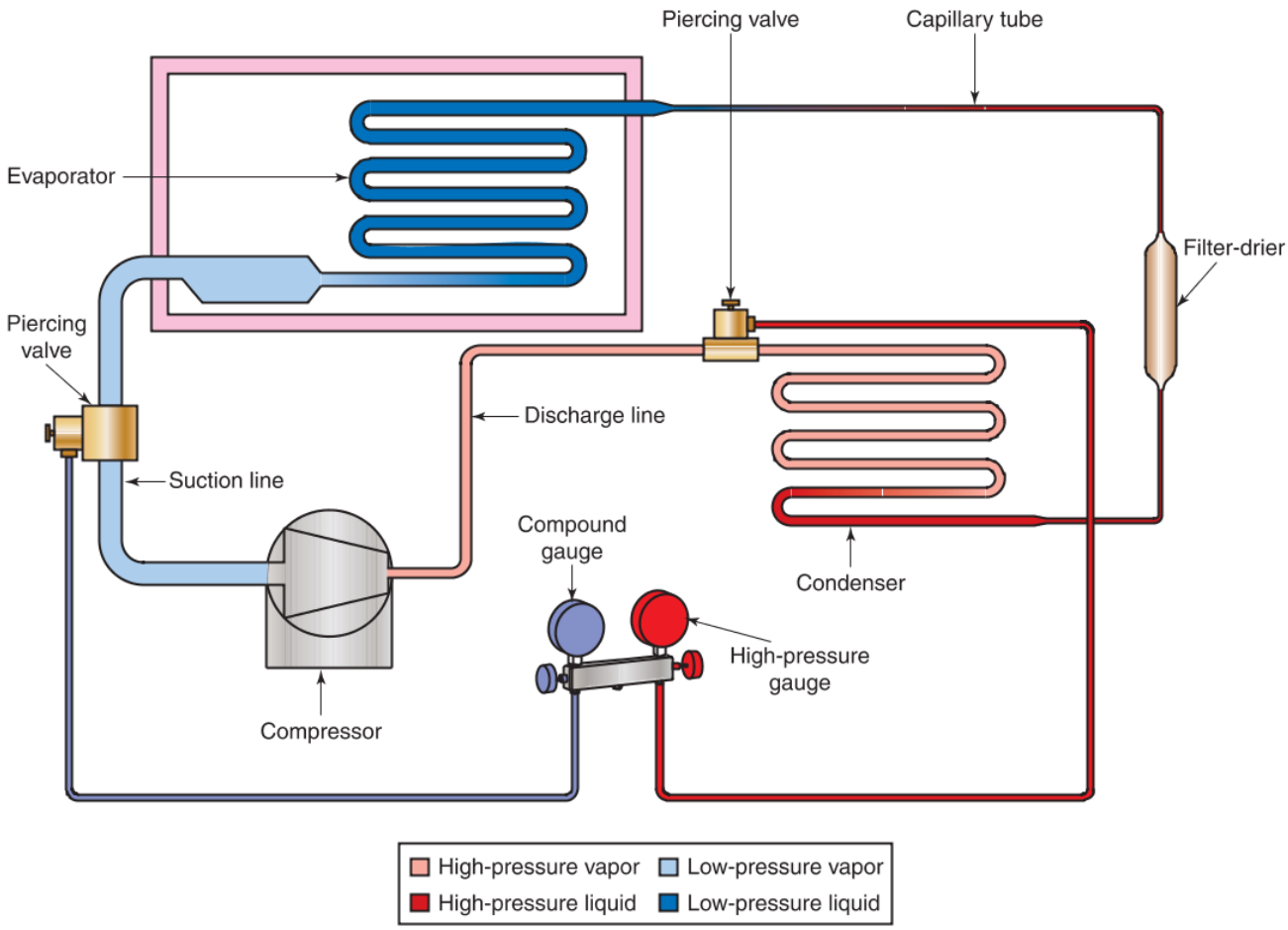

Goodheart-Willcox Publisher

Figure 25-16. A gauge manifold connected to a hermetic system. Piercing valves are used to access a hermetic system that has no service valves.

Typical Refrigerator Statistics			
Condition	**70°F Ambient Temperature**	**90°F Ambient Temperature**	**100°F Ambient Temperature**
Cabinet Temperature	38°F	40°F	47°F
% Operating Time	38	62	100
Cycles per Hour	3	2	None
kWh/24 hrs	3.8	6.0	9.9
Temperature Control Position	4	4	4
Evaporator Air Temperature	1.5°F	–1°F	0°F
Suction Pressure (Min–Max)	2" Hg–13 psig	0–13 psig	13–20 psig
Watts (Complete System)	390±20	395±20	395±20

Goodheart-Willcox Publisher

Figure 25-17. This chart shows operating characteristics of 18 ft^3 combination refrigerator-freezer that has 1/3 hp two-pole single-phase compressor motor.

Copyright Goodheart-Willcox Co., Inc.

Systems with Valve Adapters

Valve adapters provide another method of connecting gauges and charging cylinders to a hermetic system. **Figure 25-18** shows one part of the adapter fastened to the compressor dome. The other part of the adapter has a removable valve stem, **Figure 25-19**, that can be attached to the valve adapter, as shown in **Figure 25-20**.

The valve stem operates a small needle valve mounted in the part of the adapter installed on the compressor. The part of the valve adapter containing the valve stem also has one or more ports for attaching gauges or service hoses. Synthetic or copper gaskets between the valve assembly and compressor fitting seal the joints.

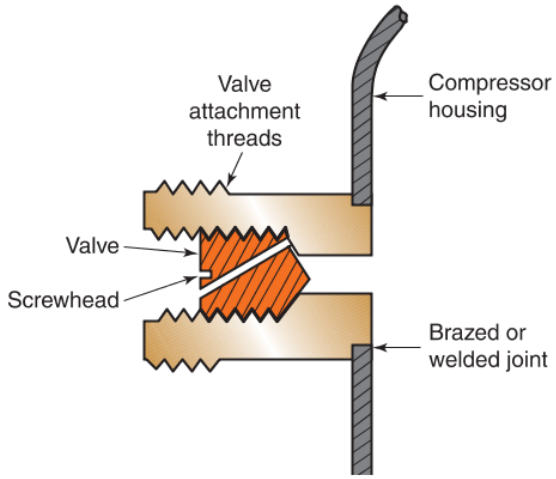

Goodheart-Willcox Publisher

Figure 25-18. Service valve adapter installed in the dome of a hermetic compressor. A valve attachment must be fastened to the adapter before the valve can be opened. If it is not, refrigerant will escape to atmosphere.

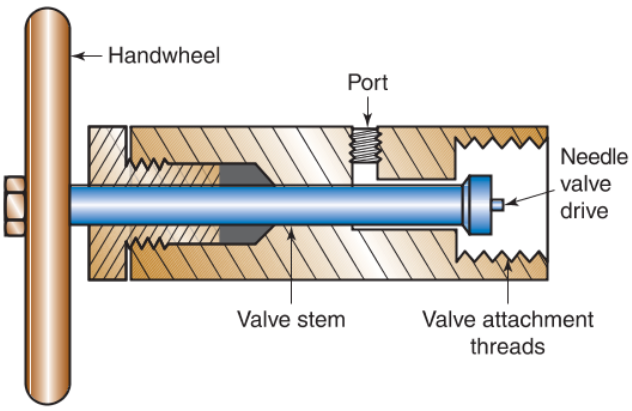

Goodheart-Willcox Publisher

Figure 25-19. A service valve attachment like the one shown is installed on a valve adapter. The handwheel is attached to the valve stem and needle valve drive, which operates the needle valve in the adapter.

Using Valve Adapters

1. Clean the outside of the valve adapter with a clean cloth.
2. Remove the dust cap from the fitting mounted on the compressor dome.
3. Choose the correct valve stem drive.
4. Push the service valve stem forward in the body of the valve attachment.
5. Engage the valve stem in the valve adapter needle.
6. Thread the valve stem portion of the valve adapter unit into the adapter body.
7. Attach the flexible service line to the fitting but leave it loose.
8. Before opening the valve adapter needle, tighten the packing unit around the valve stem.
9. Always test the assembly for leaks using a refrigerant pressure of 15 psig to 20 psig (100 kPa to 140 kPa).

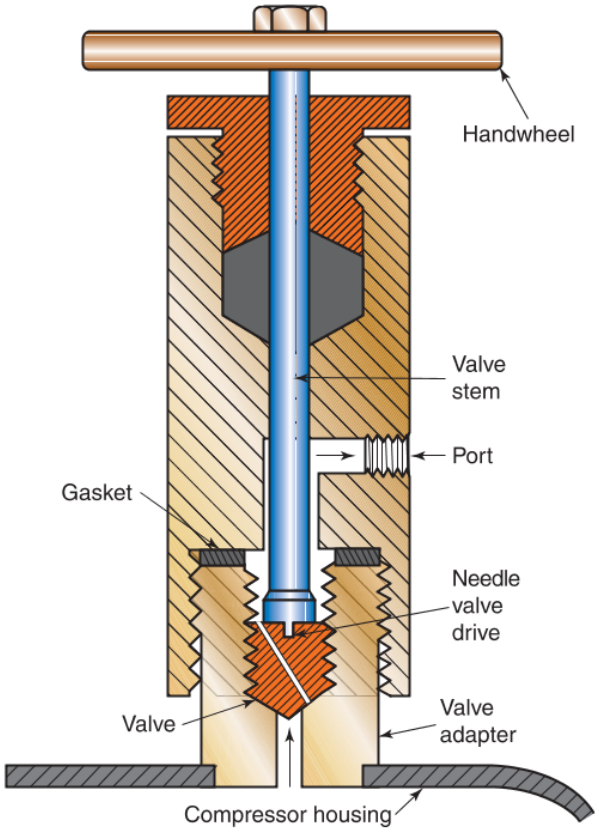

Goodheart-Willcox Publisher

Figure 25-20. This cutaway shows a valve attachment connected to a valve adapter on the housing of a hermetic compressor.

8

Copyright Goodheart-Willcox Co., Inc.

Process Tube and Adapters

Many manufacturers install a small length of tubing through a compressor's housing so they can evacuate, test, and charge the appliance's refrigeration system during the assembly process. Such a tube is known as a ***process tube***. When the assembly process is complete, the process tube is sealed up, but left in the system so it can be used by a service technician.

Access to a hermetic system is possible by first installing a piercing valve to a process tube, brazing on an extension and fitting, or by installing an adapter on the tube. Gauges and other service equipment can then be attached to the process tube. Review Chapter 10, *Equipment and Instruments for Refrigerant Handling and Service*, for more information about piercing valves.

A process tube adapter allows a technician to use the process tube without soldering or brazing on an extension or flaring the tubing. It is installed by cutting off the sealed end of the process tube, sliding the process tube adapter over the process tube, and tightening it. A gauge hose can then be attached to the fitting at the end of the adapter. The adapter provides a positive seal. See **Figure 25-21**.

When service is completed, a pinch-off tool is used to seal off the process tube just behind the adapter, the adapter is removed, and the end of the process tube is then brazed shut.

Pro Tip

Installing a Schrader Valve

When the refrigerant has been recovered from a system, it is always a good practice to install a Schrader valve fitting in the system if it does not already have one. Installing a permanent fitting will make future service work safer and easier.

Safety Note

Phosgene Gas

When brazing a pinched-off process tube on a charged system, make sure that the high-side and low-side pressures are equalized and that you are working in a well-ventilated area. If there is a leak from an improper pinch off, heating leaking refrigerant could create harmful phosgene gas.

Pinch-Off Tool

A ***pinch-off tool*** can apply a great deal of pressure to a small area of soft copper tubing (up to 3/8″ OD) to seal it off. This tool can be used to isolate parts or sections of tubing when an emergency such as a bad leak arises. Lines should be pinched only when absolutely necessary. There are several different types of pinch-off tools. Two common types are shown in **Figure 25-22**.

Another type of pinch-off tool has a screw shaft with a ball bearing on the end that presses against the tube. The tool is placed over the copper tubing in the same manner as a tubing cutter. The tubing is slowly compressed by turning the pinch-off tool handle clockwise. See **Figure 25-23**.

As the handle is turned, the ball bearing presses into the tubing and compresses it against the die on the bottom of the tool. A permanently pinched line is produced. Care must be taken to avoid over tightening the pinch-off tool. The tool should be left in place until the tubing end is sealed by brazing, **Figure 25-24**.

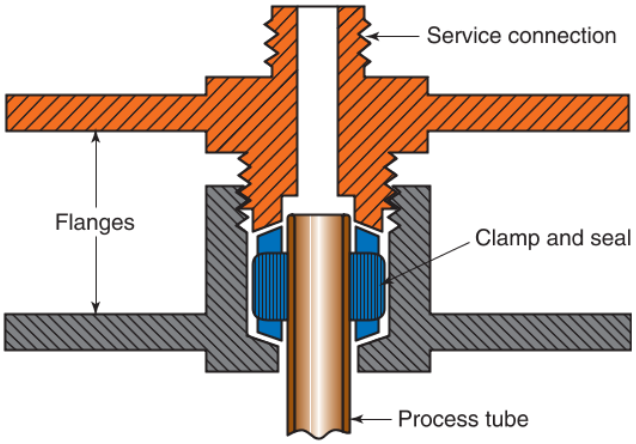

Goodheart-Willcox Publisher

Figure 25-21. Cutaway of a process tube adapter installed on a process tube. As the two flanges are tightened together, the seal is compressed, causing it to expand in the center. This creates a tight seal between the process tube and the flange.

Ritchie Engineering Co., Inc. – YELLOW JACKET Products Division

Figure 25-22. Two styles of pinch-off tools. A—This type of pinch-off tool resembles and operates like locking pliers. B—On this type of pinch-off tool, the wing nuts are loosened. The tubing is inserted through the rectangular jaws in the center of the tool. The wing nuts are then tightened to deform and seal the tubing.

Copyright Goodheart-Willcox Co., Inc.

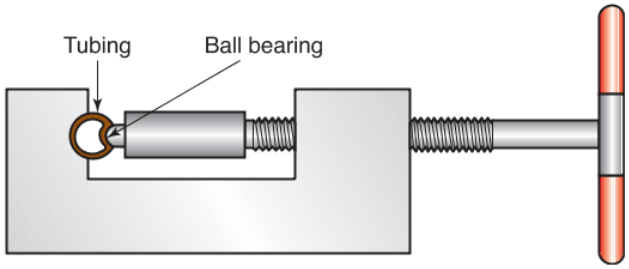

Goodheart-Willcox Publisher

Figure 25-23. Ball bearing–type pinch-off tool.

Effect of Altitude on Refrigerator Temperatures

A refrigeration system with a sensing bulb thermostat calibrated for use at sea level may run too cold at elevations above 5000′. This is a result of the decreased atmospheric pressure at higher elevations. Changes in altitude affect only pressure-sensitive elements. Altitude does not affect bimetal and electronic thermostats.

As altitude rises, atmospheric pressure drops. Beyond certain elevations, the reduced atmospheric pressure lowers the pressure on a pressure control's diaphragm or bellows enough to affect the settings. The altitude adjustment and range control pressure for the bellows or diaphragm should be increased if the system will be operating at a high elevation. This adjustment compensates for the lower atmospheric pressure.

To adjust for altitude, the cut-in and cut-out adjustment screws are turned the appropriate number of degrees. The location of the adjustment screws and the adjustment procedure varies from model to model. Always check the service manual of the equipment being serviced. **Figure 25-25** shows one thermostat with an altitude adjustment and its altitude adjustment table.

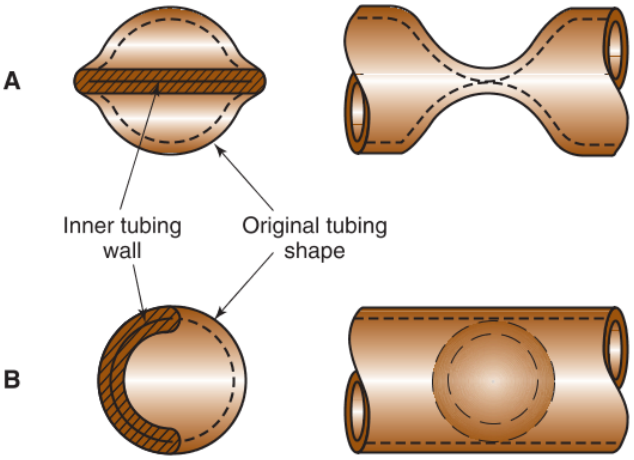

Goodheart-Willcox Publisher

Figure 25-24. Pinch-off tool deformations. A—Flat deformation pinch-off seal. B—Half-circle deformation pinch-off seal.

25.4.2 Identifying Common Problems

The following are common conditions that can develop inside a system and negatively affect its performance. Being familiar with these common problems will help a technician effectively diagnose and repair a malfunctioning system.

The presence of a restriction can be checked by looking at the high-side and low-side pressures. If a restriction is present at the metering device, the high-side pressure will be very high, and the low-side pressure will be very low. For example, an R-134a system that normally operates with a suction pressure of 5–10 psig and head pressure of 150 psig may have a vacuum on the low side and a head pressure over 200 psig.

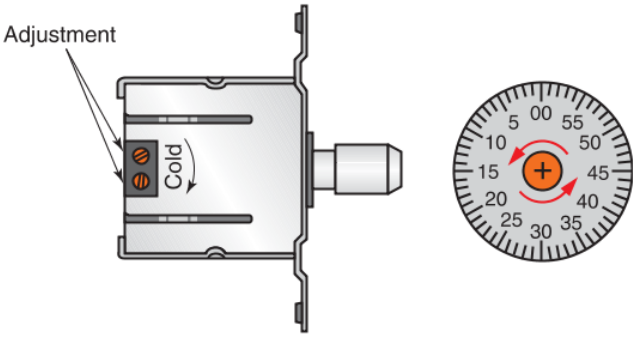

For altitude correction, both "cut-in" and "cut-out" screws must be adjusted

Altitude in Feet	Counterclockwise Turns
2,000	7/60
3,000	13/60
4,000	19/60
5,000	25/60
6,000	31/60
7,000	37/60
8,000	43/60
9,000	49/60
10,000	55/60

This scale may be used as a guide for measuring degrees of rotation required for altitude correction. The arrows indicate direction of screw rotation.

Amana Refrigeration, Inc.

Figure 25-25. Thermostat equipped with an altitude adjustment. The table indicates the correct setting for various elevations.

Copyright Goodheart-Willcox Co., Inc.

Moisture in the Refrigerant Circuit

Moisture in the refrigerant system will cause a unit to malfunction. The moisture forms ice in the metering device at the point where liquid refrigerant is expanding into the evaporator. Ice closes the opening, blocking flow into the evaporator. This condition can be recognized by the following symptoms:

- If the system is completely defrosted, the ice that caused the blockage disappears. The unit will then work properly again. However, the unit will only work until ice again forms at the metering device.
- Pressure decreases in the suction line. The compound gauge shows a steady decrease over several hours (even to a vacuum). Then, pressure suddenly becomes normal again. This odd cycle will keep repeating.
- Warm the metering device with a safe resistance heater (hot pad) or radiant heat bulb during system shutdown to melt any ice buildup. If the system then begins to work properly, there is definitely moisture in the refrigerant.

Moisture in the refrigerant circuit also creates corrosion problems within the system. This occurs when refrigerants react with water molecules to form acids. The acids increase the amount of corrosion in the system. Excessive moisture in a system indicates that the filter-drier is clogged. Refer to Chapter 26, *Service and Repair of Domestic Refrigerators and Freezers*, for information about replacing filter-driers.

There are certain substances that can be placed in the refrigerant circuit to keep moisture from forming ice. However, a new filter-drier is the best solution. It prevents circulation of the moisture through the system. It also reduces the chance of oil breakdown, which results in sludge and acid.

Wax

Manufacturers have removed as much wax as possible from refrigeration oil, but some wax still remains. Some oil circulates with the refrigerant. Sudden expansion at the refrigerant control and its low temperature and pressure cause some wax to separate from the oil. The wax collects in the metering device. In time, it may build up sufficiently to restrict flow or completely clog the metering device.

If there is a restriction in the metering device, it should be determined whether the restriction is caused by wax or ice. If the metering device is clogged with ice, it may be fixed by installing a new filter-drier, as explained in the previous section. If the metering device is clogged with wax, both the metering device and the filter-drier must be replaced. Procedures for replacing metering devices are presented in Chapter 26, *Service and Repair of Domestic Refrigerators and Freezers*.

Shortage of Refrigerant

A shortage of refrigerant is another common cause of poor refrigeration. If a shortage of refrigerant is found, it is often the result of a leak. Small systems have only one or two pounds of refrigerant. Therefore, even the smallest leak will soon cause poor refrigeration. A leak with a loss rate as low as one ounce per year can be located and must be repaired. The following conditions indicate a lack of refrigerant:

- Low-side pressure is below normal.
- The outlet end of the evaporator is warm.
- High-side pressure is below normal.

25.4.3 Diagnosing Specific Component Problems

Before removing any system component, be certain that it is the cause of the problem. After diagnosing the system by visual inspection and by analyzing system performance, perform pinpoint tests of the suspected components before replacing them. The following are parts that frequently cause trouble:

- Compressor.
- Filter-drier.
- Metering device (capillary tube or AEV).
- Hot-gas defrosting valve.

Locating Compressor Faults

The most expensive service item for a domestic refrigerator is the replacement of the compressor. The technician should carefully check for all other electrical and mechanical failures before determining that the compressor needs replacement. When a compressor is in good condition, the most common reason for replacement is an electrical fault.

Other electrical problems often mislead a service technician into thinking the compressor is at fault. To check a compressor, first disconnect power to the unit and then clean the outside of the compressor dome. Then, remove the cover over the electrical connections. Disconnect the system wiring from the compressor: relay, capacitors, overload cutout, and all wiring. Use an ohmmeter to check motor windings for continuity, shorts, and grounds. Refer to Chapter 17, *Servicing Electric Motors and Controls*. If the unit checks out correctly, connect a test cord to the compressor. Use the correct size of capacitors and fuse. Connect the starting circuit as shown in **Figure 25-26**.

If the system starts and operates correctly with these manual-start electrical connections, the problem is in the external system. It may be in the wiring, thermostat, relay, or overload cutout. If the internal electrical motor is faulty, the compressor must be replaced. If

Copyright Goodheart-Willcox Co., Inc.

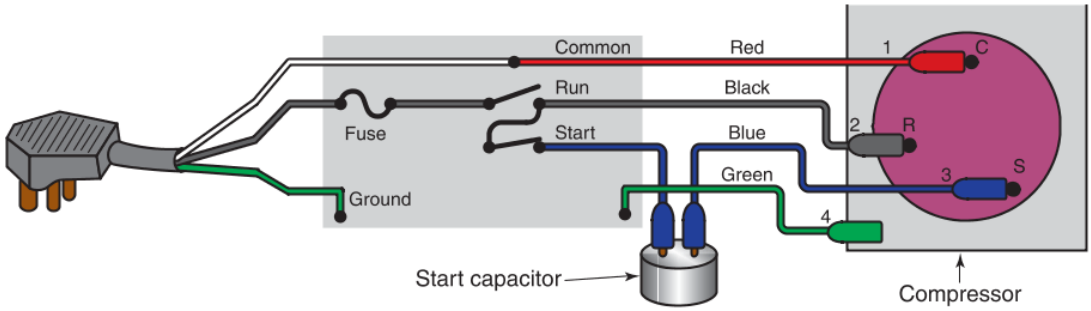

Goodheart-Willcox Publisher

Figure 25-26. To test a capacitor-start compressor, remove all electrical leads and then connect a test cord as shown. If the compressor operates properly when manually started, the problem is external.

the electrical system operates correctly, the compressor may not be pumping.

The best check of the compressor is its volt-ampere (watt) reading at normal low-side and high-side pressures. If the volt-ampere reading is below the motor's rating, the pump may be worn out.

If the compressor is operating correctly but not building up pressure, check for internal problems with the compressor. To check the compressor's pumping ability, install a piercing valve on the suction line and attach a compound gauge. Pinch the suction line as shown in **Figure 25-27**. Next, run the

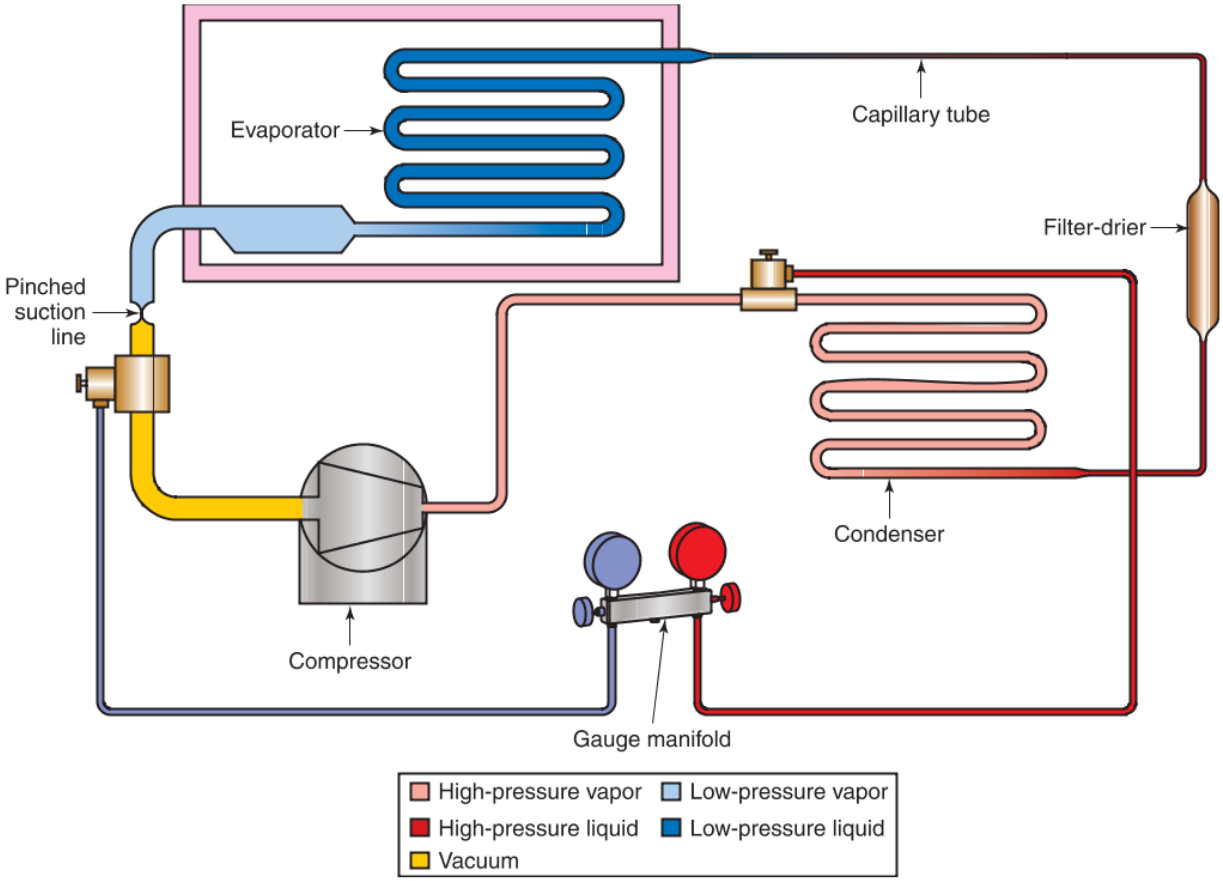

Goodheart-Willcox Publisher

Figure 25-27. A compressor's capacity can be tested by pinching the suction line and then running the compressor. The compressor must only be allowed to run for a very brief period of time, otherwise the motor will overheat. The compressor should pull 25 in. Hg to 28 in. Hg of vacuum within a few seconds. The yellow area indicates the vacuum in the line.

Copyright Goodheart-Willcox Co., Inc.

unit briefly to determine how much of a vacuum it will pull. It should pull between 25 in. Hg and 28 in. Hg (7 kPa and 17 kPa) of vacuum. Stop the compressor.

If the pressure gradually drops to 20 in. Hg (34 kPa) of vacuum, then rises toward 10 in. Hg (68 kPa) of vacuum, the compressor is not holding vacuum. This indicates the exhaust valves of the compressor are leaking. The compressor must be replaced or overhauled. If the compressor holds a vacuum, the refrigerant needs to be recovered, and the part of the suction line that was pinched must be replaced.

Diagnosing Capillary Tube Problems

Capillary tubes must be correctly sized. Their inside diameters (ID) and lengths must be correct for the capacity of the system and the desired evaporator temperatures.

Figure 25-28A shows a capillary system of correct design. The undersized capillary tube in **Figure 25-28B** creates too much resistance. It is either too long or it has an undersized inside diameter. Note that the improperly sized capillary tube causes a starved evaporator. A starved evaporator could also be caused by a partially clogged filter-drier or capillary tube.

The amount of refrigerant in a capillary tube system is critical. Refer to **Figure 25-29**. Notice the change

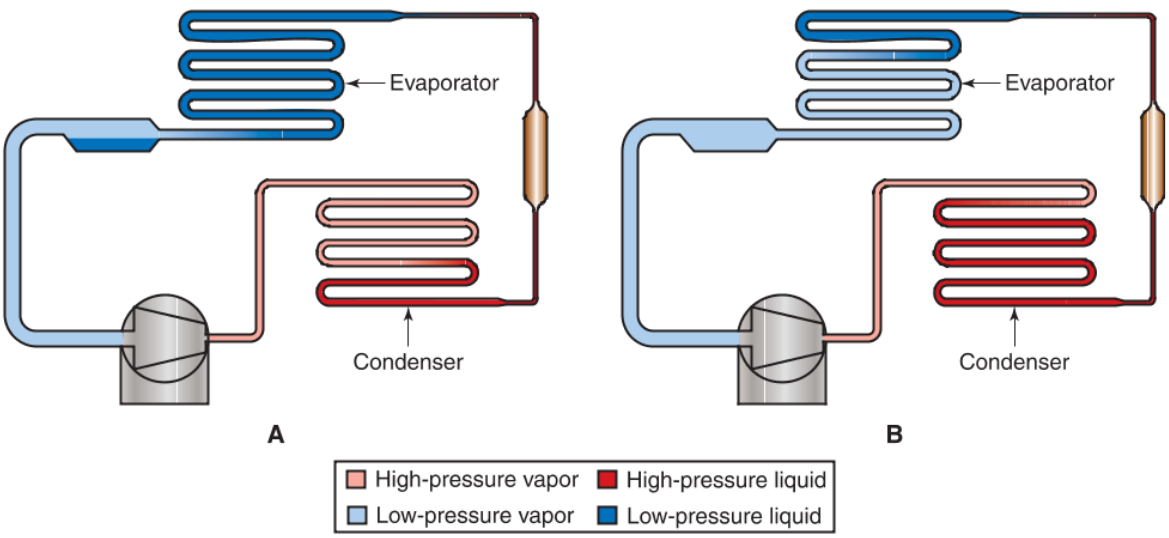

Goodheart-Willcox Publisher

Figure 25-28. The effects of properly sized and improperly sized capillary tubes. A—A capillary tube that is properly selected for capacity prevents excess liquid from backing up into the condenser and keeps the evaporator adequately filled with liquid. B—A capillary tube that does not have enough capacity results in too much resistance in the tube. Liquid backs up into the condenser and the evaporator is "starved." The discharge pressure may be abnormally high and the suction pressure may be abnormally low. Liquid line refrigerant should have high subcooling.

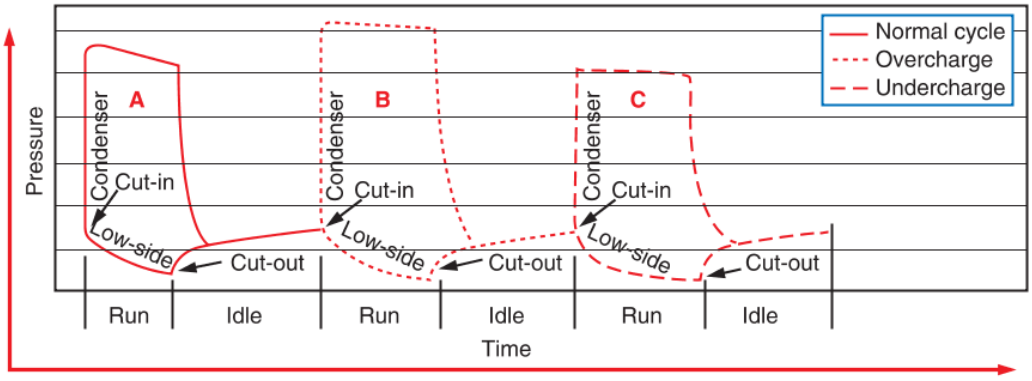

Goodheart-Willcox Publisher

Figure 25-29. Pressure-time diagram showing the refrigeration cycles of capillary tube systems charged with different amounts of refrigerant. A—Proper charge. B—Overcharge. Overcharge will usually cause a frosted or sweating suction line. C—Undercharge.

Copyright Goodheart-Willcox Co., Inc.

in head pressure as the charge of refrigerant changes. If the system is undercharged, as in C, the evaporator will not receive enough refrigerant. The system may run all the time. If the system is overcharged, as in B, the liquid refrigerant may flow down the suction line and cause oil-slugging in the compressor. The suction line will sweat and even frost up all the way to the compressor.

Checking for a Clogged Capillary Tube or Filter-Drier

To check the capillary tube, run the system for a few minutes. Stop the unit and listen where the capillary tube enters the evaporator. If there is no hissing sound, the capillary tube is clogged.

Heat the evaporator end of the capillary tube with a rag and warm water. *Do not use a flame.* If the clogging is from ice, there will be a hissing sound as it melts. A clogged filter-drier or capillary tube will cause refrigerant to back up into the condenser. The compressor may stop or it may overload during start-up.

Pinpointing a Restriction

Use the following procedure to determine whether the problem is a result of a clogged filter-drier or a clogged capillary tube:

1. Recover the refrigerant.
2. Clean the connection between the filter-drier and the capillary tube. Flux it, heat it, and separate the capillary tube from the filter-drier. The system can now be checked to find out if either the filter-drier or the capillary tube is clogged.
3. To find which component is at fault, hook up a nitrogen cylinder as shown in **Figure 25-30**.

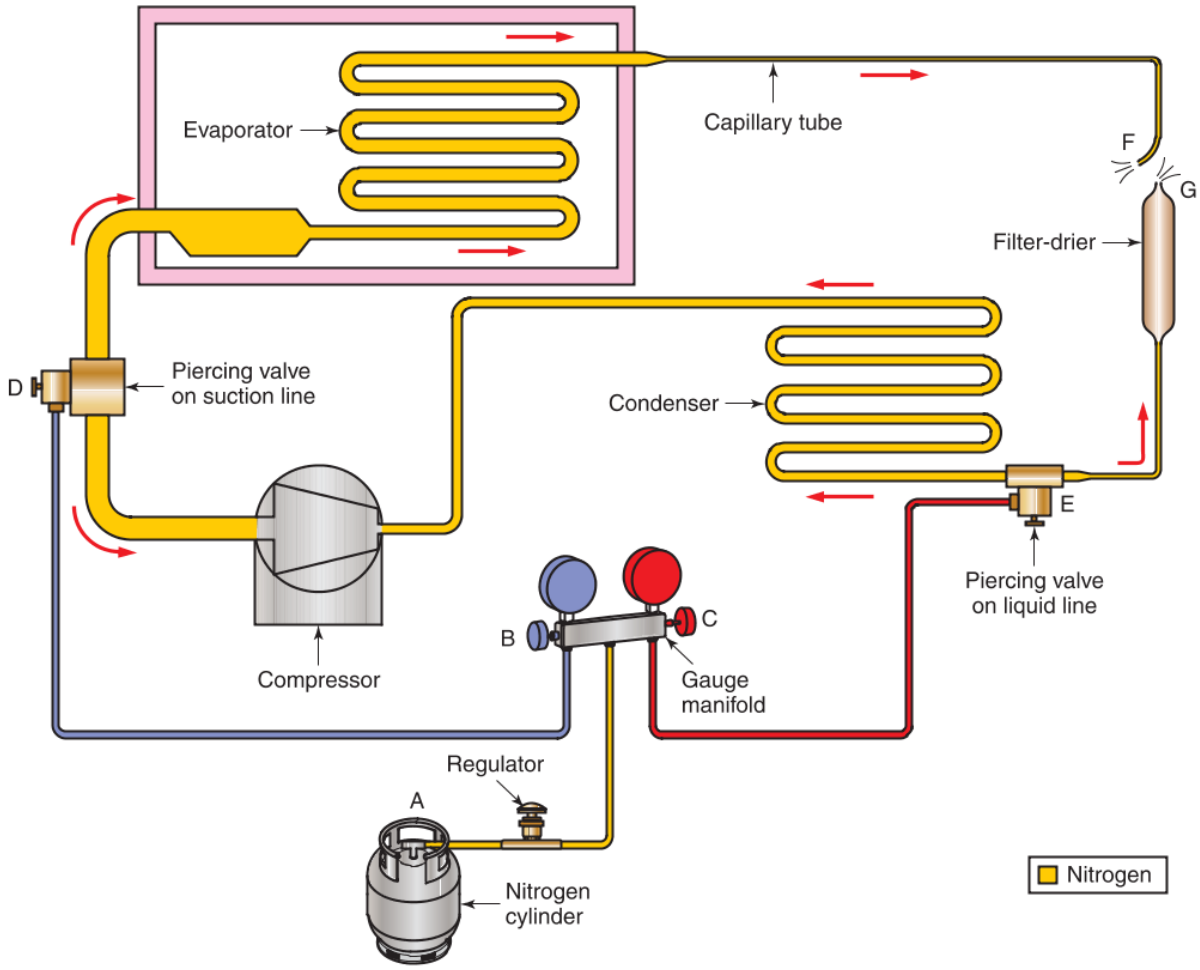

Goodheart-Willcox Publisher

Figure 25-30. To check whether the capillary tube or the filter-drier is clogged, disconnect the capillary tube from the filter-drier. Charge some nitrogen into the system by opening valves A, B, C, D, and E. Then check the flow at F and G.

Copyright Goodheart-Willcox Co., Inc.

4. Open the nitrogen cylinder valve and set the pressure regulator to a limited pressure. Once set, open the gauge manifold valves and the piercing valves. If the filter-drier is open, nitrogen will come out of its open end. If the capillary tube is open, a small flow (because the tube is small) will come out its opening. If either one is clogged, there will be no flow through it.

Clogged filter-driers must be replaced. Sometimes clogged capillary tubes can be opened with a high-pressure hydraulic pump. Repair and replacement procedures are presented in Chapter 26, *Service and Repair of Domestic Refrigerators and Freezers*.

Pro Tip

Filter-Drier Replacement

The filter-drier should be replaced any time the refrigerant circuit is opened, regardless of whether the filter-drier is the point of restriction or not.

Post-Condenser (PC) Loop Problems

Earlier, it was pointed out that some domestic refrigerator-freezers are equipped with post-condenser (Yoder) loops that heat the cabinet exterior to prevent condensation from forming. These loops carry refrigerant and therefore can be the source of refrigerant leaks.

One problem with PC loop service is the inability to replace the loop if it develops a leak. The most common reason for a leak in a PC loop is a screw that has been mistakenly driven into the loop. If the loop were improperly placed during the foaming process, it could be in the direct path of a planned screw. To determine if the loop is indeed a source of a sealed system leak, the loop must be isolated from the rest of the system. An access valve must be attached, a nitrogen charge pressurized into the loop, and a compound gauge connected to monitor pressure. With that part of the system isolated and pressurized, if the pressure reading drops, then there is a leak in the loop. If the pressure holds steady, look elsewhere for the refrigerant leak.

Electric Resistance Defrost Problems

If a defrost system does not work, ice can build up on the evaporator and make it ineffective. If ice builds up on the evaporator, begin by checking the evaporator fan. If it is working, check the defrost system. Inspect and electrically-test the defrost resistance wire.

Hot-Gas Defrost Problems

Problems in hot-gas defrost systems are often related to the hot-gas bypass valve. The hot-gas bypass valve is usually operated by a solenoid. This solenoid can fail with the valve in the open position, which would cause the defrost system to operate all the time, keeping the evaporator excessively warm. The solenoid could also fail with the valve in the closed position, which would cause a complete failure of the defrost system.

If the evaporator is overloaded with ice, the solenoid's electric coil may have failed with the valve in the closed position (open circuit), or the timer may not be operating correctly. Both of these problems can be checked electrically.

If the electrical system is operating correctly, the problem is probably a stuck valve stem in the solenoid. Sharply rap the solenoid valve body while the defrost timer switch is closed. If the valve stem comes loose, the surge of hot gas can be heard. The line between the solenoid valve and the evaporator will also become warm to the touch.

If the evaporator and the line between the hot-gas solenoid valve and evaporator are warm, the valve is probably stuck open, **Figure 25-31**. Again, rap the valve sharply while the defrost timer circuit is open. If the valve closes, low-side pressure will start to decrease immediately. The evaporator will start to cool and frost. If the solenoid valve still does not operate after trying these solutions, it must be removed and replaced.

Copyright Goodheart-Willcox Co., Inc.

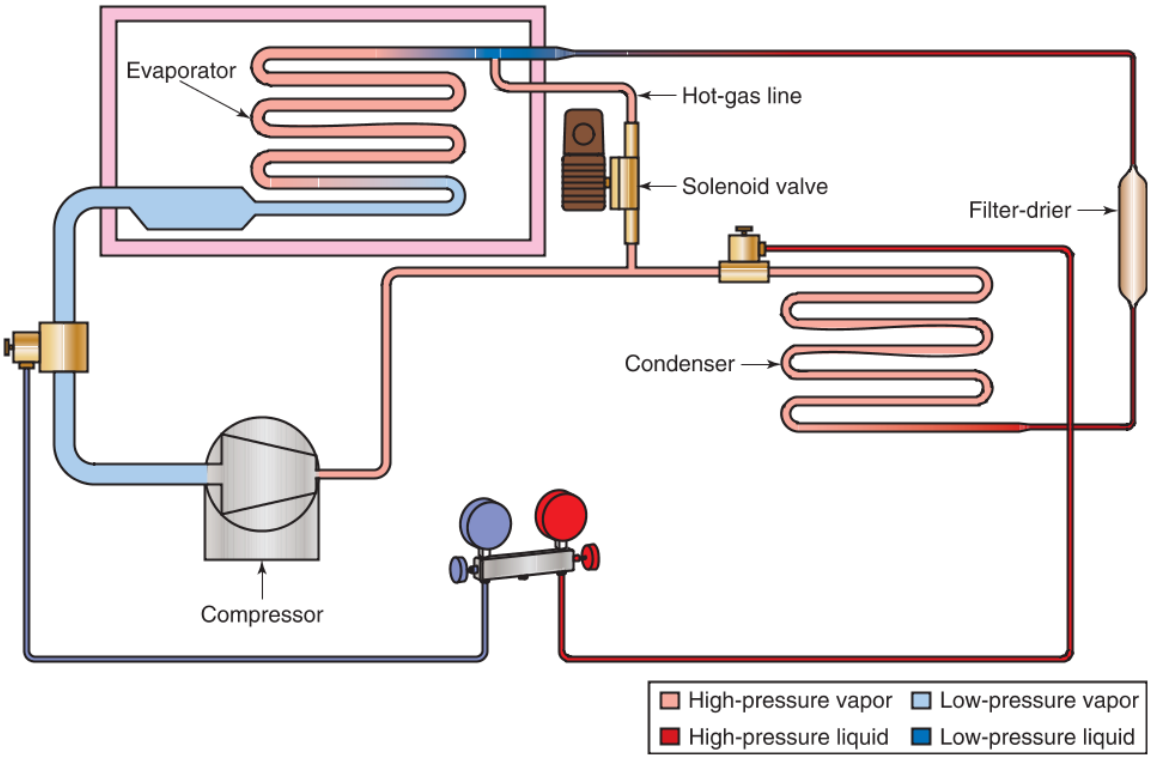

Goodheart-Willcox Publisher

Figure 25-31. Diagram of a hot-gas defrost system with solenoid valve stuck open.

Copyright Goodheart-Willcox Co., Inc.

Chapter Review

Summary

- To check a refrigerator-freezer for proper installation, begin by inspecting the unit for damage resulting from shipping or improper handling. Ensure that the unit is level and has adequate ventilation for its type of condenser.
- Ice makers should be attached to a cold-water supply line and the water supply tubing should be long enough to allow the refrigerator to be moved for cleaning and servicing without disconnecting or damaging the tubing.
- The refrigerator should be on a separate electrical circuit and properly grounded.
- If a refrigerator fails to start, check the supplied power and then check for electrical problems. Finally, check for mechanical problems.
- The troubleshooting process should begin with a visual inspection of the system. The next step after performing a visual inspection is determining possible causes of the symptoms.
- Troubleshooting charts are useful tools for determining possible causes of common symptoms. Some common symptoms include ice on the evaporator, moisture in the cabinet insulation, unusual noises, unusual cycling times, and failure to cool.
- Eliminate possible external causes for symptoms before assuming the problem is in an internal component. Use proper electrical troubleshooting techniques to make sure there are no problems with the power-in connections, thermostats, overload protection, relays, or capacitors.
- A sweating or frosted suction line indicates that liquid refrigerant is getting into the suction line. Excessive frosting on the capillary tube or filter-drier and a warm evaporator indicate that not enough refrigerant is reaching the evaporator.
- Service valves are usually not built into hermetic systems. However, valve adapters or piercing valves can be installed in the system to provide a technician with a means to connect gauges and service equipment to the system.
- Excessively low low-side pressure can be caused by a restriction in the system or a lack of refrigerant.
- Ice formation in the refrigerant circuit can cause a restriction and is an indication of excess moisture in the refrigerant. To correct this problem, thaw the ice blockage, recover and filter the refrigerant charge, and install a new filter-drier to remove the excess moisture. Pull a vacuum on the system and recharge it with the proper amount of refrigerant.
- Wax buildup can clog a metering device. If a shortage of refrigerant in the evaporator is found to be caused by wax buildup instead of ice, replace the metering device and filter-drier and also replace the refrigerant oil with a high-quality low-wax oil.
- Once you have diagnosed a system based on visual inspection and analysis of system performance, perform pinpoint tests to make sure the suspected component is faulty before replacing it. Internal system components that typically cause problems are compressors, filter-driers, metering devices, hot-gas defrost bypass valves, and electric defrost resistance heaters.

Review Questions

Answer the following questions using the information in this chapter.

1. Which of the following statements regarding shipping bolts is *not* true?
   A. If the compressor is spring mounted, the shipping bolts are usually removed after the unit is installed.
   B. If the compressor is mounted on synthetic grommets, the shipping bolts must be tightened after the unit is installed.
   C. The purpose of shipping bolts is to secure the compressor during shipping.
   D. All of the above.
2. Which of the following statements about installing refrigerators is *not* true?
   A. A refrigerator-freezer should only be placed in a room that is large enough to provide sufficient air to cool the condenser.
   B. A refrigerator-freezer should be positioned away from potential heat sources, such as ovens, radiators, and warm air registers.
   C. A refrigerator-freezer should be positioned in direct sunlight.
   D. Technicians can use a spirit level, wood shims, and levelers to install a refrigerator that is level.
3. Why should there be several large loops in the tubing connecting the water line to a refrigerator's water line fitting?
   A. To prevent condensation from forming on the water line.
   B. To ensure an adequate pressure drop in the water supply.
   C. To allow the refrigerator to be moved without disconnecting the water connection.
   D. None of the above.

Copyright Goodheart-Willcox Co., Inc.

4. What is the main reason *not* to use an extension cord to connect a refrigerator to an outlet?
   A. An extension cord cannot provide an adequate ground.
   B. An extension cord may cause an unacceptable voltage drop.
   C. An extension cord removes overload protection of the circuit.
   D. All of the above.
5. How much air space must be provided around all sides of a refrigerator or freezer with a hot-wall condenser?
   A. 2″ (51 mm)
   B. 6″ (154 mm)
   C. 12″ (307 mm)
   D. 24″ (614 mm)
6. If a refrigerator will not start and the interior light does not come on when the door is opened, which of the following is the most likely cause of the problem?
   A. A problem in the motor control circuits.
   B. A mechanical problem in compressor.
   C. A problem in the electrical supply circuit.
   D. Excessive head pressure.
7. Which of the following conditions can cause a buildup of frost on an evaporator?
   A. A leaky door gasket.
   B. A clogged metering device.
   C. A clogged filter-drier.
   D. A dirty condenser.
8. Which of the following would prevent a newly installed ice maker from operating properly?
   A. The signal arm is in the down position.
   B. The temperature of the ice mold does not drop below 20°F (–7°C).
   C. The thermostat is wired in series with the mold heater.
   D. All of the above.
9. Which of the following affects a refrigerator or freezer cycling time?
   A. Amount of storage space inside the cabinet.
   B. Temperature outside the cabinet.
   C. Compressor condition.
   D. All of the above.
10. If a refrigerator-freezer operates, but the cabinet is too warm, which of the following is the most likely cause?
   A. The compressor motor is running in reverse.
   B. The evaporator is iced over.
   C. A problem with the electrical supply circuit.
   D. A problem with the mullion heater.
11. Wires used for grounding are usually _____.
   A. black
   B. green
   C. red
   D. white
12. Which of the following is the best test a technician can perform to see if the thermostat is the cause of a no-start condition?
   A. Bypass the thermostat. If the system does not start, the problem is in the thermostat.
   B. Bypass the thermostat. If the system starts, the problem is in the thermostat.
   C. Turn the thermostat to its highest setting. If the system does not start, the problem is in the thermostat.
   D. Turn the thermostat to its lowest setting. If the system does not start, the problem is in the thermostat.
13. Which of the following conditions can result in frost on the suction line?
   A. An insufficient refrigerant charge.
   B. An overcharge of refrigerant.
   C. A partially clogged metering device.
   D. All of the above.
14. A _____ is a small length of sealed tubing that extends out through a compressor housing and is used to service the system.
   A. discharge stub
   B. process tube
   C. suction tube
   D. valve adapter
15. A system has symptoms corresponding to a restriction in the metering device, but begins working properly again when heat is applied to the metering device. Which of the following is the most likely cause?
   A. Leaking compressor valves.
   B. Moisture in the system.
   C. Shortage of refrigerant.
   D. Wax buildup clogging the metering device.

Copyright Goodheart-Willcox Co., Inc.

CHAPTER 26 Service and Repair of Domestic Refrigerators and Freezers

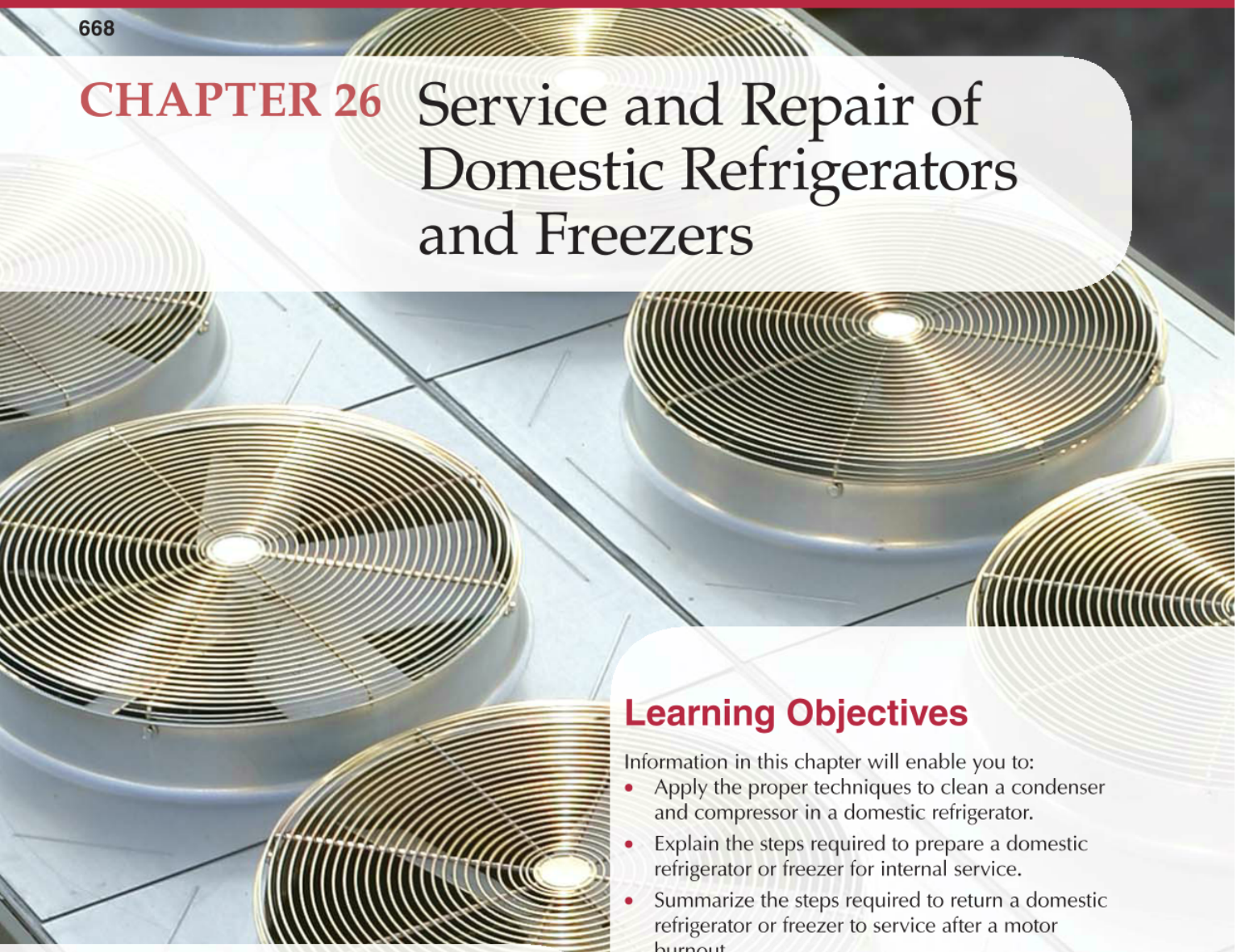

Learning Objectives

Information in this chapter will enable you to:

- Apply the proper techniques to clean a condenser and compressor in a domestic refrigerator.
- Explain the steps required to prepare a domestic refrigerator or freezer for internal service.
- Summarize the steps required to return a domestic refrigerator or freezer to service after a motor burnout.
- Apply the proper procedure to remove and replace a compressor in a domestic refrigerator or freezer.
- Use the proper procedures to repair leaks in condensers and evaporators.
- Apply the proper procedures to clean or replace a capillary tube.
- Summarize the procedure for selecting, removing, and installing filter-driers.
- Compare the different methods of charging a small hermetic refrigeration system.
- Summarize different methods of calibrating, testing, and adjusting thermostatic controls in refrigerator-freezers.
- Explain considerations to take when removing system components from a cabinet.
- Summarize the steps required to properly discard or store a domestic refrigerator or freezer.

Chapter Outline

26.1 External Service Operations
- 26.1.1 Cleaning the Condenser and Compressor
- 26.1.2 Using Pressurized Air for Cleaning

26.2 Internal Service Operations
- 26.2.1 Replacing a Hermetic Compressor
- 26.2.2 Installing a Hermetic Compressor
- 26.2.3 Repairing Condenser Leaks
- 26.2.4 Repairing Evaporators
- 26.2.5 Servicing Capillary Tubes
- 26.2.6 Servicing Filter-Driers
- 26.2.7 Evacuating and Charging a Hermetic System
- 26.2.8 Installing and Servicing Thermostats
- 26.2.9 Removing System Components from the Cabinet

26.3 Storing or Discarding a Refrigerator-Freezer

Technical Terms

acid test kit
breaker strips
burnout
epoxy repair kit
high head pressure
solid desiccant

Review of Key Concepts

Reviewing these concepts from earlier chapters will help you understand new concepts presented in this chapter:

- Refrigerant recovery is the removal of refrigerant from a refrigeration system in whatever condition that refrigerant may be. Sequential steps must be followed during a recovery process. (Chapter 11)
- Low head pressure, low suction pressure, and a lack of cooling are all possible indicators that a system has a refrigerant leak. Methods for locating leaks vary with the refrigerant used. However, all methods require the application of pressure to the system. (Chapter 11)
- Epoxy resin is a thermosetting polymer that forms a strong adhesive. It may be used to repair cracks and leaks in evaporators and joints. (Chapter 11)
- Moisture and other substances often enter a refrigeration system during service work. This happens after refrigerant has been recovered and the system is opened to atmosphere. To remove this unwanted moisture, a technician must evacuate the system. (Chapter 11)
- The amount of refrigerant that should be charged into a system is specified by weight. In order to charge a system by weight, an HVACR technician must first determine the proper charge for the system. Often this information can be found on a label or tag. (Chapter 11)

Introduction

Before servicing refrigeration units, a technician should check all service information and system specifications. System specifications are usually located on an identification plate mounted on the compressor. This information will help you determine the type of refrigerant, refrigerant charge, compressor hp, compressor speed, running amperes, voltage, phase, and other data for the unit. **Figure 26-1** shows the system specifications of a typical domestic refrigerator-freezer.

The servicing of refrigerators with hermetic systems can be divided into three areas:

- External servicing.
- Internal servicing.
- Overhaul.

Video

- Hermetic Compressor Replacement

Service Data Sheet				
	65°F (18°C) Ambient		90°F (32°C) Ambient	
	Variable Speed	Standard	Variable Speed	Standard
Operating Time	74% to 84%	32% to 40%	100%	55% to 65%
Freezer Temperature	–2°F to 2°F (–19°C to –17°C)	0°F to 4°F (–18°C to –16°C)	–1°F to 3°F (–18°C to –16°C)	–1°F to 3°F (–18°C to –16°C)
Refrigerator Temperature	34°F to 39°F (1°C to 4°C)	34°F to 39°F (1°C to 4°C)	34°F to 39°F (1°C to 4°C)	34°F to 39°F (1°C to 4°C)
Low-Side Pressure (Cut-In)	5 to 12 psig (43 to 83 kPa)	5 to 12 psig (43 to 83 kPa)	N/A	5 to 12 psig (43 to 83 kPa)
Low-Side Pressure (Cut-Out)	–2 to 2 psig (–14 to 14 kPa)	–2 to 2 psig (–14 to 14 kPa)	–2 to 2 psig (–14 to 14 kPa)	–2 to 2 psig (–14 to 14 kPa)
High-Side Pressure	90 to 105 psig (621 to 724 kPa)	90 to 115 psig (621 to 793 kPa)	120 to 135 psig (827 to 931 kPa)	130 to 155 psig (896 to 1069 kPa)
Wattage (Last 1/3 of Cycle)	60 to 85 W	120 to 150 W	65 to 80 W	130 to 180 W
Amps (Running)	0.7 to 1.1 A	1.0 to 1.4 A	0.9 to 1.3 A	1.1 to 1.5 A
Base Voltage	115 Vac (127 Vac max)	115 Vac (127 Vac max)	115 Vac (127 Vac max)	115 Vac (127 Vac max)

Goodheart-Willcox Publisher

Figure 26-1. Chart showing operating data for a side-by-side, automatic defrost refrigerator using R-134a. The data represents no-load operation, with no door openings and with thermostatic controls set at their midpoint.

26.1 External Service Operations

Some of the more common external service operations include replacing cabinet hardware, cleaning the unit, finding and eliminating noises, and repairing ice makers. The fixes for many of these problems were covered in Chapter 25, *Installation and Troubleshooting of Domestic Refrigerators and Freezers*.

In addition, there are many electrical components and circuits that can be checked and repaired. These include the power-in circuit, thermostat, interior light circuit, fan motors and circuit, damper controls, compressor motor circuit, and defrost circuit.

26.1.1 Cleaning the Condenser and Compressor

A compression refrigeration system is basically a heat-transfer system. Air must circulate around the compressor and through the condenser to carry away the heat. Dirt and lint buildup on the condenser and compressor act as insulation, decreasing the amount of heat transferred. Therefore, the condenser and compressor must be kept as clean as possible. To make the refrigerator or freezer operate efficiently and to extend the life of the compressor, the condenser and compressor should be completely cleaned about every three months.

The compressor and condenser should be cleaned using a small vacuum cleaner. A special vacuum cleaner nozzle with a brush attachment is ideal for cleaning the condenser and compressor. The vacuum cleaner keeps lint from circulating and settling on the floor. It is also quicker and more thorough than hand brushes or cleaning cloths. If a brush or cleaning cloth is used, place a paper or cloth underneath the unit to catch loosened dirt and lint.

Units that use condenser fans should be disconnected from electrical power before the compressor or condenser are cleaned. Sometimes it is necessary to remove panels from the cabinet in order to access the compressor or condenser.

26.1.2 Using Pressurized Air for Cleaning

In the shop, pressurized air, nitrogen, or carbon dioxide is often used to blow lint and other dirt from between the fins or coils. Areas that otherwise would be difficult to reach can be cleaned with this method. This is also good for components that could be easily damaged with physical cleaning or during transport, such as natural convection condensers.

Copyright Goodheart-Willcox Co., Inc.

Safety Note

Cleaning with Compressed Air or Gas

Always wear goggles and a dust mask when using compressed air to remove dust and dirt. The goggles can prevent eye injuries ranging from an annoying speck of dust in the eye to a scratched cornea. The dust mask will keep irritating and damaging materials from entering your nose, mouth, throat, and lungs.

26.2 Internal Service Operations

Internal service operations include removing any part of the hermetic system, determining whether there is air in the system, checking for a lack of refrigerant, and checking for a clogged filter-drier or capillary tube. These operations require gauges and servicing devices, including refrigerant recovery machines, vacuum pumps, and refrigerant cylinders. A sealed system should not be opened unless absolutely necessary.

Before attempting any field service operations that require opening the system, begin by thoroughly cleaning all connections, valve fittings, and accessible surfaces. Next, install a valve adapter or piercing valve as needed. Attach a gauge manifold and connect the refrigerant recovery equipment. Recover the unit's refrigerant charge using the proper procedure prior to opening the system.

The service operations most commonly performed are locating and repairing a refrigerant leak, adding oil to the system, evacuating a system, charging and recovering refrigerant, cleaning or replacing a capillary tube, replacing a compressor, replacing an evaporator or condenser, replacing a filter-drier on the high side, and installing a filter-drier on the low side.

Usually, you will be required to perform these tasks in the field. However, they can also be performed in the shop. Shops have better facilities to do the job. Study this chapter carefully before performing any service operation.

Preparing a Domestic Refrigerator or Freezer for Internal Service

It is sometimes necessary to replace parts of a system. The internal parts most commonly in need of replacement are the compressor, condenser, capillary tube, evaporator, accumulator, and filter-drier. The system should be prepared as follows:

1. Unplug the refrigerator or freezer from the electrical outlet.
2. Carefully clean all surfaces. It is good to clean every component in the system. This will reduce the chance of dirt and other contamination entering the system.
3. Install a service valve and gauge manifold.
4. Use a recovery/recycling machine to remove and recover the refrigerant. The system must be purged in accordance with Environmental Protection Agency (EPA) regulations.
5. Cut the tubing and remove the part to be replaced. If the part will not be immediately replaced, plug the ends of the tubing until ready to replace the part. Remember to use a low-pressure flowing nitrogen purge while brazing to prevent harmful oxidation from forming within the tubing.

26.2.1 Replacing a Hermetic Compressor

Domestic refrigerators use hermetically sealed rotary or reciprocating compressors in fractional horsepower sizes ranging from 1/10 hp to 1/3 hp. The compressor in a domestic refrigerator is located at the bottom of the cabinet. The lines that connect the compressor to the refrigerant piping may be copper or steel.

Compressors can have a suction line, discharge line, process tube, and two oil cooler lines. Therefore, it may be difficult to determine which lines connect to which tube when replacing a compressor. Try following the lines back to see where else they connect into the system. A line running straight to the condenser is most likely the discharge line. A manufacturer's diagram will illustrate the correct connections, **Figure 26-2**.

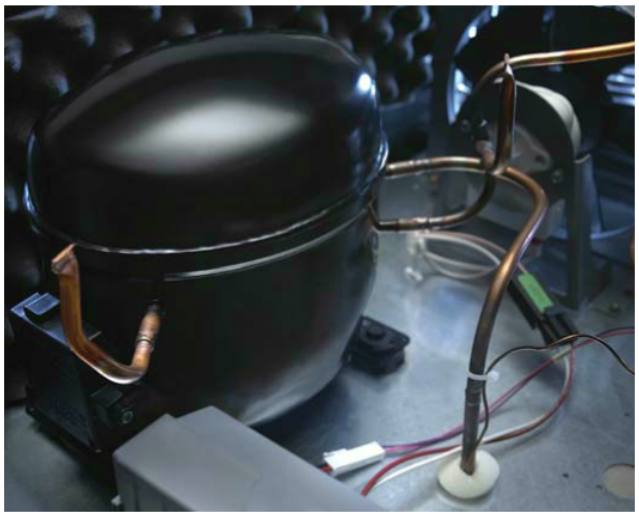

Maytag Corporation

Figure 26-2. A hermetic compressor in a refrigerator-freezer.

Copyright Goodheart-Willcox Co., Inc.

Removing a Hermetic Compressor

Follow this procedure to remove a hermetic compressor from a refrigerator-freezer.

1. Unplug the refrigerator or freezer from the electrical outlet.
2. Install piercing valves to the suction line and discharge lines if necessary.
3. Install a gauge manifold.
4. Recover the refrigerant charge.
5. Disconnect all electrical connections to the compressor.
6. Disconnect the suction and discharge lines using one of following techniques. Wear goggles when performing this step.

   A—Clean both the suction and discharge tubing on straight sections near the compressor. Use a tube cutter to cut the lines. *Plug the lines immediately.*

   B—Clean the tubing or fittings at the compressor. Put brazing flux on the connection. Heat the joint and pull the tubing out of the fittings. *Plug the openings immediately.*
7. If the compressor has oil-cooler lines, they must be pinched, then cut with a tubing cutter. The compressor tubing openings should be sealed.
8. Remove the compressor.

The unit is now ready to have a replacement compressor installed.

Hermetic Compressor Burnout

When internal problems occur, such as shorted windings, locked rotor, or bearing seizure, a compressor seizes up. These failures can result in the melting or burning of internal components, referred to as a ***burnout***. If a compressor suffers an internal failure, the burnt electrical wiring mixes with the refrigerant and oil to create a highly acidic, tar-like substance. A strong pungent refrigerant odor may be present when a piercing valve is opened slightly. This is a certain indication of a burnout.

The causes of compressor burnout have been widely studied. Moisture, dirt, and air in the system are possible causes. Another cause may be too much current flowing through the compressor motor, as a result of inaccurate or malfunctioning safety devices in the electrical circuit. Additional reasons may be a stuck compressor, low voltage, or a lack of refrigerant (poor motor cooling).

Preventing Motor Burnout

High head pressure, or excessive pressure at the compressor's outlet, is one of the most common reasons for motor burnout. The most frequent cause of high head pressure is a clogged condenser. High pressure creates very high temperatures as the vapor passes the compressor discharge valves. These high temperatures increase chemical action, leading to increased corrosion in the system. If the temperature at the discharge line to the condenser reaches 350°F (177°C), the oil in the system breaks down and forms carbon and sludge.

It is very important that the condenser be large enough for the system. It must be clean and the air must flow over it efficiently and effectively. To ensure good airflow, fans, fan motors, ducts, and air-in and air-out passages must all be free of dust buildup and in good condition.

If the unit is cycling too much or getting hot, the head pressure of the unit should be checked. If the head pressure is found to be excessively high, take all necessary steps to bring this pressure down. Blow off the condenser coil with compressed air. Use a long bristle brush and a vacuum cleaner to remove any stuck-on dirt from the coil. Be careful not to damage the condenser tubing. Check the air-in and air-out passages. They must be in good condition. Recover and recharge the system with the proper amount of refrigerant and oil, and then recheck the head pressure to ensure the system is operating properly.

Safety Note

Cleaning the Condenser

Wear safety goggles and a dust mask when cleaning the condenser coil.

Cleanup after Motor Burnout

When a motor begins to burn out, it overheats. This overheating causes the refrigerant to break down. If moisture is present, overheating can cause the formation of hydrochloric and hydrofluoric acids. The acid causes the insulation on the motor windings to deteriorate, which can increase the motor temperature. Eventually, the motor windings will short-circuit and the motor will burn out.

If a system's compressor burns out, it must be replaced. The refrigerant controls, including metering devices and solenoid valves, may also need to be replaced. Always install a new filter-drier in any system that has suffered a burnout. After replacing the components, flush the system with nitrogen or use a

Copyright Goodheart-Willcox Co., Inc.

refrigerant recovery machine equipped with a flush mode to flush refrigerant through the system.

Safety Note

Acidic Oil

Do not touch the oil from a burned-out compressor. It will cause a severe acid burn! Wear goggles and rubber gloves when working with acidic oil.

It is important to check the oil in a system even if it is assumed that the burnout is mild. Any acid in the refrigerant system can destroy components. An ***acid test kit***, like the one shown in **Figure 26-3**, is used to test for acidic oil.

To test the oil, a small sample of the refrigerant oil is taken out of the system and mixed with a predetermined amount of each test chemical. The acidity of the oil is then measured against a color-coded chart included in the kit. If the oil is too acidic, the compressor should be removed and the system flushed prior to installation of a new compressor.

Pro Tip

Cutting Oil Cooler Lines

If oil cooler lines must be cut, do not allow the oil to run onto the floor. Trap it in glass containers.

The burnout can be mild or severe. If the burnout is severe, the oil will be black and acidic with a pungent, very unpleasant odor. If the burnout was mild, the oil will be clear but pungent and mildly acidic. Many acid test kits are available for determining the amount of contamination. If oil is clean and odor-free, there is no burnout. The trouble is mechanical.

Courtesy of Sporlan Division—Parker Hannifin Corporation

Figure 26-3. Refrigerant oil test kit. The kit is used to test the acidity of refrigerant oil.

26.2.2 Installing a Hermetic Compressor

A bad compressor should be replaced with a compressor having the same specifications. The replacement compressor must have the same pumping capacity as the compressor being replaced. It must also produce the same low-side pressure (low-, medium-, or high-temperature rated).

Installing a Replacement Compressor

The following is the recommended procedure for installing a replacement compressor.

1. Recover the refrigerant and disconnect and remove the bad compressor.
2. Carefully clean about 2″ (50 mm) at the ends of the suction, discharge, and oil lines of the system. Be sure to remove all oxidation.
3. Use emery cloth or 200-grit sandpaper to remove paint and oxidation from the ends of the suction, discharge, and oil stub tubes on the replacement compressor. The last 2″ (50 mm) of each of the stub tubes should be cleaned down to shiny copper tubing.
4. Attach a piercing valve on the discharge line if necessary. Braze an extension tube and access port to the process tube on the replacement compressor. Connect the gauge manifold.

8

Caution

Isolate the Brazing Area

When brazing, keep the heat away from other brazed joints. Protect the other joints in the line by draping wet cloths over them or by covering them in special heat-absorbing compounds. Position metal sheets around the work area to shield the cabinet, wires, and plastic parts from the flame.

5. Connect the suction, discharge, and oil lines to the corresponding stub tubes on the replacement compressor. Braze the connections. See **Figure 26-4**.

Caution

Tubing Size Mismatch

If the compressor stub tubes are smaller in diameter than the suction and discharge lines before they are swaged, the replacement compressor may be too small. Ensure that the replacement compressor has the correct capacity before proceeding. If you are absolutely certain the compressor capacity is sufficient, use reduction fittings to connect the compressor to the lines.

Copyright Goodheart-Willcox Co., Inc.

6. If the system is equipped with a filter-drier, remove and replace it. If the system is not equipped with a filter-drier, install a new filter-drier of the proper capacity. If the refrigeration system is equipped with a capillary tube, the filter-drier should be installed at the capillary tube inlet.
7. In some instances, replacement compressors burn out soon after they are installed. Most repeat burnouts are due to the system containing moisture or not being clean enough. For this reason, it is good practice to install a second filter-drier in the suction line between the evaporator and compressor to reduce the risk of a repeat burnout.
8. Pressurize the system with nitrogen and a trace amount of refrigerant to (about 25 psig [175 kPa]). Check for leaks. Vent the charge to atmosphere and prepare to apply a vacuum to the system.
9. Using a gauge manifold or a T-fitting in the hoses, connect a vacuum gauge between the vacuum pump and the system. Draw as high a vacuum as possible. Turn off vacuum pump and close the vacuum pump's inlet valve to isolate it from the system. Hold this high vacuum for at least an hour, watching the vacuum gauge. If the vacuum measurement does not hold constant, there is a leak in the system.
10. Charge the system with a small amount of the proper refrigerant. Add just enough refrigerant to bring the pressure to atmospheric pressure or very slightly above.
11. Replace the unit's relays and capacitors and reinstall all electrical connections to the compressor. Plug the unit in and allow it to run for a few seconds to pressurize the system.
12. Charge the system with the correct amount of refrigerant and leak check again.
13. Close all gauge manifold valves and operate the system through several cycles.
14. Check the system's superheat and adjust the refrigerant charge if necessary.
15. Remove the gauge manifold and recovery unit. Carefully seal all openings into the system, depending on the gauge manifold connections used.
16. It is good practice to place a data logger in the refrigerator cabinet. This enables the operation to be checked continuously for at least 24 hours.

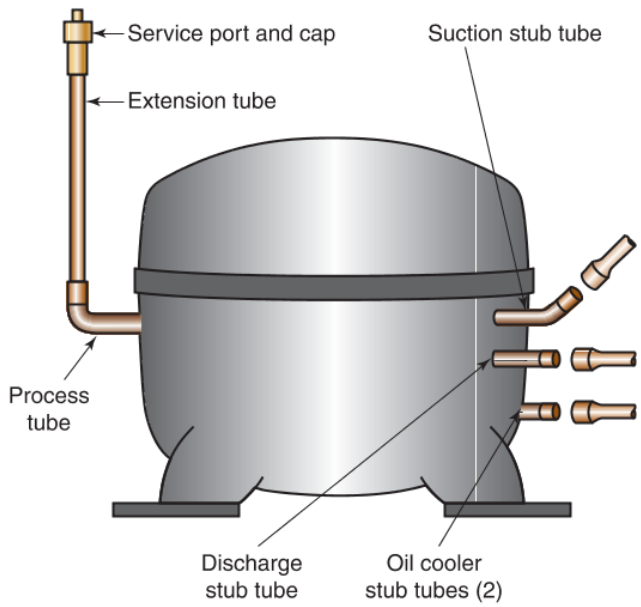

Goodheart-Willcox Publisher

Figure 26-4. If necessary, an expander or swaging tool can be used to increase the diameter of the suction line and discharge lines, allowing the stub tubes from the compressor to telescope into them. Apply a thin coating of flux to the outside of the compressor stub tubes before inserting them into the system lines. Wipe excess flux from the joints and then braze the connections.

26.2.3 Repairing Condenser Leaks

Condenser troubles are usually caused by leaks or by lint and dirt accumulation on the outside. It may be possible to repair leaks without bringing the unit into the shop. Most condensers are copper and leaks in them can be plugged using a high-pressure and high-temperature brazing alloy. The technician must install piercing valves, recover refrigerant using the proper equipment, repair the leak, test the repair, evacuate the system, and then recharge the system. If the leak is not repairable, the condenser must be replaced.

26.2.4 Repairing Evaporators

Evaporators are made of either stainless steel or aluminum. For stainless steel, repairs are made by brazing the evaporator tubing using an oxyfuel torch or by welding the tubing using the gas tungsten arc welding (GTAW) process. For aluminum evaporators, repairs can be made by soldering, brazing, or welding, but the use of epoxy is the most common method of evaporator repair.

Copyright Goodheart-Willcox Co., Inc.

Pro Tip

Welding Terminology

In the field, the gas tungsten arc welding (GTAW) process is often referred to as the tungsten inert gas (TIG) process. Be aware that both terms describe the same welding process.

Repairing a Stainless Steel Evaporator

The following is the recommended procedure for repairing a stainless steel evaporator:

1. Locate the leak.
2. Remove the refrigerant using a recovery/recycling machine.
3. Clean the metal around the leak by sanding with emery cloth or sandpaper of 200 grit or higher.
4. Braze or weld the leak while purging the evaporator with nitrogen at a very low pressure.
5. Polish the weld or clean the brazed joint.
6. Test for leaks.

Repairing an Aluminum Evaporator

The following is the recommended procedure for repairing an aluminum evaporator:

1. Locate the leak.
2. Acquire an epoxy repair kit. An ***epoxy repair kit*** contains all the materials needed to prepare and patch a small hole in an aluminum evaporator, **Figure 26-5**.
3. Remove the refrigerant using a recovery/recycling machine.
4. Clean around the leak. The surface oxide is hard and must be removed. Sand the area around the leak, file down any sharp edges, and then clean the area with epoxy cleaner. Begin the repair immediately after cleaning because the oxide surface will reform quickly. If the leak is a large hole, use a metal plug to fill most of the opening.
5. Mix the specified ratio of epoxy resin and hardener.
6. Apply the epoxy with a mixing spatula. (Be sure there is no positive pressure in the system. The system must be open to atmosphere at some other opening.)
7. Allow the epoxy to harden for at least an hour.
8. Sand the patch to a smooth finish.
9. Test for leaks using a soap solution or electronic leak detector.

If the system still leaks at the repaired joint, remove the epoxy by filing and/or grinding. Then, install a new patch. Aluminum foil can be used with the epoxy to strengthen the joint. It can also improve the appearance of the repair. Another method of repair is to heat the tubing and apply a paste mix (or stick) of special epoxies and resins.

Avoid brazing aluminum tubing, as it overheats too easily. Too much of the tubing will be annealed (softened), weakening the tubing walls. Aluminum tubing is usually 3003 alloy. However, 5005 and 1100 alloys are also used. If a brazed repair is unavoidable, aluminum solder, containing 92% to 100% zinc, is used. The melting temperatures are 700°F to 800°F (370°C to 430°C). Do not use a flux. Aluminum can also be welded using the gas tungsten arc welding (GTAW) process.

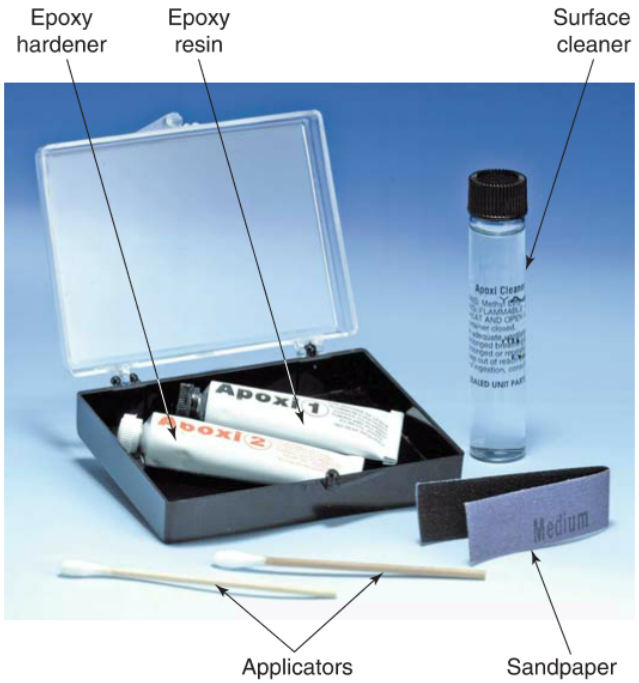

Sealed Unit Parts Co., Inc.

Figure 26-5. This epoxy repair kit includes sandpaper, surface cleaner, resin and hardener.

Copyright Goodheart-Willcox Co., Inc.

Ritchie Engineering Co., Inc. – YELLOW JACKET Products Division

Figure 26-6. Capillary tube cutter.

26.2.5 Servicing Capillary Tubes

To prepare for replacing a capillary tube in a domestic refrigerator or freezer, follow the procedure entitled *Preparing a Domestic Refrigerator or Freezer for Internal Service* presented earlier in this chapter. However, instead of cutting the tubing as directed in step 5, heat the brazed joint at the filter-drier to loosen the bond, and then pull and twist the capillary tube to separate it from the filter-drier. Repeat the process at the other end of the capillary tube to separate it from the evaporator. Clean the separated joints with emery cloth and a file.

It is sometimes possible to repair a capillary tube by cleaning and flushing it with a hydraulic capillary tube cleaner. However, in most cases, capillary tubes that are suspected of being clogged are simply replaced. The new capillary tube must have the same inside diameter (ID) and the same length as the one removed. These traits determine the pressure drop that occurs through the capillary tube and are critical to the proper operation of the system.

There are universal replacement capillary tubes on the market that can be used if necessary. Calibrated wires of different sizes can be inserted into these capillary tubes to adjust the amount of restriction provided by the tube.

If wax caused the tube to become clogged, remove the oil from the system. Replace it with fresh, clean, wax-free oil. When servicing frozen foods equipment, use only the best low-wax oil.

Pro Tip

Cutting Capillary Tubing

Capillary tubing should be cut by filing a notch around it and then breaking the tubing using small back-and-forth motions. Cutting the tubing with a PVC or copper tubing cutter would change the inside diameter of the tubing too much. Specially made capillary tube cutters are also available, **Figure 26-6**.

Caution

Liquid Drying Agents

Never use a liquid drying agent (such as methanol) to stop moisture from freezing at the refrigerant control. These "antifreeze" substances do not remove the moisture. They merely keep it in circulation. In many cases, they can damage the motor insulation. Never use a liquid drying agent in a unit equipped with a ***solid desiccant*** (drying chemical in solid form). The liquid drying agent will release any moisture already trapped in the drier by the solid desiccant.

26.2.6 Servicing Filter-Driers

A filter-drier should be replaced any time the refrigeration system is opened. A new filter-drier may also be installed to remove moisture from the system. Filter-driers trap debris and moisture to keep the rest of the refrigeration system clean and dry inside. A typical combination filter-drier is shown in **Figure 26-7**.

A solid moisture adsorption material will usually do a satisfactory job. Silica gel, alumina gel, and synthetic silicates are excellent at adsorbing moisture. Silica gel in bead form also provides good results.

As noted earlier, liquid drying agents should never be used in a system equipped with a solid desiccant, and a solid-desiccant drier should not be put in a system that is already using a liquid drying agent. To avoid this danger, all systems should be labeled to indicate which type of drying agent is used. The moisture adsorbing capabilities of several solid desiccants are shown in **Figure 26-8**.

Figure 26-9 lists the recommended volume of drying agents according to horsepower of the system's compressor. All driers are sealed by the manufacturer. The sealing caps should not be removed from the filter-drier until just before installation.

Driers adsorb water faster at lower temperatures. If at all possible, the drier should be installed just ahead of the refrigerant control. If the filter-drier accidentally becomes heated, the moisture it has adsorbed may be driven out. The moisture will recirculate with the refrigerant. Locating the filter-drier just before the refrigerant control has the following advantages:

- It is likely that both the filter-drier and refrigerant control will become heated at the same time. This reduces the chance that ice will form in the refrigerant control.
- The filter-drier is kept far away from the heated tubing of the condenser.

The body of a filter-drier will have an arrow stamped or cast into it. This arrow indicates the direction in which the refrigerant should flow. Be sure the

Copyright Goodheart-Willcox Co., Inc.

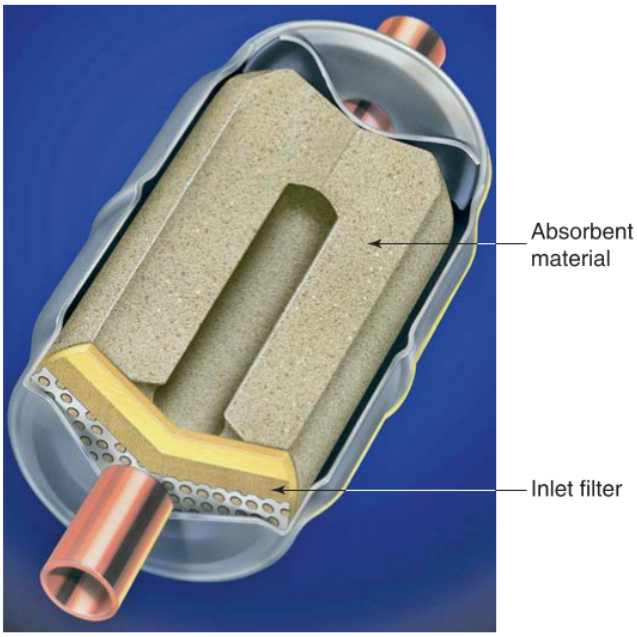

Courtesy of Sporlan Division—Parker Hannifin Corporation

Figure 26-7. Combination filter-drier. Note the use of an inlet filter and adsorbent material.

Moisture Adsorbing Capabilities of Desiccants		
Desiccant (Drying Chemical)	**Mesh**	**Adsorption Capacity (Percent Weight of Desiccant)**
Silica gel	8–20	16
Activated alumina	8–10	12
Synthetic silicates	8–20	16

Goodheart-Willcox Publisher

Figure 26-8. Moisture adsorbing capabilities of various desiccants. Some driers use just one of the desiccants listed and others use mixtures of these chemicals.

Filter-Drier Sizes—Domestic Refrigerator-Freezers	
Filter-Drier Size in Cubic Inches	**Compressor Size in Horsepower**
2	1/8
3	1/6 to 1/4
6	1/4 to 1/2
9	1/2 to 3/4

Goodheart-Willcox Publisher

Figure 26-9. The drier capacities (in cubic inches) recommended for systems with various horsepower ratings.

filter-drier is installed properly so that the refrigerant flow matches the direction of the arrow. Filter-driers may be installed with flared or brazed connections.

Whenever a system is opened, a new filter-drier must always be installed in the liquid line. Many service technicians install two filter-driers on a system after repairing it. One is placed on the high side just before the refrigerant control. Another is placed on the low side, between the evaporator and compressor. Two filter-driers improve the chance of removing all moisture or contaminants that may have entered the system during servicing.

Replacing a Filter-Drier

The following are the basic steps in replacing a filter-drier:

1. Connect a gauge manifold.
2. Recover the refrigerant.
3. Dry and clean the new filter-drier connections.
4. Disconnect the old filter-drier from the system. If done using brazing, use low-pressure flowing nitrogen through the inside of the joints.
5. Install the new filter-drier. The new filter-drier may be connected by brazing the joints or by tightening flare connectors. When brazing, use low-pressure flowing nitrogen through the inside of the joints.
6. Test for leaks.
7. Evacuate the system.
8. Charge the system.
9. Operate the system while warming the refrigerant control enough to melt any ice that may form in it. The filter-drier will adsorb this moisture as it circulates.

8

26.2.7 Evacuating and Charging a Hermetic System

After any internal refrigeration system component in a domestic refrigerator or freezer has been replaced, the system must be evacuated and recharged before being returned to service. A small hermetic system is evacuated and charged in the same way as other refrigeration systems. Basic evacuation and charging techniques were presented in Chapter 11, *Working with Refrigerants*.

The biggest difference in working with small hermetic systems is that the refrigerant and oil charge is much smaller than it is in larger systems. Most small

Copyright Goodheart-Willcox Co., Inc.

hermetic systems use a capillary tube as a metering device. This allows system pressures to equalize quickly during the Off cycle, which makes evacuating and charging much faster than on larger TXV systems.

Small hermetic capillary tube systems are very sensitive to refrigerant charge amount, so proper charging is critical to system operation. Always check the manufacturer's nameplate for correct amount of refrigerant charge. Also, be sure to record the amount of oil removed from a system to ensure that the same amount of oil is added during recharging.

If testing indicates a lack of refrigerant, there is a system leak. The leak must be repaired before refrigerant is added. The following are signs that a hermetic system is low on refrigerant:

- A partially frosted evaporator.
- Low head pressure.
- Low suction pressure.
- A visible or audible leak.
- Frequent cycling.

Charging with a Digital Scale

Figure 26-10 shows a digital charging scale. A digital charging scale allows a precise amount of refrigerant to be charged into a system. After evacuating the system, hook up a refrigerant cylinder using quick-connect fittings to prevent or minimize refrigerant escaping to the atmosphere. Open the cylinder valve, gauge manifold valve, and piercing valve to begin vapor charging the system, **Figure 26-11**.

When a digital scale indicates the proper charge has been added, close the cylinder valve, gauge manifold valve, and piercing valve. Pinch off the process tube between the compressor and piercing valve. Remove the piercing valve, trim and crimp the process tube, and braze the end. See Chapter 11, *Working with Refrigerants*, for additional information on the use of a digital charging scale for system charging and recovery.

Charging by Observing Frost Back

It is always best to recover the refrigerant from a system, evacuate the system, and then recharge the system with the exact amount of refrigerant specified by the manufacturer. However, in cases where the recommended refrigerant amount is unknown, it may be necessary to charge the unit by observing frost back on the evaporator.

The refrigerant cylinder and gauge manifold should be connected as shown in **Figure 26-12**. Start the unit. Open the piercing valve, gauge manifold valve, and refrigerant cylinder valve and watch the low-side pressure gauge. The pressure must stay within a range

Mastercool Inc.

Figure 26-10. Digital charging scale. A precise quantity of charge is entered into the scale controller. When the proper charge is reached, the charging solenoid module shuts off the flow of refrigerant from the cylinder.

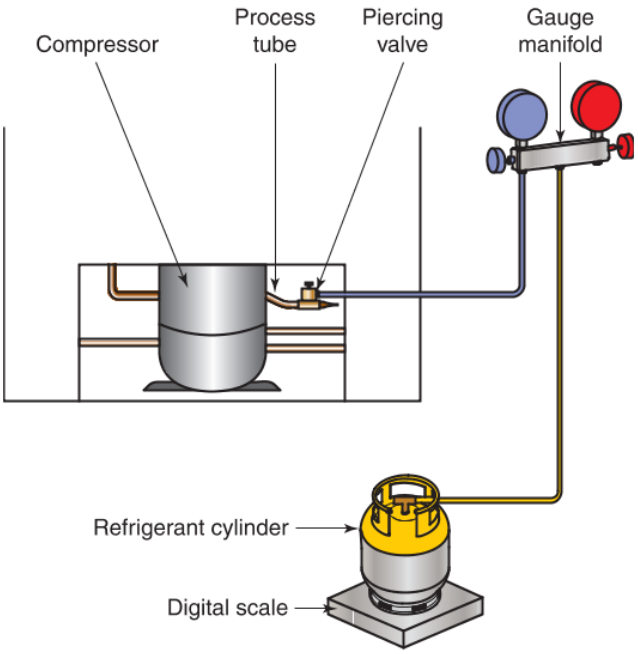

Goodheart-Willcox Publisher

Figure 26-11. A typical setup for recharging a domestic refrigerator-freezer using a digital refrigerant scale.

Copyright Goodheart-Willcox Co., Inc.

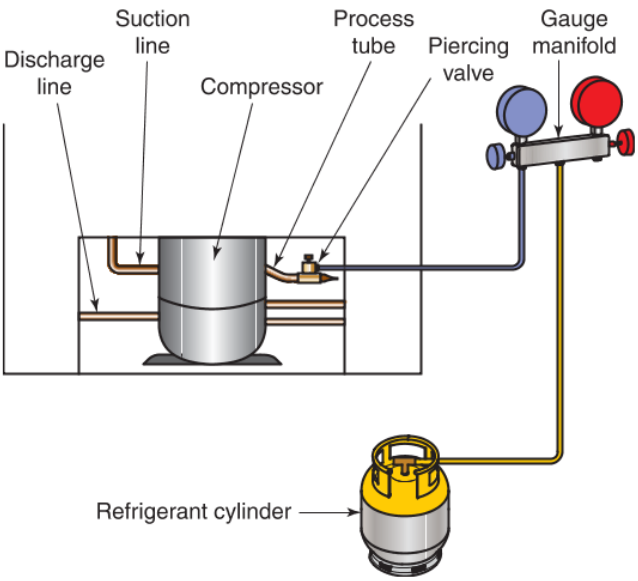

Goodheart-Willcox Publisher

Figure 26-12. Setup for charging a system while observing frost back.

of 5 psig to 25 psig (35 kPa to 175 kPa). This pressure is controlled by adjusting the refrigerant cylinder valve. Allow the refrigerant charge to enter the system for 3 to 5 minutes.

After the allotted time elapses, close the gauge manifold valve. Allow the unit to operate and check the frost line on the evaporator. If the frost line is inadequate, repeat the charging for short intervals, checking for frost after each interval. The frost line must not go beyond the accumulator in the suction line. If the frost line extends beyond the accumulator, recover a small amount of the refrigerant and then recheck the frost line.

When the proper amount of frost has been observed, close the refrigerant cylinder valve, valve adapter or piercing valve, and gauge manifold valve. After closing all valves, follow these steps:

1. If a piercing valve was installed on the suction line, leave it mounted for future service operations.
2. Check for leaks using a leak detector.

For a system that uses a separate process tube, follow these steps:

1. Pinch the process tube between the compressor and the valve with a pinch-off tool. See **Figure 26-13**.
2. Remove the valve. Crimp the tube end to flatten it. Remove the pinch-off tool. Braze the end of the tube closed and then check for leaks.

Adding Oil to the System

The correct amount of oil in a system is very important. Lack of oil will increase friction, cause noise, and shorten the life of the compressor. An overcharge will cause the compressor to pump excessive amounts of oil. This will reduce the compressor's refrigerant-pumping capacity. It will also subject the compressor valves to severe strain.

Refrigerant oils are available in several viscosities. *Viscosity* is a rating of a fluid's ability to flow at different temperatures. Be sure to follow the manufacturer's viscosity recommendations. On a service call, add oil only if there is a sign of oil leakage.

It is rarely necessary to add oil to a hermetic system. However, leaking refrigerant always carries some oil with it. This lost oil should be replaced. If the hermetic unit is completely equipped with service valves, oil may be added using a conventional method. That is, oil can be siphoned or poured in.

If the system has had a low-side leak, moisture and air may have entered. In this case, it is best to replace the refrigerant oil. Measure the amount of oil removed and replace it with the same amount of clean, dry oil. See Chapter 11, *Working with Refrigerants*. The unit should be charged in much the same way as when adding refrigerant to the system.

A hand pump can be used to put oil into a system. The charging lines must be purged to remove air, moisture, and dirt. A hand oil pump can build up pressures as high as 300 psig (2100 kPa). Oil can be forced into the system even when the system is under pressure.

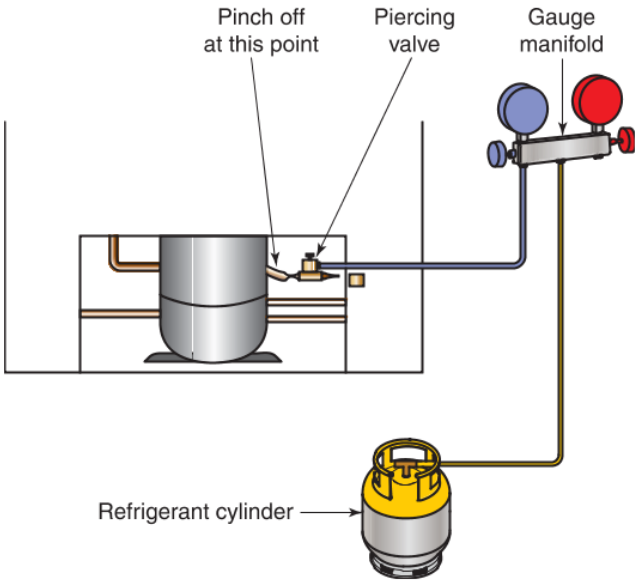

Goodheart-Willcox Publisher

Figure 26-13. After the piercing valve, refrigerant cylinder valve, and gauge manifold valve are closed, the process tube is pinched off. Note the pinch-off point.

Copyright Goodheart-Willcox Co., Inc.

The single-service-line technique shown in **Figure 26-14** can also be used to add oil. The correct amount of oil is put into the service cylinder. A small amount of refrigerant (the same type used in the system) is also put into the cylinder. This creates a pressure. The cylinder is inverted. Its cylinder valve is connected to the valve attachment by clean lines. Be sure the cylinder pressure is higher than the system pressure. Then, open the cylinder valve and valve attachment. The pressure in the cylinder will force oil into the refrigeration system.

26.2.8 Installing and Servicing Thermostats

When installing an electromechanical thermostat, be careful not to bend the sensing bulb's capillary tube back and forth. This small copper tube will work-harden and may break. Also, be sure that once the capillary tube is installed, it does not contact any part of the evaporator. If the tubing rubs against any part, it may wear through or work-harden at that spot

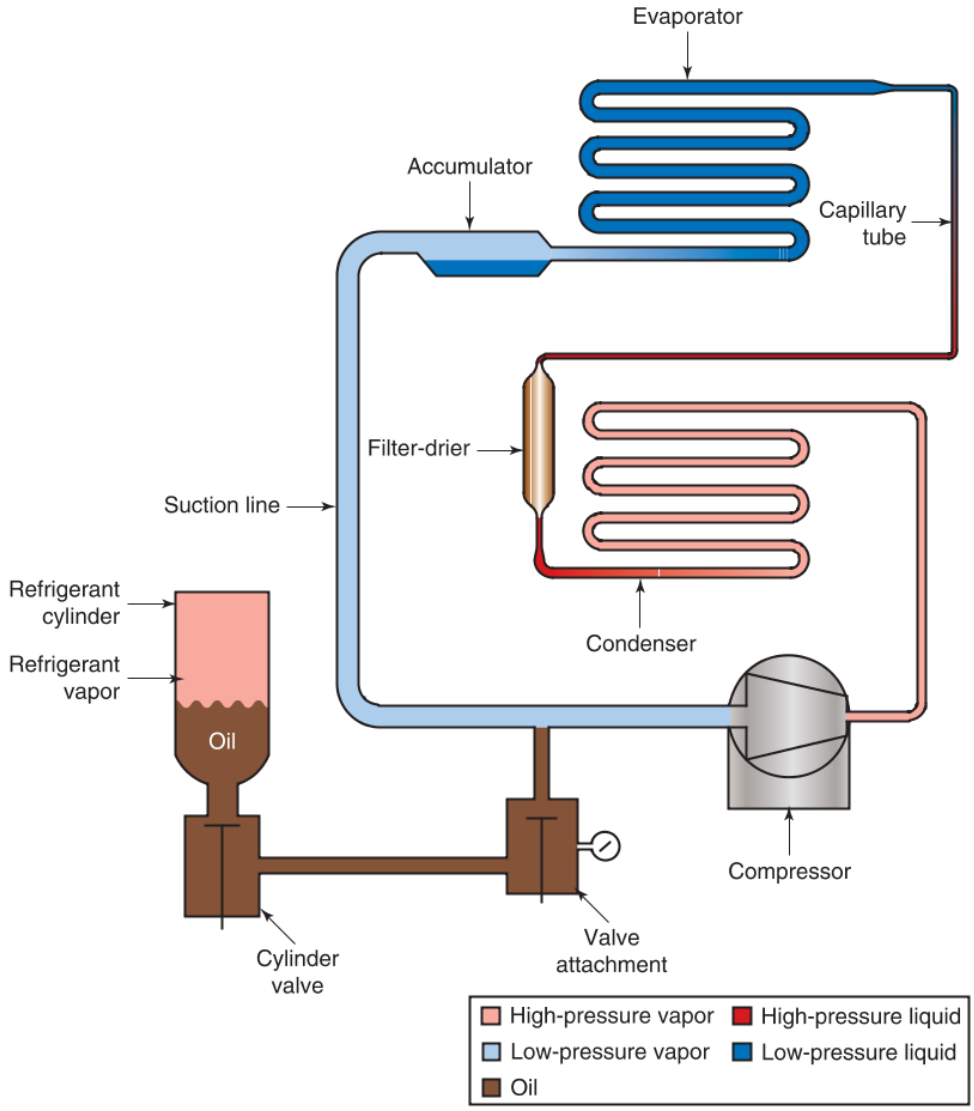

Goodheart-Willcox Publisher

Figure 26-14. Single-service-line technique for adding oil to a small hermetic system. First, place the correct amount of oil in a service cylinder, along with small amount of refrigerant to create pressure. Then turn the service cylinder upside down. Its pressure must be higher than low-side pressure, so that oil will enter the system.

Copyright Goodheart-Willcox Co., Inc.

and crack. If any of the capillary tube is coiled, tape the coil to prevent vibration.

Calibrating a Thermostat

A mixture of crushed ice and water can be used to calibrate a refrigerator's thermostat. With these materials, it is easy to determine the operation of the thermostat at 32°F (0°C), the temperature of melting ice. To check the operation of a thermostat, use a temperature data logger or temperature-recording thermometer like the one shown in **Figure 26-15**. Chart the temperature and time for the unit over a 24-hour period to determine how much it is cycling and at what temperatures it is cutting in and cutting out.

Testing a Thermostat

The following test uses solutions at specific temperatures to test the operation of the thermostat:

1. Connect an ohmmeter or continuity tester across the control contact terminals of the thermostat. Check the manufacturer's wiring diagram to ensure correct connections.
2. Check the temperature of the ice and water solution with a thermometer to ensure that it has stabilized at 32°F (0°C).
3. Place the thermostat control bulb in the ice and water mixture.
4. With the control bulb in the ice and water mixture, set the thermostat control to 32°F (0°C). The thermostat's contact points should open, in which case the ohmmeter will read either ∞ Ω or OL (infinite resistance).
5. After a few minutes, lift the control bulb from the mixture. As the control bulb warms, the points should again close, in which case the ohmmeter will read 0 Ω.
6. To check further, place the control bulb in a container of water that is at 45°F (7°C). Set the thermostat control to 45°F. At this setting, the points should be open, reading ∞ Ω or OL (infinite resistance) on an ohmmeter. The contact should begin to open at temperatures below 45.5°F or 46°F.
7. Lift the control bulb out of the water and let it warm up for a few minutes. The points should close, reading 0 Ω on an ohmmeter. If the points do not open and close properly, the thermostat should be replaced.

Sealed Unit Parts Co., Inc.

Figure 26-15. To check the operation of a freezer thermostat with a data logger, place the device inside the freezer cabinet and record the temperature over a 24-hour period. Then connect it to a mobile device to download the recorded values.

Freezer cabinet temperatures are usually in the 0°F to –20°F (–18°C to –29°C) range. Ice and water mixtures maintain a temperature of 32°F (0°C) and, therefore, cannot be used in setting these thermostats. Dry ice must be used to test a thermostat below freezing.

8

Adjusting Thermostat Controls

The four variables that affect thermostat operation are cut-in temperature, cut-out temperature, temperature range, and temperature differential. Cut-in temperature is the temperature at which the refrigeration system is activated. Cut-out temperature is the temperature at which the refrigeration system deactivates. The temperature range refers to the group of temperatures that fall between the cut-in and cut-out temperature. The temperature differential refers to the size of the temperature range.

For example, if a refrigerator turns on when the evaporator temperature rises to 45°F (7°C), the thermostat has a cut-in temperature of 45°F (7°C). If the same refrigerator turns off when the evaporator temperature reaches 32°F (0°C), it has a cut-out temperature of 32°F (0°C). The range of the refrigerator is 32°F to 45°F (0°C to 7°C), and the differential is 13°F (7°C).

As you can see, a change to either the cut-in temperature or cut-out temperature will also affect the range and differential. Manufacturers use different types of controls to adjust these four variables, so you must always refer to the manufacturer's instructions before adjusting the thermostat settings.

Copyright Goodheart-Willcox Co., Inc.

Some thermostats have simple cut-in and cut-out temperature adjusting screws. The cut-in and cut-out temperatures are set independently. This determines the range and differential. Then, to change the range without changing the differential, the cut-in adjusting screw and the cut-out adjusting screw must be turned the same number of times and in the same direction.

Other thermostats have one adjusting screw that adjusts just the cut-out temperature and another adjusting screw that adjusts both the cut-in and cut-out temperature settings at the same time. On these thermostats, the desired temperature differential can be set by turning the cut-out adjusting screw, and then the desired temperature range can be set without changing the differential by simply turning the cut-in adjusting screw. On this type of thermostat, the cut-out adjustment is referred to as a cut-out differential adjustment, and the cut-in adjustment is referred to as a cut-in range adjustment.

A variation of this design has an adjusting screw that sets the cut-in independently and a second adjusting screw that adjusts both the cut-out and cut-in temperature settings simultaneously. On this design, the cut-in adjustment is referred to as a cut-in differential adjustment and the cut-out adjustment is referred to as a cut-out range adjustment.

Still other thermostats have a single adjustment screw that is referred to as a dual differential adjustment. Turning the screw one direction will bring both the cut-in and cut-out settings closer together. Turning the screw the other direction will move both the cut-in and cut-out settings farther apart.

The adjustment provided for the owner is usually a limited range adjustment screw. However, some models allow the owner to adjust only the cut-out setting. This design ensures a safe cut-in temperature at all times.

Contact points may chatter as they open or close. Operate the thermostat to check for this condition. A likely cause of chatter is pitting or burning of contact points. If there are any visible indications of this, replace the entire thermostat.

26.2.9 Removing System Components from the Cabinet

Sometimes, mechanical or electrical trouble cannot be fixed easily during a service call. System components may need to be removed from the cabinet and sent to a shop for repair. When a complete overhaul of a hermetic system is necessary, it is usually done in a specialty repair shop. The condensing unit is disconnected from the refrigeration system and all electrical connections are either disconnected or cut. Any cut electrical connections will need to be spliced when the condensing unit is hooked back up to the system.

It is important to protect the refrigeration system while it is being moved. If shipped disassembled, cradles or crates should be used to hold the components. Wooden frames and C-clamps will hold the parts down. This will help keep them from being damaged in transit.

If an entire refrigerator-freezer is being transported in a truck back to a shop for service, it should be wrapped in a padded blanket for protection. Once the unit is in the shop, the procedure for removing the system components from the cabinet varies. Some evaporators are removed from the rear of the cabinet. Others are removed from the front (by way of the cabinet door). Refrigerator-freezers that have the evaporator removed from the rear are not difficult to dismantle. Skill and patience are required to remove an evaporator from the front of the cabinet.

The compressor and condenser are sometimes fastened to the rear of the cabinet by several mounting screws and bolts. Care should be taken not to damage the compressor or condenser as these fasteners are removed. Care should also be taken not to kink or buckle the refrigerant lines as they are removed from the compressor and condenser.

Refrigerant lines are mounted in the back of the refrigerator cabinet. They may also be hidden behind the breaker strip at the refrigerator doorjamb (frame). ***Breaker strips*** are plastic strips that connect the cabinet's outer shell to the liner. These breaker strips must be removed in order to remove the lines. Do this carefully, since the strips are brittle. If the strips are allowed to come up to room temperature, they will be more flexible. There are several methods used to fasten the breaker strips to the cabinet shell and the liner. Always follow the manufacturer's instructions for dismantling the system.

It is important to avoid pinching or buckling the refrigerant lines. Support the lines when handling them to prevent wear or breakage. Many liquid lines are soldered or brazed to fittings.

26.3 Storing or Discarding a Refrigerator-Freezer

When a refrigerator-freezer is going to be out of service for an extended period of time, certain precautions should be taken to prevent rusting and to remove odor. Begin by unplugging the unit's electrical power. Next, allow several hours for the unit to completely defrost.

Copyright Goodheart-Willcox Co., Inc.

If the unit is being discarded, its doors must be removed. It is also necessary to reclaim the refrigerant inside the system, following all certification procedures. After the refrigerant has been reclaimed, the unit should be labeled to indicate that the refrigerant has been removed by a certified technician. Chapter 11, *Working with Refrigerants*, describes recovery of refrigerant.

Code Alert

Preparing to Discard Refrigerator-Freezers

Federal law states that the door must be removed from an out-of-service refrigerator or freezer. This law resulted because children were accidentally suffocated while hiding or playing in an unused or carelessly discarded unit. When taking a refrigerator or freezer out of service, always remove the cabinet door.

Copyright Goodheart-Willcox Co., Inc.

Chapter Review

Summary

- The condenser and compressor of a domestic refrigerator must be kept clean in order for the unit to function properly. The condenser and compressor should be cleaned regularly using a brush, a small vacuum cleaner, or compressed air. Refrigerators or freezers that have condenser fans should be unplugged before the condenser and compressor are cleaned.
- The most common internal service procedures on a domestic refrigerator or freezer are replacement of a compressor, leak repair, replacement of a condenser or evaporator, replacement of a filter-drier, and replacement of a capillary tube. To prepare for any of these procedures, the tubing and joints around the component being serviced must be cleaned. Refrigerant must be recovered from the unit in accordance with EPA regulations, and the unit must be unplugged. The component can then be removed and replaced using the proper techniques.
- If a compressor needs to be replaced because of burnout, the cause of the original burnout must be identified and corrected before the system can be put back into service. Burnouts are usually caused by excessively high head pressure. High head pressure can result from a restriction in the system or by dust buildup on the condenser. After a burnout, all refrigerant controls should be thoroughly cleaned or replaced. The system should be flushed, and the refrigerant oil should be replaced if it is found to be acidic.
- After any internal component is replaced, the refrigeration system must be evacuated and recharged. A digital charging scale is used to charge the system with a specific amount of refrigerant. If the exact amount of the proper charge cannot be determined, the system can be vapor charged until the proper amount of evaporator frosting appears.
- Thermostat operation can be tested using a mixture of ice and water. Modern thermostats usually have two adjusting screws; however, these two screws have four possible functions: cut-in, cut-out, dual differential, and range. Refer to manufacturer literature before attempting any adjustments.
- Occasionally a problem is encountered that cannot be repaired in the field. In such cases, the entire refrigerator-freezer is sent to a shop for service. Care must be taken not to damage any of the components during removal and transport.
- To prepare a refrigerator or freezer for storage or disposal, the unit must be completely defrosted and dried out. The cabinet door must be removed to prevent children or animals from becoming accidentally trapped inside. The refrigerant inside the unit must be recovered in accordance with EPA regulations.

Review Questions

Answer the following questions using the information in this chapter.

1. A condenser and compressor should be completely cleaned _____.
   A. daily
   B. every three months
   C. once a year
   D. every four years
2. Which of the following can be used to clean a condenser coil?
   A. A vacuum cleaner with a brush attachment.
   B. A hand brush and cleaning cloth.
   C. Compressed air.
   D. All of the above.
3. Before a valve adapter or piercing valve is installed, _____.
   A. evacuate the system
   B. flush the system with the appropriate solvent
   C. thoroughly clean all connections, valve fittings, and accessible surfaces
   D. All of the above.
4. In a compressor burnout, _____ mixes with refrigerant and oil to form a pungent, acidic, tar-like substance.
   A. atmospheric pollutants
   B. burnt electrical wiring
   C. scorched desiccant
   D. All of the above.
5. If the refrigerant oil is found to be clear and odorless, the compressor _____.
   A. burnout was mild
   B. burnout was severe
   C. did not burn out
   D. was not exposed to moisture during the burnout

Copyright Goodheart-Willcox Co., Inc.

6. A filter-drier on the high side of a capillary tube system should be installed at the _____.
   A. capillary tube inlet
   B. capillary tube outlet
   C. condenser inlet
   D. condenser outlet
7. Which of the following is most likely to help prevent a repeat compressor burnout?
   A. Add a second accumulator just before the compressor inlet.
   B. Add a second filter-drier on the high side of the system.
   C. Add a second filter-drier on the low side of the system.
   D. Adjust the thermostat to increase the differential.
8. Using _____ to plug a leak is the most common method of repairing an aluminum evaporator.
   A. epoxy
   B. gas tungsten arc welding
   C. high-strength aluminum foil tape
   D. oxyacetylene brazing
9. The best method of cutting capillary tubing is by _____.
   A. burning through with an oxyacetylene torch
   B. making a notch around the tubing with a file and bending the tubing back and forth until it breaks
   C. using a copper tubing cutter
   D. using a hacksaw
10. Which of the following can be an indication that a system is low on refrigerant?
    A. A frosted suction line.
    B. High head pressure.
    C. Low suction pressure.
    D. All of the above.
11. The preferred method of charging a small domestic refrigeration system involves evacuating the system and then _____.
    A. pouring liquid refrigerant into the low side until the bottom half of the compressor crankcase is frosted
    B. using a digital scale to vapor charge a precise amount of refrigerant
    C. vapor charging the system while watching the frost back
    D. vapor charging according to the subcooling
12. Refrigerant oil should be removed and replaced _____.
    A. any time the system is accessed
    B. in the event of a low-side leak
    C. once a year
    D. All of the above.
13. Which of the following statements regarding a thermostat's temperature differential setting is true?
    A. If the thermostat has just cut-in and cut-out adjustment screws, the differential can be changed by turning a single screw.
    B. The temperature differential is determined by the cut-in and cut-out temperatures.
    C. On a thermostat with a dual differential adjustment, turning the adjustment screw one direction increases the differential and turning the screw the other direction decreases the differential.
    D. All of the above.
14. When removing a refrigeration system from its cabinet, breaker strips must be removed in order to remove the _____.
    A. compressor's electrical controls
    B. defrost controls
    C. refrigerant lines
    D. thermostat
15. On any refrigerator-freezer that is to be discarded, which two things must be properly removed and handled?
    A. Accumulator and filter-drier.
    B. Cabinet door and refrigerant.
    C. Compressor and breaker strips.
    D. Evaporator and condenser.

Copyright Goodheart-Willcox Co., Inc.

CHAPTER 27 Air Movement and Measurement

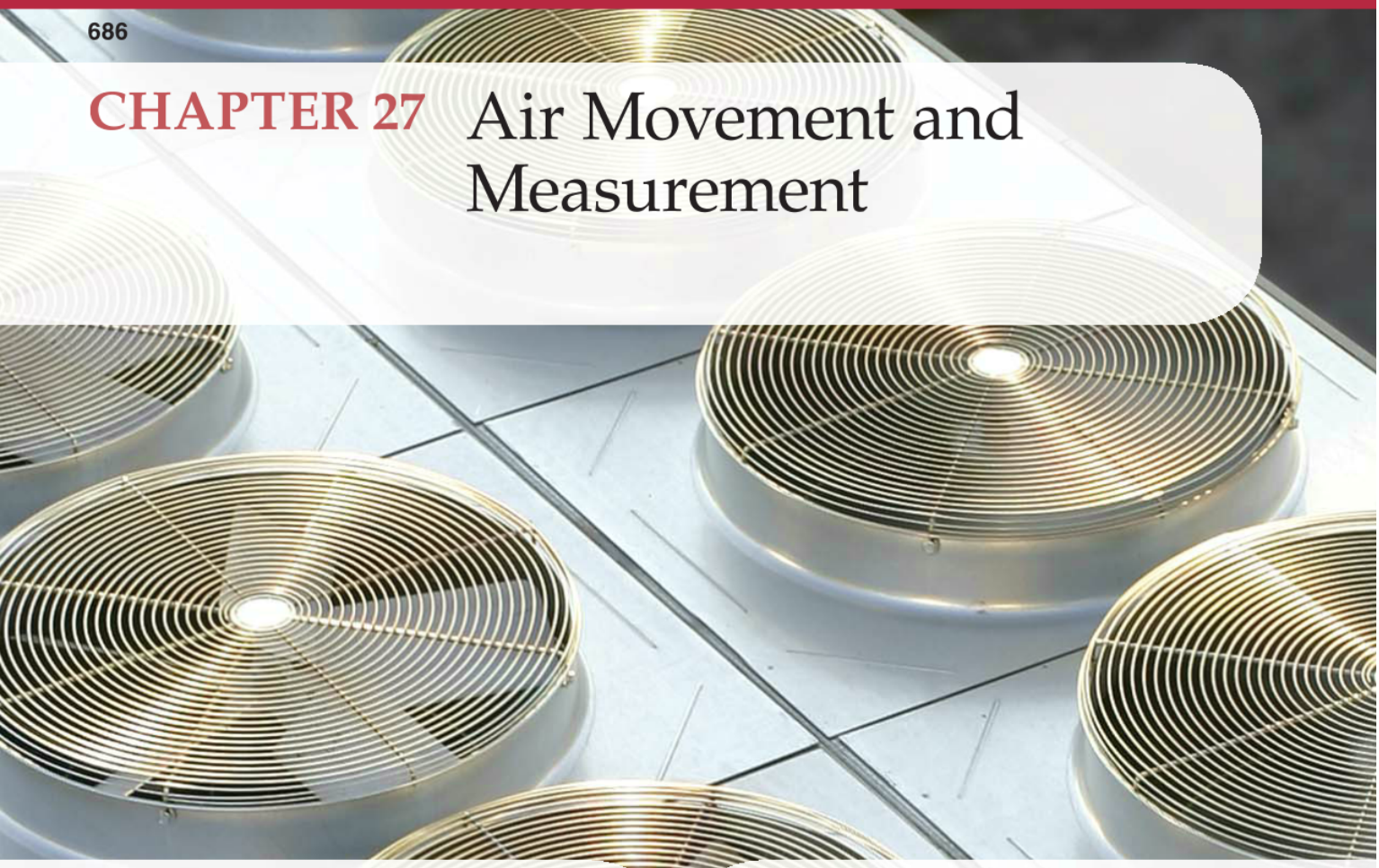

Chapter Outline

27.1 Climate
- 27.1.1 Equivalent Temperature
- 27.1.2 Definition of Air Conditioning

27.2 Atmosphere and Air
- 27.2.1 Physical Properties of Air
- 27.2.2 Humidity
- 27.2.3 Air Temperature
- 27.2.4 Psychrometric Properties of Air

27.3 Comfort Conditions
- 27.3.1 Effective Temperature
- 27.3.2 Temperature-Related Illnesses
- 27.3.3 Comfort-Health Index (CHI)

27.4 Air Movement
- 27.4.1 Wind
- 27.4.2 Air Velocity Measurement
- 27.4.3 Ventilation
- 27.4.4 Stratification

27.5 Factors Affecting Indoor Air Conditions
- 27.5.1 Sun Heat Loads
- 27.5.2 Heat Sinks
- 27.5.3 Vapor Barriers
- 27.5.4 Heat Insulation

Learning Objectives

Information in this chapter will enable you to:

- Understand the concepts of climate and weather.
- Summarize the purpose of air-conditioning systems.
- Identify the layers of the atmosphere and the primary components of air.
- Understand the relationships between humidity, relative humidity, and dew point.
- Use a hygrometer to measure moisture in the air.
- Differentiate between wet-bulb and dry-bulb temperatures.
- Explain the principles of psychrometry and the use of psychrometric charts.
- Summarize the range of air conditions that fall within the human comfort range.
- Understand how air movement affects human comfort.
- Use anemometers, pitot tubes, and manometers to measure air velocity.
- Identify external factors that affect indoor air conditions.

Technical Terms

air
air conditioning (a/c)
climate
Comfort-Health Index
cooling degree day
degree days
dew point
dry-bulb temperature
effective temperature
equivalent temperature
exosphere
heat sink
heating degree day
hot-wire anemometer
humidity
hygrometer
mesosphere
pitot tube
psychrometric chart
psychrometry
relative humidity
sensible heat ratio (SHR)
stratification
stratosphere
swinging-vane anemometer
thermosphere
troposphere
vane anemometer
ventilation
weather
wet-bulb temperature
windchill index

Review of Key Concepts

Reviewing these concepts from earlier chapters will help you understand new concepts presented in this chapter:

- Enthalpy is the total amount of heat in a substance, calculated from an accepted reference temperature. Specific enthalpy is enthalpy per unit of mass. (Chapter 4)
- Heat that brings about a change of state with no change in temperature is called latent heat. Heat that causes a change in the temperature of a substance is called sensible heat. (Chapter 4)
- A manometer is a type of pressure gauge that measures values around atmospheric pressure. When measuring differential pressure with a manometer, air velocity can be determined. (Chapter 7)
- A manometer with a pitot tube is used for measuring air velocity in ductwork. The common procedure is to connect a pitot tube to a manometer and insert the pitot tube into the duct. This will give the technician both the total pressure and static pressure reading on the manometer. (Chapter 7)
- Charles' law states that at a constant pressure, the volume of a gas varies in direct proportion to temperature. With pressure held constant, the volume of a gas will increase as the gas heats up or will decrease as the gas cools down. (Chapter 5)
- Radiation is the transfer of heat by heat rays. The earth receives heat from the sun by radiation. Light rays from the sun turn into heat when they strike materials. (Chapter 4)

Introduction

Temperature, humidity, air movement, and air cleanliness are all conditions that affect how comfortable an environment is. A specific range of values for each of these conditions provides the most comfort. However, if one of these conditions falls outside of the comfort range, the other conditions can often be adjusted to compensate. For instance, high relative humidity tends to be uncomfortable. However, a relatively low temperature and rapid air movement may counteract it. In many homes during the wintertime, an increased room temperature and little air movement compensate for low relative humidity. This chapter addresses the temperature and humidity conditions that an HVAC system must maintain in order to provide for human comfort.

As the seasons change, accommodations must be made to ensure comfort. Winter heating conditions require automatic control of the heating source to maintain desired room temperatures. The lower the humidity, the higher the temperature required. Humidity control for winter conditions may require the addition of moisture by a humidifier. In the summertime, air-conditioning systems are used to maintain the desired room temperature. As warm, moist air is blown over the evaporator coil, the air is cooled and dehumidified.

Video

- Indoor Air Conditions

27.1 Climate

Weather refers to conditions in the atmosphere. These include temperature, wind velocity and direction, clouds, moisture, and atmospheric pressure. Weather affects the need for and requirements of air conditioning. The term ***climate***, when applied to outdoor conditions, describes the long-term weather trends for a region. When the term *climate* is used in reference to indoor environments, it refers to the conditions that are normally maintained in the conditioned space. Outdoor climates, of course, cannot be affected by air conditioning (heating, cooling, and humidity control). However, in an enclosed space, the factors that determine comfort can be completely controlled. Many homes and workplaces use air conditioning, furnaces, and humidity control to maintain a comfortable environment.

27.1.1 Equivalent Temperature

An ***equivalent temperature*** represents how warm the combination of humidity and temperature feels to the occupant of a space. The chart in **Figure 27-1** shows the equivalent temperatures for given combinations of temperature and relative humidity.

If the ambient air temperature is cooler than 98.6°F (36°C), air movement cools the human body. If the heating system provides over 15 to 20 feet per minute (fpm) of air movement, a temperature increase may be necessary to help maintain a comfortable indoor environment.

Equivalent Temperatures (°F)

Temperature (°F)	90%	70%	50%	30%	10%
100	102	99	97	95	92
	96	95	92	89	87
90	92	89	87	85	83
	87	85	83	81	80
80	82	80	79	78	76
	76	76	74	73	72
70	72	71	70	69	68
	68	67	66	66	65
60	62	62	62	62	61
	58	58	58	58	58
50	53	53	53	53	53
	47	47	47	47	47

Relative Humidity	90%	70%	50%	30%	10%
100	89	86	84	82	80
	85	83	81	79	77
90	82	80	78	76	75
	78	77	75	74	72
80	75	73	72	71	69
	71	70	69	68	67
70	68	67	67	66	64
	65	64	64	63	63
60	61	61	61	61	60
	58	58	58	58	58
50	53	53	53	53	53
	47	47	47	47	47

Comfort zone

Goodheart-Willcox Publisher

Figure 27-1. Chart listing the equivalent temperatures for various combinations of temperature and humidity. Comfortable combinations of temperature and humidity are highlighted. Note that with high relative humidity, the comfort zone has lower temperatures.

27.1.2 Definition of Air Conditioning

The American Society of Heating, Refrigerating and Air-Conditioning Engineers (ASHRAE) define ***air conditioning (a/c)*** as "the process of treating air so as to control simultaneously its temperature, humidity, cleanliness, and distribution to meet the requirements of the conditioned space."

In order to meet these demands, various parts of an air-conditioning system must work together. The systems are usually equipped with automatic controls in order to maintain the desired temperature inside a room under changing outdoor conditions. The system controls humidity by passing air over the cold evaporator surfaces, which causes excess humidity to condense out of the conditioned air. When humidity is high, increased air movement is beneficial. By contrast, in the winter heating season when the air is typically dry, a humidifier can be used to add moisture to the air.

In general, air filtering is accomplished the same way in summer and in winter. Air filtering equipment usually consists of very fine, porous substances through which air is drawn to remove dust and other particles. Activated carbon filters and electrostatic precipitators can be added to the usual filtering mechanisms to improve air cleaning. Air pollutants and methods for removing them from the air will be covered in more detail in Chapter 28, *Air Quality*.

Many industries air-condition their plants for two reasons: to provide comfort for their workers and to achieve more complete control of manufacturing processes and materials. Better control of temperatures and relative humidity during a manufacturing process improves the quality of the finished product.

27.2 Atmosphere and Air

Air is an invisible, odorless, and tasteless mixture of gases. The air surrounding the earth is called the *atmosphere*. It extends above the earth about 6,200 miles and is divided into several layers. See **Figure 27-2**.

The layer closest to the earth, the ***troposphere***, extends from sea level to 56,000′ (10.6 mi) at the equator.

Copyright Goodheart-Willcox Co., Inc.

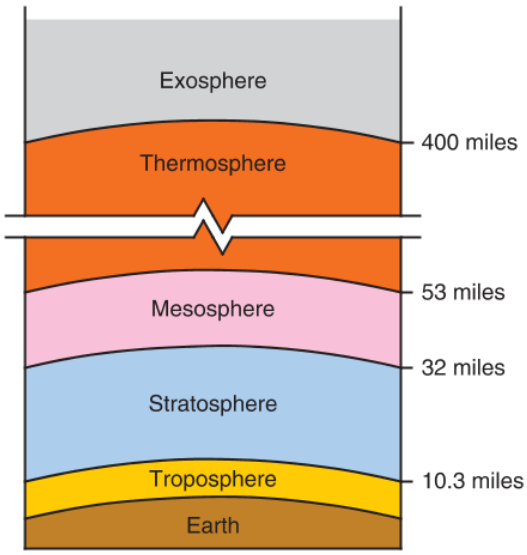

Goodheart-Willcox Publisher

Figure 27-2. The earth's atmosphere comprises several layers. The exosphere extends into outer space.

This layer contains 75% of the earth's air. The layer extending from 56,000′ (10.6 mi) up to 170,000′ (32 mi) is called the ***stratosphere***. The stratosphere contains the ozone layer.

The ***mesosphere*** extends from 170,000′ (32 mi) to 280,000′ (53 mi). The ***thermosphere*** extends from 280,000′ (53 mi) to 2,100,000′ (400 mi). This layer contains the ionosphere, a layer of charged particles, and is marked by temperatures that increase with altitude, reaching 2730°F (1500°C).

The ***exosphere*** is the outermost layer of earth's atmosphere. It extends outward from the edge of the thermosphere to a distance of 6,200 miles, as it gradually blends with space. Most satellites orbit in this layer of the atmosphere.

Air as we know it in our atmosphere is a mixture of oxygen, nitrogen, argon, carbon dioxide, hydrogen, sulfur dioxide, and water vapor (moisture). It also contains a very small percentage of rare gases. The exact composition of air changes with altitude and other factors. **Figure 27-3** lists the average percentages of these gases, both by volume and by weight, for air at sea level.

- Nitrogen. About three-fourths of the earth's atmosphere consists of nitrogen. Nitrogen is a gaseous element that does not readily combine with other substances. When combined with other elements, nitrogen is usually unstable. Nitrogen is combined commercially with hydrogen to form ammonia, which is the basis of most fertilizers and an important refrigerant, NH_3 (R-717). Liquid nitrogen is also a special purpose expendable refrigerant.
- Oxygen. The atmosphere is approximately 23% oxygen by weight. Oxygen readily combines with many substances. When fuels such as wood, coal, or oil are burned, their carbon and hydrogen combine with the oxygen in the atmosphere, forming carbon dioxide and water, respectively. The oxygen in the atmosphere is replenished by plants, which absorb carbon dioxide and release oxygen.
- Argon. Argon is a noble gas that composes approximately 0.93% of the atmosphere by volume. It is the most common and most widely used of the noble gases. Noble gases, also called inert gases, are very stable gases with extremely low reactivity.
- Carbon dioxide. Carbon dioxide makes up 0.03% to 0.04% of the atmosphere. Carbon dioxide is a combination of carbon and oxygen. Absorbed by growing plants, it becomes one of the building blocks in the development of plant cells.
- Hydrogen. Hydrogen (H_2), a very light gas, does not show in weight percentage. Hydrogen is present in most fuels. When burned, it combines with oxygen to form water (H_2O) in steam and vapor form.
- Sulfur dioxide. Sulfur dioxide is the most common gaseous contaminant. It is formed by combustion of fuels that contain sulfur. Many large power plants now have facilities for removing sulfur from these fuel sources and sulfur dioxide from the stack gases.

9

Components of Dry Air at Sea Level

Name	Chemical Symbol	Amount by Weight (%)	Amount by Volume (%)
Nitrogen	N_2	75.47	78.03
Oxygen	O_2	23.19	20.99
Argon	Ar	1.29	0.93
Carbon dioxide	CO_2	0.04	0.03
Hydrogen	H_2	0.00	0.01
Water	H_2O	0.00	0.00
Dust	—	0.00	0.00
Rare gases	—	0.01	0.01

Goodheart-Willcox Publisher

Figure 27-3. Chart listing the gases and substances that make up atmospheric air at sea level.

Copyright Goodheart-Willcox Co., Inc.

- Water vapor (moisture). The amount of water vapor in the atmosphere varies with the temperature. For any given time, the percentage of moisture in the air relative to the maximum amount the air can hold is indicated by the term *relative humidity*.
- Rare gases. Rare gases make up a very small percentage of the atmosphere. These gases include neon, helium, krypton, and xenon.

Atmospheric air is a combination of gases, water vapor, and pollutants. These pollutants vary considerably among different regions and time periods, and may include industrial pollution, smog, and pollen. Air contaminants also exist indoors. Indoor air pollution is among the top five environmental health risks. Air conditioning plays an important role in the reduction of indoor air contaminants. This role will be discussed further in Chapter 28, *Air Quality*.

27.2.1 Physical Properties of Air

People often do not think of air as matter because it is invisible and all around us. However, air has weight, volume, temperature, specific heat, and heat conductivity. In motion, air has momentum and inertia. It holds substances in suspension and in solution.

Air pressure at the earth's surface is due to the weight of air above the earth. Air pressure decreases as altitude increases. The higher the altitude, the less the volume of air is above. Less air being above results in a reduction of the weight of the air above. Air presses against the earth at sea level with a pressure of 14.7 psi (101 kPa).

Since air has mass, energy is required to move it. Once in motion, air has kinetic energy. For example, the weight of moving air turns wind turbines. The wind turbines convert the kinetic energy to mechanical or electrical energy.

According to Bernoulli's principle, increasing the velocity of air decreases the pressure. For example, in a tornado, the velocity is very high, reducing the pressure. Tiny dust particles may be picked up and held in suspension in moving air. These particles may remain in suspension for long periods of time.

The density of air varies with atmospheric pressure and humidity. The volume of space that air occupies under a given set of conditions is known as its *specific volume*. The less dense the air is, the greater its specific volume will be. One pound of air at standard conditions (14.7 psia [101 kPa], 69.8°F [21°C]) occupies 13.341 ft^3. One kilogram of air at standard conditions occupies 0.83285 m^3. By dividing the weight of air by volume it occupies, you can calculate its density. Air under standard conditions has a density of 0.07496 lb/ft^3 (1.2007 kg/m^3).

Air temperatures can be measured with either the Fahrenheit scale or the Celsius scale. Under ordinary conditions, glass-stemmed thermometers or digital thermometers can satisfactorily measure air temperature. Expanding metals, such as bimetal strips or rods, are also used. When measuring very low temperatures, thermocouple thermometers or resistance temperature detectors (RTDs) are used. Thermocouple thermometers, pyrometers, and thermistor thermometers are used for measuring high temperatures.

The specific heat of air is the amount of heat required to raise the temperature of one pound of air one degree Fahrenheit, or one kilogram of air one degree Celsius. The specific heat of air at sea level is 0.24 Btu/lb (0.557 kJ/kg).

Air has low heat conductivity, meaning that it does not transfer heat efficiently. For this reason, air spaces are often used for insulating purposes.

27.2.2 Humidity

Humidity is the presence of moisture or water vapor in the air. Since humidity is moisture in vapor form, it is invisible. The amount of moisture that air will hold depends on the air temperature. Warm air holds more moisture than cold air.

The amount of humidity in the air affects the rate of evaporation of moisture from a surface. Dry air causes rapid evaporation, cooling the surface quickly. Moist (humid) air prevents rapid evaporation of moisture from a surface. Since less moisture evaporates in humid conditions, the surface does not cool as rapidly. This principle explains why people are more prone to heat exhaustion in hot, humid climates than in hot, dry climates.

Relative Humidity

Relative humidity (rh) is a term used to express the amount of moisture in an air sample compared to the total amount of moisture the same sample would hold if it were completely saturated at the same temperature. Relative humidity is stated as a percentage. For example, air with a relative humidity of 25% contains only one-fourth of the moisture it is capable of holding.

A water vapor saturation curve, **Figure 27-4**, is a graph showing the amount of water that air can hold at different temperatures. The line from Point A to Point B represents what happens when saturated air is warmed. Point B contains 111 grains of moisture per pound of air at 85°F (29.4°C). The saturated condition for air at the same temperature (at Point C) is 183 grains of moisture per pound of air. The line between Point B and Point C represents how much additional moisture

Copyright Goodheart-Willcox Co., Inc.

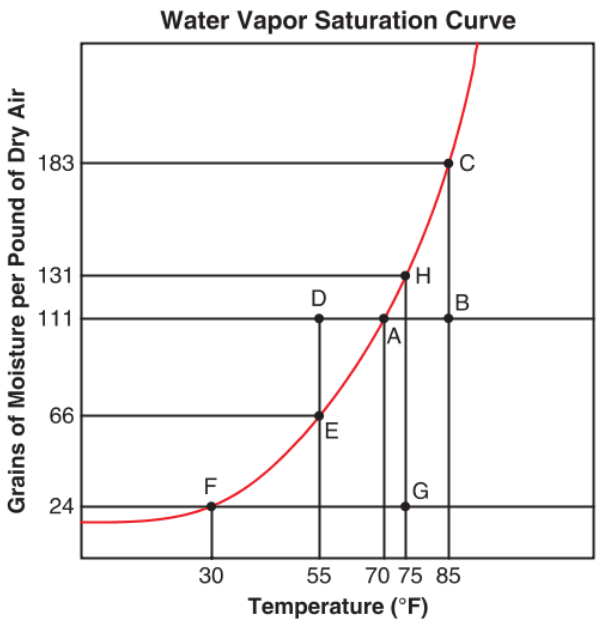

Goodheart-Willcox Publisher

Figure 27-4. A typical water vapor saturation curve for air. As the temperature of the air increases, the amount of moisture it can hold also increases.

the air could hold. In this case, the air could hold an additional 72 grains of moisture per pound.

Therefore, the relative humidity at Point B is:

$$\text{rh} = \frac{111 \text{ grains/lb}}{183 \text{ grains/lb}} \times 100\%$$
$$= 0.606 \times 100\%$$
$$= 61\%$$

The lines from Point A to Point D and Point D to Point E represent what happens when saturated air at 70°F (21.1°C) is cooled to 55°F (12.8°C). Air at 70°F (21.1°C) will hold 111 grains of moisture per pound (Point A), but the same air at 55°F (12.8°C) will hold only 66 grains of moisture per pound (Point E). The line between Point A and Point D represents how much the air is cooled. The line between Point D and Point E represents the moisture condensed out of the air as it cools. To calculate the amount of moisture condensed, subtract the moisture content of the air at 55°F (12.8°C) from the moisture content of the air at 70°F (21.1°C):

$$111 \text{ grains/lb} - 66 \text{ grains/lb} = 45 \text{ grains/lb}$$

A typical outdoor condition in winter is represented at Point F. This outdoor air is 30°F (–1°C) and has 100% relative humidity. At that temperature, the air holds 24 grains of moisture per pound. If the same air is brought indoors and heated to 75°F (24°C) with no moisture added, its new condition is shown at Point G. The saturated condition at 75°F (24°C) would be 131 grains per pound (Point H). The original air had only 24 grains of moisture per pound. Therefore, the relative humidity of the air at Point G is calculated as follows:

$$\text{rh} = \frac{24 \text{ grains/lb}}{131 \text{ grains/lb}} \times 100\%$$
$$= 0.18 \times 100\%$$
$$= 18\%$$

Indicators of Low Humidity

Low atmospheric humidity is indicated by an increase in the amount of noticeable electrostatic energy. As a person moves about and touches grounded metal objects, a spark jumps from the hand or fingers to the object. Also, human hair tends to become more unmanageable. The surface of the skin and membranes in the nose become dry. Furniture joints shrink and become loose. Woodwork, such as wood in doors and floors, can crack. If these symptoms are present, more moisture must be added to the air to create comfortable conditions.

Dew Point

Dew point is the temperature below which water vapor in the air will start to condense. In other words, it is the temperature at which air will have 100% relative humidity.

A window during the winter heating season offers a good example of dew point. **Figure 27-5** shows the

9

Dew Point at Various Humidity Levels		
Relative Humidity of Air (%)	Dry-Bulb Temperature of Surface When Condensation Starts (°F)	
	70°F (21°C) Air Temp.	80°F (27°C) Air Temp.
100	70	80
90	67	77
80	64	73
70	60	69
60	56	65
50	51	60
40	45	54
30	37	46
20	28	35

Goodheart-Willcox Publisher

Figure 27-5. Table listing the temperature to which a surface must be cooled before condensation starts. The table is based on an ambient air temperature of 70°F or 80°F (21°C or 27°C).

Copyright Goodheart-Willcox Co., Inc.

surface temperature that will cause condensation (dew point) for various humidity levels. Cold air cannot hold as much water vapor as warm air, so when the outdoor air temperature falls and the interior of the home is heated, water vapor (condensation) forms on the inside (warm surface) of the window.

Several methods can be used to find the dew point. Dew point is professionally and accurately measured using a chilled mirror hygrometer, which is an expensive and highly sensitive thermometer. Dew point can be determined inexpensively and with fair accuracy using the following method. Cut a shiny aluminum soda can in half. Fill the can approximately 2/3 full of water. Add ice cubes to the water. This will lower the can's surface temperature. Stir the mixture. Continue adding ice until condensation forms on the exterior of the can. When condensation forms on the exterior of the can, this indicates the dew point temperature.

Humidity Measurement

Factors such as quality controls, product testing, energy efficiency, and the comfort of the work environment have created an increased need for humidity measurement. A wide variety of instruments can be used to measure humidity. These range from simple mechanical indicators to highly complex and expensive analytical instruments.

A ***hygrometer*** is an instrument that measures moisture in the air. Originally, the operation of these instruments depended on the use of some moisture-absorbing material. Human hair, wood, and fibers were often used. These materials change their shape or size, depending on the relative humidity of the air. The moisture absorbing materials were linked to a gauge needle. As the materials changed size or shape, they moved the gauge needle, **Figure 27-6**.

Today, relative humidity is most often measured electronically. The most frequently used electronic instruments base their measurements on electronic impedance or input from capacitive sensors that respond to varying levels of water vapor pressure.

Typically, humidity is displayed in the form of percentage relative humidity (% rh), which can be easily converted into other measurement variables, such as dew point or wet-bulb temperature. Modern instruments provide measurements over wide humidity and temperature ranges. Such instruments are available in a number of configurations, such as handheld models, analog or digital transmitters, and data loggers. See **Figure 27-7**.

Palm-held electronic hygrometers are equipped with quick and accurate sensors. These hygrometers can use the power of mobile PCs to display, record, document, annotate, and report measurements. Such units are typically capable of measuring relative

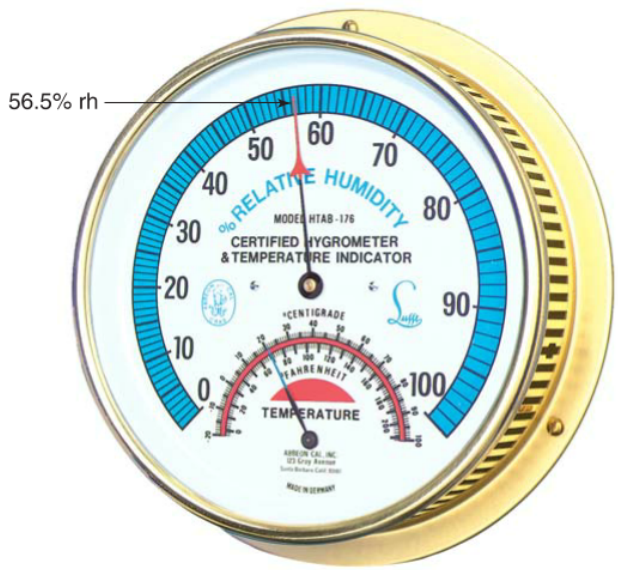

Abbeon Cal, Inc.

Figure 27-6. Wall-type hygrometer and temperature indicator calibrated in percent of relative humidity.

Extech Instruments Corp.

Figure 27-7. Humidity meter and data logger that can measure relative humidity, temperature, dew point, and wet-bulb temperature.

Copyright Goodheart-Willcox Co., Inc.

humidity, temperature, dew point, wet-bulb temperature, and more. They have internal data memory and are typically capable of storing enhanced survey information, data and text, and graphic notes under specific file names. In addition, they have an infrared port that can be used to transfer data to a PC for detailed analysis and reporting. The data that is collected can be reviewed at a later time.

It is sometimes helpful to have an extended reading of temperature and humidity in a controlled space. A seven-day recorder that indicates the moisture and temperature can fulfill this purpose, **Figure 27-8**. When using this instrument, refer to a psychrometric chart to find the relative humidity. Psychrometric charts are explained later in this chapter.

Desiccants

Desiccants are substances that absorb moisture from the air. Common desiccants include activated alumina, silica gel, calcium sulfate, and zeolites. Many desiccants can be reactivated (dried out) by heating.

Often, instruments are packaged in containers with a packet of desiccant. The desiccant absorbs the moisture in the container, keeping the instrument dry to reduce corrosion.

Sealed Unit Parts Co., Inc.

Figure 27-8. Seven-day temperature and humidity chart recorder with a temperature range from –20°F to 120°F (–30°C to 50°C). Note the red and blue marker pens used to indicate temperature and humidity. Also note the remote sensor.

Humidity Controls

Health studies indicate that humidity control is an important factor in air conditioning. Humidity controls operate during the winter heating season to add moisture to the air. They keep the humidity inside the conditioned space at a satisfactory level even though the air outside is dry.

Humidity controls operate in the summer to remove moisture from the air. To remove moisture in a home, a central air-conditioning system may use the cold evaporator to condense moisture out of the air. A drip pan and drain line or condensate pump carry the moisture to a drain. Some air-conditioning systems use a central dehumidifier to dehumidify all the air in a building. An alternative is to use a portable dehumidifier in damp rooms, such as in the basement for local dehumidification.

To remove moisture in large commercial air-conditioning installations, the humidity controls usually operate solenoid valves or dampers that vary the airflow over the air-conditioning system's evaporators. The control element may be a synthetic fiber or human hair. These elements are sensitive to the amount of moisture in the air. Construction principles of a humidity control mechanism are shown in **Figure 27-9**.

Thermo-humidigraphs (temperature and humidity recorders) may be equipped with alarms. These will alert attendants if the temperature or humidity fails to remain at the proper level. This is helpful in computer rooms and other installations that require close humidity control. **Figure 27-10** shows a temperature and humidity recorder.

9

27.2.3 Air Temperature

The behavior of air varies with its temperature. As previously stated, the higher the temperature, the greater the air's ability to hold moisture. Air temperature is measured with a thermometer. Several different scales are commonly used, including Fahrenheit, Celsius, and Kelvin.

Dry-Bulb Temperature

Human comfort and health depend a great deal on air temperature. In reference to air conditioning, the air temperature measurement most frequently used is ***dry-bulb temperature***. It is taken with the sensitive element of the thermometer in a dry condition. The dry-bulb temperature does not take into account the effect of humidity in the air.

Wet-Bulb Temperature

If a moist wick is placed over a thermometer bulb, the evaporation of moisture from the wick will lower the thermometer reading. The resulting temperature

Copyright Goodheart-Willcox Co., Inc.

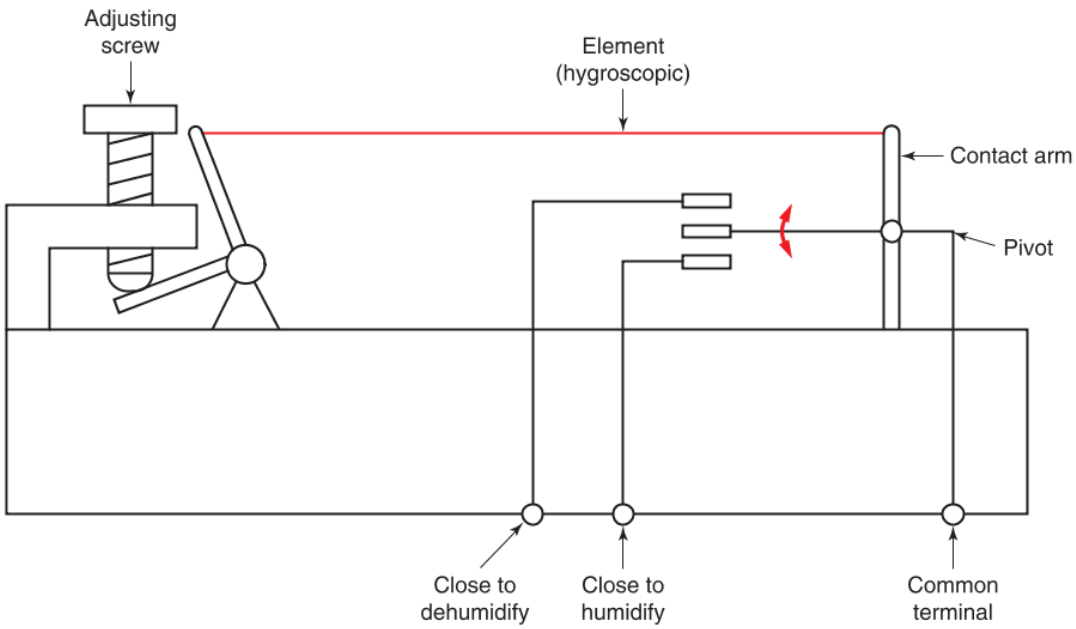

Goodheart-Willcox Publisher

Figure 27-9. Diagram showing a simple humidity control mechanism. When the element absorbs moisture, it expands. This expansion causes the contact arm to rotate clockwise around the pivot, closing the dehumidify circuit. When the element becomes dry, it shrinks, causing the contact arm to rotate counterclockwise around the pivot. This closes the humidify circuit. The adjusting screw sets the preload on the element.

Sealed Unit Parts Co., Inc.

Figure 27-10. Digital temperature and humidity data logger.

measurement is known as ***wet-bulb temperature***. Wet-bulb temperature is a function of the amount of moisture in the air. The rate of evaporation from the wet wick on the bulb, and the temperature difference between the dry bulb and wet bulb, depends on the humidity of the air. Wet-bulb temperature is always lower than dry-bulb temperature, but will be exactly the same at 100% relative humidity. If the air surrounding a wet-bulb thermometer is dry, evaporation from the moist wick will be rapid, increasing the drop in temperature. If the air is very moist, evaporation will be slower, reducing the drop in temperature. **Figure 27-11** compares dry-bulb temperature and wet-bulb temperature.

When the air is saturated with moisture, no water can evaporate from the cloth wick, and the wet and dry-bulb temperatures remain identical. However, if the air is not saturated, water can evaporate from the wick, and the wick's temperature is lowered. Then, heat from the mercury flows to the wet wick and lowers the thermometer's temperature.

The wet-bulb reading depends on how fast the air passes over the bulb. Also, the wet bulb should be protected from heat-radiating surfaces, including radiators and electric heaters. Errors as high as 15% are possible if too much radiant heat is present.

Perception of Temperature

Air temperatures in the United States vary from a low of about –55°F (–48°C) to a high of around 120°F (49°C). The desirable temperature is 72°F (22°C). **Figure 27-12** shows how different combinations of relative humidity and temperature affect comfort.

The normal temperature of the human body is 98.6°F (37°C). Skin temperature is lower, about 91°F (33°C). In

Copyright Goodheart-Willcox Co., Inc.

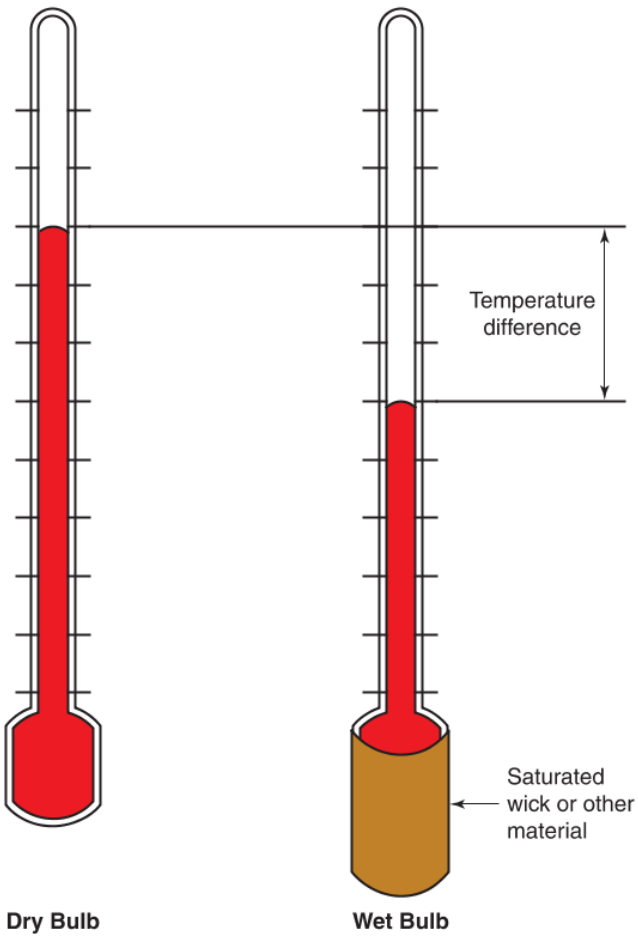

Goodheart-Willcox Publisher

Figure 27-11. A wet-bulb thermometer is essentially a dry-bulb thermometer with a moist wick over the bulb. Note that temperature shown on wet-bulb thermometer is considerably lower than dry-bulb thermometer. This indicates that the air is fairly dry.

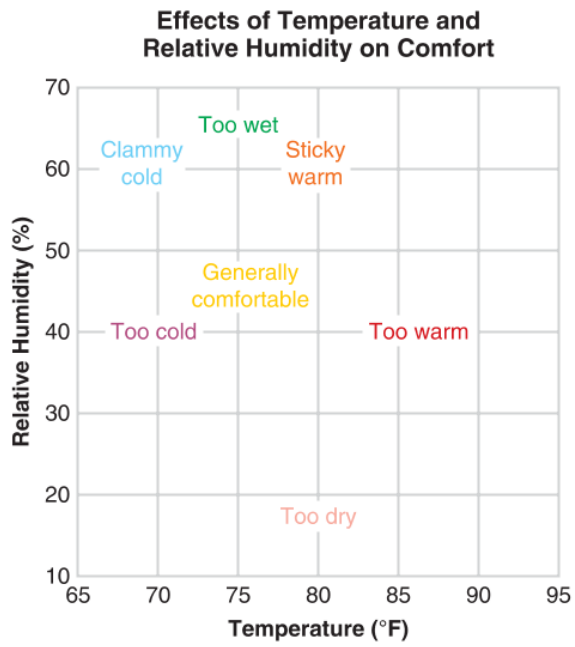

Lennox Industries Inc.

Figure 27-12. Graph demonstrating the effects of temperature and relative humidity on comfort. Most people will feel comfortable at the temperature and relative humidity combinations near the center of the graph.

Temperature/Humidity Ranges for Comfort

Conditions	Relative Humidity	Acceptable Operating Temperatures	
		°F	°C
Summer	30%	76–82	24.5–28
	60%	74–78	23–25.5
Winter	30%	69–78	20.5–25.5
	60%	68–75	20–24

Adapted from ASHRAE 55-2010—Thermal Environmental Conditions for Human Occupancy

Figure 27-13. Table showing comfortable temperature ranges for the humidity conditions indicated.

temperate zones, the average outdoor temperature in winter is well below the body temperature. Clothing is required to help conserve body heat. Also, heat needs to be added to occupied spaces for the comfort of its occupants. According to ASHRAE 55-10, certain temperature/humidity ranges are most comfortable for the majority of people, **Figure 27-13**.

The human body loses heat easily when the air temperature falls below 98.6°F (37°C). The body also loses some heat at air temperatures above 98.6°F (37°C) through evaporation of perspiration and by respiration. Moisture is fed to the skin from the sweat glands. Evaporation of this moisture lowers the skin temperature. The evaporation of moisture constitutes a considerable heat exchange from the human body. Evaporative heat exchange can be considered a form of convection. The evaporated moisture is carried away along with its heat content.

In order to maintain comfortable temperatures, energy is required to heat or cool the air to the desired temperature. The specific heat of dry air is 0.24 Btu/lb.

Degree Days

Degree days are a measure used to indicate the heating or cooling needed for a given region. Calculations are based on a temperature of 65°F (18°C). If the average temperature for a day is below this temperature, it is referred to as ***heating degree day***. If the average temperature for the day is above 65°F (18°C), it is referred to as a ***cooling degree day***. The numeric

Copyright Goodheart-Willcox Co., Inc.

value of the heating or cooling degree days equals the difference between the average temperature that day and 65°F (18°C).

Formula for calculating degree days:

$$\text{degree days (F)} = 65°\text{F} - \frac{\text{high temp} + \text{low temp}}{2}$$

Example:
The low temperature for a certain day was 28°F (–2°C). The high temperature for the same day was 36°F (2°C). What was the number of heating degree days in Fahrenheit?

Solution for Fahrenheit degrees:

$$\begin{aligned}\text{degree days (F)} &= 65°\text{F} - \frac{28°\text{F} + 36°\text{F}}{2}\\ &= 65°\text{F} - 32°\text{F}\\ &= 33 \text{ heating degree days}\end{aligned}$$

If the temperature conditions continued for two days, the result would be 66 heating degree days. If Monday has 30 cooling degree days and Tuesday has 20 cooling degree days, the result is 50 cooling degree days for the two days.

Celsius degree days are calculated the same way as Fahrenheit degree days. For the equations below, use the Celsius numbers from earlier.

Solution for Celsius degrees:

$$\begin{aligned}\text{degree days (C)} &= 18°\text{C} - \frac{\text{high temp} + \text{low temp}}{2}\\ &= 18°\text{C} - \frac{2°\text{C} + (-2°\text{C})}{2}\\ &= 18°\text{C} - 0°\text{C}\\ &= 18 \text{ degree days (C)}\end{aligned}$$

Degree days can be added by weeks, months, or for a season. To do this, add all of the heating degree days together for the period and record the total. Then, add all of the cooling degree days together for the period and record the total. The two totals provide an estimate of the heating and cooling demands for the period. You can then divide the totals by the numbers of days in the period to determine the average daily heating and cooling demands for the period.

27.2.4 Psychrometric Properties of Air

Psychrometry is the science studying the thermodynamic properties of air and water vapor. Knowledge of psychrometry allows the technician to better control temperature and humidity of the air in an air-conditioning system. The comfort of occupants is due not only to the temperature of the surrounding air, but also to the level to which this air is saturated with water vapor.

The use of psychrometric principles allows technicians to design air-conditioning systems that control environmental conditions. **Figure 27-14** shows a computer system that interfaces with the air-conditioning and filtration systems in a large industrial facility. Such systems monitor and maintain temperature and humidity within preset levels.

Tables and graphs have been developed to show the pressure, temperature, heat content, volume of air, and steam content of air. A pressure of 29.92 in. Hg (76 cm Hg) is used as standard atmospheric pressure. These psychrometric charts display a representation of air properties in a visual format. Psychrometric charts are important in the designing and sizing of air-conditioning systems. Their use ensures efficiencies based on the specifics of a site. Psychrometric charts will be further described in a later section.

Psychrometer

Airflow over a wet-bulb thermometer should be quite rapid to ensure accuracy. In the past, a sling psychrometer was often used to whirl a pair of thermometers, one dry-bulb and one wet-bulb. The benefit of a sling psychrometer was that it offered a simple, rapid measurement of relative humidity without using tables, charts, or formulas, **Figure 27-15**.

To use a sling psychrometer, the wick on the wet bulb was saturated and then the sling psychrometer was whirled. When the mercury stopped dropping,

Johnson Controls, Inc.

Figure 27-14. A computerized building automation system can control energy usage, environmental conditions, fire alarm and suppression systems, and security systems throughout a building.

Copyright Goodheart-Willcox Co., Inc.

Abbeon Cal, Inc.

Figure 27-15. A sling psychrometer uses a dry-bulb and a wet-bulb thermometer to determine relative humidity.

the wet bulb would be read immediately, followed by reading the dry bulb. The wet-bulb temperature was placed over the dry-bulb temperature scale on a psychrometer slide rule. An arrow on the scale indicated the relative humidity.

Electronic psychrometers can measure dew points even in extremely cold conditions. They can also display relative humidity, temperature, and dew point simultaneously. Some digital psychrometers provide a port so the data they collect can be downloaded to a PC, **Figure 27-16**.

Psychrometric Charts

A ***psychrometric chart*** is a graph of the properties (dry-bulb and wet-bulb temperatures, relative humidity, specific volume, and specific humidity) of air. It is used to determine how changes in one property affect the other properties of the air. At first glance, a psychrometric chart may seem complicated and difficult to read. However, once you familiarize yourself with the lines on the graph and what they represent, you will find a psychrometric chart to be a relatively simple and useful tool.

Figure 27-17 shows the lines on the psychrometric chart that represent constant conditions. In **Figure 27-17A**, the red lines represent constant dry-bulb temperature. These lines represent the temperature of the air without accounting for the effect of humidity. They are always vertical lines.

In **Figure 27-17B**, the red lines depict constant wet-bulb temperatures. These lines represent the temperature of the air adjusted for the effect of humidity.

In **Figure 27-17C**, the red lines represent constant specific humidity. The specific humidity is simply a measure of the quantity of moisture in the air. These lines are always horizontal. You will notice that on the left side of the graph, the red lines all end at different points, leaving the left edge of the graph as a curve. This occurs because there is a maximum amount of moisture that air at any given temperature is capable of holding.

For example, air with a temperature above 35°F (1.7°C) is capable of holding 30 grains of moisture per pound, but air must be over 80°F (26.7°C) in order to

Extech Instruments Corp.

Figure 27-16. Electronic psychrometers are available in numerous configurations. A—This digital psychrometer measures relative humidity (rh) directly and calculates wet-bulb temperature. B—This psychrometer can be used to measure air's relative humidity, surface temperature, and dew point. This model includes a port for connecting the instrument to a personal computer.

9

Copyright Goodheart-Willcox Co., Inc.

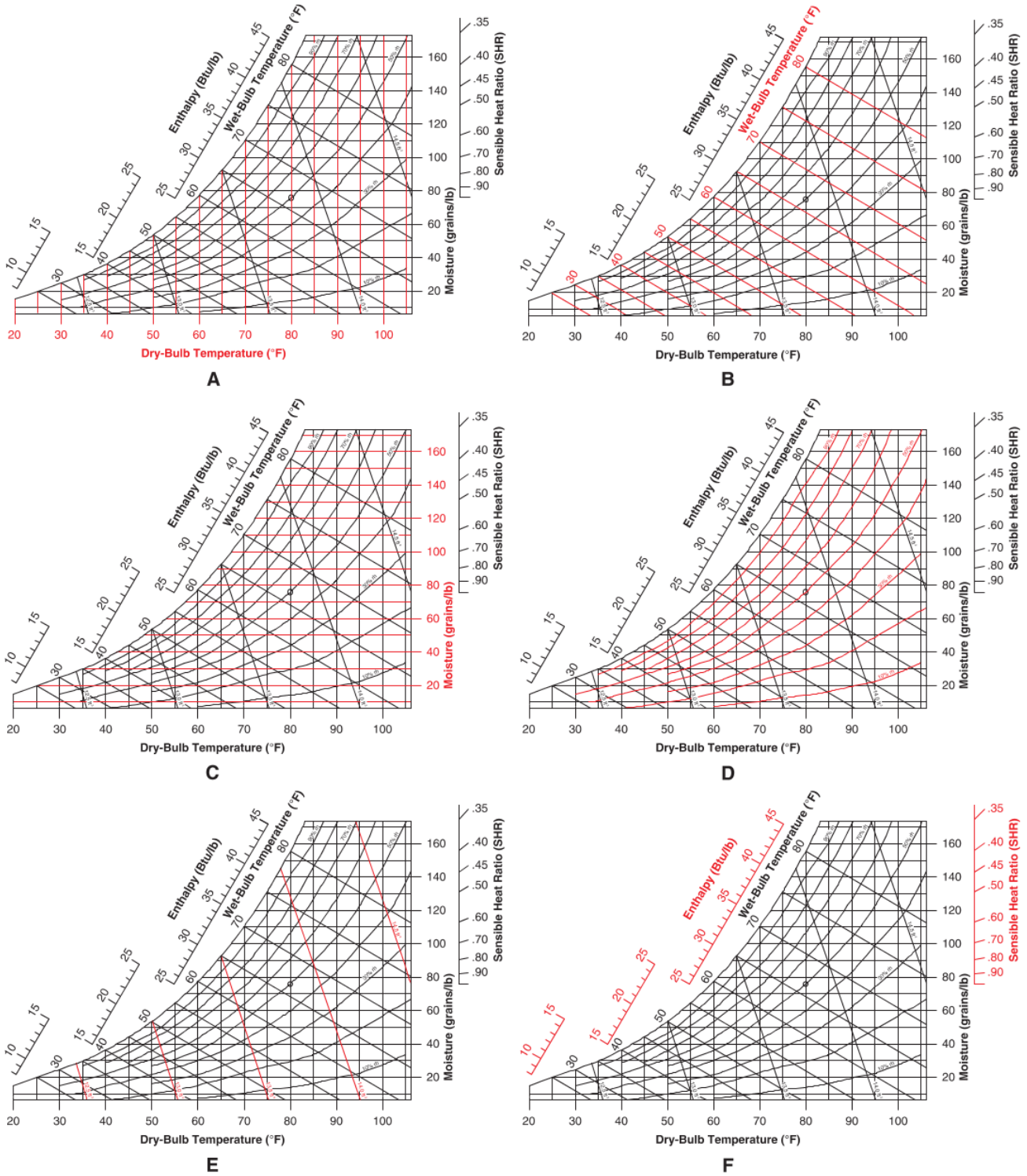

Goodheart-Willcox Publisher

Figure 27-17. A psychrometric chart is a graph of temperature and humidity conditions. Because of the interdependent relationships among different air properties, the graph is useful for determining unknown air properties based on known properties. Lines representing various properties are shown in red on the charts. A—These lines represent constant dry-bulb temperatures. B—These lines represent constant wet-bulb temperatures. C—These lines represent constant specific humidity levels. D—These lines represent constant relative humidity levels. E—These lines represent constant specific volumes. F—These scales are used to determine the total heat energy in the air sample and the ratio of sensible heat to latent heat.

Copyright Goodheart-Willcox Co., Inc.

hold 160 grains of moisture per pound. The quantity of moisture air can hold increases as the temperature of the air increases.

In **Figure 27-17D**, the red lines represent constant relative humidity (%). The relative humidity is the ratio between the amount of moisture the air is capable of holding (which is dependent on its temperature) and the amount of moisture the air is actually holding. The 100% relative humidity line, the upper curve along the graph, is also known as the dew point or saturation temperature line. The line for air with 0% relative humidity would be completely horizontal and positioned right on top of the dry-bulb temperature scale. Note that the curvature of the lines increases as the relative humidity increases.

In **Figure 27-17E**, the red lines represent constant specific volume. Keep in mind that specific volume is inversely proportional to the air's density. As specific volume increases, air density decreases. Also, note that the specific volume increases with temperature and humidity. This is Charles' law in action. With pressure maintained at a constant value, specific volume and temperature will both increase or decrease together. With more volume, more moisture (humidity) can be absorbed into the air.

In **Figure 27-17F**, the scales representing enthalpy and sensible heat ratio are shown in red. You will notice that the lines on these scales do not extend across the graph. In order to plot these values on the graph, a technician would position a straightedge so it crosses the graph and aligns with the hash mark for the desired value on the scale.

Enthalpy is the total heat content in the air sample. Remember that there are two different types of heat. Sensible heat changes the temperature of the air, and latent heat changes the level of humidity in the air. The hash marks on the scale at the left side of the chart represent the sum of latent heat and sensible heat in the sampled air in Btu/lb. Note that if these hash marks are extended so they cross the graph, they would be parallel to the wet-bulb temperature lines.

The ***sensible heat ratio (SHR)*** is the amount of heat that affects the air temperature compared to the total heat added to or released from the air. It is shown on the scale at the right side of the chart. A horizontal line on the graph represents a change in dry-bulb temperature only (pure sensible heat). A vertical line on the graph represents a change in the air's moisture content only (pure latent heat). The lines on the sensible heat ratio scale are horizontal at the bottom of the scale and more angled at the top of the scale. This occurs because the values at the top of the scale represent an increased percentage of latent heat and a decreased percentage of sensible heat. This scale is useful for determining heat requirements when heating or cooling processes are plotted on the graph.

Reading a Psychrometric Chart

Each point on a psychrometric chart represents air at a specific set of conditions. The primary conditions displayed on the graph are dry-bulb temperature, wet-bulb temperature, specific humidity, relative humidity, and specific volume. If any two values are known, the chart can be used to determine the other values.

To plot a point on the chart, simply find the value of your first measured property on the appropriate scale. Then, find the value of the second measured property on the appropriate scale. Follow the lines extending from those values until they intersect inside the graph.

For example, imagine a sling psychrometer is used to measure dry-bulb and wet-bulb temperatures. The dry-bulb temperature is 80°F (26.7°C) and the wet-bulb temperature is 60°F (15.6°C). Refer to **Figure 27-18**.

Locate 80°F on the dry-bulb temperature scale at the bottom of the graph and 60°F on the wet-bulb scale on the left side of the graph. Trace the lines extending from those points (orange line for dry-bulb temperature and green line for wet-bulb temperature) until they intersect on the graph at Point A. This is the point that represents the properties of the air.

Place a straightedge through Point A and parallel to the specific humidity lines. Follow the straightedge to the specific humidity scale on the right side of the graph (see the dotted blue line). Note that the specific humidity of the air is roughly 45 grains per pound. Point A is sitting on the curve that represents a relative humidity of 30% (red curved line).

To the left of Point A is the specific volume line that represents 13.5 cubic feet (yellow line). If you look to the right of Point A, you see the specific volume line that represents 14.0 cubic feet (pink line). Since Point A sits between these two lines, the air's specific volume is 13.75 cubic feet per pound.

Next, place a straightedge along the wet-bulb temperature line and extend the line so it intersects with the enthalpy scale. Note that the air contains approximately 26 Btus of heat energy per pound.

Point B on the graph represents standard comfort conditions. Point B has the same dry-bulb temperature as Point A. However, the specific humidity scale to the right of Point B indicates that the air at Point B contains approximately 75 grains per pound of moisture, compared to 45 grains per pound at Point A. As a result, the relative humidity at Point B is 50% rather than 30%.

To the upper left of Point B, you will see that the wet-bulb temperature is about 67°F, and its enthalpy is 31 Btu/lb. In order to change the air from the condition

Copyright Goodheart-Willcox Co., Inc.

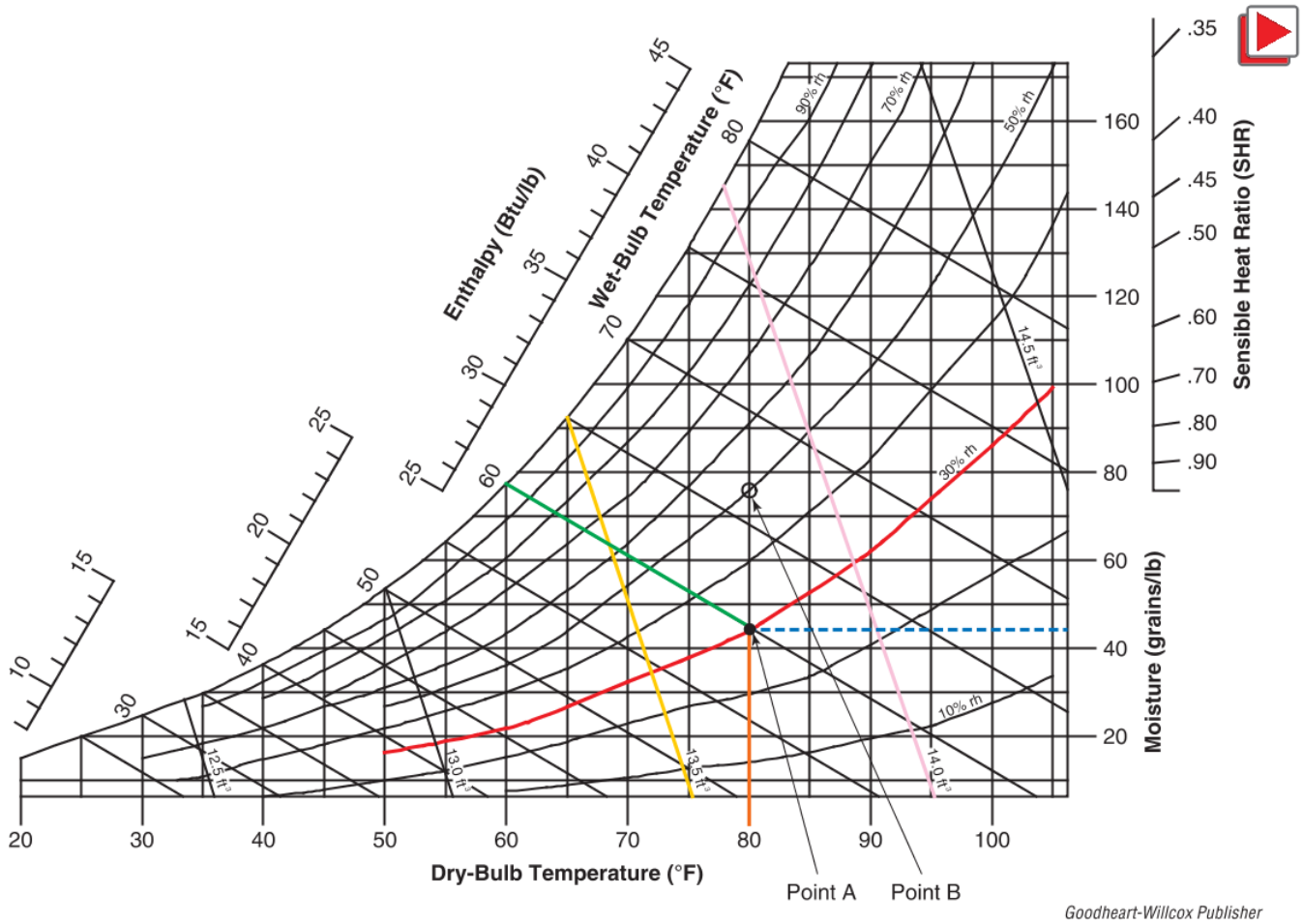

Figure 27-18. A typical psychrometric chart. All of the graph lines relating to conditions at Point A are shown in color. Point B represents standard comfort conditions. Notice that Point B is directly above Point A, indicating that the air at Point B is the same dry-bulb temperature as the air at Point A, but with more humidity.

shown at Point A to the condition at Point B, 5 Btus of latent heat and 30 grains of moisture would need to be added to each pound of air.

In the following example, use dry-bulb and wet-bulb temperatures to determine the relative humidity. Refer to **Figure 27-19**.

Example:
Dry-bulb temperature is 75°F (24°C). If the wet-bulb temperature is 60°F (16°C), what is the relative humidity?

Solution:
Follow the vertical line corresponding to the 75°F (24°C) dry-bulb temperature. Then follow the 60°F (16°C) wet-bulb temperature line. These lines cross each other at Point A. This point is just above the 40% relative humidity line. Therefore, the correct answer would be about 41% relative humidity.

In the following example, use dry-bulb temperature and relative humidity to find the dew point. Refer to **Figure 27-19**.

Example:
A sample of air has a dry-bulb temperature of 80°F (27°C) and a relative humidity of 60%. Determine the dew point.

Solution:
Find where the 80°F (27°C) dry-bulb line crosses the 60% relative humidity line. This point is labeled B. If the air represented by this point were cooled without a change in moisture content (represented on the psychrometric chart by the dotted horizontal line), the dew point line would be intersected at about 65°F (18°C). This is labeled as Point C.

Therefore, 65°F (18°C) is the dew point for the sample of air. The 80°F (27°C) temperature and the

Copyright Goodheart-Willcox Co., Inc.

60% relative humidity could represent a typical summer evening. Dew would appear on surfaces when the 65°F (18°C) temperature was reached.

In the following example, use dry-bulb temperature and specific humidity to find relative humidity. Refer to **Figure 27-19**.

Example:
Find the relative humidity when the dry-bulb temperature is 75°F (24°C) and the specific humidity is 100 grains per pound of dry air.

Solution:
First, find the vertical line representing a constant dry-bulb temperature of 75°F (24°C). Follow that line until it crosses the horizontal line representing 100 grains of moisture per pound of dry air. The intersection point is labeled Point D. This point falls between the 70% and 80% relative humidity lines. The answer would be a relative humidity of about 77%.

Study the psychrometric chart carefully. It provides a simple way for determining the various conditions of air. Remember, the warmer the air, the more moisture it will hold.

Using Psychrometric Charts

Many air conditioning problems in this text will require the use of a psychrometric chart. When air conditions are plotted for the various stages in a heating, ventilation, or air-conditioning process, a psychrometric chart can reveal exactly what is happening during each stage of the process.

People can be comfortable under a variety of temperature and humidity combinations. Most people are comfortable in an atmosphere with the relative humidity between 30% and 70% and the temperature between 70°F and 85°F (21°C to 29°C). These temperature and humidity conditions are plotted on a psychrometric chart in **Figure 27-20**. Every point inside the red lines represents a comfortable set of air conditions.

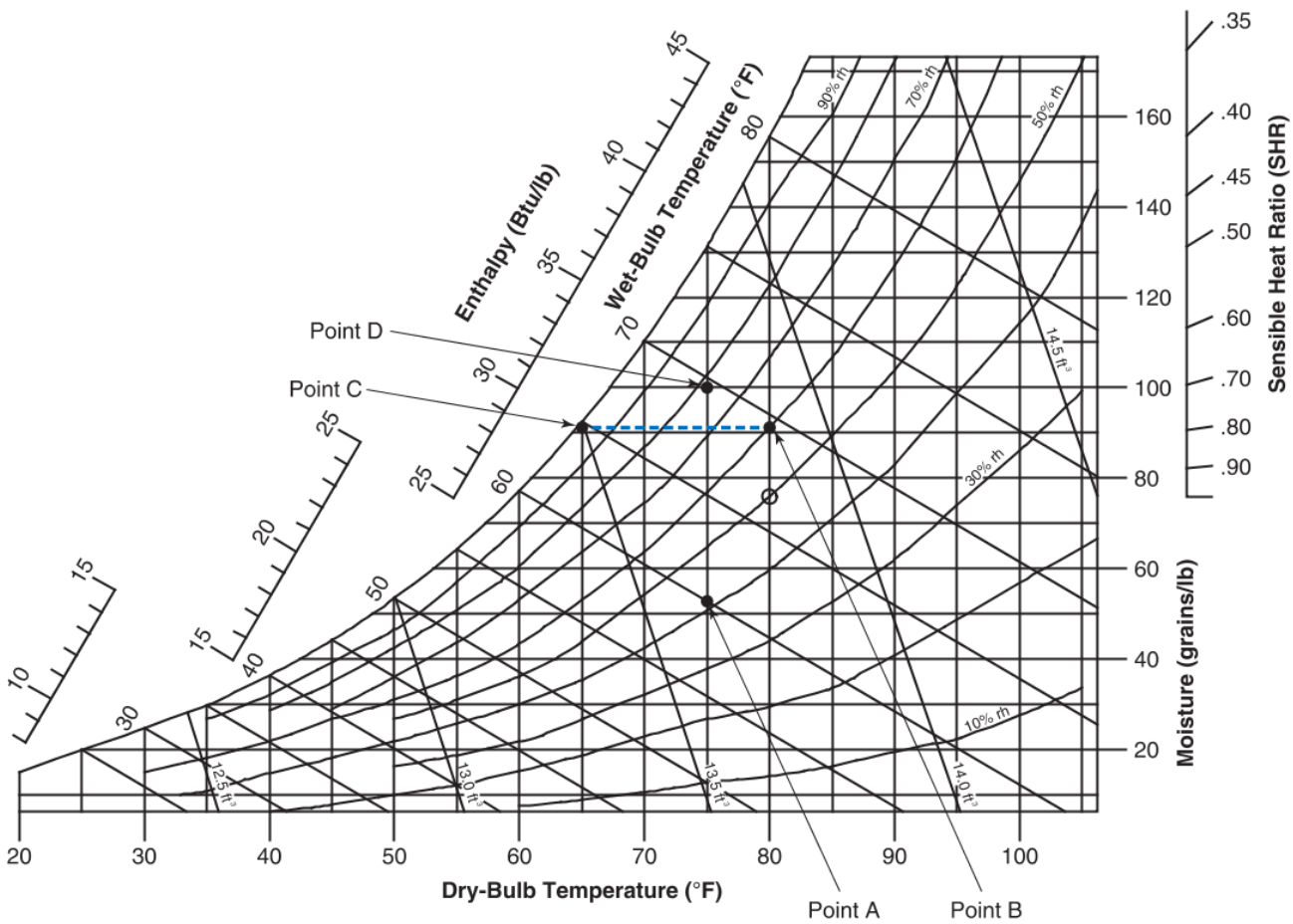

Goodheart-Willcox Publisher

Figure 27-19. With practice, you should be able to quickly and easily read psychrometric charts.

Copyright Goodheart-Willcox Co., Inc.

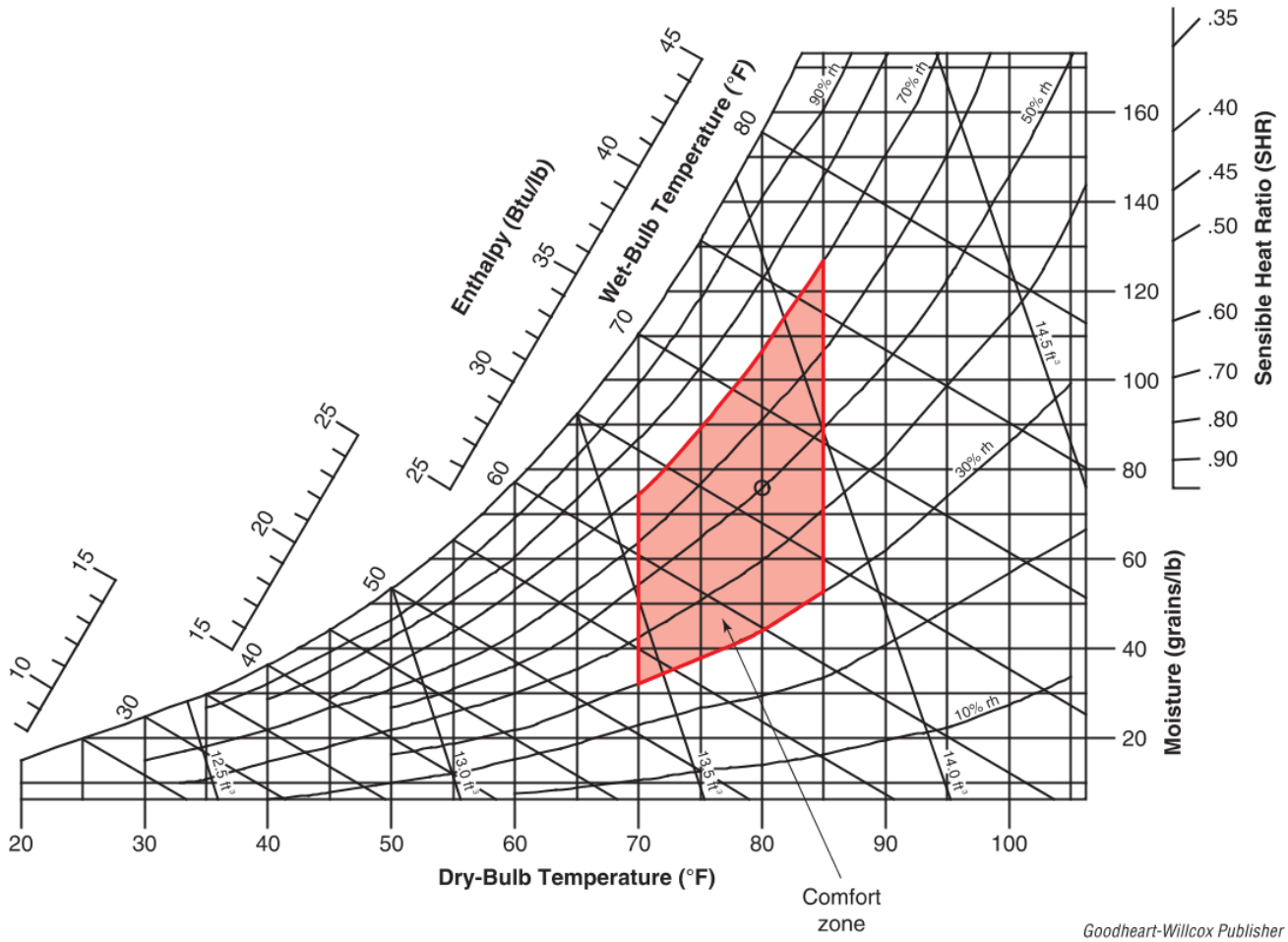

Figure 27-20. The four extremes of the human comfort zone are plotted on this psychrometric chart. Any combinations of temperature and humidity that falls within the red lines can be considered comfortable.

The HVAC industry exists because nature does not always provide these ideal conditions. HVAC systems must modify existing air conditions to bring them into a comfortable range. To accomplish this, air-conditioning systems use a combination of heating, cooling, humidification, and dehumidification processes.

These processes can be modeled on the psychrometric chart. See **Figure 27-21**. For example, Point A in the figure shows a dry-bulb temperature of 40°F and a relative humidity of 10%. The desired condition is Point B, 75°F and 50% relative humidity. The HVAC system must increase the temperature of the air by 35°F (red line) and increase the humidity by 50 grains per pound of air (blue line), which would result in a relative humidity of 50%. Plotting the air conditions at key stages in the air-conditioning process provides a good visual model of the changes that occur during the process.

A psychrometric chart can be used to plot the actions of the evaporators, heaters, and chillers in an HVAC system. Advanced psychrometrics can provide equations representing all the processes used in the conditioning of air. This gives scientists and engineers the data they need to design and evaluate new HVAC systems.

27.3 Comfort Conditions

A more technical graph showing the comfort zone is provided in **Figure 27-22**. This comfort zone represents a considerable area. However, any point in this area provides relative comfort under equal conditions of clothing and work. A room that is 75°F with a high relative humidity will feel basically the same as a room that is 80°F with a lower relative humidity. This means both rooms have the same effective temperature.

27.3.1 Effective Temperature

Effective temperature is the combined effect of dry-bulb temperature, wet-bulb temperature, and air movement that provides an equal sensation of warmth

Copyright Goodheart-Willcox Co., Inc.

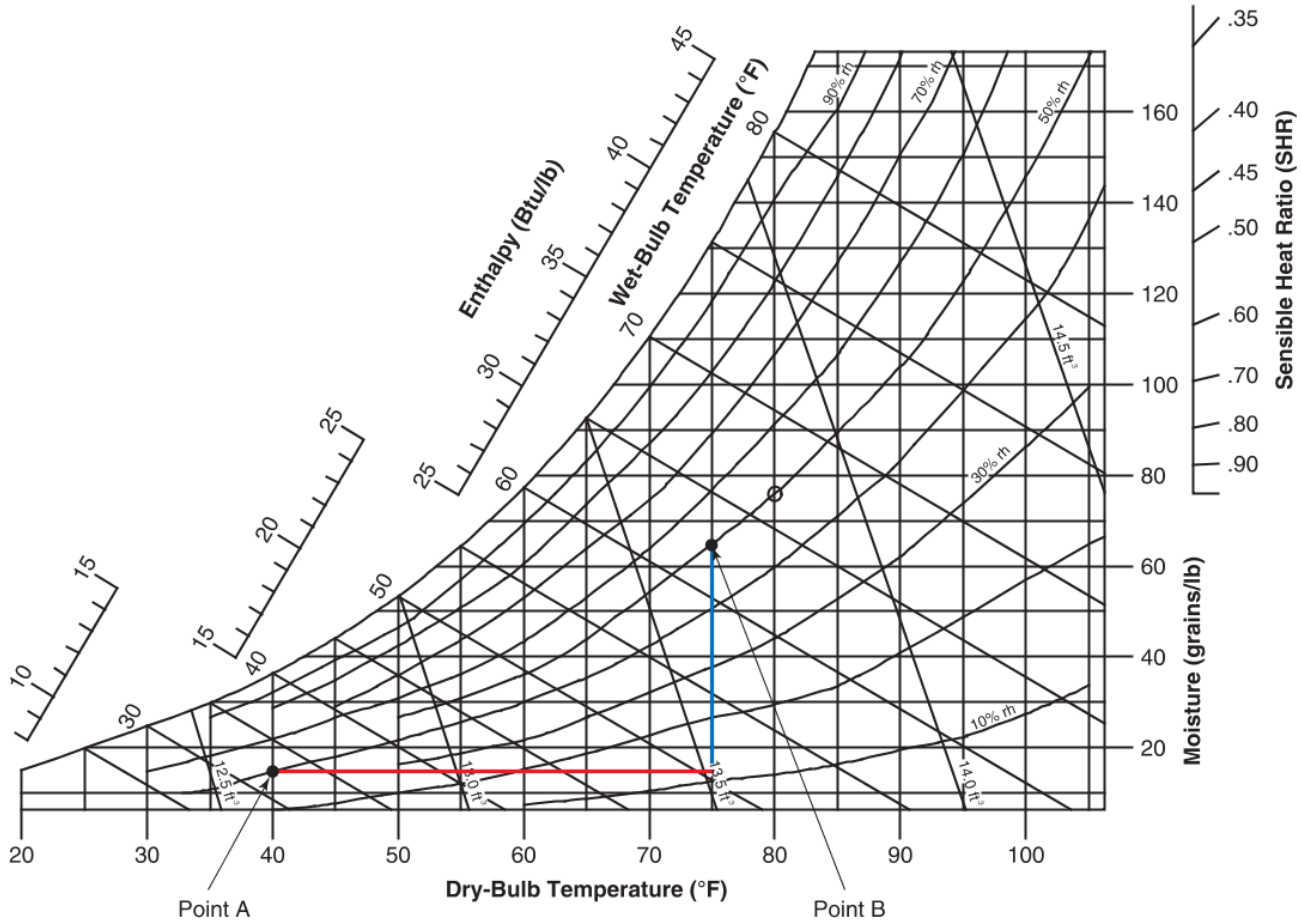

Goodheart-Willcox Publisher

Figure 27-21. If the current air conditions are represented by Point A and the desired air conditions are represented by Point B, the red line indicates how much the temperature must increase. The blue line represents the amount of moisture that must be added to the air.

9

or cold. Therefore, on a psychrometric chart, the effective temperature is the temperature at 50% relative humidity that yields the same heat loss as actual environment.

In the summertime, air conditioned buildings are usually kept at temperatures approximately 10°F to 15°F (5.6°C to 8.4°C) below the outside temperature. Some people are quite sensitive to thermal shock when entering or leaving an air conditioned space. This shock is lessened if the difference between inside and outside temperatures is reduced. Wearing a sweater or coat when indoors also reduces the shock.

The comfort range for most people varies from season to season. In summer, the comfort zone ranges between 72°F (22°C) db (dry-bulb temperature) at 90% rh up to 87°F (31°C) db at 23% rh. In winter, it is between 66°F (19°C) db at 70% rh up to 80°F (27°C) db at 20% rh.

Typically, people are most comfortable if their skin surface temperature is 91°F (33°C). This skin temperature is usually maintained in cold weather by wearing adequate clothing. In hot weather, it is maintained by the evaporation of moisture (sweat) and by heat radiation from the skin's surface.

27.3.2 Temperature-Related Illnesses

Temperature-related illnesses are called thermal disorders. In cold climates, it is possible for body temperature to drop a few degrees below normal due to lower metabolism. If body temperature drops too far below normal, hypothermia results. Hypothermia causes disorientation, numbness, loss of motor control, and eventually tissue damage, organ failure, and death.

High temperatures can also cause illness, especially if there is also high humidity. Jobs involving high air temperatures, radiant heat sources, high humidity, direct physical contact with hot objects, or strenuous physical activity have a high potential for causing heat stress. OSHA provides examples of methods to reduce heat stress hazards in the workplace. These methods include wearing light clothing, drinking one pint of

Copyright Goodheart-Willcox Co., Inc.

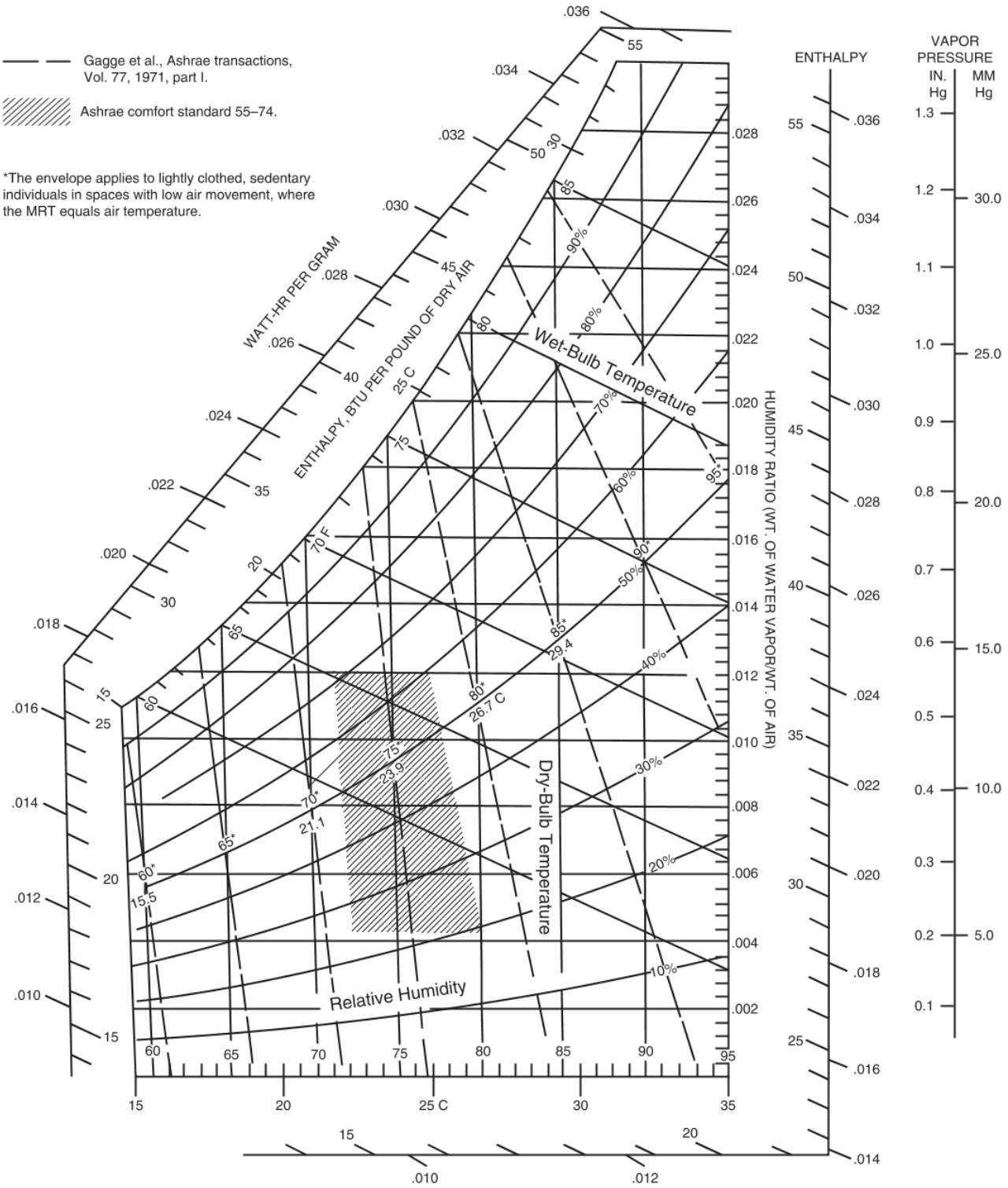

Reprinted by permission of the American Society of Heating, Refrigerating, and Air-Conditioning Engineers, Atlanta, Georgia

Figure 27-22. Graph showing the comfort zone in relation to dry-bulb temperature, wet-bulb temperature, and relative humidity line. Note that the Humidity Ratio scale on the right side of the graph list represents the ratio of water vapor to air.

Copyright Goodheart-Willcox Co., Inc.

water (preferably 50°F to 60°F) per hour, scheduling frequent rest periods in shaded or air-conditioned recovery areas, reducing the physical demands of the job, rescheduling strenuous activity to a cooler time in the day, blocking out direct sunlight and heat sources, and avoiding beverages containing alcohol or caffeine.

27.3.3 Comfort-Health Index (CHI)

The American Society of Heating, Refrigerating and Air-Conditioning Engineers (ASHRAE) recognizes a ***Comfort-Health Index***, which lists effective temperatures, the sensation associated with each temperature, and the effects that each temperature have on human physiology and health. This chart indicates that the human body attempts to adjust to very hot conditions by increasing sweating and the flow of blood. These physiological conditions may result in an increased danger of heat strokes and cardiovascular difficulty, **Figure 27-23**.

At comfortable temperatures, the chart also shows that there is no sensation of either warmth or cold. Also, there are no apparent physiological effects. Moving down in temperature to very cold conditions, the body is uncomfortable. Physiologically, the body attempts to correct this condition by shivering. In extremely cold conditions, the body attempts to maintain its core temperature by shutting down circulation to the extremities. Extreme cold can cause an increased risk of death, particularly in older people.

27.4 Air Movement

Air movement affects comfort. Cool, dry air circulated past a warm body will speed heat flow from the body. Evaporation will increase, which cools the

Comfort-Health Index

New T_{eff} Scale	Temperature Level	Comfort Range	Physiological Response	Health Effect
°C °F	Limited tolerance	Limited tolerance	Body heating Failure of regulation	Circulatory collapse
40				
100	Very hot	Very uncomfortable	Increasing stress caused by sweating and blood flow	Increasing danger of heat strokes
35	Hot			Cardiovascular embarrassment
90	Warm	Uncomfortable		
30	Slightly warm		Normal regulation by sweating and vascular change	
80				
25	Neutral	Comfortable	Regulation by vascular change	Normal health
70	Slightly cool			
20	Cool	Slightly uncomfortable	Increasing dry heat loss	
60			Urge for more clothing or exercise (behavioral reg.)	Increasing complaint from dry mucosa and skin (water vapor pressure <10 mm Hg)
15	Cold		Vasoconstriction in hands and feet	Muscular pain Impairment of peripheral circulation
10 50	Very cold	Uncomfortable	Shivering	

Adapted from the American Society of Heating, Refrigerating, and Air-Conditioning Engineers, Atlanta, Georgia, from the 1993 ASHRAE Handbook—Fundamentals

Figure 27-23. Comfort-Health Index indicating sensory, physiological, and health responses to prolonged exposure to various effective temperatures.

Copyright Goodheart-Willcox Co., Inc.

body. During cold days, a person exposed to outdoor atmospheric conditions often feels much colder than the thermometer shows. This chilling effect is due to wind velocity and relative humidity. The term *windchill* describes this uncomfortable feeling.

27.4.1 Wind

The Beaufort Scale is frequently used by the United States Weather Bureau for indicating wind velocity. It is divided into a series of levels, from zero for calm winds to twelve and above for hurricanes. Each value represents a classification of wind velocity along with descriptions of its effects. Wind velocity values and effects according to the Beaufort Scale are shown in **Figure 27-24**.

An increase in wind velocity increases the heat loss of a heated structure, thereby impacting the efficiency of a heating system. The calculated heat load for a structure should include the maximum wind velocity expected for the area.

During the winter months, the ***windchill index*** (chill factor) is used to describe the combined effect of temperature and wind speed. The windchill index chart is published and maintained by the United States Weather Bureau. The chill factor is based on both temperature and wind speed. For example, at a temperature of 0°F (–18°C) and a wind speed of 10 mph, the windchill index temperature is –16°F (–26°C), **Figure 27-25**.

People exposed to air temperatures below freezing are at risk for frostbite, which is essentially a freezing of the skin. The exposure time required for frostbite to occur gets shorter as wind speed increases or temperature decreases. In addition, the body's physiological response to the cold is to reduce blood flow to the exposed areas, causing those areas to cool even faster while reducing overall heat loss from the body's core.

Beaufort Scale of Wind Velocity

Beaufort Number	Wind Velocity		Observed Wind Effects	Terms Used in NWS Forecasts
	Mph	Knots		
0	Less than 1	Less than 1	Calm; smoke rises vertically	Light
1	1–3	1–3	Directions of wind shown by smoke drift; but not by wind vanes	
2	4–7	4–6	Wind felt on face; leaves rustle; ordinary vane moved by wind	
3	8–12	7–10	Leaves and small twigs in constant motion; wind extends light flag	Gentle
4	13–18	11–16	Raises dust and loose paper; small branches are moved	Moderate
5	19–24	17–21	Small trees in leaf begin to sway; crested wavelets form on inland waters	Fresh
6	25–31	22–27	Large branches in motion; umbrellas used with difficulty	Strong
7	32–38	28–33	Whole trees in motion; inconvenience felt walking against wind	
8	39–46	34–40	Breaks twigs off trees; generally impedes progress	Gale
9	47–54	41–47	Slight structural damage occurs; leaves and branches blown from trees	Severe Gale
10	55–63	48–55	Seldom experienced inland; trees uprooted; considerable structural damage occurs	Storm
11	64–72	56–63	Very rarely experienced; accompanied by widespread damage	
12 or Higher	73 or Higher	64 or Higher	Very rarely experienced; accompanied by widespread damage	Hurricane–Typhoon

Goodheart-Willcox Publisher

Figure 27-24. Beaufort Scale of wind velocity.

Copyright Goodheart-Willcox Co., Inc.

Windchill Chart

Wind (mph) \ Temperature (°F)	40	35	30	25	20	15	10	5	0	-5	-10	-15	-20	-25	-30	-35	-40	-45
Calm																		
5	36	31	25	19	13	7	1	-5	-11	-16	-22	-28	-34	-40	-46	-52	-57	-63
10	34	27	21	15	9	3	-4	-10	-16	-22	-28	-35	-41	-47	-53	-59	-66	-72
15	32	25	19	13	6	0	-7	-13	-19	-26	-32	-39	-45	-51	-58	-64	-71	-77
20	30	24	17	11	4	-2	-9	-15	-22	-29	-35	-42	-48	-55	-61	-68	-74	-81
25	29	23	16	9	3	-4	-11	-17	-24	-31	-37	-44	-51	-58	-64	-71	-78	-84
30	28	22	15	8	1	-5	-12	-19	-26	-33	-39	-46	-53	-60	-67	-73	-80	-87
35	28	21	14	7	0	-7	-14	-21	-27	-34	-41	-48	-55	-62	-69	-76	-82	-89
40	27	20	13	6	-1	-8	-15	-22	-29	-36	-43	-50	-57	-64	-71	-78	-84	-91
45	26	19	12	5	-2	-9	-16	-23	-30	-37	-44	-51	-58	-65	-72	-79	-86	-93
50	26	19	12	4	-3	-10	-17	-24	-31	-38	-45	-52	-60	-67	-74	-81	-88	-95
55	25	18	11	4	-3	-11	-18	-25	-32	-39	-46	-54	-61	-68	-75	-82	-89	-97
60	25	17	10	3	-4	-11	-19	-26	-33	-40	-48	-55	-62	-69	-76	-84	-91	-98

Frostbite Times: 30 minutes, 10 minutes, 5 minutes

$$\text{Windchill (°F)} = 35.74 + 0.6215T - 35.75(V^{0.16}) + 0.4275T(V^{0.16})$$

Where, T= Air Temperature (°F) V= Wind Speed (mph) Effective 11/01/01

National Weather Service

Figure 27-25. To use a Windchill Chart, find the approximate temperature on the top of the chart. Find the approximate wind speed at the left edge of the chart. The number that appears at the intersection of the temperature column and wind speed row is the windchill index.

27.4.2 Air Velocity Measurement

Outside air velocity, or wind, is measured in miles per hour (mph) or knots. Indoor air velocity is usually expressed in feet per minute (fpm). It is possible to calculate the volume of air flowing through a duct in cubic feet per minute (cfm). To do this, multiply the air velocity by the cross-sectional area of the duct.

Maintaining the proper rate of air movement in a conditioned space is very important. Air movement is necessary to supply fresh air to the space. If the air moves too fast (a draft), a person feels uncomfortable. If the air movement is too slow, the air becomes stale (contaminated) and lacks oxygen.

If air flows through an occupied space at more than 15′ to 20′ per minute (4.5 m/min to 6 m/min), occupants of the space will feel a draft. It is difficult to develop accurate instruments to measure drafts. The usual method is to use a smoke generator and a stopwatch. The flow of the smoke through the space is timed. If the smoke moves at a rate exceeding 15′ to 20′ per minute, a draft is indicated.

Several different instruments can be used to measure air velocity. The following devices are most commonly used:

- Vane anemometer
- Hot-wire anemometer
- Swinging-vane anemometer
- Manometer and pitot tube (measures velocity pressure)

Pro Tip

Measuring Air Velocity

Note that the vane anemometer, the swinging-vane anemometer, and the pitot tube are used to measure air velocity, but they are not accurate at very low air velocities.

Anemometers

Vane anemometers measure airflow velocity using a small propeller. When the propeller is placed in an airstream, it revolves as air flows past the blades. The revolution of the propeller is directly proportional to the velocity of the airstream. An electronic instrument connected to the propeller monitors the rotation of the propeller. It then calculates the distance traveled by the air based on the number of degrees the propeller rotates. Next, it divides this distance by the time elapsed and then converts the value to standard units and displays the velocity of the airflow. The electronic instrument performs these calculations many times per second and averages the results to provide an accurate reading, **Figure 27-26**.

Some anemometers include a function that allows the users to enter the cross-sectional area of the duct, which the meter then multiplies by the air velocity to determine the rate of airflow in cubic feet per minute.

To use a vane anemometer, carefully place the propeller in the airstream at a right angle to the airflow. Measurements can be taken in areas such as vents, returns, registers, and exhausts. Allow it to reach a constant speed (after about one minute), then trip the registering mechanism.

Another type of anemometer is placed over the duct grille. The technician inputs the cross-sectional area of the duct into the instrument. The LCD readout displays the airflow exiting through the grille in cubic feet per minute (cfm). With this data, the operator can calculate the number of Btus going into the space through each grille by multiplying the volume of airflow by the appropriate temperature factor, **Figure 27-27**.

A ***hot-wire anemometer*** has a small wire element often made of tungsten. Current is passed through the element to heat it. As the temperature of the element increases, so does its resistance. Airflow passing over the element cools the wire and reduces its resistance. By measuring the current draw through the element, the anemometer can calculate the velocity of airflow over the wire, **Figure 27-28**.

A ***swinging-vane anemometer*** operates on the principle that incoming air will push on a small vane, causing it to deflect at different angles as the air velocity

Copyright Goodheart-Willcox Co., Inc.

A—Mini Thermo-Anemometer

B—Heavy-Duty Vane Anemometer with Detachable Probe

Extech Instruments Corp.

Figure 27-26. Two different vane anemometers. A—Mini thermo-anemometer that has an integral vane and can measure the rate of airflow and the air temperature. It is capable of displaying air speed in multiple formats, including the Beaufort Scale, and can calculate windchill. B—Heavy-duty vane anemometer with a detachable metal vane probe. It is designed to measure airflow rate even under extreme temperature conditions.

changes, **Figure 27-29**. To measure airflow, the instrument or connections from it are put directly in the airstream. Long pitot tube probes are often used to extend the reach of the instrument in cases where it is difficult to place the instrument directly in the airstream. The tips of these tubes are placed in the airflow and divert a small column of the airflow into the meter, **Figure 27-30**.

TIF Instruments, Inc.

Figure 27-27. Anemometer that reads air velocity and automatically calculates airflow volume.

Swinging-vane anemometers are entirely mechanical. Because they have no mechanisms that are likely to spark, they are very safe in environments where electronic meters pose an explosion risk. However, as the temperature of the air being measured changes, the sensing mechanism in the instrument expands and contracts, which can throw off the instrument's readings. The instrument is calibrated for use at a temperature of 68°F (20°C). Corrections must be made if the duct temperature is not at 68°F (20°C).

Formula used to correct airflow velocity calculations for temperature deviations:

$$\text{airflow velocity in fpm} = \frac{460 + T}{460 + 68°\text{F}} \times \text{instrument reading}$$

where

T = Fahrenheit temperature of air in duct

Copyright Goodheart-Willcox Co., Inc.

Extech Instruments Corp.

Figure 27-28. A heavy-duty CFM hot-wire anemometer.

Bacharach, Inc.

Figure 27-29. A swinging-vane anemometer provides fast measurements. The instrument is held in the airstream. It is entirely mechanical, requiring no batteries or external power source.

GrayWolf Sensing Solutions, LLC

Figure 27-30. A pitot tube extension allows the technician to measure airflow velocities in ducts that are difficult to reach. This pitot tube is being used with an electronic environmental test that has an anemometer function.

9

Pitot Tube and Manometer

A ***pitot tube*** is an instrument used to measure total air pressure and static air pressure. A pitot tube is always positioned so the open end of the tube is pointed directly into the airflow, **Figure 27-31**.

Air passing through the nose of the pitot tube represents the total air pressure. The total air pressure equals

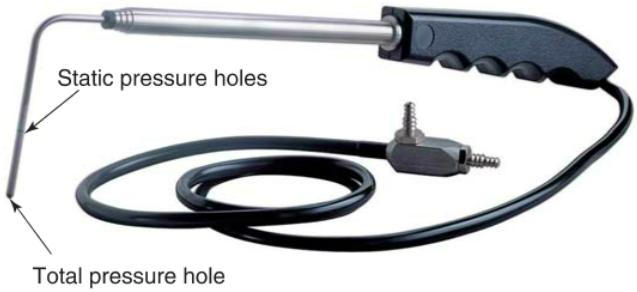

Dwyer Instruments, Inc.

Figure 27-31. Pitot tubes come in a variety of styles. This pitot tube has a handle and telescoping tubing.

Copyright Goodheart-Willcox Co., Inc.

the static air pressure plus velocity pressure. Remember that static air pressure is based on the density of the air. Velocity pressure is the force exerted by the air's movement. The outer tube, with the holes on the side, measures just the static pressure. The difference between the total pressure and the static pressure is the velocity pressure. This pressure difference is measured in inches of water. The pressure can be measured by connecting the ends of the pitot tube to the ends of a manometer. This technique is typically used for measuring air pressures inside of ductwork, **Figure 27-32**.

If the air is in motion, the total pressure is always greater than the static pressure. This pushes the fluid in the manometer toward the static pressure side. At first glance, the concept of velocity pressure may seem to violate Bernoulli's principle. However, velocity pressure is measured by bringing the airflow to a stop inside the manometer. The still air inside the manometer is pressurized as additional air tries to enter the pitot tube, compressing the air that is already there. The faster the air is moving, the more air tries to squeeze into the tube, and the more it pressurizes the air that is already inside. In other words, the velocity pressure is exerted when the airflow is slowed or stopped, not when it is moving without resistance through the duct. See **Figure 27-33**.

Formula for using velocity pressure to calculate velocity:

Velocity (V) = Velocity conversion factor × Square root of velocity pressure in inches of water (P_v)

where

Velocity conversion factor = 4005 (for standard conditions)

$$V = 4005\sqrt{P_v}$$

Example:

If the velocity pressure is 1″ of water, what is the velocity?

Solution:

$$V = 4005\,(\sqrt{1''})$$
$$= 4005 \times 1$$
$$= 4005 \text{ ft/min}$$

Example:

If the velocity pressure is 0.25″ of water, what is the velocity?

Solution:

$$V = 4005 \text{ ft/min}\,(\sqrt{0.25''})$$
$$= 4005 \text{ ft/min} \times 0.5$$
$$= 2002.5 \text{ ft/min}$$

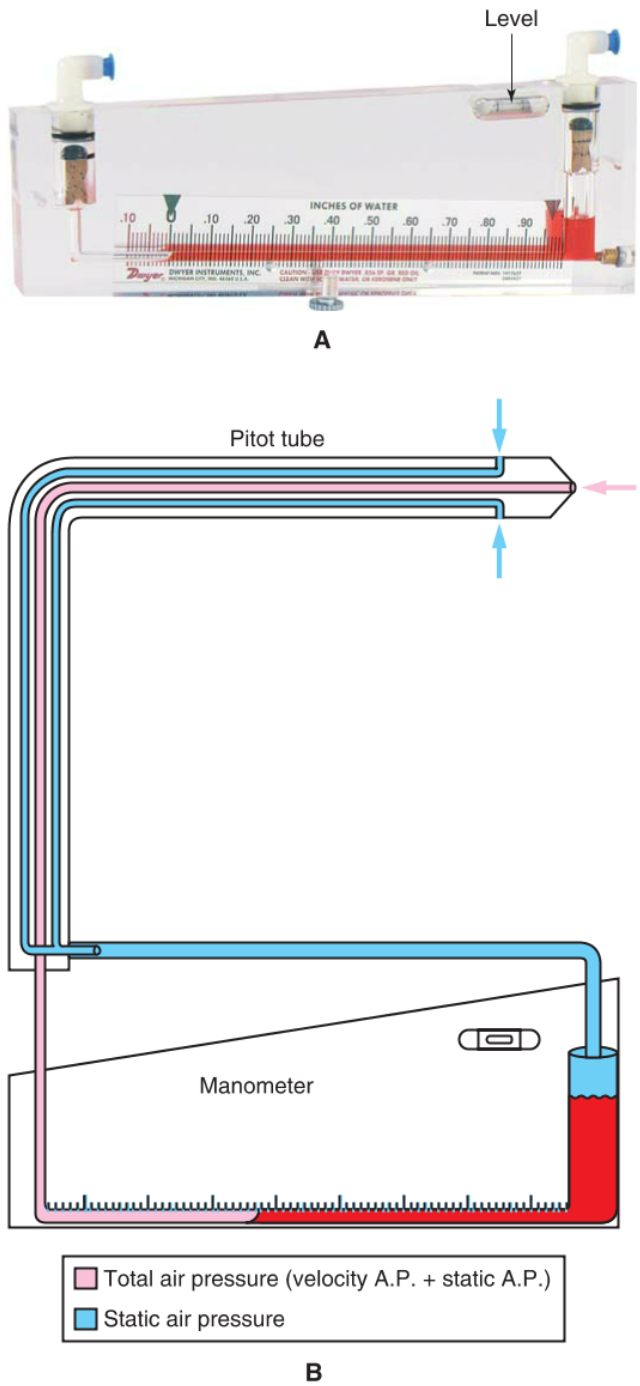

Dwyer Instruments, Inc.

Figure 27-32. An inclined manometer is used with a pitot tube to measure air velocity pressure, which can then be used to calculate air velocity. A—A typical inclined manometer. Note the level on the upper right. The manometer must be level to provide an accurate reading. B—A drawing of a pitot tube connected to an inclined manometer.

Copyright Goodheart-Willcox Co., Inc.

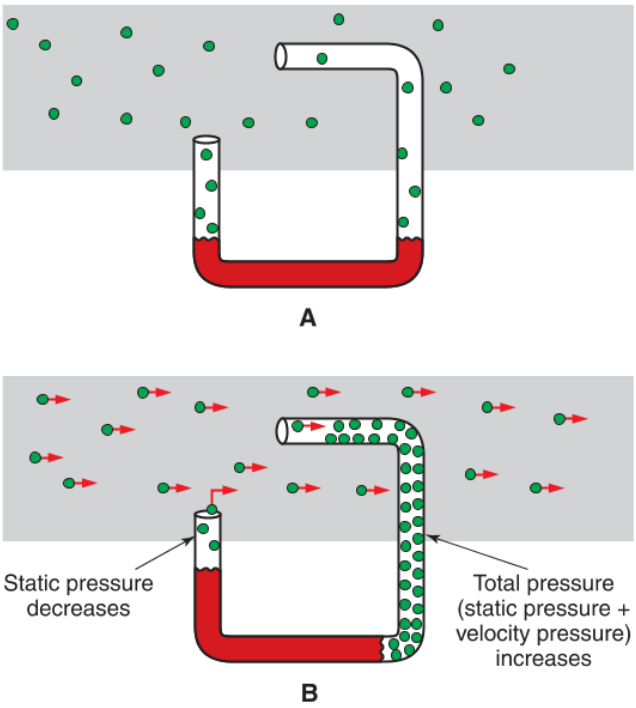

Goodheart-Willcox Publisher

Figure 27-33. Velocity pressure. A—With no airflow, the pressure on both sides of the pitot tube is equalized. B—When the air is moving, static pressure is reduced. Pressure on the right side of the tube is increased due to velocity pressure.

The conversion factor of 4005 shown in the equations is accurate for standard conditions. However, the velocity conversion factor changes based on the specific volume (density) of the air. You can find the specific volume for any set of conditions by using a psychrometric chart. You can then cross-reference the specific volume with the conversion factors listed in a chart such as the one shown in **Figure 27-34**.

To obtain correct velocity readings, take several readings in various parts of the duct and then average the readings. The American Society of Heating, Refrigerating and Air-Conditioning Engineers (ASHRAE) has determined a recommended pattern of testing location points for measuring pressure in both rectangular and circular ducts as shown in **Figure 27-35**.

Turbulent airflow can affect the ability of a pitot tube to accurately measure pressures. A pitot tube should be used only where the duct is very long. The length of the duct downstream of the measuring location should be a minimum of 10 times the duct diameter. If precise measurements are required, air straightening vanes should be located upstream from the pitot tube.

Velocity Conversion Factors	
Specific Volume (ft^3/lb)*	Velocity Conversion Factor
11.5	3720
12.1	3818
13.2	3980
13.4**	4005
14.1	4118
15.1	4260
16.2	4410
17.1	4530

*Values for any conditions may be read from the psychrometric chart.

**Standard

Goodheart-Willcox Publisher

Figure 27-34. The velocity conversion factor changes with change in air density (effect of temperature, humidity, and altitude).

27.4.3 Ventilation

Ventilation is a term applied to changing the air in a building. In any space occupied by people, breathing reduces the oxygen content. Activities in the space may add some pollutants to the environment. The most economical way to maintain health and comfort conditions is by replacing the air. This is done by bringing in outside air to ventilate the space.

Sometimes it is desirable to quickly replace all the air in the confined space. This is done by opening windows and doors, flushing the space completely with 100% outside air.

Most heating systems provide continual replacement of air. A small percent of the air in the conditioned space is continually replaced. This is done by slowly exhausting some of the air and bringing in fresh air from outside. In homes, the gradual change may not be noticeable. There is always a small amount of air entering and leaving the home. This movement of air occurs through the cracks around windows and doors. It also takes place through doorways each time doors are opened.

Some building materials are porous (contain many tiny holes). Thus, a large amount of air may filter in and out of a building. The amount of infiltration depends on the wind velocity and temperature difference between the inside and the outside of the building. Air tends to enter the building on the upwind side and leave the building on the downwind side.

Since warm air is lighter than cold air, it tends to rise in a room. In buildings with more than one story,

Copyright Goodheart-Willcox Co., Inc.

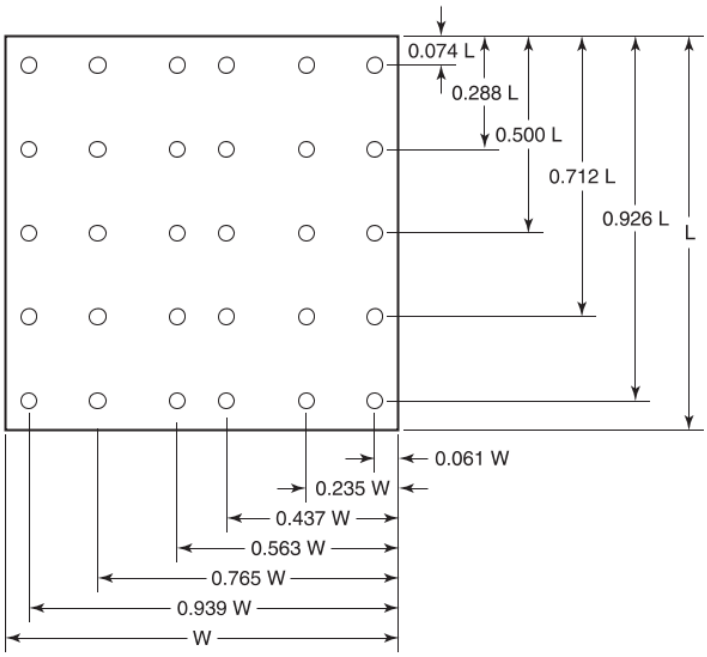

Rectangular Duct with Five and Six Locations

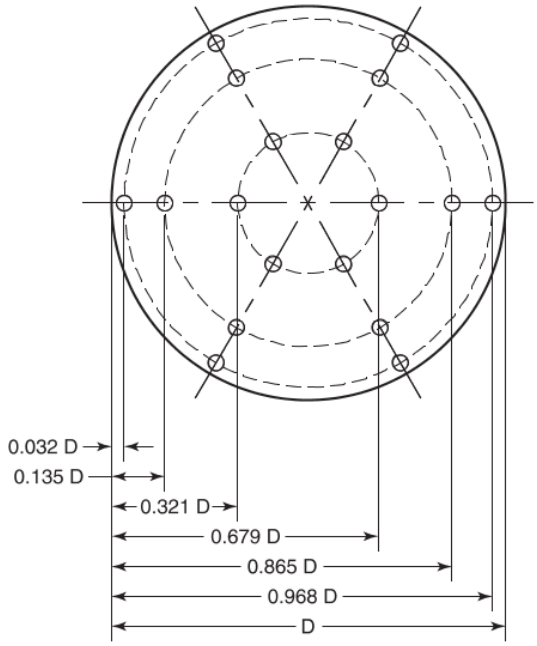

Circular Duct with Six Locations

Air Velocity Reading Locations—Rectangular Duct	
No. of Points Across Duct	**Position Relative to Inner Wall**
5	0.074, 0.238, 0.500, 0.712, 0.926
6	0.061, 0.235, 0.437, 0.563, 0.765, 0.939
7	0.053, 0.203, 0.366, 0.500, 0.634, 0.797, 0.947

Air Velocity Reading Locations—Circular Duct	
No. of Points Across Duct	**Position Relative to Inner Wall**
6	0.032, 0.135, 0.321, 0.679, 0.865, 0.968
8	0.021, 0.117, 0.184, 0.345, 0.655, 0.816, 0.883, 0.981
10	0.019, 0.077, 0.153, 0.217, 0.361, 0.639, 0.783, 0.847, 0.923, 0.961

Adapted from the American Society of Heating, Refrigerating and Air-Conditioning Engineers, Atlanta, Georgia, from the 1993 ASHRAE Handbook—Fundamentals

Figure 27-35. Rectangular and circular duct cross-sections identifying the recommended locations for measuring pressure in a duct. An average of the readings will produce average duct velocity.

the warm air rises from the lower floors to the upper floors. The rising air slightly raises the pressure in the upper areas of the house and slightly lowers the pressure in the bottom parts of the house. The increased pressure causes some warm air to escape through the upper surfaces of the building. This lost air is replaced by cold air, which enters at the lower levels because of the reduced pressure there. See **Figure 27-36A**.

During the summer cooling season, the opposite situation occurs. Cold air tends to flow downward and may leave the building at the lower levels. The cold air is replaced by warmer air entering at the upper levels. See **Figure 27-36B**.

Whenever air is exhausted from a space, it must be replaced. The air brought in from outdoors should be cleaned and adjusted to have the same temperature as the indoor air. Replaced air is conditioned to provide a comfortable room environment. This conditioned air brought into the room is called make-up air.

Copyright Goodheart-Willcox Co., Inc.

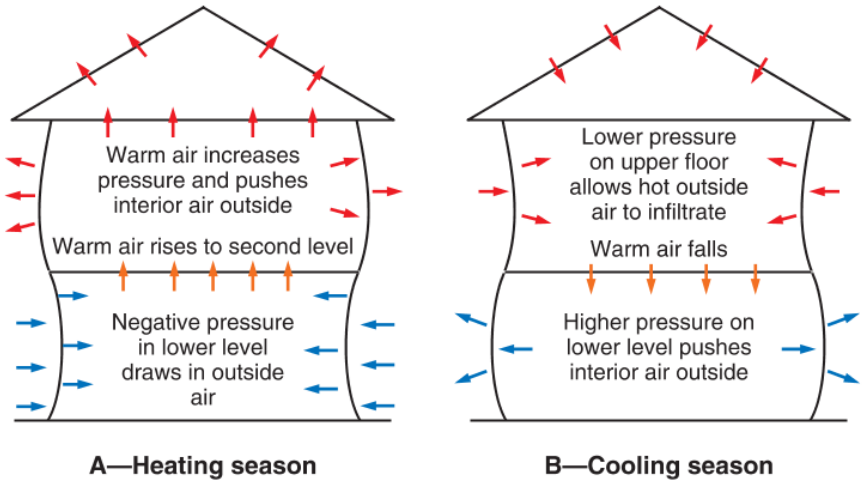

Goodheart-Willcox Publisher

Figure 27-36. Indoor airflow is affected by the differences between density and temperature of indoor and outdoor air. A—Heating season. B—Cooling season.

Thinking Green

Make-Up Air

In some buildings, one area of the building may require localized exhaust because of poor air quality while the other areas of the building remain relatively clean. For the dirtier areas, it may be more energy efficient to supply make-up air from clean, air-conditioned spaces of the building than to bring in outdoor air and condition it.

A structure that keeps inside air pressure slightly above atmospheric pressure has a positive pressure. A structure that maintains an air pressure slightly below atmospheric pressure has a negative pressure. Depending on stratification and airflow through a building, upper rooms in tall, heated structures may be slightly above atmospheric pressure. The lower rooms may be slightly below atmospheric pressure because warm air rises.

The process of combustion requires oxygen from the air, which can reduce its oxygen content. The operation of fuel-burning furnaces, stoves, water heaters, and fireplaces tend to cause a negative pressure, as it takes in fresh air for combustion and exhausts it out of the building. The negative pressure resulting from this could cause a considerable amount of air leakage into the house through the walls and cracks. To maintain positive pressure, use dedicated ductwork and a fan or blower of some kind to bring in fresh air, **Figure 27-37**.

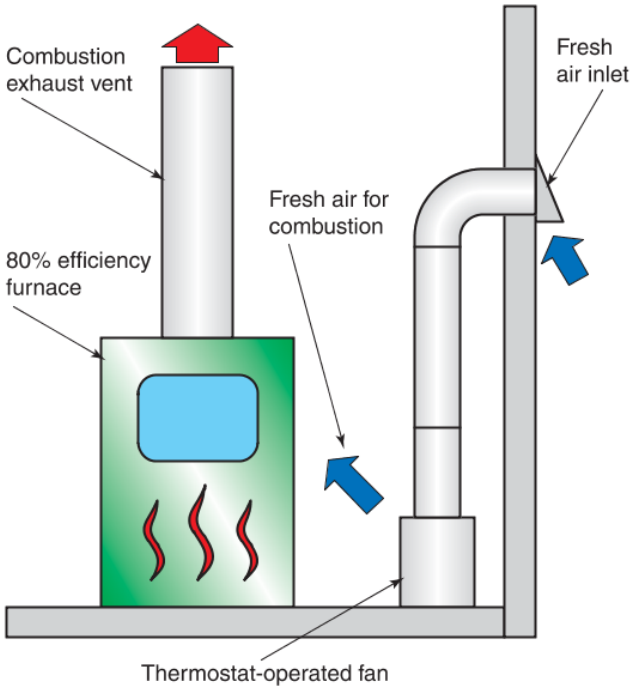

Goodheart-Willcox Publisher

Figure 27-37. This thermostat-operated fan turns on whenever the furnace turns on. It draws in air from outdoors to provide fresh air for combustion. This helps to keep the furnace operating at high efficiency and prevents the building from having negative pressure.

27.4.4 Stratification

If there is no air movement within a room, the air may tend to settle into layers of differing temperatures. Cold air will sink to the floor, and the warmer air will rise to the ceiling. This will result in a gradual difference in air temperature from the floor to the ceiling, which is known as ***stratification***, **Figure 27-38**.

Copyright Goodheart-Willcox Co., Inc.

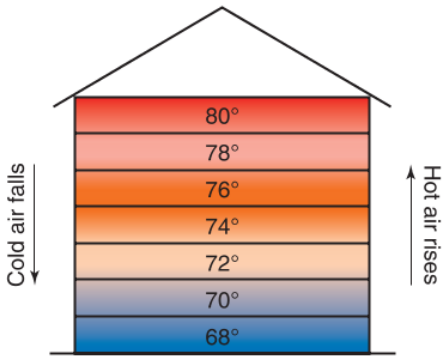

Goodheart-Willcox Publisher

Figure 27-38. Stratification occurs in rooms with little air movement. Warm air rises to the top of the room, while heavy colder air falls to the bottom of the room.

Stratification tends to make smoke haze hover in layers. The layers make it difficult to get rid of smoke. Because of stratification, if a thermostat is located in the upper part of a room with no air movement, the temperature difference between the thermostat setting and the air the occupants feel will be more noticeable. A certain amount of air movement is needed in the room to prevent stratification.

27.5 Factors Affecting Indoor Air Conditions

The temperature and humidity levels in a conditioned space can be affected by the materials inside and surrounding the conditioned space. Appliances and other electrical devices generate heat. Dark objects absorb sunlight during the day and release it at night when the temperature falls. Plumbing fixtures and potted plants can add humidity to the air.

Heat and humidity can be transferred into or out of the conditioned space through windows or poorly insulated walls. Different building materials and techniques result in different rates of heat transfer. In the summertime, heat from outdoors tends to migrate through the walls, windows, doors, ceilings, and floors into the house. In the winter, heat from inside the house tends to transfer to the outside. Proper insulating materials and weatherproofing techniques can minimize heat transfer.

27.5.1 Sun Heat Loads

Radiant heat (light) from the sun furnishes a tremendous amount of heat energy. If a glassed-in surface is exposed to this light energy, the energy will enter a space and become heat. Glass is a rather poor conductor of heat. However, it freely allows light to pass through it. In this way, energy that enters a building as a light ray becomes trapped in the room as heat.

The surfaces of buildings exposed to sunlight are also heated by the sun's rays. This heat source must be considered when calculating the heating and cooling requirements of air-conditioning systems. Many building materials are poor conductors of heat. Because of this, there is a lag or delay between the time the radiant heat energy strikes the building surface and the time the heat enters the conditioned space.

Color has a considerable effect on the amount of heat absorbed from the sun's rays. Black and red absorb much more heat than white and yellow. Likewise, surfaces designed to radiate heat are much more efficient if they are painted with dark rather than light colors. Light-reflecting surfaces, such as polished metal, chrome, and nickel plate, do not absorb heat easily and do not radiate heat efficiently from their surfaces.

27.5.2 Heat Sinks

A warm body radiates heat rays. When heat rays strike another surface, there are two common effects:

- Heat rays that strike another surface of the same temperature will reflect back. There is no increase or decrease in heat in the body being struck by the radiation. Imagine that a body giving off heat rays is totally surrounded by a surface at the same temperature as that body. Then all the surfaces, including the central body, receive back as much radiation as they give off. All the surfaces and the central object remain at the original temperature.
- If radiant heat strikes a surface colder than the radiating body, the heat rays do not all bounce back. Some of the radiant heat is absorbed into the colder surface. This surface becomes what is called a ***heat sink***.

On cold days, heat flows from a heated room to a cold window surface. A person sitting close to a window under such conditions will feel cold. This is due to the loss of some of their heat into the heat sink. The same will also be true if the walls of the room are not well insulated. If the walls are cold, they become a heat sink.

27.5.3 Vapor Barriers

Water vapor flows easily through all porous substances. Water in vapor form remains a vapor as long

Copyright Goodheart-Willcox Co., Inc.

as its temperature is above the dew point. However, when its temperature drops to the dew point, the water vapor condenses into droplets.

In modern housing, water vapor is kept from passing through walls and toward surfaces where it might condense. This is done by using moisture-proof materials, such as aluminum foil and plastic sheeting, to form a vapor barrier. The barrier keeps water vapor from passing from warm surfaces to cold surfaces. Vapor barriers should always be installed on the warm side of a heated space.

Lack of proper vapor barriers is often indicated by peeling paint near kitchen and bathroom areas. The moisture from these areas travels through the walls. When it contacts the cold undersurface of the paint, droplets of water are formed, causing the paint to peel.

27.5.4 Heat Insulation

In extremely hot or cold climates, it is desirable to use materials that do not transfer heat readily. Reducing heat conductivity helps maintain desired air-conditioning temperatures more economically. Usually, spaces in the structure can be filled with insulating material to help prevent the flow of heat through the structure. Modern buildings are usually insulated with mineral wool, expanded mica, balsam wool, urethane, and sometimes cork in either sheet or granular form.

Copyright Goodheart-Willcox Co., Inc.

Chapter Review

Summary

- Weather describes atmospheric conditions. In reference to outdoor conditions, the term *climate* refers to the long term weather trends for a region. In reference to indoor conditions, it describes the typical conditions maintained in the space.
- Air-conditioning systems simultaneously control temperature, filter airflow, and adjust humidity to maintain desired conditions inside a space.
- The atmosphere, or air that surrounds the earth, is composed of several distinct layers. Air is composed mostly of nitrogen, oxygen, argon, and carbon dioxide, with other gases present in smaller quantities. Air exerts a pressure on everything it surrounds. At sea level, the pressure (atmospheric pressure) is 14.7 psia (101 kPa) at a temperature of 69.8°F (21°C).
- Humidity is the moisture vapor contained in air. The quantity of humidity in the air affects evaporation rates. Drier air results in more rapid evaporation, which in turn provides more cooling effect. Air at a given temperature can hold only a certain amount of moisture. The warmer the air is, the more moisture it can hold.
- Relative humidity is the expression of the quantity of moisture in air compared to the maximum amount of moisture the air can hold at the current temperature. Relative humidity is usually expressed as a percentage.
- Dew point is the temperature at which the current amount of moisture in the air would result in complete saturation of the air (100% relative humidity). At dew point, moisture in the air begins to condense.
- A hygrometer is an instrument that measures moisture in the air. Palm-held electronic hygrometers can use the power of mobile devices and PCs to display, record, document, annotate, and report measurements. These units typically can measure relative humidity, temperature, dew point, wet-bulb temperature, and more.
- Air temperature can be expressed as a dry-bulb temperature or a wet-bulb temperature. A dry-bulb temperature is a measurement of the air's temperature without adjusting for the effect of humidity. Wet-bulb temperature is a measurement of the air's temperature that is adjusted for the effect of the air's humidity on evaporative cooling.
- Psychrometry is the science studying the thermodynamic properties of air and water vapor. Psychrometers measure dry-bulb and wet-bulb temperature and are used to determine the relative humidity in the air. Psychrometric charts are a graph of the interrelationships between dry-bulb temperature, wet-bulb temperature, specific humidity, relative humidity, specific volume, dew point, and enthalpy in air mixtures. A technician that knows any two of these values can use a psychrometric chart to look up the others. Each stage in an air-conditioning process can be plotted on the chart so the technician can see the demands placed on the system.
- A wide range of temperature and humidity combinations provide a comfortable environment for humans. People perceive different combinations of humidity, airflow, and temperature as equivalents. This perceived temperature is called effective temperature. The Comfort-Health Index lists different effective temperatures and the physiological responses to those temperatures.
- Air movement affects comfort. Cool, dry air circulated past a warm body will speed heat loss from a body. Evaporation will increase, which cools the body. The chilling effect due to wind velocity and relative humidity is referred to as windchill.
- Indoor airflow must be great enough to provide effective ventilation and prevent temperature stratification, but must not be so strong that it makes the space feel drafty. Ventilation in the form of make-up air is necessary to maintain oxygen levels, minimize or eliminate negative pressure in a building, and provide combustion air for fuel-burning appliances, such as gas furnaces, stoves, water heaters, and ovens.
- Various types of anemometers are used to measure air velocity. A pitot tube is an instrument that measures total air pressure and static air pressure. The difference between the total pressure and the static pressure is the velocity pressure.
- Indoor air conditions can also be affected by sun loads, heat sinks, and heat and humidity migration. Vapor barriers prevent infiltration of moisture into a building, and heat insulation reduces heat transfer between indoors and outdoors.

Copyright Goodheart-Willcox Co., Inc.

Review Questions

Answer the following questions using the information in this chapter.

1. The conditions that are normally maintained in an indoor space are referred to as its _____.
   A. climate
   B. effective temperature
   C. psychrometry
   D. weather
2. According to ASHRAE, the process of treating air so as to control simultaneously temperature, humidity, cleanliness, and distribution is called _____.
   A. air conditioning
   B. dew pointing
   C. heat sinking
   D. ventilation
3. Earth's atmosphere contains about 23% _____ by weight.
   A. argon
   B. nitrogen
   C. oxygen
   D. sulfur dioxide
4. When air temperature reaches 100% relative humidity, it is at its _____ point.
   A. desiccant
   B. dew
   C. hygrometric
   D. wet-bulb
5. Air with 75% relative humidity contains _____ of the moisture it is capable of holding.
   A. one-fourth
   B. one-half
   C. two-thirds
   D. three-fourths
6. Starting at sea level and rising higher in altitude through the troposphere, atmospheric pressure _____.
   A. drops
   B. remains the same
   C. rises
   D. weighs more
7. A hygrometer is an instrument that measures _____.
   A. air pressure
   B. enthalpy
   C. moisture in the air
   D. wet-bulb temperature
8. Degree day calculations are based on a temperature of _____.
   A. 32°F (0°C)
   B. 50°F (10°C)
   C. 65°F (18°C)
   D. 98.6°F (36°C)
9. The science of studying the thermodynamic properties of air and water vapor is called _____.
   A. stratification
   B. hygrometry
   C. enthalpy
   D. psychrometry
10. The Beaufort scale _____.
    A. lists windchill factors
    B. indicates levels of wind velocity
    C. is a psychrometric chart
    D. lists average daily heating and cooling demands for a period of time
11. Which of the following instruments is used to measure air velocity?
    A. Psychrometer.
    B. Chilled mirror hygrometer.
    C. Anemometer.
    D. All of the above.
12. Which type of anemometer is entirely mechanical?
    A. Vane anemometer.
    B. Swinging-vane anemometer.
    C. Hot-wire anemometer.
    D. None of the above.
13. Changing the air in a building is called _____.
    A. stratification
    B. desiccation
    C. ventilation
    D. None of the above.
14. For a building to maintain positive pressure with various fuel-burning appliances operating, a(n) _____ should be used.
    A. fan or blower
    B. heat sink
    C. psychrometer
    D. swinging-vane anemometer
15. When radiant heat strikes a surface that is colder than the radiating body, _____.
    A. some of the radiant heat is absorbed into the colder surface
    B. the heat rays will reflect back
    C. the radiating body becomes a heat sink
    D. Both A and C.

Copyright Goodheart-Willcox Co., Inc.

CHAPTER 28 Air Quality

Learning Objectives

Information in this chapter will enable you to:

- Identify the agencies and standards that regulate indoor air quality.
- Categorize indoor air pollutants as solid or gas pollutants and provide examples of each.
- Recall the factors that affect indoor air quality.
- Recognize the main sources of pollutants that adversely affect residential and commercial indoor air quality.
- Summarize the processes used to assess residential and commercial indoor air quality.
- Summarize the steps that can be taken to prevent indoor air quality problems.
- Differentiate between sick building syndrome, building-related illness, and multiple-chemical sensitivity.
- Compare the different types of air filters available.
- Summarize the different air cleaning methods used to improve indoor air quality.
- Explain the operation and maintenance of ultraviolet air treatment system.
- Differentiate between heat recovery ventilators (HRVs) and energy recovery ventilators (ERVs).

Chapter Outline

28.1 Indoor Air Quality Standards and Guidelines
28.2 Air Pollutants
28.2.1 Solid Pollutants
28.2.2 Gaseous Pollutants
28.3 Indoor Air Quality
28.3.1 Residential Indoor Air Quality
28.3.2 Indoor Air Quality in a Commercial Setting
28.3.3 Preventing IAQ Problems
28.3.4 Classifications of Indoor Air Quality Issues
28.4 Air Cleaning
28.4.1 Air Filters
28.4.2 Electronic Air Cleaners
28.4.3 Ionizing Air Purifiers
28.4.4 Ultraviolet Light
28.5 Indoor Air Quality Systems

Technical Terms

air filter
asbestos
atmospheric dust spot efficiency
bacteria
bioaerosols
building-related illness (BRI)
carbon dioxide (CO_2)
carbon monoxide (CO)
DOP HEPAP Method
dust
electronic air cleaner
energy recovery ventilator (ERV)
exfiltration
fractional efficiency test
fumes
heat recovery ventilator (HRV)
indoor air quality (IAQ)
infiltration
Legionnaires' disease
MERV (Minimum Efficiency Reporting Value)
mold
multiple chemical sensitivity (MCS)
nitrogen oxide (NO_X)
ozone (O_3)
pollen
pollen count
pollutant
radon (Rn)
sick building syndrome (SBS)
smoke
sulfur dioxide (SO_2)
synthetic dust weight arrestance
UVG

Review of Key Concepts

Reviewing these concepts from earlier chapters will help you understand new concepts presented in this chapter:

- When an atom has an imbalance of electrons and protons, it is ionized. If an atom has more electrons than protons, it is a negatively charged ion. If an atom has more protons than electrons, it is a positively charged ion. (Chapter 12)
- There are two kinds of static charges—positive and negative. An object with a negative charge has accumulated more electrons than protons, and an object with a positive charge has more protons than electrons. (Chapter 12)
- Objects with the same kind of charge repel each other. Objects with different charges attract each other. (Chapter 12)
- In any space occupied by people, activities in the space may add some pollutants to the environment. The most economical way to maintain health and comfort conditions is by replacing the air. This is done by bringing in outside air to ventilate the space. (Chapter 27)

Introduction

A good air-conditioning system delivers clean air to the space being conditioned. Air quality control includes more than just the removal of contaminants. ***Indoor air quality (IAQ)*** includes the status of indoor air as measured by temperature, humidity, fresh airflow, pollutants, and chemicals in an enclosed space.

9

Video

- Indoor Air Quality

28.1 Indoor Air Quality Standards and Guidelines

ASHRAE Standard 62 is a widely recognized standard relating to indoor air quality. ASHRAE Standard 62 offers equipment and system requirements, as well as minimum ventilation rates, which should result in indoor air quality that would be acceptable to human occupants. Standard 62 establishes the IAQ-related standard for the design, construction, startup, operation, and maintenance of ventilation systems used in commercial structures.

Standard 62.1 ties ventilation rates to the number of occupants in a given space. For example, the rate for office space where smoking is not allowed is 20 cubic feet per minute (cfm) per person.

Code Alert

IAQ Standards

The National Institute for Occupational Safety and Health (NIOSH) has developed specific criteria and exposure limits for pollutants. The Occupational Safety and Health Administration (OSHA) also sets permissible exposure limits (PELs) for hazardous substances.

28.2 Air Pollutants

A ***pollutant*** is a substance that is in some way a detriment to comfort, health, and a desirable environment. The Federal Clean Air Act of 1970 gave the Environmental Protection Agency the power to establish and enforce standards for clean air.

Three common indoor air pollutants are asbestos, bioaerosols, and radon. Asbestos was often used in the past as a form of insulation. Bioaerosols are airborne microorganisms that breed in humid conditions. Radon is a naturally occurring gas that has been found to cause cancer. Asbestos, bioaerosols, and radon will be discussed further below.

28.2.1 Solid Pollutants

Solid air pollutants are particles of various sizes that are suspended by air currents. They are classified into the following general groups: dust, fumes, smoke, bioaerosols, and asbestos, **Figure 28-1**.

Dust

The term ***dust*** refers to the small particles that become temporarily airborne from wind, a sudden earth disturbance, or mechanical work on a solid. The origin of dust can be animal, vegetable, or mineral. Dust particles are usually 1–200 microns in size.

Fumes

Fumes are small, solid particulates suspended in the air. They form by the condensation and solidification of gaseous materials. These materials ordinarily are solids but have been put into a gaseous state, usually by an industrial or chemical process. These particles are about 1 micron in size.

Smoke

Smoke is composed of solid particles carried into the atmosphere by gaseous products of incomplete combustion. Particles vary in size from 0.1 to 13 microns.

Bioaerosols

Bioaerosols are airborne microorganisms, such as viruses, bacteria, fungi, protozoa, mold, rust, dust mites, mildew, and yeasts. They are found both indoors and outdoors. Excessive moisture indoors increases the growth of some microorganisms.

Certain types of humidifiers, water spray systems, and wet porous surfaces act as breeding grounds for the microorganisms found in bioaerosols. For instance, humidifiers kept at a lukewarm temperature may provide an excellent breeding place for bacteria. Also, surfaces of dehumidifiers may become breeding places for bacteria and fungi. These surfaces should be

Comparative Micron Sizes	Examples of Typical Contaminants
10+ microns	Heavy atmospheric dust Ash Particles visible to the naked eye
5–10 microns	Average atmospheric dust Pollen Mold
1–5 microns	Light atmospheric dust Bacteria Pollen
0.3–1 microns	Oil fumes and smoke Bacteria Suspended dust particles

Goodheart-Willcox Publisher

Figure 28-1. Relative sizes of common air contaminants.

Copyright Goodheart-Willcox Co., Inc.

sterilized from time to time to maintain a safe operating condition.

Bacteria

Bacteria are simple, single-cell microorganisms that are responsible for the transfer of many diseases. Many manufacturing processes, health care environments, and food service environments require the removal of bacteria. Several techniques can be used to control bacteria.

The FDA recommends the use of one teaspoon of chlorine bleach to one quart of water to disinfect home surfaces, such as counters, that may be contaminated by bacteria. Use bleach with caution, since it may discolor some surfaces. Studies have shown that a high water heater temperature of at least 140°F (60°C) is effective in controlling Legionella bacteria in single-family residences.

Mold

Mold is a growth of minute fungi that forms on vegetable and animal matter. Many typical air conditioning applications provide a favorable environment for their growth and development. This is particularly true if moisture is present. The spores from certain molds can cause illness.

Pollen

The term ***pollen*** refers to the small particles released by plants as part of their reproductive cycle. During certain seasons, plants (most notably ragweed, timothy grass, goldenrod, and roses) release pollen grains into the atmosphere, creating irritating symptoms and ailments for many people. These ailments include hay fever, rose fever, and other respiratory difficulties. For this reason, removal of pollen from the air is an important function of air conditioning. Pollen grains vary in size from 10 to 100 microns.

A ***pollen count*** is a measurement of the amount of pollen in a given space. The amount of pollen can be measured by exposing an adhesive-coated surface to the atmosphere for 24 hours. The number of pollen grains in a square centimeter determines the pollen count for the previous 24 hours.

Asbestos

Asbestos is a naturally occurring mineral that forms fiber bundles. It is known for its strength and fire resistance. It was once used in the construction of commercial buildings, such as in furnace insulation materials, tiles, and in various coatings. Exposure to asbestos normally occurs in four settings: during acquisition (mining), manufacturing (insulation, brake linings), installation, and removal. Sampling for asbestos is accomplished through environmental monitoring, including visual assessment and, if needed, bulk sampling.

Safety Note

Asbestos

Asbestos is a carcinogen (cancer-causing agent). Breathing asbestos fibers can also cause serious lung diseases, such as asbestosis, which may result in loss of lung function, disability, and even death. Removal of asbestos should only be done by professional asbestos abatement companies.

28.2.2 Gaseous Pollutants

Common gaseous pollutants include carbon monoxide (CO), carbon dioxide (CO_2), sulfur dioxide (SO_2), photochemical oxidants, and nitrogen oxides (NO_X). Photochemical oxidants result from the effect of sunlight on hydrocarbons and nitrogen oxides. They react and produce smog. Terpene, a hydrocarbon released from growing trees, is sometimes considered a pollutant, as is methane, which is produced by the decomposition of vegetable matter.

In addition to the pollutants already mentioned, chlorine, paints, insecticides, and volatile solvents release polluting vapors. Many vapor-caused illnesses are difficult to identify. However, illnesses often disappear after patients are removed from the polluted environments.

9

Sulfur-Based Gaseous Pollutants

Sulfur dioxide (SO_2) is a common gaseous pollutant. It is produced by burning coal, gas, or oil. Hydrogen sulfide results from some industrial processes, particularly papermaking. Depending on the makeup of these gases, they may contain carcinogens, which are harmful to human health.

Carbon Monoxide (CO)

Carbon monoxide (CO) is a deadly poison. It is an odorless, colorless gas that leaves a metallic taste in the mouth. Carbon monoxide replaces the oxygen in red blood cells. Health effects from exposure to carbon monoxide are shown in **Figure 28-2**.

Carbon monoxide is produced by the incomplete combustion of fuel. A common source is automobile engine exhaust. Fuel-burning furnaces also produce carbon monoxide. It is present in the combustion chamber, heat exchanger, flue, and stack. Carbon monoxide may be found inside homes or offices due to poorly vented combustion appliances, faulty chimneys, or cracked heat exchangers.

Copyright Goodheart-Willcox Co., Inc.

Effects of Carbon Monoxide Exposure	
Parts Per Million (ppm)	**Health Effects**
200–400	Slight headache
1000–2000	Heart palpitations (within .5 hours of exposure)
1000–2000	Staggering (within 1.5 hours of exposure)
1000–2000	Mental confusion, headache, nausea, and vomiting (after 2 hours of exposure)
2000–2500	Unconsciousness (within .5 hours)
2500	Collapse; death will occur prior to any warning symptoms

Goodheart-Willcox Publisher

Figure 28-2. Breathing carbon monoxide can result in unconsciousness and death.

Carbon Dioxide (CO_2)

Carbon dioxide (CO_2) is a gaseous, nontoxic combination of carbon and oxygen that results from combustion and respiration. The concentration of CO_2 in exhaled breath is fairly constant, approximately 3.8%. Once the CO_2 leaves the mouth, it mixes with the surrounding air.

When people exhale CO_2, they also exhale other gases, odors, bacteria, and viruses. When these build up in a space due to poor ventilation, poor air quality results. When this occurs, occupants often complain of fatigue, headaches, and general discomfort. Carbon dioxide (CO_2) does not create these symptoms. However, high CO_2 concentrations indicate that these other pollutants may also be present.

Nitrogen Oxide (NO_X)

Nitrogen and oxygen atoms combine to form ***nitrogen oxide (NO_X)*** compounds. Nitrogen oxide is formed at high temperatures, such as those developed during combustion in an automobile engine. Nitrogen oxide is one of the substances common in the photochemical oxidants that produce smog. It is unstable and changes back to nitrogen and oxygen easily at lower temperatures.

Ozone (O_3)

Ozone (O_3) is a form of oxygen photochemically produced in nature. The chemical formulas for oxygen (O_2) and ozone (O_3) are similar, differing by only one additional atom of oxygen per molecule. In the upper atmosphere, ozone is made by ultraviolet light reacting with oxygen. It may also be produced by an electric discharge in the air, such as lightning.

Ozone is a substance that can be either beneficial or detrimental to health. Ozone is a disinfectant and is sometimes used to purify water or to maintain a sterile atmosphere. It also removes odors in such places as cold storage rooms and hospitals. In these applications, a very small amount of ozone is used. However, in larger concentrations, it may be harmful to health. Symptoms that ozone can induce include chest pain, coughing, throat irritation, and congestion. It can also worsen current respiratory conditions.

An ozone concentration of 0.1 parts per million (ppm) is generally considered the maximum level permissible for an eight-hour exposure. For continuous occupancy, ozone should not exceed 0.01 ppm. The effect doubles for each 15°F (8°C) increase in temperature. The use of some electronic air cleaners may slightly increase ozone content. Ozone concentration is measured with ozone monitors. See **Figure 28-3**.

Radon (Rn)

Radon (Rn) is an odorless, tasteless, radioactive, inert gas that occurs naturally in soil and rocks. It is formed from the natural decay of uranium and is found in some industrial wastes.

Radon has been shown to cause lung cancer. When inhaled, it settles in a person's lungs. The radioactive particles then begin to damage the lung tissue. Radon gas comes from the soil and rock upon which a building is built. It may enter a building through small cracks in concrete floors, floor drains, sump pumps, and pores in hollow-block walls. See **Figure 28-4**.

Radon can be detected using a charcoal canister or a small container called an alpha track detector,

Ozone Solutions, Inc.

Figure 28-3. Wall-mounted ozone sensors are very sensitive and allow for two adjustable set points. Ambient ozone levels from outside are detected.

Copyright Goodheart-Willcox Co., Inc.

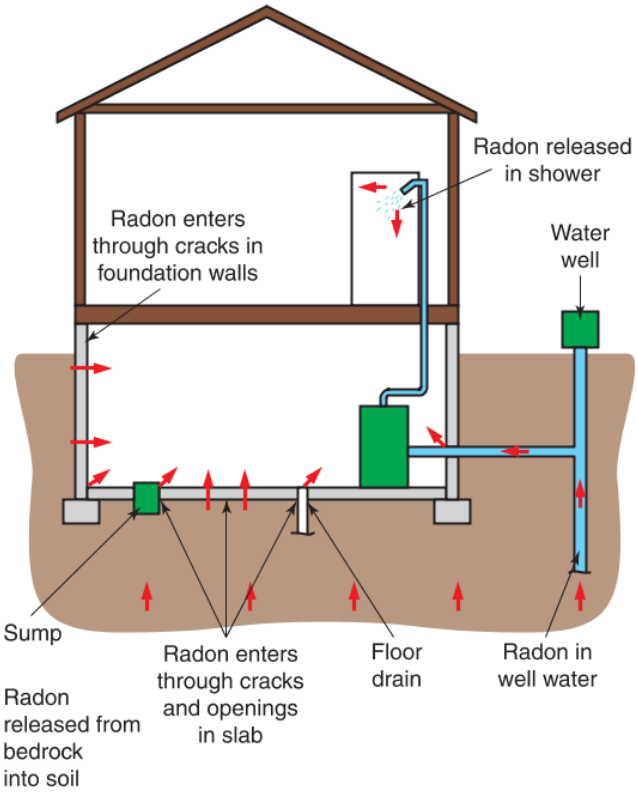

Goodheart-Willcox Publisher

Figure 28-4. Potential sources of radon.

Figure 28-5. The detectors are usually placed in the living areas of the house, where they absorb contaminants in the air over a period of time. At the end of the testing period, the detectors are sent to a laboratory for analysis. If the results show the presence of radon, the entry points of the gas must be located and repaired.

Steps to Reduce Radon Exposure

Steps can be taken to reduce radon exposure in residential homes. To stop gases from entering the home, a gas permeable layer, which often consists of a four-inch layer of clean gravel, can be placed beneath the floor or slab of the house. Plastic sheeting can be placed on top of the gas permeable layer and under the floor or slab. A PVC pipe can be run from the permeable layer, through the house, and vented out the rooftop. In this manner the gases are allowed to vent out without entering the home. An electrical junction box is often needed for the installation of an electric venting fan (an in-line fan). The fan draws the radon from beneath the home and through a pipe where it is then exhausted outdoors.

Large cracks can be filled with cement grout. Caulking compounds suitable for concrete can be used for small cracks. Painting basement walls and floors with two coats of an epoxy paint is recommended.

Organic Vapors

Organic vapors are a major source of air pollution. Portable odor monitors use a highly sensitive metal-oxide thermal conductivity sensor. Vapors that can be measured by such instruments include acetic acid, formaldehyde, ammonia, anesthetic gases, hydrogen peroxide, mercury vapor, nitrogen dioxide, nitrous oxide, and ozone. Numerous readings are initially made to set the quality standards or acceptable odor levels. Once this is established, the monitor will then identify the odor level at any time.

Volatile organic compounds (VOCs) include a variety of chemicals, some of which have short-term and long-term negative health effects. Organic chemicals are used in many household products. VOCs are emitted by a wide variety of products, including cleaning and disinfecting supplies, pesticides, furnishings, and office equipment. These products can

A—Charcoal Canister

B—Alpha Track Detector

RTCA—Radon Testing Corp of America, Inc.; National Cancer Institute

Figure 28-5. Radon detectors. A—Charcoal canister test kit. B—Alpha track detector.

Copyright Goodheart-Willcox Co., Inc.

release organic compounds while in use, as well as to some degree when stored.

28.3 Indoor Air Quality

Indoor air quality (IAQ) has become an increasing concern as a result of the unforeseen consequences of improved building standards. Building design, construction, and synthetic building materials have made buildings tighter. The resulting reduced infiltration of outdoor air and the vapors released from the new building materials have diminished the quality of indoor air. As building standards and construction methods evolved, building occupants began reporting building-related symptoms at a growing rate. Building-related symptoms include headache; fatigue; eye, nose, and throat irritation; confusion; dizziness; and skin rashes.

28.3.1 Residential Indoor Air Quality

According to studies by the American Lung Association, US residents spend about 65% of their time at home and stay indoors 90% of that time. As a result, there is a growing awareness of the importance of indoor air quality to good health. According to the U.S. Department of Health and Human Services and the Surgeon General's Office, approximately one-quarter of preventable illness worldwide is a result of poor environmental quality. The following are primary causes of poor IAQ in homes:

- Decreased fresh air infiltration due to tight construction and weatherproofing measures. Homes must be equipped with adequate and appropriate ventilation systems. If drafts are eliminated, another means of bringing fresh air into the house must be provided.
- Fumes and volatile organic compounds (VOCs) released from adhesives, paints, and synthetic building materials. Building and finishing materials must be used properly. Materials intended for outdoor use should not be used indoors unless such use is approved by the manufacturer.
- Moisture infiltration and seepage. Homes must be properly sealed to prevent moisture infiltration. Any moisture- or flood-related problems should be corrected as quickly as possible. Ventilation should be provided for bathrooms, kitchens, and other areas where steam or excessive humidity is generated.
- Occupant habits. Environmental tobacco smoke is a major cause of indoor pollution with a great potential for adverse health effects. A home should be cleaned regularly to prevent the buildup of excessive dust and unpleasant or unhealthy air contaminants.
- Lack of maintenance to the home and its HVAC system. Filters in the ventilations system should be changed regularly. HVAC ducts should be cleaned periodically. Any moisture-related issues should be corrected as soon as possible to prevent mold problems. The furnace and gas appliances must be properly vented and in good working order.

Indoor air pollutants can come from many sources, including household chemicals, pets, and dirt brought in from outside the home. Allergens and molds may form inside the house due to high humidity levels. Modern homes are built to be energy-efficient. In order to make the home energy-efficient, much of the natural ventilation in the home is eliminated. Such homes rely on the HVAC systems to bring in an adequate amount of fresh air.

Thinking Green

Controlling Indoor Air Quality

The most energy-efficient method of relieving IAQ problems is to identify the source of pollutants and reduce them at their source. Although increasing ventilation can often improve indoor air quality, doing so typically also increases energy usage. Limiting the number of pollutants in the air improves indoor air quality without increasing energy consumption.

Indications of IAQ Problems

Sensitivity among people to indoor air pollutants varies, often making it difficult to determine if a residential dwelling truly has an IAQ problem. When a resident complains about odors, health problems, or lack of comfort, an IAQ problem may be indicated. If an IAQ problem is suspected, the technician should attempt to uncover the cause and extent of the problem. Health complaints related to poor IAQ tend to diminish when the person leaves the residence.

Potential sources of indoor air pollutants include smoke (cigarette, cigar, or pipe), unvented gas appliances (stove, dryer, or hot water heater), pesticides used indoors, hobbies (such as model making or jewelry making), exhaust from motor vehicles left running in an attached garage, stored chemicals, pets with fur, below-ground living areas, and insulation made of urea-formaldehyde or asbestos. Questionnaires, such as the one in **Figure 28-6**, help the technician identify potential indoor air pollutants.

High-Risk Individuals

Some individuals have an increased susceptibility to indoor air pollutants. People with increased risk factors include the following:

- Children younger than four years of age.
- People older than sixty years of age.

Copyright Goodheart-Willcox Co., Inc.

Potential Sources of Indoor Air Pollutants—Residential

Discuss each of these items with the homeowner and circle Yes or No. Yes answers identify potential sources of indoor air pollutants.

Do any residents smoke?	Yes	No
Are there any unvented gas appliances, such as a stove, dryer or hot water heater?	Yes	No
Are pesticides used indoors?	Yes	No
Do any residents have hobbies such as woodworking, jewelry making, pottery, or model making?	Yes	No
Is there an attached garage where motor vehicles are left running or chemicals are stored?	Yes	No
Are there any furry pets living inside?	Yes	No
Is any part of the living area below ground?	Yes	No
Is the residence insulated with urea-formaldehyde or asbestos?	Yes	No
Are the burner or pilot flames on gas appliances yellow instead of blue?	Yes	No
Are scented candles used indoors?	Yes	No
Was the building constructed or remodeled recently?	Yes	No
Was pressed wood furniture or paneling installed recently?	Yes	No
Are air fresheners or deodorizers used indoors?	Yes	No
Are there musty odors present?	Yes	No
Are clothes dry cleaned frequently and stored in closets?	Yes	No
Are toilet bowl deodorizers or mothballs containing paradichlorobenzene used indoors?	Yes	No

Chart based on data from AERIAS Air Quality Science IAQ Resource Center

Figure 28-6. Checklist of potential sources of indoor air pollutants.

- People confined to the home for more than twelve hours per day.
- People undergoing chemotherapy.
- People with a compromised immune system.
- People with asthma, allergies, bronchitis, emphysema, or a heart condition.

Maintaining a good indoor air quality is especially important if an individual who has one of these risk factors is living in the residence. A high-risk individual is more likely to develop building-related illnesses. Poor indoor air quality could also threaten an individual's health by aggravating a preexisting condition.

Home and Residential Inspection

If a resident complains of an indoor air quality issue, the building should be thoroughly inspected. Areas of the home that generate IAQ complaints and typical causes of those complaints are shown in **Figure 28-7**.

Prior to completing a home inspection, the technician should listen to the occupant's IAQ complaints. Next, the technician should walk through the home and visually inspect areas of the home that are likely to cause the IAQ issues. During the inspection, the technician should complete a checklist similar to the one shown in **Figure 28-8**. The technician will need the occupants' input in order to complete such a checklist.

Indoor air quality problems are often linked to health and comfort issues. Complaints regarding temperature and humidity may offer clues to indoor environmental problems. Such complaints may include one or more of the following:

- Drafty or stale areas of the residence.
- Humidity levels above 60% or below 40%.
- Interior areas that seem stuffy or musty.
- Areas that are too hot or too cold.
- Noticeable lack of air movement.
- An odor of mold or mildew.

Residential Assessment

Complaints regarding IAQ generally fall into four major categories:

- Ventilation-related complaints. Symptoms appear to be related to inadequate ventilation, and no strong emission sources are noted.
- Source-related complaints. Timing of symptoms coincides with the presence of a source of pollution or contamination.
- Chemical or biological hypersensitivity. The individual reacts to the presence of small quantities of chemicals or bioaerosols, which does not appear to affect others.
- Perceived IAQ problems. Symptoms are unrelated to IAQ, but may be due to other factors such as dust-, water-, or food-borne illnesses, skin contact with

Copyright Goodheart-Willcox Co., Inc.

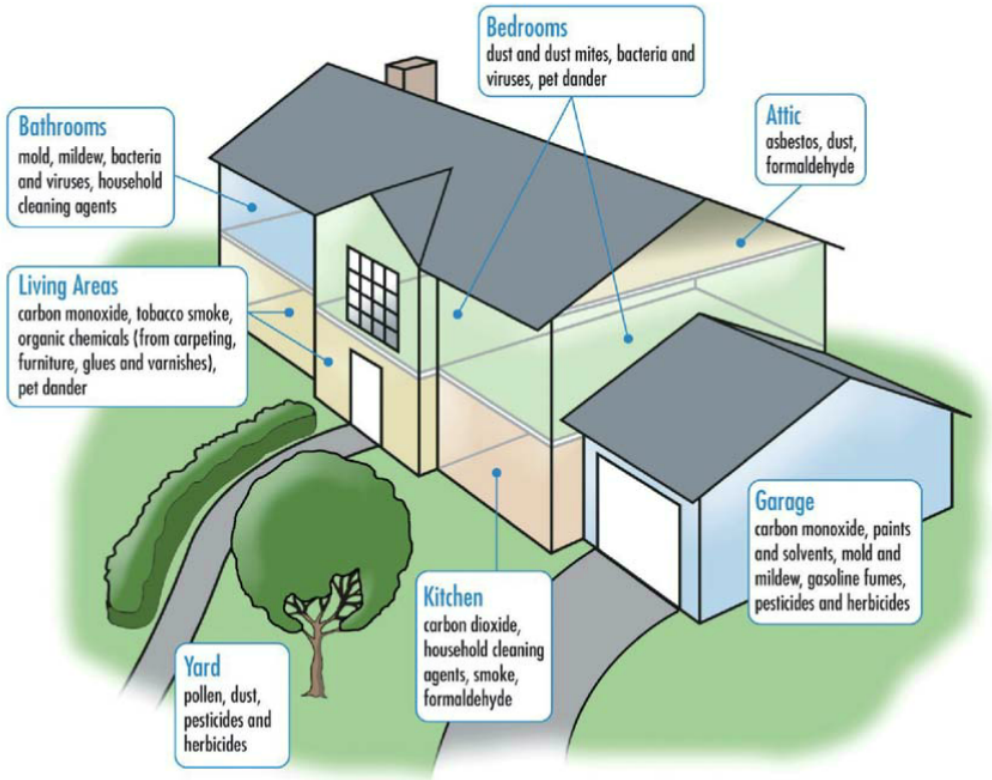

Lennox Industries Inc.

Figure 28-7. IAQ problems common in the various areas of a home.

Home and Residential Building Inspection

The items below refer to residences. Facility managers of multifamily residential buildings should view inspection checklists for commercial and educational buildings for applicable entries. Yes answers identify potential sources of IAQ problems.

Is dust visible on the furniture?	Yes	No
Is dust or dirt staining the walls, ceilings, furniture, or draperies?	Yes	No
Are cleaning and vacuuming put off or not done regularly?	Yes	No
Does the vacuum system use filters that are not high-efficiency particulate air (HEPA) filters?	Yes	No
Is food kept out overnight?	Yes	No
Is there evidence of pests such as cockroaches, rats, or mice?	Yes	No
Can people smell chemicals or other odors when they enter the residence?	Yes	No
Do cooking odors linger for several hours?	Yes	No
Are there leaks around or under sinks?	Yes	No
Is there condensate on windows, window sills, or window frames?	Yes	No
Do the cold water pipes have condensation on them?	Yes	No
Do the walls have condensate on them?	Yes	No
Does water get backed up in the drains?	Yes	No
Do toilet leaks occur?	Yes	No
Are there brown stains or discoloration of ceilings, walls, or furnishings?	Yes	No
Is mold growing anywhere in the residence?	Yes	No
Is soot present around the furniture, boiler, or hot water heater?	Yes	No
If residence is heated with gas or oil furnace, can the odor of gas or oil fumes be detected?	Yes	No
If residence is heated with wood, can the smell of wood smoke be detected?	Yes	No
Are any paint or furnishing odors noticeable when entering the residence after being away?	Yes	No

Chart based on data from AERIAS Air Quality Science IAQ Resource Center

Figure 28-8. A home and residential building inspection document helps the technician identify causes of poor indoor air quality.

Copyright Goodheart-Willcox Co., Inc.

toxic materials, infectious disease, or psychological or sociological influences such as stress.

The initial interview of the occupant will identify IAQ complaints. The technician should discuss the concerns with the occupant and perform an inspection in an effort to identify obvious causes. In many cases, the cause of the IAQ complaint can be quickly identified and corrected. If the cause of the IAQ complaint cannot be identified during the inspection, further tests are required.

In some cases, an in-depth investigation by an IAQ expert will be necessary. The consultant may follow a process to diagnose the IAQ issue and recommend potential solutions. This process may include identification of complaint patterns, assessment of the HVAC system, determining and prioritizing of sources of pollution, testing of air pollutants, and making conclusions and recommendations.

28.3.2 Indoor Air Quality in a Commercial Setting

Poor indoor air quality can also be a problem in the workplace. Building-related symptoms have been proven to negatively affect productivity. Studies have shown that productivity can be increased by improving the working environment. Lack of adequate environmental control (such as temperature and humidity) and elevated pollutant levels contribute to poor IAQ.

Confirmation of an indoor air quality problem can be difficult because the sensitivity to indoor pollutants varies from person to person. If the occupants of a building complain about building-related symptoms, a trained technician should perform a systematic investigation to determine if an IAQ problem exists. A form like the one shown in **Figure 28-9** can help to iden-

Potential Sources of Indoor Air Pollutants—Commercial

The items below refer to offices. Yes answers identify potential sources of IAQ problems.

Is the office dirty or dusty?	Yes	No
Is the office not cleaned or vacuumed (with HEPA system) thoroughly and regularly?	Yes	No
Can debris be seen falling from the air supply?	Yes	No
Does the air supply outlet have condensates or black soil on it?	Yes	No
Are there any new furnishings or electronic equipment in the office?	Yes	No
Are scented cleaners used to clean the office?	Yes	No
Does trash sit in the office for more than eight hours?	Yes	No
Does the office have pests such as cockroaches, rats, or mice?	Yes	No
Are pesticides used in the office?	Yes	No
Are chemicals used in the office?	Yes	No
Can people smell chemicals or other odors when they enter the office?	Yes	No
Has a fluid spill been allowed to stand?	Yes	No
Are permanent markers or other graphic materials used in the office?	Yes	No
Are photocopiers, laser printers, or photo processing equipment used in the office?	Yes	No
Are perfume, aftershave, or other strong odors present?	Yes	No
Does water back up in the drains?	Yes	No
Do toilet leaks occur?	Yes	No
Are there leaks around or under office sinks and/or water fountains?	Yes	No
Is there condensate on windows, window sills, or window frames?	Yes	No
Are there musty odors?	Yes	No
Has there recently been a remodeling project that produced dust or chemical odors?	Yes	No
Do the cold water pipes have condensation on them?	Yes	No
Has condensate been present on the indoor side of exterior walls?	Yes	No
Are there brown stains or discoloration of ceiling tiles or walls?	Yes	No

Chart based on data from AERIAS Air Quality Science IAQ Resource Center

Figure 28-9. A form can help a technician identify possible causes of IAQ complaints in a commercial building.

Copyright Goodheart-Willcox Co., Inc.

tify potential sources of IAQ problems in a commercial setting. The technician is able to answer many of the questions by performing a visual inspection. The remaining questions can be answered by interviewing the building's occupants.

The technician should examine both the indoor ventilation system and the total ventilation system. When evaluating the systems, the technician should answer the following questions:

- Are the outside air intakes located near a source of pollution?
- Are any of the vents (supply or return) blocked?
- Do the air ducts have fiberglass liners?
- Is vehicle exhaust seeping inside?
- Are odors from restrooms noticeable outside the restrooms?
- Is there an odor of mold or mildew?
- Is there an odor of chemicals?
- Are fume hoods being used correctly in areas where chemicals are being used?

Health problems associated with indoor air pollution include the following: headaches, itchy eyes, confusion or dizziness, breathing problems, sore throat, nasal congestion, drowsiness, skin rash, fatigue, and increased allergy or asthma attacks. If several people, especially those who work in a particular area, have similar complaints, there may be an indoor air problem.

Complaints about temperature and humidity are often clues to indoor air problems. Such issues may include any of the following: drafty or stale air in the office, humidity levels above 60% or below 40%, temperature too hot or too cold, or complaints of noise or crowding.

Commercial IAQ Assessment

Assessment of IAQ problems in commercial buildings is similar to the assessment of IAQ problems in residential settings. Investigations are often prompted by complaints regarding odors, health concerns, or comfort concerns. Complaints may be ventilation-related, source-related, the result of chemical or biological hypersensitivity, or perceived IAQ problems that are actually caused by other factors.

A more in-depth, thorough investigation may need to be conducted by an IAQ expert. This expert will attempt to identify complaint patterns, assess HVAC systems, determine pollutant sources, test air pollutants, and develop conclusions and recommendations.

Educating Occupants and Staff

Residents and building maintenance staff should be educated regarding the causes and remedies of IAQ issues. The importance of regular maintenance and inspection should be stressed. If the building's staff takes a proactive role, potential indoor environmental issues can be alleviated or reduced. Recommendations to staff may include the following:

- Use fewer toxic supplies and materials.
- Use only the exact amount of chemicals needed.
- Do not use chemicals in air ducts.
- Do not use ozone-generating air cleaners.
- Conduct activities, such as roofing, painting, and remodeling, after hours.
- Clean the living/working spaces regularly.
- Use vacuum cleaners with HEPA filters.
- Clean carpets one to two times each year to remove allergens, mold, and dust.
- Control sources of moisture by eliminating or preventing them.
- Use air filters with a MERV rating of 12. ***MERV*** is the Minimum Efficiency Reporting Value, a measurement scale developed by ASHRAE to rate the effectiveness of air filters.
- Develop maintenance and inspection plans for HVAC system.

28.3.3 Preventing IAQ Problems

To effectively deal with IAQ issues, HVAC technicians must become familiar with the various causes and effects, **Figure 28-10**. Prevention of IAQ problems in residential and commercial buildings requires a four-step approach:

1. Controlling indoor pollutants and sources.
2. Providing adequate ventilation and filtration.
3. Maintaining acceptable indoor environmental conditions.
4. Educating occupants, such as residents and maintenance staff.

Control of Indoor Pollutants

Indoor pollutants can be controlled using a variety of measures. The following are some actions that can be taken to control pollutants at their source. When discussing IAQ complaints with customers, explain that these simple actions can improve the quality of the air inside their home or business:

- Select and use nonaerosol and nontoxic products whenever possible.
- Coat pressed-wood products with polyurethane to reduce formaldehyde emissions.
- Maintain a moderate temperature and humidity.

Copyright Goodheart-Willcox Co., Inc.

IAQ Problems and Solutions			
Source of IAQ Problem	**Symptoms**	**Ideal Levels**	**Possible Solutions**
Volatile Organic Compounds (VOCs)	• Respiratory difficulties • Allergies	Minimal VOCs	• Install a heat recovery ventilator (HRV) • Install an energy recovery ventilator (ERV) • Install an air purification system
Bioaerosols and other airborne particulates	• Respiratory difficulties • Allergies	Minimal particle count	• Use high efficiency (MERV-13 or higher) filter • Install a germicidal light on evaporator coil
Humidity	• Discomfort • Increased fungal growth	25%–55%	• Humidifiers • Dehumidifiers
Temperature	• Discomfort	68°F–81°F	• Install a better thermostat • Instruct customer on proper system operation
CO_2 (poor ventilation)	• Stale air • Sick building syndrome	700 PPM CO_2	• Install a heat recovery ventilator • Install an energy recovery ventilator • Replace filters regularly
CO	• Illness • Death	Zero PPM	• Repair furnace or gas appliance • Do not operate vehicles or gas-powered equipment in an attached garage • Install a CO detector

Goodheart-Willcox Publisher

Figure 28-10. Symptoms associated with poor IAQ, the likely causes, and their solutions.

- Install and use exhaust fans in bathrooms, kitchens, and other areas that produce excessive humidity.
- Repair any plumbing leaks immediately.
- Remove lint around and under the clothes dryer on a regular basis.
- Use fragrance-free, nonaerosol personal care products.
- Clean the carpet and upholstered furniture on a regular basis using a HEPA vacuum system.
- Use a dehumidifier to reduce humidity, if necessary.
- Have the HVAC system and chimney inspected each year and perform proper maintenance of HVAC system.

Providing Adequate Ventilation and Filtration

To maintain adequate ventilation and filtration, the technician should ensure that the design and operation of the HVAC system is in accordance with ASHRAE Standard 62.1, *Ventilation for Acceptable Indoor Air Quality*, and ASHRAE Standard 129, *Measuring Air Change Effectiveness*. Air filters with a Minimum Efficiency Reporting Value (MERV) of 13 should be used. Be certain that filters fit correctly and are changed regularly. There should be a maintenance and inspection plan for the HVAC system, including at least the two following steps:

- Ensure that outdoor air intakes are free of obstruction and potential pollutant sources.
- Provide exhaust ventilation in rooms with higher pollutants, such as bathrooms and kitchens.

Maintaining Acceptable Indoor Environment Conditions

To maintain acceptable indoor environmental conditions, temperature, humidity, and airflow must be kept at acceptable levels. Keep humidity levels between 40% and 60% by running the cooling system when humidity is high or by using humidifiers and dehumidifiers to maintain proper levels. Maintain temperature between 72°F and 76°F (22°C and 24°C) by properly programming the thermostat. Make sure adequate ventilation is maintained by programming the thermostat to operate the fan occasionally if it has that capability. Also, make sure furnace filters are replaced on schedule. Locate and eliminate unwanted drafts. Drafts can bring in unwanted humidity, transfer heat between the indoors and outdoors, bring in dust and other contaminants, and make occupants uncomfortable.

28.3.4 Classifications of Indoor Air Quality Issues

Problems with indoor air quality can cause a variety of symptoms in occupants. Often these symptoms lead to the diagnosis of one of three classified

Copyright Goodheart-Willcox Co., Inc.

conditions: sick building syndrome (SBS), building-related illness (BRI), or multiple chemical sensitivity (MCS). The majority of IAQ concerns stem from poor ventilation, poor filtration, and contaminated HVAC systems.

Sick Building Syndrome (SBS)

One of the most commonly diagnosed IAQ conditions is ***sick building syndrome (SBS)***. It can usually be confirmed when approximately 20% or more of a building's occupants complain of drowsiness, fatigue, eye and skin irritations, or respiratory problems. SBS health problems appear to be due to the building. The symptoms frequently disappear when individuals are removed from the environment. In cases of sick building syndrome, a specifically diagnosable illness is not identified.

OSHA describes sick building syndrome as a reaction to chemical, physical, or biological stimuli. According to NIOSH (National Institute of Occupational Safety and Health), a deficiency in the ventilation system is the largest single cause of SBS. Sick building syndrome can be caused by any combination of the following factors:

- Poor temperature/humidity control.
- Poor ventilation and lighting.
- Improper maintenance and system design.
- Airborne chemicals or pollutants.
- Excessive noise.

Building-Related Illness (BRI)

Building-related illness (BRI) is a diagnosable illness caused by exposure to airborne agents. BRI symptoms do not disappear when the occupant moves to a more favorable environment. BRI differs from SBS in that SBS has no specific cause and no identifiable illness.

Examples of BRI include colds, flu viruses, tuberculosis, measles, and smallpox. BRI illnesses can permanently damage health and, in extreme cases, may be fatal. In BRI cases, the services of a qualified health professional should be sought immediately. There are numerous causes of BRI, including viruses spread by the airflow system, stagnant water, toxins and allergens, radon, and microscopic airborne biological agents, such as spores and fungi.

A specific example of a building-related illness is ***Legionnaires' disease***. Symptoms include headache, high fever, and respiratory problems. This disease is caused by the Legionella bacteria, which can live in cooling towers, evaporative condensers, and domestic water systems.

Inadequate preventive maintenance can provide the nutrients that bacteria such as Legionella need to thrive. Proper equipment design and proper maintenance of systems may reduce the risk of bacteria growth. Periodic disinfecting also helps to prevent the bacteria's growth.

The HVAC system should be checked whenever evidence indicates the presence of diseases, such as humidifier fever, allergic asthma, and allergic rhinitis. The system must be checked to determine if any microorganisms are present. An initial walk-through is recommended, with visual inspection for possible reservoirs and sites of contamination. If a suspected site is located, a sample should be obtained and analyzed.

Multiple Chemical Sensitivity (MCS)

A small portion of the population has experienced ***multiple chemical sensitivity (MCS)***. This is a condition that is unexplained, manifesting itself in reported sensitivities and adverse reactions to low levels of chemicals, bioaerosols, and other irritants. Individuals that develop multiple chemical sensitivity appear to have abnormal sensitivity to contaminants in the environment. MCS can also be referred to as *chemical hypersensitivity* or *environmental illness*.

28.4 Air Cleaning

Many IAQ problems can be solved or avoided by cleaning the air in an enclosed space. Filtering is one of the most common methods of cleaning the air. It is possible to remove almost 100% of air contaminants; however, doing so can be expensive. Removal of 90% to 95% is much more common and practical.

28.4.1 Air Filters

An ***air filter*** is a device made of fibrous materials used to remove solid particulates, such as dust, pollen, mold, and bacteria, from circulating air. Having an air filter in series with an air handler allows the filter to passively remove contaminants from the air. Air filter efficiency is measured by the following three factors:

- Total weight of dirt collected.
- Size of the smallest particle that can be removed.
- Degree of discoloration on the exhaust side of the filter being tested.

Air filters and electronic air cleaners are rated by ASHRAE Standard 52.2, which determines efficiency by the size of particle that the filter will capture, **Figure 28-11**. Manufacturers often rate their air filters as 90–98% efficient. This usually refers to an air filter's ability to capture only large particles (3.0–10.0 microns). See **Figure 28-12**.

Copyright Goodheart-Willcox Co., Inc.

Air Filter Efficiency		
Particle Type	**Class**	**Particle Size (Microns)**
Small	E1	0.3–1.0
Medium	E2	1.0–3.0
Large	E3	3.0–10.0

Goodheart-Willcox Publisher

Figure 28-11. Air filter efficiencies are usually a measure of the percentage of class E3 large particles the filter is capable of capturing.

Minimum Efficiency Reporting Values and Applications		
MERV	**Typical Contaminant**	**Typical Application**
13 through 16 (0.30 to 1.0 microns)	All bacteria Most tobacco smoke Droplet nuclei Cooking oil Copier toner Face powder Paint pigment	Hospital inpatient care General surgery Smoking lounges Superior commercial buildings
9 through 12 (1.0 to 3.0 microns)	Legionella Lead dust Milled flour Coal dust Auto emissions Nebulizer drops Welding fumes	Superior residential buildings Better commercial buildings Hospital laboratories
5 through 8 (3.0 to 10 microns)	Mold Spores Hair spray Cement dust Snuff Powdered milk	Commercial buildings Better residential buildings Industrial workplaces Paint booth inlets
1 through 4	Pollen Spanish moss Dust mites Sanding dust Paint spray Dust Textile fibers	Minimum filtration Residential Window air conditioners

Goodheart-Willcox Publisher

Figure 28-12. Chart of MERV ratings and typical contaminants found in various applications.

There are five basic types of air filters:

- Disposable filters.
- Washable filters.
- Electrostatic filters.
- Carbon filters.
- HEPA filters.

Each type of air filter serves the same basic function of removing pollutants from the air. The major difference is the amount of pollutants each removes from a specific volume of air over a given period.

Code Alert

Air Filters

Local building codes may dictate the way central heating and air conditioning systems are to be filtered. Codes may dictate what media can be used, airflow requirements through the filter, and the flammability limits of any treatment (such as an adhesive or static spray) that is to be applied to the filter element.

Disposable Filters

As their name implies, disposable filters are meant to be discarded when they become dirty. There are several different types of disposable filters available on the market. Two common types of disposable filters are fiberglass panel filters and pleated media panel filters. These filters generally consist of a cardboard frame, filter material, and sometimes a thin metal grille, **Figure 28-13**.

In most residential applications, these disposable filters have a thickness of 1″. Disposable filters for commercial use can be several inches thick. The efficiency rating of this type of filter is usually low to medium.

Washable Filters

Washable filters are designed to be used repeatedly. The filters can be removed, cleaned as directed, dried, and reinstalled. Washable filter media materials include synthetic media, such as polyester and foam, aluminum expanded metal mesh, and wire cloth.

Electrostatic Filters

Static electricity, a buildup of charged particles, is the reason dirt and dust cling to walls, drapes, and ceilings. Static electricity also attracts dirt and dust to vertical and overhead surfaces.

Static electricity is often generated when two surfaces rub together and are then separated. For example, rubbing a cloth on a rubber ball will build up surplus electrons on the ball, giving it a negative charge. The cloth will lack electrons, giving it a positive charge. This imbalance of electrons is called static electricity.

Copyright Goodheart-Willcox Co., Inc.

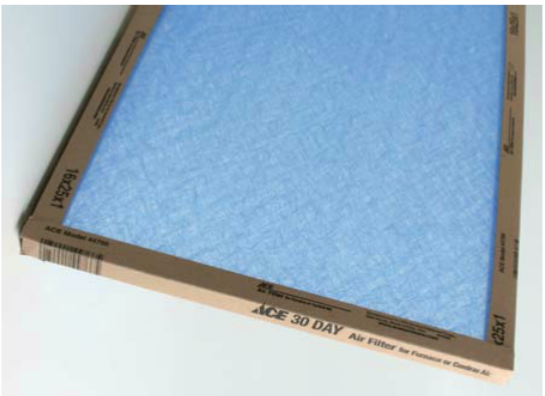

A

B

Goodheart-Willcox Publisher; Camfil Farr Co.

Figure 28-13. Two types of disposable filters are most common. A—Fiberglass panel filters are generally the least expensive options, but are also the least effective at filtering small particles. B—A pleated-type disposable air filter. The folds in the filter material increase the filtering surface.

Static Electricity	
Material	**Electrical Charge**
Asbestos	+ + + + + + + + +
Glass	+ + + + + + + +
Human hair	+ + + + + + +
Nylon	+ + + + + +
Wood	+ + + + +
Lead	+ + + +
Silk	+ + +
Aluminum	+ +
Paper	+
Cotton	–
Steel	– –
Sealing wax	– – –
Hard rubber	– – – –
Acetate rayon	– – – – –
Nickel copper	– – – – – –
Brass silver	– – – – – – –
Synthetic rubber	– – – – – – – –
Orlon	– – – – – – – – –
Saran	– – – – – – – – – –
Polyethylene	– – – – – – – – – – –
Teflon	– – – – – – – – – – – –
Silicone rubber	– – – – – – – – – – – – –

Goodheart-Willcox Publisher

Figure 28-14. A variety of materials and their abilities to generate static electricity. Materials nearer the top of the list will tend to have a positive (+) charge, while materials nearer the bottom will tend to have a negative (–) charge. The farther apart the substances are on the list, the greater their combined ability to generate static electricity when they are touched together.

If the imbalance of electrons is great enough, the electrical charge will jump an air gap and create a spark. Under the right conditions, this spark could cause a fire or explosion. Different materials have different potentials for generating static electricity, **Figure 28-14**.

Basically, an ***electronic air cleaner*** puts a static electrical charge on all particles in the air that pass through it. These charged particles are then attracted to collector plates with an opposite electrical charge. Electronic air cleaners are also called electrostatic air cleaners, electronic filters, or electrostatic filters.

Thinking Green

Passive Electrostatic Filters

In many cases, a passive electrostatic filter can be installed in an HVAC system to improve filtering capability without increasing energy consumption. The electrostatic charge is produced by the friction of air blowing across the fibers in the filter, so no outside power source is required. Several manufacturers produce electrostatic coating that can be sprayed onto a disposable filter to give it an electrostatic charge.

Copyright Goodheart-Willcox Co., Inc.

Carbon Filters

An air filter made of activated carbon can remove solid particles, odor-causing gases, and bacteria. In activated-charcoal form, the carbon can be made from various substances, including coconut shells and petroleum refining by-products. The activated charcoal will adsorb as much as 50% of its weight in foreign gases. Because of its ability to reduce odors, this type of air filter is often used in air conditioners and in refrigerators. **Figure 28-15** shows an activated carbon filter assembly.

It is possible to recycle used carbon filters. However, this is usually done by the manufacturers. They remove and process the carbon for reuse.

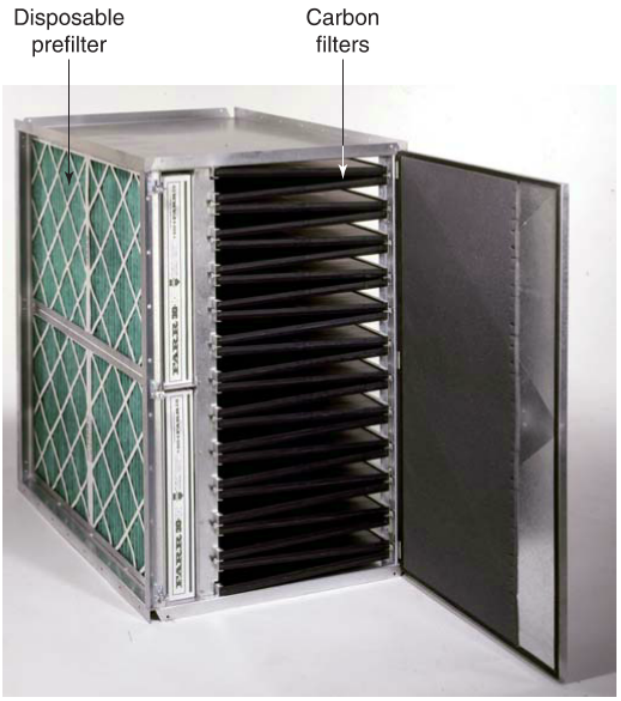

Camfil Farr Co.

Figure 28-15. Activated carbon filter assembly equipped with a throwaway prefilter.

HEPA Filters

A HEPA (high-efficiency particulate air) filter removes a high percentage of particles in air as the air passes through an air purifier. To qualify as a HEPA filter under US government standards, a filter must capture 99.97% of airborne particles 0.3 microns or larger. A micron is one-millionth of a meter.

HEPA filters perform significantly better than ionic and electronic air cleaners. They also often improve in performance over time, whereas dirt accumulation on the plates causes a decrease in performance in the ionic and electronic air cleaners. HEPA filters are used in a variety of applications, including medical facilities and aircraft, **Figure 28-16**.

Camfil Farr Co.

Figure 28-16. HEPA filters capture very fine particles but do not filter out gases and odors.

Air Filter Maintenance

Air filters tend to unload excess contaminants once their capacity has been reached. These contaminants are then released downstream in the system, dirtying heat exchange surfaces, covering the inside of ductwork, and entering the conditioned spaces. This can result in sooty soil on ceilings, diffusers, and wall surfaces. A dirty air filter can also affect energy cost due to inefficient heat transfer at coil surfaces and a resulting increased fan run time. Air filters should be changed at approximately 80% of design final resistance, as energy cost rises sharply with resistance.

When installing air filters, check the support of the air filter frames. Also look for leaks around frames. Be sure there is no light showing around the frame, which may allow unfiltered air to leak by. The fit of air filters in frames should be plumb and square.

Visually check the condition of the filter media. If there are any tears, rips, or holes, replace the filter. Filters have design specifications providing both initial and recommended final resistance to airflow. These are usually stated in inches of water. A manometer can be used to measure pressure drop across the filters in inches of water. The two manometer openings are

Copyright Goodheart-Willcox Co., Inc.

connected to measure the airflow on the two opposite sides of the filter. These measurements will indicate the pressure drop across the air filter.

A ventilation system is usually designed to allow the filter pressure drop (resistance) to be about one-fourth of the total pressure drop (pressure rise across the blower fan). For example, if the total pressure rise across the fan is 4.0″ (10 cm) of water column, then the allowed pressure drop across the filter is 1.0″ (2.5 cm) of water column.

Measuring Air Filter Efficiencies

Air filters are tested in laboratories. They can also be tested on the job. One test determines how many 0.3 micron-size particles the filter can remove. This test is made by measuring the interference with diffused (scattered) light. To increase filtering surface or area in air filters, many different designs are used. A popular method to increase the area is to use pockets or pleats to trap the air.

As described in ASHRAE Standards 52.1 and 52.2, three common methods are used to measure air filter performance:

- Atmospheric dust spot efficiency.
- Synthetic dust weight arrestance.
- Fractional efficiency.

Atmospheric dust spot efficiency measures the ability of an air filter to remove atmospheric dust by evaluating the flow rates on both sides of the filter and the quantity of material it captures. This test is used to assess medium efficiency air filters and air cleaners. Special filter paper targets are located on both sides of the tested filter. The efficiency is calculated based on the quantity of air drawn through the target filter, the amount of light transmitted through the target filter, and the difference in light transmission for the two paper filter targets. The amount of air and light transmitted through the target filter papers decreases during the test due to a buildup of dust.

Synthetic dust weight arrestance is a measure of a filter's ability to remove synthetic dust from test air. It is calculated by comparing the weight of the synthetic dust that gets caught in the filter being tested and the weight of the amount of dust fed into the filter.

Another air filter efficiency test is called the ***DOP HEPAP Method***. The name of the test comes from the name of the testing particles, dioctyl phthalate. This test is used mainly with high-efficiency filters. Particles of 0.3 microns are sprayed into the inlet duct of the filter being tested. Small, white, sample filters collect some of this dust from the airstreams ahead of the test filter. Other sample filters collect dust from the air leaving the test filter. The difference in the sampling filters, by color or weight, determines the efficiency of the test filter. For example, if the outlet sample filter collects only 1% of the amount of particles as the inlet sample filter, the test filter has a 99% efficiency.

The ***fractional efficiency test*** is the most advanced and accurate of the techniques for measuring air filter performance. It uses high-tech equipment to count the number of particles trapped by an air filter. The test then classifies the particles based on their size. A challenge aerosol is chosen that will be able to accurately measure the particle sizes. A particle count is taken both upstream and downstream of the filter. The efficiency of the filter is calculated based upon each size range.

28.4.2 Electronic Air Cleaners

Electronic air cleaners have four main parts:

- Frame.
- Power supply.
- Prefilter and airflow distributor.
- Electronic cell (electronic grid).

Electronic air cleaners are available as stand-alone units or for installation in ductwork. Stand-alone units can be installed on ceilings or in a portable cabinet, **Figure 28-17**. In addition to the four basic components already described, stand-alone electronic air cleaners are usually equipped with a fan to draw in and expel air.

Figure 28-18 shows an electronic air cleaner that is designed to be installed at the inlet of the return air ductwork. Many electronic air cleaners are installed closer to the air handler, just before the inlet to the blower. These can be installed in several ways depending on the orientation of the air handler and

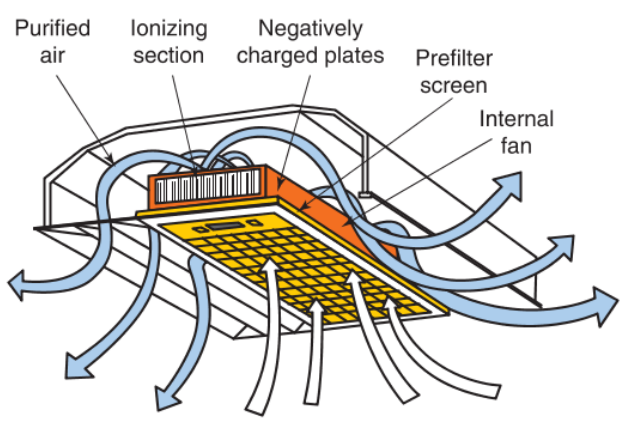

Goodheart-Willcox Publisher

Figure 28-17. Stand-alone electronic air filters may be mounted on the ceiling or may be a portable. A ceiling-type electronic air filter is shown here.

Copyright Goodheart-Willcox Co., Inc.

General Filters, Inc.

Figure 28-18. Electronic air cleaner installed at the inlet of the return air duct.

the available ductwork, **Figure 28-19**. Regardless of the type of electronic air cleaner being used, the purpose is the same—to remove airborne particles, such as smoke, dust, mold spores, pollen, and bacteria from the air.

In most electronic air cleaner designs, the air first passes through a washable filter, often referred to as the prefilter. The prefilter is usually made of metal mesh and removes most of the larger particles of dirt, which helps extend the capacity of the device. After going through the prefilter, the air passes into the electronic part of the filter, called the electronic grid or electronic cell. In the electronic cell, a wire with a high positive voltage is positioned between two negative ground wires. This creates a strong electrical field between the wires.

As particles in the air pass through the electrical field, they lose electrons, giving the particles a positive charge. These particles are then drawn to the grounded collector plates, which have a negative potential relative to the wires, **Figure 28-20**.

A common design variation has both positively charged and negatively charged plates. In these designs, the positive plates repel the positively charged particles as the negatively charged plates attract and trap them. Since the plates work together, the particles are moved to the negative collector plates more quickly. This design is better than the negative plate–only design in high-airflow applications because it reduces the chances that a charged particle can pass all the way through the filter before being captured by the collector plates. A typical household electronic air cleaner is shown in **Figure 28-21.**

9

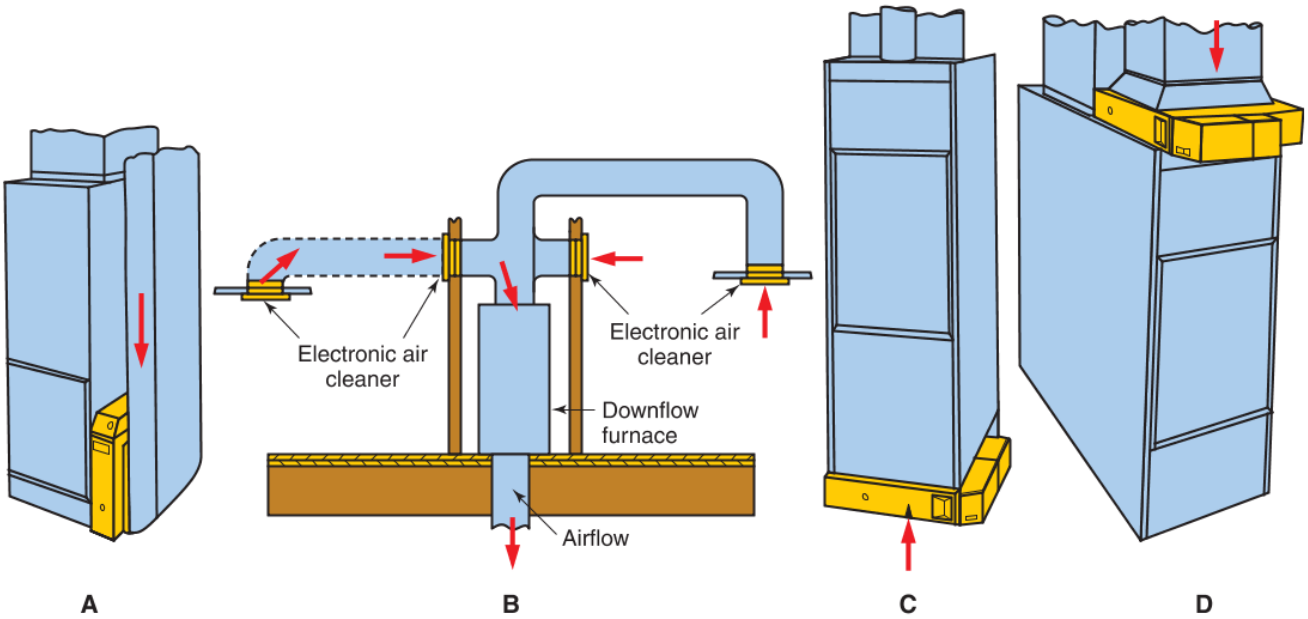

Honeywell, Inc.

Figure 28-19. Electronic air filters may be installed in various places in ductwork. A—horizontal in the return air side. B—Individual units at room air returns. C—In an upflow orientation. D—In a downflow orientation.

Copyright Goodheart-Willcox Co., Inc.

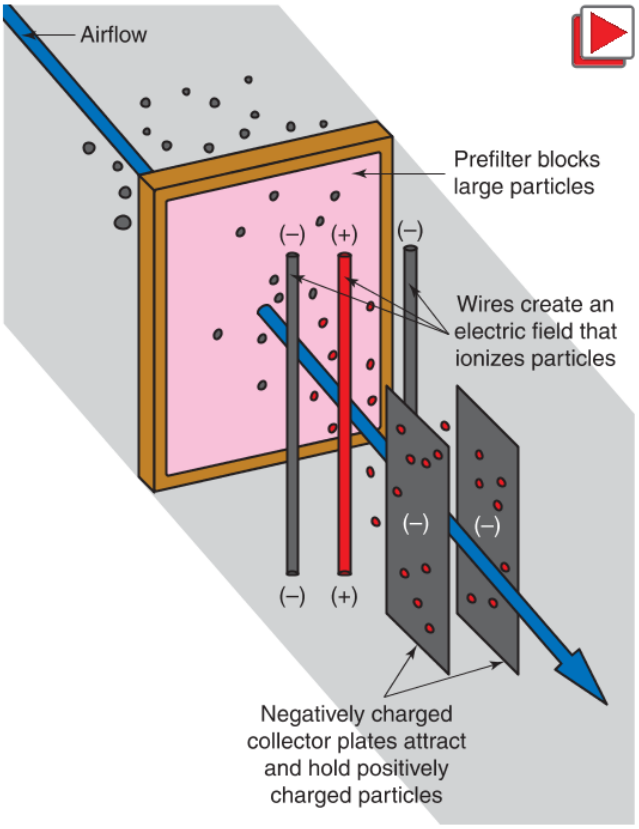

Goodheart-Willcox Publisher

Figure 28-20. A simplified drawing shows how an electronic air cleaner works. The prefilter traps large particles. The small particles that pass through the prefilter become positively charged when they pass between the positive and negative wires in the electronic cell. Positively charged particles are attracted to and captured by the negatively charged collector plates.

Honeywell, Inc.

Figure 28-21. A whole house electronic air cleaner is capable of removing 93% of medium size particles (1.0–3.0 microns) and 98% of large particles (3.0–10.0 microns).

Safety Note

Electronic Air Cleaners

Electrical potentials as high as 12,000 V are developed between the wires in the electronic cell. Due to the high voltages used to ionize pollutants, electronic air cleaners can be dangerous. Always disconnect the unit from its electrical supply before servicing. In addition, it is important that the unit be cleaned according to the recommended schedule. If excess dirt is allowed to build up inside the unit, the high voltages in the electronic cell may cause arcing, which could result in a fire or explosion.

The electronic cells and prefilter must be cleaned every two to three months. Most electronic air cleaners have cleanable filters. To clean the electronic cell and screens, disconnect the power and then remove the filter. Clean the filter with a mixture of warm water and mild detergent. Rinse the filter with hot water until the water runs through clean. Dry the filter thoroughly and return it to its proper position. Turn on the power. With proper care and maintenance, these filters last indefinitely.

Electronic air cleaners must be installed level and plumb to provide efficient airflow. Airflow should be evenly distributed across the face of the air cleaner for maximum efficiency. If the unit is installed near an airflow elbow, movable air vanes or baffles should be installed inside the duct to help the air flow smoothly around the bend. A fine-mesh screen or filter should be installed ahead (upstream) of the filter to prevent excessive lint from entering the unit. Excessive lint interferes with electronic air cleaner operation.

28.4.3 Ionizing Air Purifiers

If charged particles are allowed to pass from the ventilation system into a room, they will stick to walls, furniture, and other surfaces. Ionizing the air in the room can neutralize the static electrical charges that cause dirt and dust to stick to walls and other surfaces. Ionizing means

Copyright Goodheart-Willcox Co., Inc.

to give a positive or negative charge to atoms or molecules by adding or removing electrons. When the air is ionized, electrons are exchanged between the negatively charged air and the positively charged dirt and dust. When electrons are added to the dust particles, they lose their electric charge. The electrically neutral dirt and dust is no longer attracted to the walls and other surfaces, so it settles to the floor. The dirt and dust can then be collected with a HEPA vacuum system.

Caution

Air Purifiers and Ozone

Some ionizing air purifiers produce ozone as a by-product. In excessive concentrations, ozone can irritate eyes and the respiratory system. The manufacturer's instructions should be followed closely when using an ionizing air purifier.

28.4.4 Ultraviolet Light

Wavelengths within the short wave, or C band, of UV light (UVC) are effective germicidal light wavelengths. UVC lamps use electrical discharge through low-pressure mercury vapor enclosed in a glass tube. The lamp transmits UVC light, primarily at the mercury wavelength of 254 nanometers. This wavelength has been found to be efficient in the killing of microorganisms. Therefore, UVC from mercury lamps also is referred to as ***UVG*** (ultraviolet germicidal). When used appropriately, UVGs destroy viruses, bacteria, and fungi. The type of microorganisms and quantity killed depends on the length of exposure to the ultraviolet rays and the output or intensity of the lamps.

Safety Note

Ultraviolet Light

Avoid looking at or being exposed to ultraviolet light rays. Ultraviolet lights are harmful to eyes and skin. The risk of skin and eye damage increases with the length of exposure.

Ultraviolet light duct fixtures may be used for residential and commercial applications. Residential units are often a single or double ultraviolet ray tube assembly. A common location for UV lights is in the return air duct just upstream of the air handler, **Figure 28-22**.

Near an UV light installed, any access door to the ductwork must be equipped with a safety shut-off switch that turns off the lamps if someone opens a door. When the lamps are on, the rays must cover the full cross-section of the duct to be effective.

UV lights may be installed in different locations, depending on the system and the objective of the installation. Return air duct installations are common and purify all return air before it is warmed or cooled and distributed throughout a building. During cooling operation, evaporator coils often condense moisture from the air. The moisture and air temperature can turn an evaporator coil into a breeding ground for mold and bacteria. For this reason, an HVAC system may need a UV light installed near its evaporator coil, **Figure 28-23**.

Allanson Inc.

Figure 28-22. A—The knobs at the end of the bulbs are used to turn and secure the bulbs in place in the assembly. B—The probe of this residential ultraviolet air purifier is placed in the return air duct.

9

Copyright Goodheart-Willcox Co., Inc.

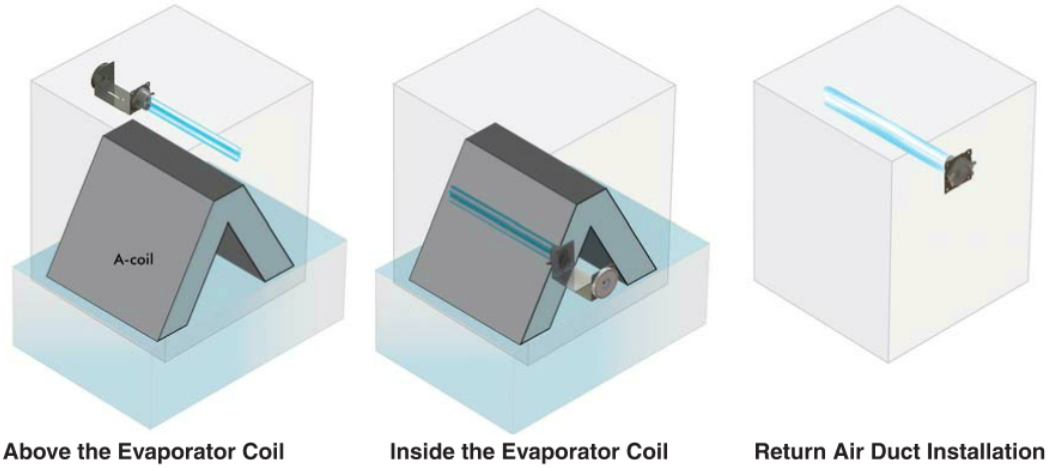

Field Controls, LLC

Figure 28-23. Reference manufacturer literature for recommended installation locations of UV lights.

Commercial HVACR systems may also use UV lights. Always check manufacturer recommended locations for a UV light before installation. Location may depend on the type of system and its orientation. A commercial HVAC rooftop unit installation is shown in **Figure 28-24**.

UV lights should be cleaned quarterly and replaced annually. Sealed lamps contain mercury, so caution must be taken.

Safety Note

Ultraviolet Operation

To verify that lights are in operation, check the lamp light indicator on the lamp knob. Never look directly at the lamps while they are illuminated.

Steril-Aire, Inc.

Figure 28-24. Technician installing a single UV light tube in an ultraviolet light assembly on a commercial unit.

Cleaning an Ultraviolet Air Treatment System

Ultraviolet lamps should be cleaned regularly to maintain an air treatment system. Cleaning recommendations are as follows:

1. Disconnect the power to the HVAC system.
2. Unplug the ultraviolet air treatment system cord from the electrical outlet and allow the lamps to cool for at least 15 minutes.
3. Rotate the lamp knob counterclockwise and gently pull the lamp knob to remove the lamp(s).
4. Holding only the lamp knob, wipe the lamp glass using a soft cloth with window cleaner applied to it. Do not touch the lamp surface with your hands. Use only the cloth.
5. To ensure that the lamp indicator continues to function, use a moistened cotton swab to gently remove any dust that may have collected between the lamp light indicator on the base and the black lamp base.
6. Wipe the lamps with a clean, dry cloth.
7. Put the clean lamps back into the unit base.
8. Plug the cord into the electrical outlet.
9. Verify the operation of the ultraviolet lamp(s) by viewing through the lamp light indicator on the lamp knob.
10. Reconnect the power to the HVAC system.

High-volume commercial systems often contain multiple lamps, which are used inside large air handling equipment. Units should be equipped with lamps

Copyright Goodheart-Willcox Co., Inc.

that do not produce ozone. These units provide both odor control and germicidal protection, **Figure 28-25**.

Lamp installation is needed in cooling coils and drain pan areas, since these are areas of high contamination. Use of UV lights in these locations can reduce the need for chemical cleaning agents. Additional light fixtures may be installed in the ductwork if heavy contamination exists there.

Lamps should remove 80–90% of the bacteria in domestic and commercial systems. They should remove at least 99% in hospital operating and recovery rooms. Systems that remove more than 99% of the bacteria are more expensive but may be required in some applications. Since these lamps are stronger than their commercial and residential counterparts, no human exposure to the light generated can be permitted. The useful life of a lamp varies with output, but may be as high as 9000 hours.

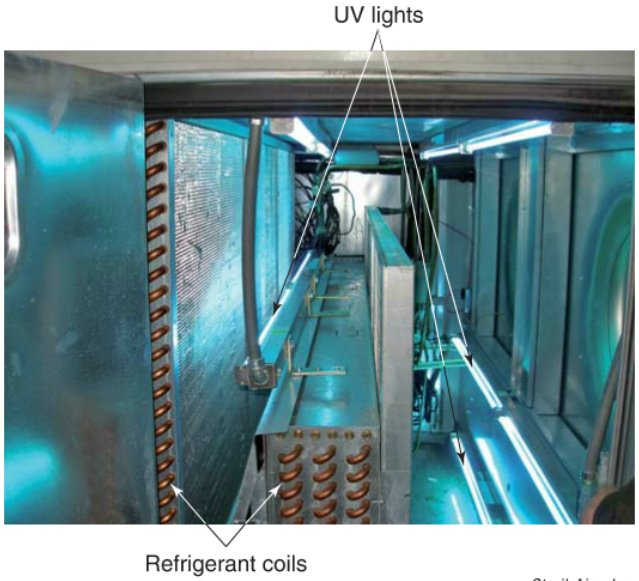

Steril-Aire, Inc.

Figure 28-25. This commercial air handler has rows of ultraviolet lights. Additional lights increase the system's ability to remove pollutants.

28.5 Indoor Air Quality Systems

In the past, natural air exchange through ***infiltration*** (leakage of air into a building) and ***exfiltration*** (air leaving a building through doors, windows, and other construction joints) was assumed satisfactory. Additional exchange of air was provided by the opening of doors and windows. Today, systems that provide ventilation and increase air quality are recommended due to the increasingly tight envelope of newer home construction, through increased insulation and sealing.

An important responsibility of a residential home's HVAC system is maintaining the quality of the air. Some residential homes are equipped with complete indoor air quality systems. An indoor air quality system is a controlled ventilation system that exhausts stale humid air and reduces pollen, dust, odors, and other pollutants. A complete system consists of numerous components, including an air conditioner, high-efficiency variable-speed furnace, humidifier, air purification system, UV germicidal light, and a heat recovery ventilator (HRV) or energy recovery ventilator (ERV). The components in this type of system are coordinated to ensure adequate ventilation, heating, and cooling, **Figure 28-26**.

To maintain indoor air quality, stale indoor air is exchanged with fresh outdoor air. However, while outdoor air may be fresh, it is often not at the same temperature and humidity as the conditioned indoor air. To reduce the energy loss that would be required to recondition incoming fresh air, HVAC systems route incoming fresh air through an HRV or an ERV. Heat recovery ventilators (HRVs) and energy recovery ventilators (ERVs) deliver fresh air into a home's interior and improve ventilation.

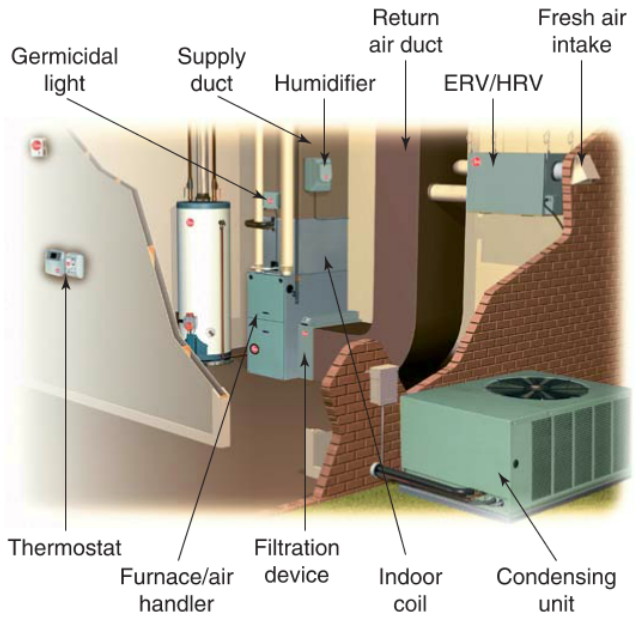

Rheem Manufacturing Company

Figure 28-26. The components of a complete home air quality system are shown here.

A ***heat recovery ventilator (HRV)*** is a heat exchanger that passes incoming fresh air and outgoing stale air through a series of parallel passages. As each airstream passes through the HRV, heat is exchanged, so the incoming air is closer to the temperature of the outgoing air, **Figure 28-27**.

Copyright Goodheart-Willcox Co., Inc.

Field Controls, LLC

Figure 28-27. Removing a side panel reveals this heat recovery ventilator's heat exchanger.

An ***energy recovery ventilator (ERV)*** is constructed and operates in the same manner as an HRV; however, an additional component allows ERVs to transfer heat and also humidity.

ERVs and HRVs are mechanical ventilation systems. HRV/ERVs are referred to as balanced systems. An HRV recovers some of the heat that would otherwise have been exhausted. Through the use of fans, HRV/ERVs provide a flow of fresh outdoor air into the house while exhausting out the same amount of stale indoor air. In a typical installation, fresh air is brought to the living room and bedrooms, and stale air is removed from bathrooms, the laundry room, and kitchen.

An ERV transfers both heat and moisture (usually the stale air in winter and the fresh air in summer) to the airstream that is drier. In colder climates, where heating is important, an HRV is appropriate. An ERV is used in warmer climates where humidity control is important. ERVs and HRVs are most commonly connected to the ductwork. Installations and arrangements may vary, **Figure 28-28**.

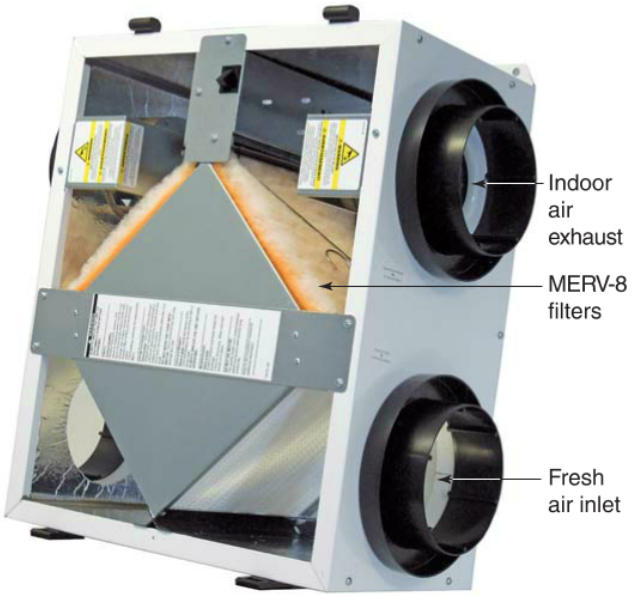

RenewAire

Figure 28-28. An energy recovery ventilator (ERV) used for residential and small commercial applications.

Copyright Goodheart-Willcox Co., Inc.

Summary

- ASHRAE Standard 62.1 provides guidelines for indoor air quality. The National Institute for Occupational Safety and Health (NIOSH) and the Occupational Safety and Health Administration (OSHA) regulate indoor air quality in the workplace.
- Indoor air quality is a measure of the combined effects of temperature, humidity, airflow, pollutants, number of occupants, and other factors in an enclosed space.
- A pollutant is a substance that is in some way a detriment to comfort, health, and a desirable environment.
- Solid pollutants include dust, fumes, smoke, bioaerosols, and asbestos. Gaseous pollutants include sulfur dioxide, carbon monoxide, carbon dioxide, nitrogen dioxide, ozone, radon, and organic vapors.
- The amount of time people spend indoors in combination with newer energy-efficient building standards and new synthetic building materials has made indoor air quality a growing concern. In residences, poor indoor air quality can be caused by decreased ventilation, fumes, moisture, the habits of occupants, and lack of maintenance of the home or HVAC system.
- IAQ problems in commercial settings can be caused by inadequate ventilation, inadequate filtration, work-related chemicals, cleaning chemicals, pesticides, mold, mildew, air pollutants being brought in from outdoors, or overcrowding. To maintain acceptable indoor environmental conditions, temperature, humidity, and airflow must be kept at acceptable levels.
- Exposure to poor indoor air quality can cause sick building syndrome (SBS), building-related illness (BRI), or multiple chemical sensitivity (MCS). Symptoms of SBS are building-related and disappear when the occupant leaves the building. BRI is caused by exposure to airborne agents that lead to a diagnosable illness. MCS results in abnormally high sensitivities and adverse reactions to low levels of chemicals, bioaerosols, and other irritants.
- To improve air quality, air can be cleaned with air filters, ultraviolet lights, or a combination of these measures.
- Numerous types of air filters are available, including disposable filters, washable filters, electrostatic filters, carbon filters, and HEPA filters. Disposable air filters consist of a filter material with a thin metal grille mounted in a cardboard frame. This type of filter generally has a low-to-medium efficiency rating. Washable air filters can be cleaned and reused.
- Electrostatic air filters ionize particles in the air. The particles are then drawn to collector plates that have an opposite charge. Most electronic air filters have a prefilter that blocks large particles. The electronic cell captures smaller particles.
- Carbon filters use activated charcoal to filter out particles and adsorb odors and fumes. Because of its odor-reducing abilities, this type of filter is commonly used in refrigerators and air conditioners.
- HEPA filters capture 99.97% of particles 0.3 microns or larger as they pass through the air purifier.
- The rating of an air filter's efficiency is a reflection of its ability to filter out particles of a certain size. Air filter efficiency can be measured by atmospheric dust spot efficiency tests, synthetic dust arrestance tests, and fractional efficiency tests.
- Ultraviolet lights are used to reduce bacteria, mold spores, viruses, and other microorganisms. UV lights are frequently installed in ductwork or near an evaporator coil and/or drain pan. In commercial applications, multiple UV bulbs are often used.
- Complete air quality systems combine air conditioning, heating/cooling, air purifier, UV germicidal light, and heat recovery ventilator or energy recovery ventilator. System components work together to ensure that the temperature, humidity, and overall air quality are maintained at the proper levels.

Copyright Goodheart-Willcox Co., Inc.

- A heat recovery ventilator (HRV) passes incoming fresh air and outgoing stale air through a series of parallel passages. As each airstream passes through the HRV, heat is exchanged, so the incoming air is closer to the temperature of the outgoing air. An energy recovery ventilator (ERV) operates in the same manner as an HRV but transfers humidity as well as heat.

Review Questions

Answer the following questions using the information in this chapter.

1. A standard that includes equipment and system requirements and minimum ventilation rates that result in acceptable indoor air quality is _____.
   A. ASHRAE Standard 52.2
   B. ASHRAE Standard 62
   C. ASHRAE Standard 90.1
   D. ASHRAE Standard 170
2. Which of the following is a gaseous pollutant?
   A. radon
   B. asbestos
   C. fumes
   D. bacteria
3. Carbon monoxide is _____.
   A. formed from the natural decay of uranium
   B. a nontoxic combination of carbon and oxygen
   C. a result of incomplete combustion of fuel
   D. photochemically produced in nature
4. Diminishing quality of indoor air is due to _____.
   A. reduced infiltration of outdoor air
   B. vapors released from new building materials
   C. Both A and B.
   D. Neither A nor B.
5. Fumes and volatile organic compounds (VOCs) are released from _____.
   A. paints
   B. adhesives
   C. synthetic building materials
   D. All of the above.
6. Which of the following statements is false?
   A. An individual with multiple chemical sensitivity reacts to small quantities of chemicals or bioaerosols.
   B. Complaints about temperature and humidity can offer clues to indoor environmental problems.
   C. People between the ages of five and sixty have an increased susceptibility to indoor air pollutants.
   D. Unvented gas appliances are a potential source of indoor air pollutants.
7. Two common types of disposable filters are _____.
   A. pleated media filters and carbon filters
   B. carbon filters and fiberglass panel filters
   C. fiberglass panel filters and HEPA filters
   D. pleated media filters and fiberglass panel filters
8. A(n) _____ filter is often used in refrigerators because of its ability to reduce odors.
   A. washable
   B. HEPA
   C. electrostatic
   D. carbon
9. Which of the following is a measure of air filter efficiency?
   A. Total volume of dirt collected.
   B. Total weight of dirt collected.
   C. Size of the largest particle that can be removed.
   D. Total weight of the particles that can be removed.
10. The most accurate of the techniques for measuring air filter performance is the _____.
    A. atmospheric dust spot efficiency test
    B. DOP HEPAP method
    C. fractional efficiency test
    D. synthetic dust weight arrestance test
11. In most electronic air cleaners, the larger particles and dirt are removed by a(n) _____.
    A. carbon filter
    B. electronic grid
    C. electronic cell
    D. prefilter
12. Ultraviolet lamps should be cleaned _____.
    A. daily
    B. quarterly
    C. every three years
    D. never

Copyright Goodheart-Willcox Co., Inc.

13. Common installation locations for ultraviolet lights for germicidal protection include the following, *except* _____.
    A. above the evaporator coil
    B. inside the evaporator coil
    C. in the combustion chamber
    D. in the return air duct
14. Fresh air is delivered into a home's interior by _____.
    A. energy recovery ventilators
    B. heat recovery ventilators
    C. humidifiers
    D. Both A and B.
15. An ERV is _____.
    A. a heat recovery ventilator
    B. not a heat exchanger
    C. used where only heat is important
    D. used where humidity control is important

Copyright Goodheart-Willcox Co., Inc.

CHAPTER 29 Air Distribution

Chapter Outline

29.1 Air Properties and Behavior
- 29.1.1 Weight
- 29.1.2 Heat in Air
- 29.1.3 Stratification

29.2 Air Circulation
- 29.2.1 Room Air Movement
- 29.2.2 Return Air Ducts

29.3 Basic Ventilation Requirements
- 29.3.1 Calculating Air Changes
- 29.3.2 Attic Ventilation
- 29.3.3 Basement Ventilation

29.4 Air Ducts
- 29.4.1 Types of Duct Systems
- 29.4.2 Duct Construction
- 29.4.3 Fiberglass and Other Nonmetal Ducts
- 29.4.4 Duct Dimensions
- 29.4.5 Registers, Diffusers, and Grilles
- 29.4.6 Dampers
- 29.4.7 Elbows

29.5 Duct Sizing
- 29.5.1 General Duct Design Guidelines
- 29.5.2 Duct Sizing Procedure
- 29.5.3 ACCA Manual D

29.6 Fans

29.7 Air Curtains

Learning Objectives

Information in this chapter will enable you to:

- Recall the properties of air that affect air distribution system design or installation.
- Categorize air circulation systems.
- Determine the basic ventilation requirements for a given space.
- Identify the basic types of air duct systems.
- Explain the relationships between air distribution and duct sizing and design.
- Understand the procedure for correctly sizing ducts.
- Identify types and classifications of fans.

Technical Terms

air curtain
airflow friction chart
aspect ratio
available static pressure (ASP)
axial flow fan
butterfly damper
device pressure losses (DPL)
diffuser
duct
ductboard
effective length
elbow
external static pressure (ESP)
forced draft
friction loss
friction rate
gable fan
grille
induced draft
Manual D
multiple-blade damper
oil canning
primary air
radial flow fan
register
return air duct
split damper
starting collar
throw
total effective length (TEL)
total pressure drop
unvented attic
vented attic
whole house fan

Review of Key Concepts

Reviewing these concepts from earlier chapters will help you understand new concepts presented in this chapter:

- Sensible heat is the heat energy absorbed or released to change the temperature of a substance. Heat that brings about a change of state with no change in temperature is called latent heat. (Chapter 4)
- Boyle's law states that the volume of a gas varies inversely to the pressure, provided the temperature remains constant. (Chapter 5)
- Charles' law states that at a constant pressure, the volume of a confined gas varies in direct proportion to the absolute temperature. (Chapter 5)
- Dew point is the temperature at which the current amount of moisture in the air would result in complete saturation of the air (100% relative humidity). At the dew point, moisture in the air begins to condense. (Chapter 27)
- Dry-bulb temperature is a measurement of the air's temperature without adjusting for the effect of humidity. Wet-bulb temperature is a measurement of the air's temperature that is adjusted for the effect of the air's humidity on evaporative cooling. (Chapter 27)
- Total air pressure is static air pressure (which is based on the density of the air) plus velocity pressure (which is the force exerted by the air's movement). (Chapter 27)
- A pitot tube measures total air pressure and static air pressure. Air passing through the nose of the pitot tube represents the total air pressure. (Chapter 27)

Introduction

Air-conditioning systems condition the air and distribute it. They are designed to distribute air to the proper space in amounts that provide the most comfort to the occupants of the conditioned space.

When a radiator or a room convector system is used, air distribution is simple. An example of this type of air distribution is a radiator. The heat exchange units are located along the outside walls. During the heating season, heated air rises from the radiator along the wall. It mixes with the cold air adjacent to the cold wall. Natural air currents (convection) then move the air mixture throughout the room. Many heating systems use motor-driven fans to help circulate the air.

A good air-conditioning system delivers clean air to the space being conditioned. Proper ventilation can also help control humidity levels in indoor air. Uncontrolled humidity from bathrooms, laundry rooms, and shower rooms can cause condensation on windows and walls. Proper ventilation can also control odors from cooking, smoking, or other household activities.

Video

- Duct Systems

29.1 Air Properties and Behavior

Before designing or installing an air distribution system, the basic properties of air must be understood. Failure to consider the behavior of air will result in a poorly designed system. Some properties to consider are the weight of air, the manner in which air absorbs heat, and the way air separates into layers (stratification).

29.1.1 Weight

Air has definite weight. Although they are invisible, the gases that compose air have a definite mass and, therefore, weight. **Figure 29-1** lists the density of air under various temperature and relative humidity conditions.

One pound (0.454 kg) of dry air at 70°F (21°C) at standard atmospheric pressure occupies a space of 13.35 ft^3 (0.378 m^3). If there is 50% relative humidity, one pound of air and moisture mixture takes up 13.51 ft^3 (0.383 m^3) of space. Because air is a gas, it obeys the gas laws (Boyle's and Charles'). Therefore, as the temperature rises or the pressure drops, air expands to fill a greater space. Also, as relative humidity increases, each pound of air will occupy a greater space. Each water molecule weighs less than each nitrogen or oxygen molecule. A gas made up only of water molecules would weigh a little more than half as much as an equal volume of dry air, provided that the pressure remains constant.

29.1.2 Heat in Air

Two types of heat can be added or removed from air—sensible heat and latent heat. When sensible heat is added into air, an increase of dry-bulb temperature occurs. Likewise, when sensible heat is removed, there is a decrease in dry-bulb temperature.

Latent heat in air is the heat or energy stored within the moisture in the air. When water vapor condenses, it changes from a vapor to a liquid. This process releases heat from the water. The latent heat in the air is the amount of heat that would be released if all of the moisture in the air condensed out of the air.

Since colder air is not capable of holding as much moisture as warmer air, the air is much drier during the winter season. A humidifier adds moisture to the air. Moisture is commonly added while air is being heated to bring the air as close as possible to the human comfort level, or approximately 70°F (21°C) db and 30% rh during winter months.

Relative humidity is much different from absolute or specific humidity. Relative humidity compares the air being treated to that same air that is completely saturated (100% relative humidity). Saturation is the point where no more moisture can be added to the air. It is the maximum amount of moisture that the air is capable of holding.

For example, assume that a volume of air at 80°F (27°C) is capable of holding 0.022 lb of moisture per pound of air or 0.022 lb/lb when the air is saturated. If this volume of air is actually holding only 0.011 lb/lb of moisture, then the air has a relative humidity of 50% (0.011 lb/0.022 lb × 100 = 50%). This air at this moment has only half the amount of water vapor that it is capable of holding.

Absolute humidity is the actual amount of moisture in the air, which would be the 0.011 lb/lb of moisture in the previous example. The moisture content is often expressed in grains of moisture per pound of air. There are 7000 grains for every pound of moisture. Thus, the absolute humidity of the air from the previous example would be 77 grains/lb (0.011 lb × 7000 grains/lb).

Another component that will add latent heat into air is an evaporative cooling system, typically

Density and Volume of Air						
Air Temp	Dry Air		50% rh		100% rh	
(°F)	Density (lb/ft³)	Volume (ft³/lb)	Density (lb/ft³)	Volume (ft³/lb)	Density (lb/ft³)	Volume (ft³/lb)
0	0.08635	11.58	0.08632	11.585	0.08628	11.59
50	0.07786	12.84	0.0774	12.915	0.0769	12.99
70	0.07492	13.347	0.074	13.51	0.0731	13.68
100	0.0709	14.10	0.06856	14.585	0.06635	15.07
120	0.0685	14.60	0.0643	15.55	0.0606	16.50
150	0.0652	15.30	0.0565	17.70		
200	0.0600	16.70				

Goodheart-Willcox Publisher

Figure 29-1. The density of air at various temperatures and relative humidity. Water vapor weighs less than an equal volume of dry air.

Copyright Goodheart-Willcox Co., Inc.

used in the southwest region of North America during the summer months. An evaporative cooling system adds moisture into the air to give a cooling effect. Because of the excessive sensible heat and the lack of moisture in the air, water will easily vaporize as it is introduced into the air. This will cause a cooling effect by increasing the rh level of the air while at the same time lowering its dry-bulb (sensible) temperature. Taking the 100°F db and 10% rh air and adding moisture brings the air closer to the human comfort levels for summer, which is about 75°F (24°C) db and 50% rh.

The evaporator coil in a comfort cooling system removes both sensible and latent heat from the air in regions that maintain higher relative humidity levels during summer months. As air circulates over the evaporator coil, the sensible temperature is reduced to the dew point temperature of the air. When the dew point temperature is reached as the air comes in contact with the evaporator coil, the moisture in the air condenses and is sent down a drain system. For each pound of moisture removed from the coil, about 970 Btus will be removed from the air. As both sensible and latent heat decreases, the air will move closer to its indoor target summer design db temperature of 75°F (24°C) and a relative humidity of 50%.

29.1.3 Stratification

In a given space with no drafts, warm air tends to rise and cold air tends to settle. If air is not deliberately moved, the air will settle at different heights according to its temperature. This condition is called stratification. To prevent stratification, the air in an occupied space must be kept moving.

If thermostats or humidistats are placed too high in a room, they may be exposed to air that is warmer and more humid than the air felt by the occupants. If thermostats or humidistats are placed too low in a room, they may be exposed to air that is cooler and less humid than the air felt by the room's occupants. For this reason, it is important that these devices be positioned at the proper level.

Proper placement of supply and return duct outlets is also an important factor in preventing stratification. Poor placement of supply duct outlets or return duct inlets could cause air to move only in certain parts of the room while becoming stagnant (not moving) in others. Furnishings can also obstruct air movement. To minimize the airflow blockage caused by furnishings, duct outlets are often located high up in the room or in the ceilings. In these locations, the outlets may be concealed or given an attractive appearance. See **Figure 29-2**.

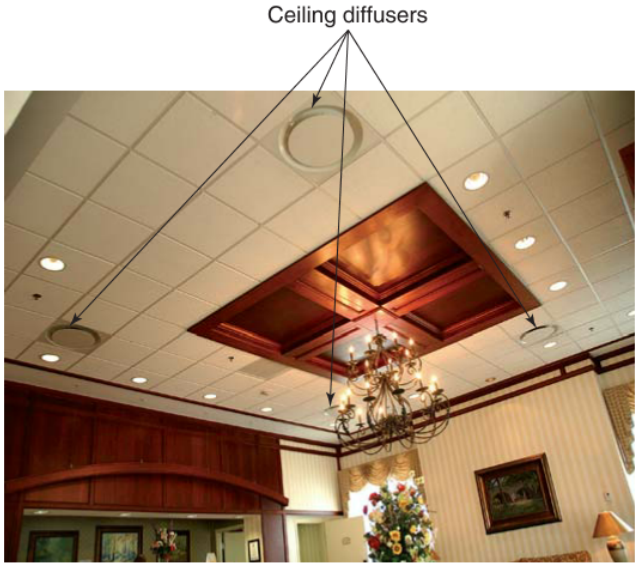

Raymon-Donco Corp.

Figure 29-2. These ceiling-mounted air diffusers are barely noticeable. Diffusers are placed around the room to prevent air stratification.

29.2 Air Circulation

In warm air heating, three basic systems are used to circulate the air:

- Gravity.
- Intermittent forced-air.
- Continuous forced-air.

The gravity system is no longer popular. Too much energy is lost before the conditioned air reaches the room being heated. Most installations use an intermittent forced-air system, in which a thermostat controls the blower fan in the air handler or furnace plenum chamber. The thermostat turns on the blower whenever sensed temperature becomes too far above or below the setpoint. Continuous forced-air systems are growing in popularity. These provide a more constant temperature in rooms.

Air distribution systems designed to provide cooling as well as heating may need the ability to move different volumes of air depending on mode of operation. A cubic foot of cooled air will not change room temperature as much as a cubic foot of warmed air. This is because of the greater temperature differences produced. Warmed air comes out of the duct many degrees warmer than the room air it is replacing. Cooled air is not all that much cooler than the room air it is replacing. Therefore, greater quantities need to be moved into the room to achieve the desired effect. In average conditions, a 30% to 50% airflow increase is

Copyright Goodheart-Willcox Co., Inc.

required. Either of the following two methods can be used to increase the airflow:

- Use of a two-speed or variable speed blower.
- Use of an adjustable pulley system for belt-driven blowers. A larger motor pulley is used during the heating season and a smaller pulley is used during the cooling season.

29.2.1 Room Air Movement

Air entering a conditioned space through ducts must circulate without causing annoying drafts. Air circulation depends on the number and size of the duct supply outlets and return inlets. It also depends on the velocity of the air moving through the supply outlets.

Air delivered to the room from the supply duct is called ***primary air***. Primary air pushes against and mixes with air already in a room. The outlet velocity is the speed of the air as it leaves the duct outlet. The distance the air travels from the duct outlet before it slows to 50 fpm is called the ***throw***.

The overall size of the supply outlet is not important. The total area of the air openings in the fixture determines the fixture's capacity. The spread of the air that leaves the fixture is important.

29.2.2 Return Air Ducts

Airflow through ***return air ducts*** is almost always caused by the pulling action of a fan or blower. If the return airflow does not match the airflow into a room, the flow of air will not be properly balanced.

If there is more return air than supply air, the room will have a negative pressure. This condition is known as being starved for air. Rooms that are starved for air are cold during the heating season and warm during the cooling season. To correct the problem, more supply air must be delivered to the room.

Return duct inlets should be placed in the stratified (stagnant) air zone of a room. During the heating season, return air ducts would be located near the floor. During the cooling season, such ducts should be located near the ceiling. Ideally there would be two return duct inlets—one near the ceiling and one near the floor. The higher duct would be closed during the heating season, and the lower one closed during the cooling season. However, due to expense and practicality, most homes have only one return duct inlet. Therefore, placement of the return duct inlet is determined by the type of construction in a building or whether the primary usage will be cooling or heating. In all cases, return duct inlets should be located at the farthest distance from the supply duct outlets, **Figure 29-3**.

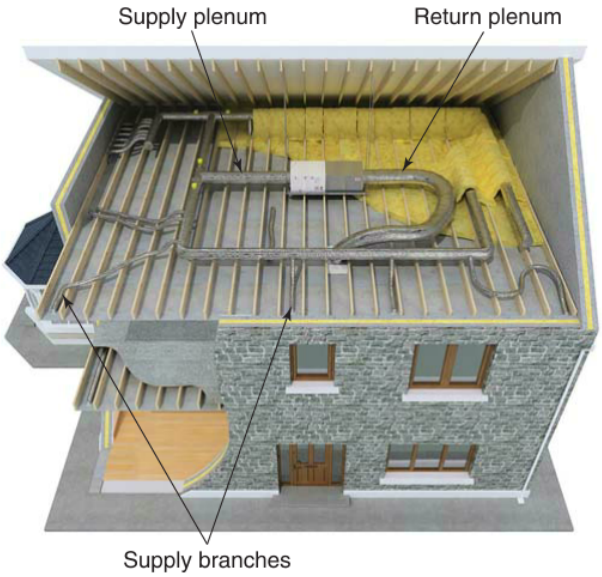

Hi-Velocity Systems

Figure 29-3. This small duct, high-velocity air distribution system shows supply air going to the inside perimeter of the building and the return air originated from the center of the building.

29.3 Basic Ventilation Requirements

Air normally contains about 21% oxygen. People need a certain amount of oxygen in the air in order to breathe comfortably. Depending how far below this level the oxygen content falls, people can experience a variety of symptoms including discomfort, breathing difficulty, drowsiness, disorientation, unconsciousness, and even death.

If a room is tightly sealed, anyone in that room will slowly consume the oxygen. As the oxygen is consumed, the amounts of carbon dioxide, water vapor, and various impurities increase. As the oxygen content in the air decreases and the carbon dioxide levels increase, the room begins to feel stuffy. Continued exposure to the oxygen-deficient air would cause people to experience progressive symptoms, beginning with drowsiness and ending in unconsciousness and death. For these reasons, living spaces must have air with a sufficient oxygen content. It is very important that fresh air be admitted to provide necessary oxygen. The air must also be kept at a reasonable temperature.

In the past, fresh air entered the space by infiltration through door and window openings and cracks in the structure. However, modern construction techniques reduce this air leakage. As a result, in modern homes and workplaces, an air-conditioning system must furnish fresh air. Modern air-conditioning systems should have a controlled fresh-air intake. This

Copyright Goodheart-Willcox Co., Inc.

fresh air is conditioned and mixed with the recirculated air before it reaches the room, **Figure 29-4**.

Fresh air can be brought into a building using a fresh air duct connected between outdoors and the return air ducts. When the air handler's blower is operating, fresh air can be drawn in and conditioned before being circulated through the conditioned space. A screen or mesh at the inlet to the fresh air duct prevents insects and other critters from entering. This fresh air duct connecting outdoors and the return air duct is usually regulated by a motorized damper or a barometric damper.

Another method of bringing in fresh air from the outside uses a heat recovery ventilator (HRV) or energy recovery ventilator (ERV). These devices have four air duct connections: fresh air inlet, fresh air outlet, exhaust air inlet, and exhaust air outlet. Two ducts connect to outdoors. One brings in fresh air, and the other exhausts stale indoor air to the outdoors. HRVs and ERVs transfer heat between incoming fresh air and outgoing exhaust air. The heat transfer helps to maintain steady indoor temperatures. HRVs and ERVs provide fresh air that has the least effect on indoor temperature. These units circulate air using a fan. HRVs and ERVs are covered in Chapter 28, *Air Quality*.

Some conditioned air leaves a building through exfiltration. Exhaust fans in bathrooms and kitchens also remove conditioned air. It is best to bring in

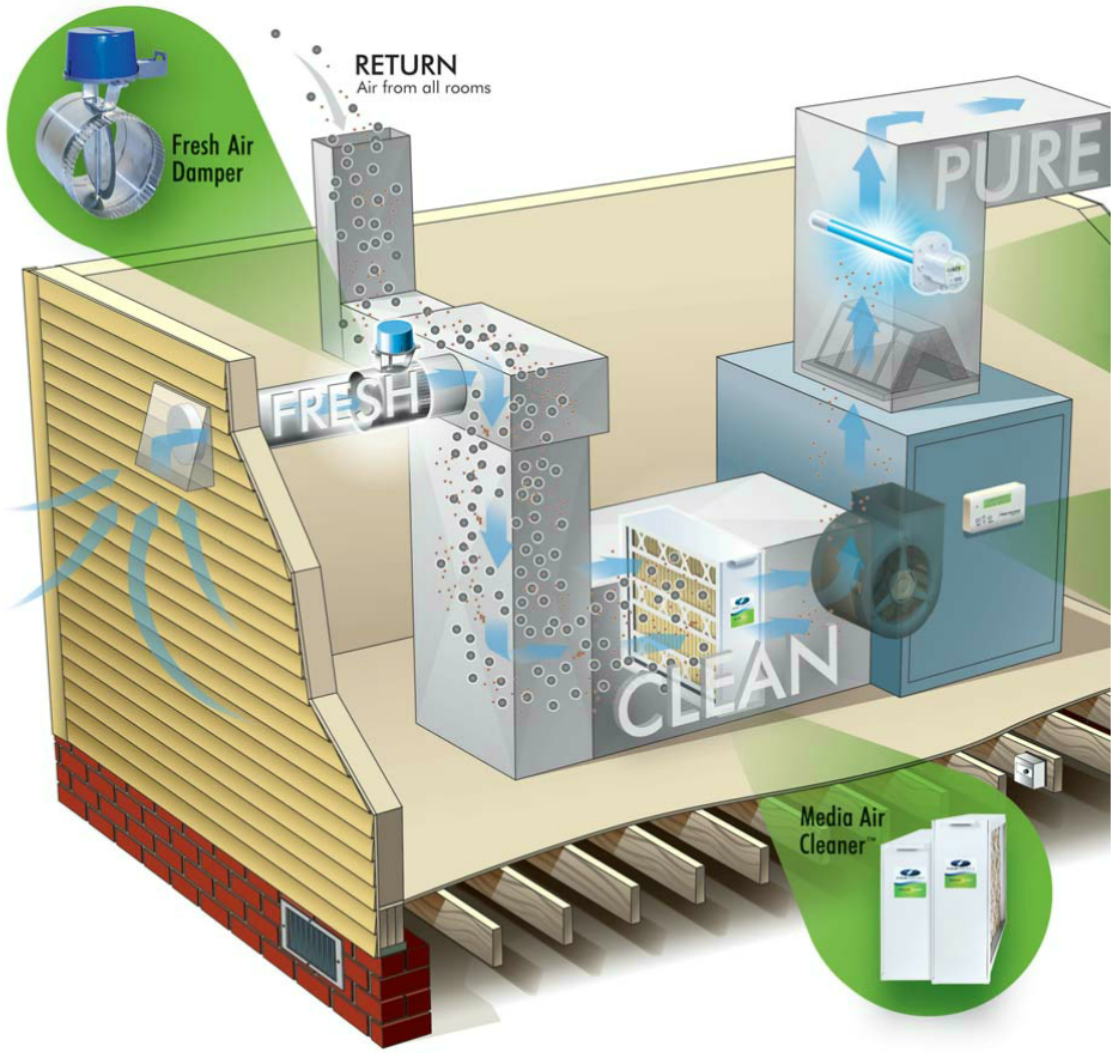

Field Controls, LLC

Figure 29-4. A duct to the outdoors is regulated by an automated damper. When the air handler is circulating air, the damper opens to allow fresh air to flow through the air filter and air handler and past the plenum's UVG light. Fresh air is cleaned, purified, and circulated into the conditioned space.

Copyright Goodheart-Willcox Co., Inc.

replacement fresh air through an air system, where it can be cleaned and cooled or heated. Bringing in replacement air through an air-conditioning system also ensures that a definite amount of fresh air (makeup air) is brought in to provide a healthy oxygen level.

When fresh air is brought in by the air-conditioning system, a positive pressure can be maintained in the building to help keep out airborne dirt, dust, and pollen. Positive pressure is higher than atmospheric pressure. Negative pressure is below atmospheric pressure. In most cases, a negative pressure should be avoided, because it reduces the efficiency of exhaust fans and of fuel-fired appliances (furnaces, water heaters, etc.). Maintaining a negative pressure also tends to bring in outside contaminants.

Certain building areas should have slightly less positive pressure than the rest of the building. A lower positive pressure (10% to 15% less than the rest of the building) reduces the spread of odors. Such areas would include kitchens, bathrooms, and industrial areas where fumes are produced.

29.3.1 Calculating Air Changes

Air changes can be calculated by counting the people in a building or by calculating building volume. It is always necessary to choose the process that produces the greater number of changes per hour.

To calculate fresh air requirements and air changes per hour, the following factors must be considered:

- Number of occupants.
- Use of the space.
- Dry-bulb temperatures.
- Relative humidity.
- Amount of fresh air admitted by infiltration.
- Efficiency of the unit.

A system in a cooling mode should provide at least 15 cfm (cubic feet per minute) of air per person. This air exchange rate will provide enough oxygen and will remove carbon dioxide. In the example below, air changes are calculated by the number of occupants.

Formula for calculating required air exchange rate:

$$\text{Required air exchange rate} = \text{Number of occupants} \times 15 \text{ cfm}$$

Formula for calculating the time required for complete air exchange:

$$\text{Time for complete air exchange} = \frac{\text{Size of space}}{\text{Air exchange rate}}$$

Formula for calculating air exchanges per hour:

$$\text{Air exchanges per hour} = \frac{60 \text{ min}}{\text{Time for one exchange}}$$

Example:

Six people occupy a 10,000 ft^3 space. Calculate the necessary air exchange rate, the time required for one complete air exchange, and the number of air exchanges per hour.

Solution:

Required air exchange rate:

$$6 \times 15 \text{ cfm} = 90 \text{ cfm}$$

Time for complete air exchange:

$$\frac{10{,}000 \text{ ft}^3}{90 \text{ cfm}} = 111 \text{ min}$$

Air exchanges per hour:

$$\frac{60 \text{ min}}{111 \text{ min}} = 0.54$$

Based on the number of occupants, the required air exchange rate would be 90 cfm. At this rate, it would take 111 minutes (1.85 hours) to completely replace the air in the space, which translates to a little more than one-half of a complete air exchange per hour.

An air distribution system can produce positive or negative pressure in a building. A positive pressure eliminates infiltration of air from outside or from other spaces and ensures that all air entering a building can be filtered before reaching the occupied space. To produce a positive pressure, a special air intake draws outside air into the ventilation system. Negative pressure increases the infiltration at windows and doors. Air that enters by infiltration is untreated and may be dirty.

Residential homes that use fuel-burning appliances need a sufficient amount of air for proper combustion. This may not just be a gas-fired or oil-fired furnace but can also include gas stoves, gas clothes dryers, gas water heaters, and other appliances. For proper combustion, all fuel-burning appliances need sufficient amounts of oxygen from the air. If these appliances draw in combustion air from the inside of the house, the combustion exhaust leaving through the chimney might create a slightly negative pressure inside the house. See **Figure 29-5**.

Ventilation is usually based on air changes per hour for a conditioned space. Building volume can be used to calculate air changes per hour. For example, in a 1000 ft^3 space, three changes per hour would mean 3000 ft^3/hour or 50 cfm. Three changes every hour is the minimum for a residence during the heating

Copyright Goodheart-Willcox Co., Inc.

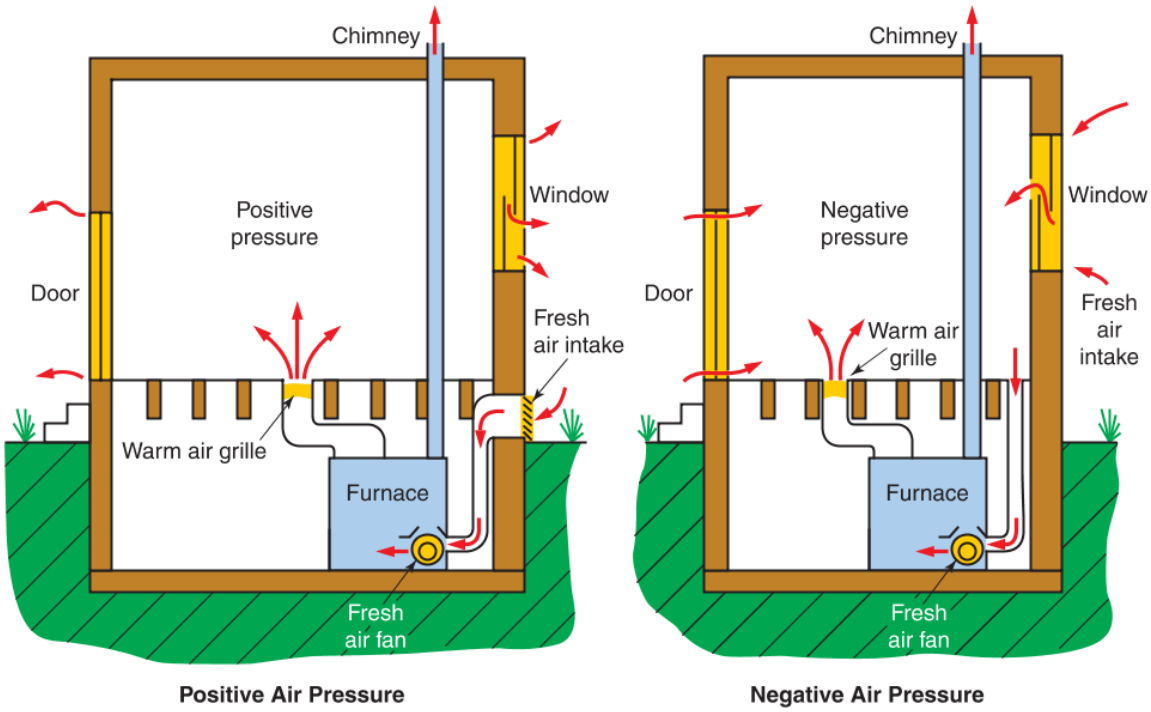

Goodheart-Willcox Publisher

Figure 29-5. Airflow into and out of a building during the heating season. The red arrows in the diagram indicate airflow. If combustion air is taken from inside the house, negative air pressure may result.

season. As many as 12 changes per hour are recommended for cooling large public assemblies, such as crowded auditoriums. **Figure 29-6** shows typical air changes for both the heating and cooling seasons.

It is good practice to keep air blowers running all the time. They provide good ventilation to all parts of a building. Variable speed blowers may be used to provide more air movement when the heating or cooling system is running and less air movement when those systems are off.

An adequate air supply is the best way to control comfort. Body comfort is controlled by evaporation, convection, radiation, and respiration. Therefore, the temperatures of the walls, floors, and ceilings must be controlled. Enough air must also be supplied to promote good respiration, evaporation, and convection.

Typical Air Changes		
Type of Space	Air Changes per Hour	
	Heating	Cooling
Homes	3–6	6–9
Office spaces	5–8	6–12
Public assemblies	5–10	6–12

Goodheart-Willcox Publisher

Figure 29-6. The number of air changes recommended per hour for various types of occupancy.

Code Alert

Ventilation Recommendations

ASHRAE Standard 62 provides recommendations regarding ventilation. It provides basic equipment and system requirements and minimum ventilation rates that should result in indoor air quality that is acceptable to human occupants.

29.3.2 Attic Ventilation

There are two types of attics: unvented and vented. An ***unvented attic*** is closed off and essentially made into part of the conditioned space. The underside of the roof is usually heavily insulated to prevent heat loss and heat gain. However, many of the attics in North America are vented. A ***vented attic*** has vents or air openings between its inside and the outside. In the summer, these openings are intended to allow hot air to escape. In winter, the openings are intended to allow moisture to flow out and to maintain a cold attic temperature (to prevent ice dams from forming).

Copyright Goodheart-Willcox Co., Inc.

A vented attic space must be properly ventilated. If not, an attic may develop a mildew odor and could become extremely hot. It could reach 150°F (66°C) on a hot summer day. This would make it difficult to maintain comfortable temperatures in the rest of the structure.

Attics are commonly ventilated using louvers or vents. Often a building will have upper and lower vents to allow the flow of natural convection. Upper vents may be ridge vents, gable vents, or different types of ventilators installed through the roofing. Lower vents are usually soffit vents. These methods allow fresh air to enter and internal air to escape. At the same time, through the inclusion of louvers and screens in these openings, water, insects, and other objects are prevented from entering the vented attic, **Figure 29-7**.

Ideally, a vented attic will have soffit vents and at least one of the other types of upper vents (gable, ridge, or ventilator). This arrangement takes advantage of natural convection, allowing hot air to flow out the upper vents and cooler air to flow in through the soffit vents.

Since not all buildings are constructed to have soffit vents, other methods may be employed to promote airflow. Fans may be used to increase the circulation of air through a vented attic. A ***gable fan*** is a fan installed at a louvered gable opening of a vented attic. It can be arranged to either blow into the attic or draw air out of the attic. If blown inward, a gable fan pressurizes the attic, so that hot air flows out of the vents, as cooler air is blown in through the gable. If arranged to blow outward, a gable fan draws hot air out of the attic, and cool air is drawn in from the other vents.

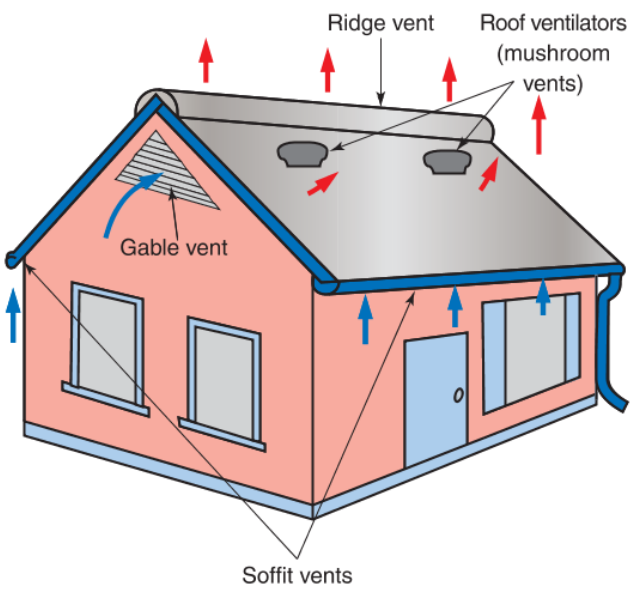

Goodheart-Willcox Publisher

Figure 29-7. Ridge vents, gable vents, soffit vents, and roof ventilators all work together to promote air circulation in a vented attic.

Another method of mechanically venting an attic uses a whole house fan. A ***whole house fan*** is a high-volume fan that is placed between the conditioned space and a vented attic. It may also be referred to as an *attic fan*. A whole house fan is generally used when outdoor air is cool but indoor air is warm or stuffy. This may occur in evenings after a sunny day during certain seasons. Occupants open the windows of the building and then turn on the whole house fan. The whole house fan blows indoor air into the attic. This removes the warm, stuffy air from the conditioned space and blows the hot air out of the attic. Cool air from outdoors is drawn into the building by the whole house fan.

Thinking Green

Free Cooling by Whole House Fan

During certain seasons under the right conditions, a whole house fan provides a building with free cooling. When outdoor air is cool and indoor air is warm or stuffy, a whole house fan can blow out the hot air and draw in the cool air. Running just the whole house fan (instead of the blower and compressor) is an economical way of managing indoor temperature.

Whole house fans have large capacities, ranging from 1000 to 4000 cfm. It is desirable to have a fan large enough to make the needed air changes. A complete change of air should be made in the attic every 8 to 10 minutes.

Example:

An attic measures 30′ × 60′ with an 8′ ceiling. An exhaust fan with a capacity of 1440 cfm is installed. Calculate the number of air changes per hour.

Solution:

$$\text{Volume of attic} = \text{Length} \times \text{Width} \times \text{Height} = 60' \times 30' \times 8' = 14{,}400\ \text{ft}^3$$

$$\text{Time for complete air change} = \frac{\text{Attic volume}}{\text{Fan capacity}} = \frac{14{,}400\ \text{ft}^3}{1440\ \text{cfm}} = 10\ \text{min}$$

$$\text{Air changes per hour} = \frac{1\ \text{hour}}{\text{Time for complete air change}} = \frac{60\ \text{min}}{10\ \text{min}} = 6$$

Copyright Goodheart-Willcox Co., Inc.

The fan described in this example would completely change the air in the attic every ten minutes, providing six air changes per hour.

29.3.3 Basement Ventilation

Because basements tend to be cool and damp in the summer, mold and odors in those spaces are frequent problems. How to handle this situation is highly dependent on outdoor air conditions.

If outdoor air is dry, an exhaust fan can be installed in the basement to reduce dampness and mold growth. The fan should remove air from the floor level of the basement and exhaust it outdoors. One method of installing an exhaust fan is to remove a basement window pane and install the fan with an inlet duct leading down to floor level. However, running just an exhaust fan in this way could lead to negative pressure in the building. Also, if any resulting incoming air is hot, indoor temperature could rise. Remember that hot air naturally rises. Hot replacement air from outdoors that enters the basement could rise and affect temperature on the ground floor and upstairs.

If outdoor air is hot and humid, exhausting the basement could just replace the cool, damp air with hot, damp air. This would be a net loss and not solve the problem of high humidity. If the basement is already tied in with a forced-air cooling system, the air conditioning may be able to reduce the humidity. However, a cooling cycle may not run for a long enough period of time to reduce humidity levels in a basement. If this is the case, consider running a dehumidifier in the basement. This should reduce humidity and help to prevent mold growth.

While basement ventilation is necessary in many cases, every aspect and contributing factor to a given situation should be considered. These include outdoor air temperature, outdoor air humidity, type of HVAC system in the building, type of construction of the building, power consumption levels, initial investment costs of each available option, long-term cost of operating each option, and desired basement climate.

29.4 Air Ducts

Ducts are passageways that circulate and distribute air to and from a conditioned space. Ducts work on the principle of air pressure difference. If a pressure difference exists, air moves from higher pressure areas to lower pressure areas. The greater this pressure difference, the faster the air will flow.

Ducts can be made of many different materials. They are usually constructed from sheet metal or some other noncombustible material. Air pressure in the ducts is small, so materials with a great deal of strength are unnecessary. Air ducts were originally made of thin, tinned sheet steel. Later, galvanized sheet steel, aluminum sheet, and insulated ducts were developed.

Ducts can have round, square, rectangular, or oval cross-sections. Round ducts are more efficient because less material is needed for the same capacity as square or rectangular ducts. The round design also reduces resistance to airflow. Since round ducts have less surface area, the air inside the ducts is less prone to heat loss or heat gain. However, square or rectangular ducts conform better to building construction. They fit into walls and ceilings better than round ducts. Also, it is easier to install rectangular ducts between joists and studs than it is to install round ducts with the same capacity, **Figure 29-8**.

Tables are available that compare the carrying capacities of rectangular and round ducts. There are several round duct equivalent sizes from which to choose. The one selected depends on the one-side dimension desired. For example, ducts 11″ high may be desired to improve appearance. They may be needed to fit in between joists (a 14″ distance), **Figure 29-9**.

29.4.1 Types of Duct Systems

Air ducts deliver air to a room or rooms. They then return the air to the heating (furnace) or cooling (evaporator) system. **Figure 29-10** shows a typical

9

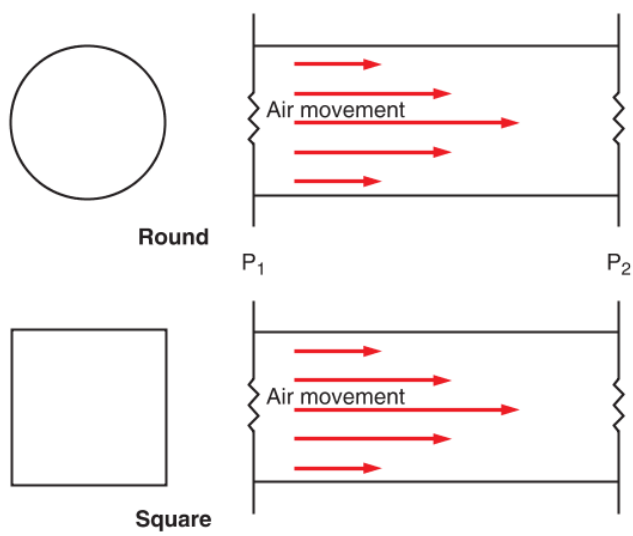

Goodheart-Willcox Publisher

Figure 29-8. Duct shapes can vary. As indicated by the red arrows, the closer the air is to the duct wall, the slower the flow. P_1 and P_2 indicate pressure along a duct. To create airflow, P_1 must be greater than P_2.

Copyright Goodheart-Willcox Co., Inc.

Length of One Side of Rectangular Duct (a), in.																					
Lgth Adj	6	7	8	9	10	11	12	13	14	15	16	17	18	19	20	22	24	26	28	30	Lgth Adj
6	6.6																				6
7	7.1	7.7																			7
8	7.6	8.2	8.7																		8
9	8.0	8.7	9.3	9.8																	9
10	8.4	9.1	9.8	10.4	10.9																10
11	8.8	9.5	10.2	10.9	11.5	12.0															11
12	9.1	9.9	10.7	11.3	12.0	12.6	13.1														12
13	9.5	10.3	11.1	11.8	12.4	13.1	13.7	14.2													13
14	9.8	10.8	11.4	12.2	12.9	13.5	14.2	14.7	15.3												14
15	10.1	11.0	11.8	12.6	13.3	14.0	14.6	15.3	15.8	16.4											15
16	10.4	11.3	12.2	13.0	13.7	14.4	15.1	15.7	16.4	16.9	17.5										16
18	11.0	11.9	12.9	13.7	14.5	15.3	16.0	16.7	17.3	17.9	18.5	19.1	19.7								18
20	11.5	12.6	13.5	14.4	15.2	16.0	16.8	17.5	18.2	18.9	19.5	20.1	20.7	21.3	21.9						20

Reprinted with permission of the American Society of Heating, Refrigerating, and Air-Conditioning Engineers, Atlanta, Georgia

Figure 29-9. To determine the sizes of rectangular ducts needed to equal the carrying capacity of round ducts, find the diameter of the round duct in the chart. Then, find one side of the rectangular duct by reading upward toward the top of the chart. Find the other side by reading left to the "Lgth Adj" column. See the *Appendix* for an expanded chart.

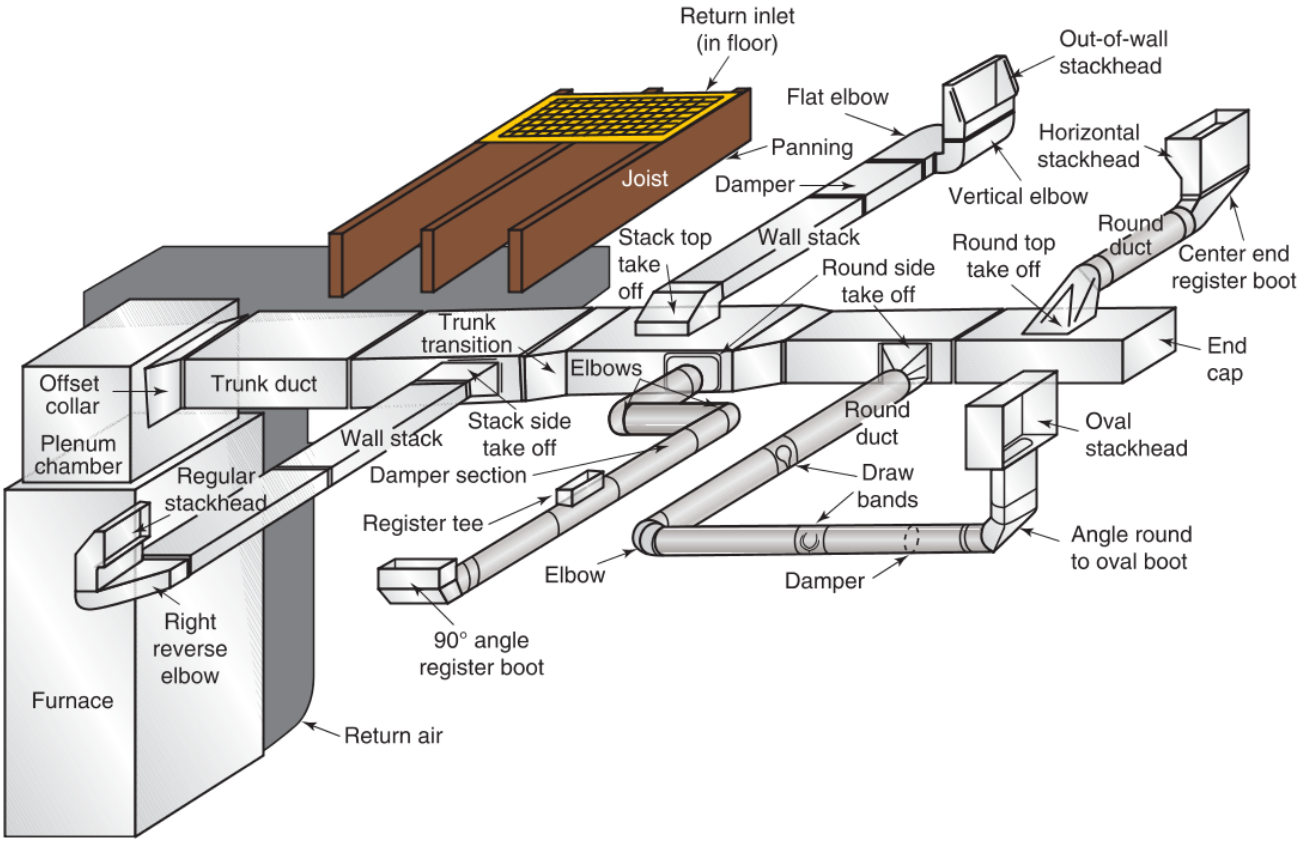

Reprinted from Air Conditioning Contractors of America's [ACCA] Basic Installation Manual, by permission of ACCA

Figure 29-10. Residential layout showing most sheet metal parts used in a duct system.

Copyright Goodheart-Willcox Co., Inc.

residential air duct system. There are several types of supply duct systems. Some installations are a combination of different types. Supply duct systems can be categorized as follows:

- Radial duct system.
- Extended plenum system.
- Reducing trunk system.
- Perimeter loop system.
- SDHV (small duct, high-velocity) system.

Duct systems may be installed in basements, crawl spaces, attics, false ceilings, and other structural cavities. Ducts may be installed in concrete floors (slabs) of homes without basements. Ducts are usually insulated if the duct system is in a crawl space or attic. Otherwise, heat gain or loss would be too great, depending on the season. **Figure 29-11** shows the basic designs of conventional supply duct systems.

In basements, the main duct is run across and just under the floor joists. Branch ducts are then run between the joists to the diffuser openings. Return ducts usually use the joists and the floorboards for three sides of the branch ducts (panned joist space). Then the main return duct is run alongside the conditioned air duct.

Ducts installed in a concrete slab are usually made of metal, plastic, or ceramic. The ductwork can be laid out and the slab poured over it. The branch ducts usually connect to a perimeter duct. Diffusers are connected to the perimeter duct at intervals along the floor. Downflow furnaces are used with perimeter loop duct systems. In a downflow furnace, return air enters at the top of the furnace and supply air exits at the bottom of the furnace.

Supply and return air ducts and branches are often secured to a building's structural components. This can be done a variety of ways. Any method used should avoid constricting airways. Common supplies used to secure ducts in place include straps made of metal, iron, woven polypropylene, or wire, **Figure 29-12**.

Some buildings are designed with unit ventilators. The ventilator removes older stale air and replaces it with fresh oxygenated air by automatically drawing air from the conditioned space. The ventilator simultaneously brings in makeup air from the outside. These two streams of air pass by each other. In doing so, heat is transferred into the makeup air as it enters the building.

False ceilings are often used to conceal piping, wiring, heat exchangers, and ducts. The false ceiling may have holes to allow movement of conditioned air into the room below. Diffusers may also be used. Space between the false ceiling and the real ceiling may be used as a conditioned return air plenum chamber. Some systems use heated panels to provide radiant heating. See **Figure 29-13**.

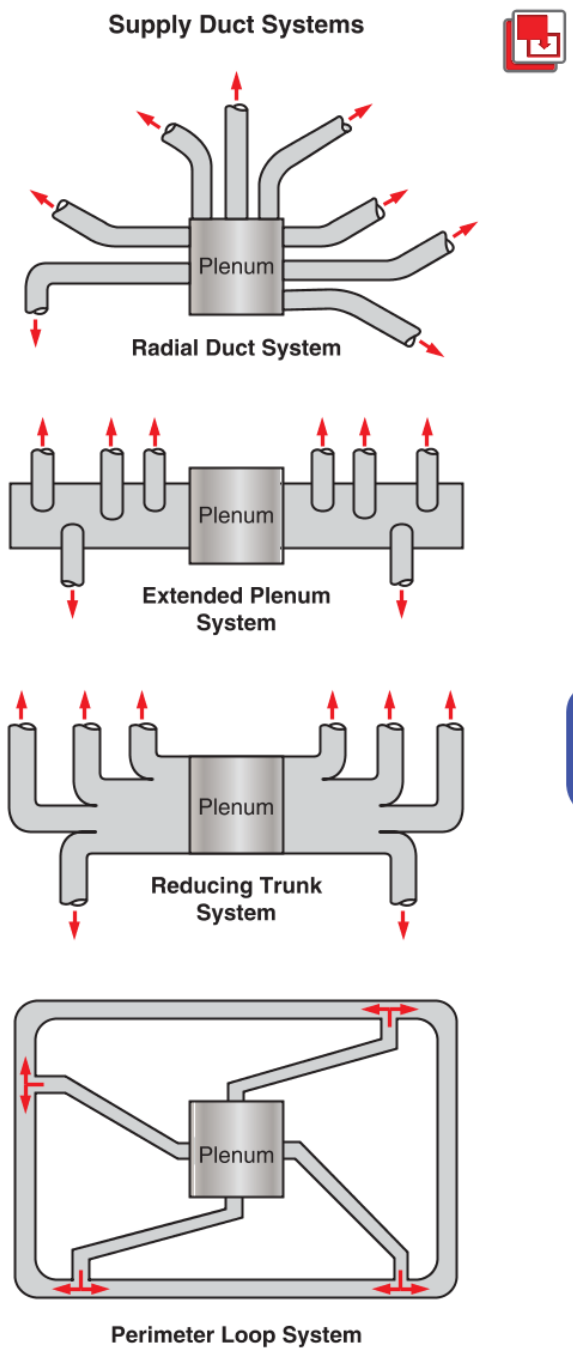

Goodheart-Willcox Publisher

Figure 29-11. Overhead views of common supply duct system configurations.

9

Copyright Goodheart-Willcox Co., Inc.

DiversiTech Corporation

Figure 29-12. Ductwork may be secured into place using various straps.

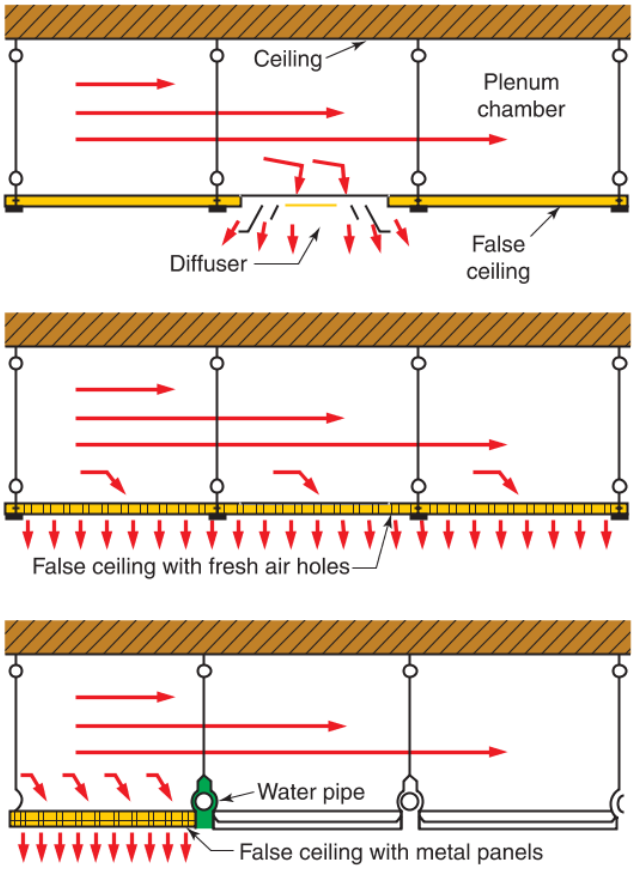

Goodheart-Willcox Publisher

Figure 29-13. A false ceiling can be used to form a plenum chamber for either cool or warm air. In the bottom drawing, water pipes heat or cool the metal panels.

29.4.2 Duct Construction

Ducts may be made of metal, wood, fiberglass, ceramic, or plastic materials. Metal ducts are used for warm air distribution and for exhaust air ducts. The metal is usually sheet steel coated with zinc, which is known as galvanized sheet metal. Galvanized sheet metal is used because it is inexpensive, strong, and corrosion-resistant. Some ducts are made of aluminum to reduce weight.

Code Alert

Duct Material

Some building codes do not approve of ducts made of aluminum, fiberglass, or plastic due to fire hazard. Many flexible ducts made of wire and fabric are also not permitted if fire could spread through them to other areas. Check with local authorities having jurisdiction for building codes before installing ductwork.

Sheet metal work is a specialty trade and is done by skilled sheet metal workers. Sheet metal brakes and formers are used for making ducts. While shops may use machines to form ductwork, some assembly and other work must still be done by hand. Sheet metal workers will need to become proficient in the use of various hand tools, such as snips and seamers, **Figure 29-14**.

Sheet metal ducts expand and contract as they heat and cool. Fabric joints are often used to absorb this movement. Fabric joints can also be used where ducts fasten to a furnace or air conditioner. This prevents most fan and furnace noise from traveling along the duct metal. However, most duct joints are made of sheet metal because fabric joints may present a fire hazard.

Round ducts are often made of flat sheets that are formed into a circular shape with ends locked together. Keeping these pieces as flat sheets saves space during transportation. Different seam locking methods makes assembly easy and quick, **Figure 29-15**.

To install a length of round duct as a branch supply, cut a hole in the plenum. Always begin by taking measurements and determining where everything will go prior to making any cuts, **Figure 29-16**.

Round ducts connect to plenum using ***starting collars***. These are couplings used to join round ducts to a square duct or plenum. Starting collars have a tabbed end that is inserted into the plenum and a crimped end over which is inserted the plain end of a round duct. The tabs are bent to grip the inside of the plenum. Use sheet metal screws to secure the starting collar and mastic to seal the joint, **Figure 29-17**.

Copyright Goodheart-Willcox Co., Inc.

Snips

Seamers

Goodheart-Willcox Publisher; hilmor

Figure 29-14. Snips and seamers are common sheet metal hand tools used for forming ductwork.

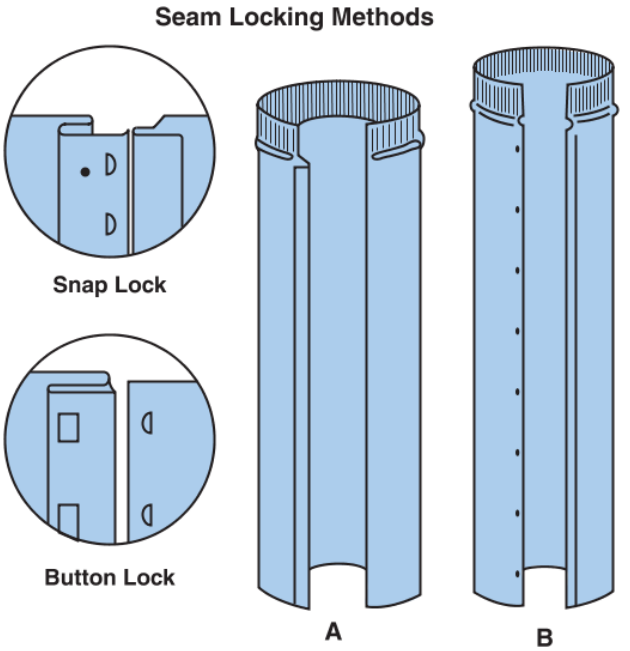

Reprinted from Air Conditioning Contractors of America's [ACCA] Basic Installation Manual, by permission of ACCA

Figure 29-15. Two seam locking methods. A—Snap lock. B—Button lock.

Milwaukee Electric Tool Corp.

Figure 29-16. A technician cutting a hole in plenum for a starting collar.

9

Copyright Goodheart-Willcox Co., Inc.

Used by permission of Mestek Machinery

Figure 29-17. A starting collar connects a round duct to a plenum.

Round ducts have a plain end and a crimped end. To join two lengths of round ductwork, the crimped end of one round duct is inserted into the plain end of another round duct, **Figure 29-18**.

Two lengths of round ducts are secured together using sheet metal screws that penetrate the overlap of the two ducts. Round ducts should be installed so that airflow is going in the direction of the crimped end of a round duct. This reduces the chance of air leakage if the ducts are not sealed with mastic. Elbows and other connections for branches are designed using geometric principles. Several types of duct connections are shown in **Figure 29-19**.

Though round ducts are often used as supply air branches, square ducts can also be used for branch supplies. Take measurements, determine locations, and mark out the cut before cutting, **Figure 29-20**.

Used by permission of Mestek Machinery

Figure 29-18. Crimped end of round duct is inserted into the plain end of another round duct. When installing, remember that the crimped end should face in the direction of airflow.

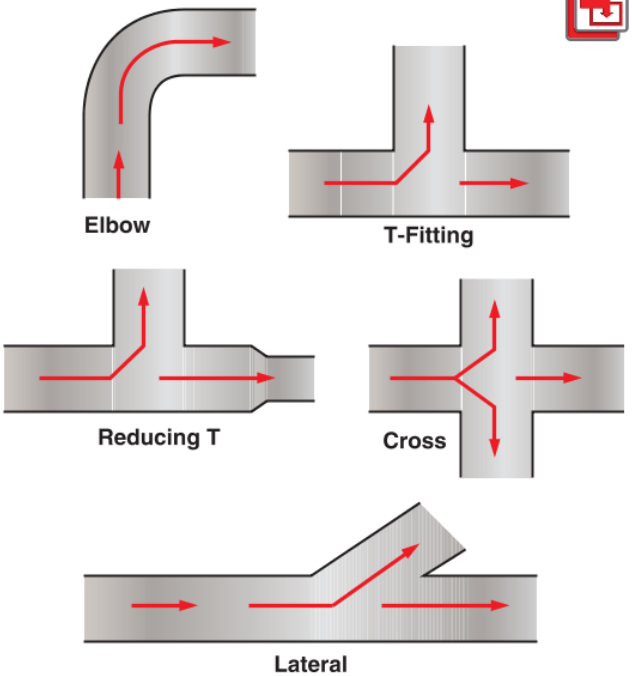

Goodheart-Willcox Publisher

Figure 29-19. These typical branch duct designs are used to split or redirect airflow in the ducts.

Lengths of square ductwork can be connected using a variety of joints. This often depends on the sheet metal fabricator and the machines used in their shop, **Figure 29-21**. Joints should be airtight and strong. Joints may be riveted for added strength and tightness. **Figure 29-22** shows a pop rivet tool that can be used to rivet from one side only.

Milwaukee Electric Tool Corp.

Figure 29-20. A technician cutting a hole in plenum for a square duct takeoff.

Copyright Goodheart-Willcox Co., Inc.

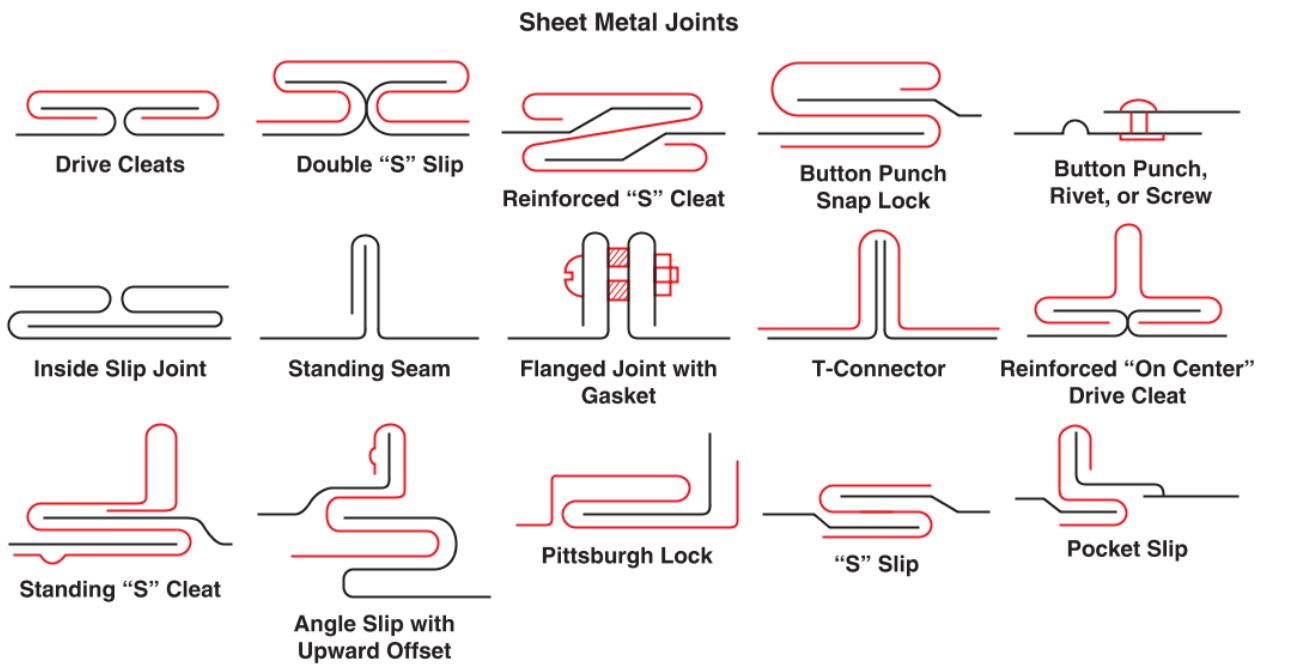

Goodheart-Willcox Publisher

Figure 29-21. Typical joint designs used to fabricate sheet metal ducts. The black lines represent the edges of the duct. The red lines represent parts added to the duct, such as clips, fasteners, and gaskets.

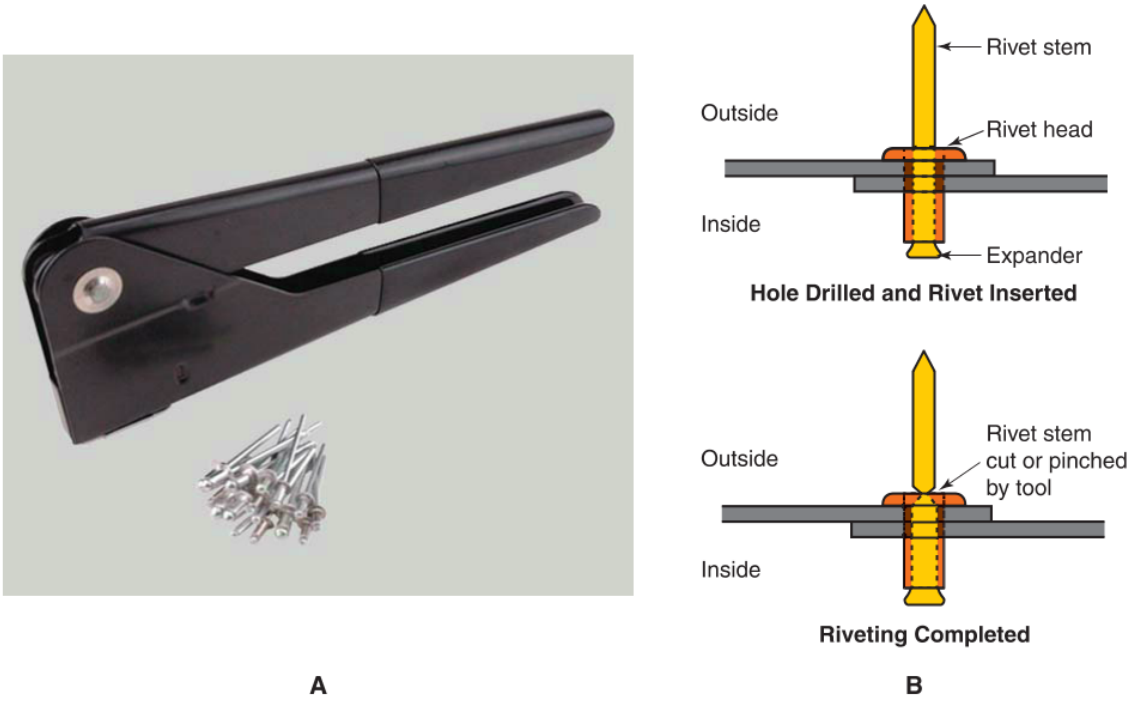

DiversiTech Corporation; Goodheart-Willcox Publisher

Figure 29-22. Pop rivets can be installed in sheet metal and ductwork in places where it would be difficult to install a solid rivet, such as areas with access only to the outside. A pop rivet is often called a "blind" rivet. A—Riveting tool. B—Riveting procedure. When the pop rivet is fully expanded, the rivet pliers pinch or cut off the rivet stem. In some cases, the technician may need to finish breaking off the stem.

Copyright Goodheart-Willcox Co., Inc.

Riveting a Joint Using a Pop Rivet Tool

To use a pop rivet tool to rivet a joint:

1. Align the two pieces of metal to be joined.
2. Drill a hole through both pieces of metal.
3. Place the rivet blank in the hole, with the nail-like stem facing outward.
4. Slide the nose of the tool over the rivet stem until the nose of the tool presses against the head of the rivet.
5. Squeeze the handle, which draws the expander toward the rivet head, expanding the rivet.
6. When the rivet is fully expanded, the rivet stem will break off flush with the rivet head.

Many air distribution systems are leaky, and conditioned air is often wasted by leaking into unconditioned areas. This is wasted energy for the building owner. However, this loss can be prevented by properly sealing ductwork.

Pro Tip

Sealing Ductwork

Never use duct tape to seal ductwork. Ductwork is often located in a home's unvented attic. High temperatures in summer can easily weaken the adhesive of duct tape, causing it to come loose and undoing any seal. Do not use duct tape. Use other stronger methods of sealing ducts, such as metal tape

Ductwork should be sealed with mastic sealant or metal tape. These products are stronger and longer lasting than duct tape. They can endure the stress that is so often endured by components installed in unconditioned areas of a building, such as an attic or crawl space.

Using Mastic to Seal a Duct Joint

1. Clean off the surfaces to be joined. Wipe with a dry cloth. If any grease or oily residue is present, use a cleaning solution.
2. With a gap of 1/4″ or less, apply a layer of mastic on the joint and use a brush to work the mastic into the joint. Fill the entire joint with mastic.
3. Spread mastic across the joint about 1″ on each side of the joint.
4. If the gap is more than 1/4″, place a fiberglass reinforcing membrane over the joint. Then apply mastic to fill the gap and cover over the entire membrane.

Duct joints in forced warm air systems should be as leakproof as possible. Leaking joints cut down on the volume of air that is delivered at the end of long runs. Connect all duct sections with good sheet metal joints. Leaks may also make cold air ducts inefficient. Joints and seams in cold air ducts should be sealed the same way they are sealed in warm air ducts.

Many ducts are insulated (either on the inside or outside) to reduce noise as well as heat transfer. Insulation may be added to the inside of ducts of different shapes, **Figure 29-23**.

Armacell LLC

Figure 29-23. Insulation added to the inside of round and square ductwork.

Copyright Goodheart-Willcox Co., Inc.

Installing Insulation into Square Ductwork

1. Take measurements of the ductwork.
2. Cut insulation to appropriate size.
3. Wipe ductwork surface dry. If any grease or residue is present, wash with a cleaner and wipe dry.
4. Apply adhesive to the insulation or to the ductwork. Consult insulation manufacturer literature for specifics.
5. Position the insulation into place straight, flat, and even. Apply pressure evenly to ensure good adhesion between insulation and duct surfaces.
6. Continue following these steps until all surfaces are dry, clean, and insulated to satisfaction, **Figure 29-24**.

When insulation is added to the outside of a duct, it may be fastened with adhesives or metal clips. Rolls of insulation can be wrapped around the outside, **Figure 29-25**.

Some ducts do not require the addition of insulation, because they are manufactured already insulated. These ducts are made with a metal inner wall and a metal outer wall. In-between each metal wall is insulation and sound absorbent material, **Figure 29-26**.

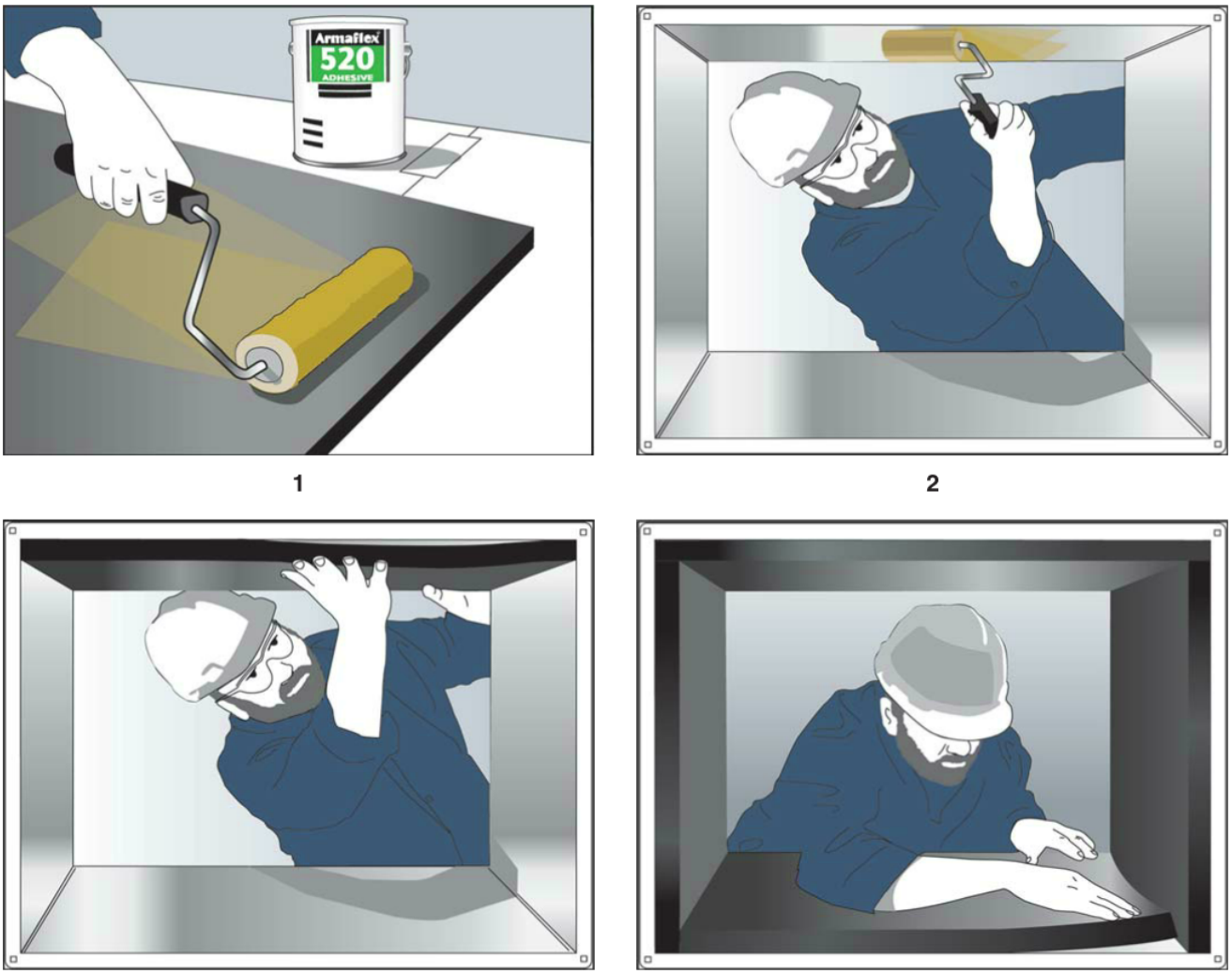

Armacell LLC

Figure 29-24. Some of the steps of installing insulation into square ductwork.

Copyright Goodheart-Willcox Co., Inc.

A B

CertainTeed Corporation

Figure 29-25. Ducts insulated on the outside. A—A roll of duct insulation. B—Commercial HVAC sheet metal ductwork being wrapped with rolls of insulation.

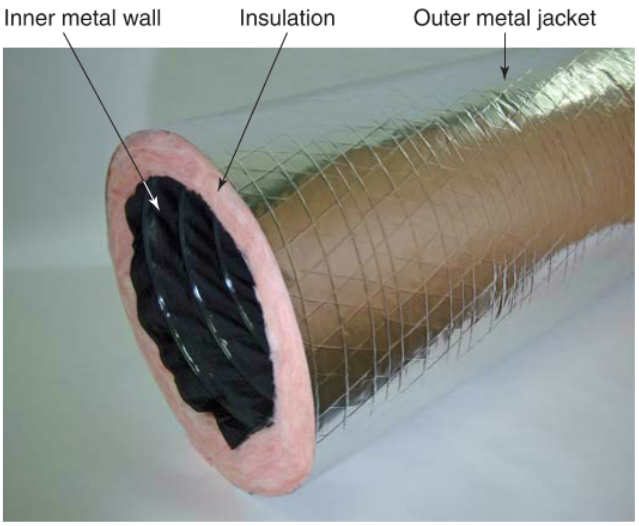

Photo used with permission of Owens Corning. Copyright © 2011 Owens Corning Intellectual Capital. LLC.

Figure 29-26. Round duct with insulation sandwiched between an inner and an outer metal jacket.

If duct systems are noisy, the air velocity may be too high, there may be turbulence, or the metal edges of the duct may be producing noise. Some ducts are lined with an acoustic material to provide a quieter duct system. Duct sections equipped with silencers are also available. Such units act as mufflers.

Recent years has seen a different style of metal ductwork being used more frequently. Spiral ducts are available in round, oval, and flat oval shapes. These metal ducts are formed to have a spiral seam that wraps around the outside of the duct its whole length. These ducts can be manufactured with fittings that provide a high level of air-tightness and a labor-savings advantage over some traditional ducts, **Figure 29-27**.

29.4.3 Fiberglass and Other Nonmetal Ducts

Some ducts are made of nonmetals, such as fiberglass, urethane, plastic, or sheetrock. ***Ductboard*** is a compressed fiberglass panel that can be easily cut with a knife and formed into a square or rectangular shape. The fiberglass provides good insulation and a fairly solid body to serve as ductwork, **Figure 29-28**.

Used by permission of Mestek Machinery

Figure 29-27. Round and flat oval spiral ducts.

Copyright Goodheart-Willcox Co., Inc.

Some nonmetal ducts have a flexible nature that may be used for gradual bends. This is needed when connecting air ducts to diffusers or when routing air ducts through spaces with obstructions. Textile ducts may be used for high volume air movement in large commercial applications, **Figure 29-29**.

Safety Note

Nonmetal Duct Materials

Duct material must not release any loose material into the airstream. Ducts made of asbestos or fiberglass should be plastic-coated. Asbestos fibers and fiberglass particles released into the air are harmful to health.

Round ducts made of nonflammable plastic and spring-steel wire are often used. They need no elbows and are easily installed around other piping, beams, and joints. This type of duct generally relies on self-inflation.

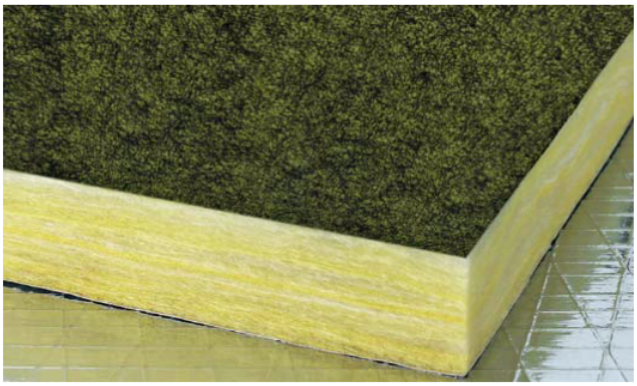

A

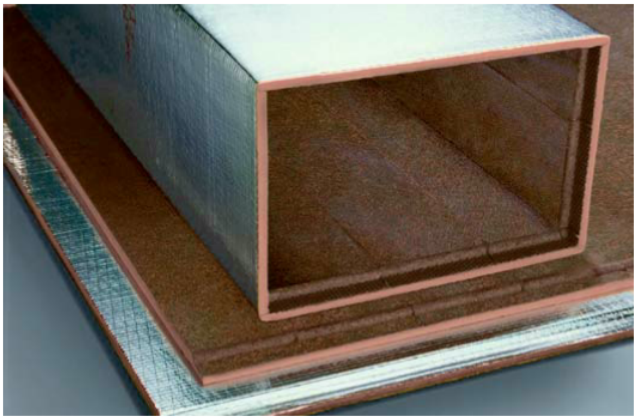

B

CertainTeed Corporation; Photo used with permission of Owens Corning. Copyright © 2011 Owens Corning Intellectual Capital. LLC.

Figure 29-28. A—Rigid ductboard made of resin-bonded glass fibers can be cut and bonded into ductwork of different shapes and sizes. B—Fiberglass ductwork wrapped in aluminum foil.

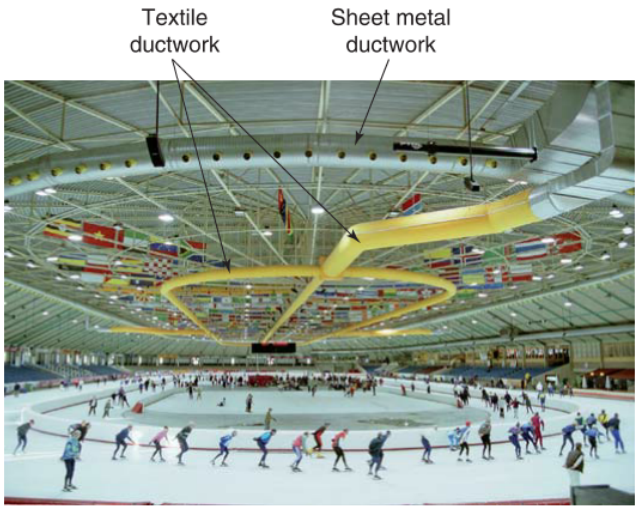

KE Fibertec NA, Inc.

Figure 29-29. This ice skating rink uses a combination of traditional sheet metal ductwork and textile ductwork.

The duct inflates when the blower is moving air through the systems. The duct deflates when no air is being moved, **Figure 29-30**.

29.4.4 Duct Dimensions

Any transition in the size of a duct should be tapered. When reducing the size of a round or rectangular duct, the taper should be approximately 1″ for every 4″ in length. When the duct is being enlarged, increase the cross-sectional dimensions of the duct 1″ for every 4″ to 7″ of length.

The sizes of rectangular ducts must be carefully chosen. The width and height dimensions should not be much different. The ratio of a duct's wide side to its

DuctSox Corporation

Figure 29-30. Textile duct being used in an underfloor application.

Copyright Goodheart-Willcox Co., Inc.

narrow side is called the ***aspect ratio***. For example, if a duct is 18″ wide and 6″ tall, its aspect ratio is 18 to 6 (written 18:6), which can be reduced to 3 to 1 (3:1).

An aspect ratio of 1:1 provides the smallest perimeter for any given cross-sectional area. This is desirable because it maximizes the duct's capacity while minimizing its material requirements. Multiplying the cross-sectional area times the length of the duct yields the duct's volume. When you multiply the duct's perimeter by its length, you get the surface area of the duct. As you will recall, the surface area represents the amount of material required to construct the duct. Therefore, a rectangular duct with a 1:1 aspect ratio can hold the maximum amount of air using the minimum amount of material.

The following example shows how more metal is used as the aspect ratio increases: Assume a duct is 10″ × 10″ (aspect ratio 1:1). It has a cross-sectional area of 100 in^2 while the distance around (perimeter) is 10″ + 10″ + 10″ + 10″ = 40″. Another duct with a cross-sectional area of 100 in^2 is made 20″ wide and 5″ deep. The perimeter of this duct is 20″ + 5″ + 20″ + 5″ = 50″, or a 25% increase in metal for each unit of length. Sheet metal contractors classify ducts by their aspect ratios and estimate costs by class. **Figure 29-31** lists some common duct aspect ratios.

A duct should not be placed in a stud or joist space when its size is equal to the inside dimensions of the space. There must be room for fittings and clearance for alignment and expansion. The recommended clearance varies with the type of system. **Figure 29-32** illustrates a satisfactory duct clearance between floor joists. **Figure 29-33** lists the recommended gauge thickness for various sizes of round ducts and rectangular ducts.

Ducts going through floors should be protected on the corners by angle iron. Large sections of sheet metal or ducts must be cross-broken in the shop to reduce panel vibration. Cross-breaking the large panels prevents ***oil canning*** (the sound of expanding and contracting) when the blower starts and stops, **Figure 29-34**.

Duct Aspect Ratio		
Duct Class (Aspect Ratio)	Wide Side (in)	Perimeter (in)
1 (1:1)	6–18	24–72
2 (2:1)	12–24	36–72
3 (3:1)	26–40	70–106
4 (4:1)	24–88	60–220
5 (5:1)	48–90	116–216
6 (6:1)	90–144	210–336

Goodheart-Willcox Publisher

Figure 29-31. Chart listing common duct aspect ratios, the range of duct sizes available in those aspect ratios, and the perimeter sizes for those ducts. The aspect ratio is determined by dividing the width of the duct by its height.

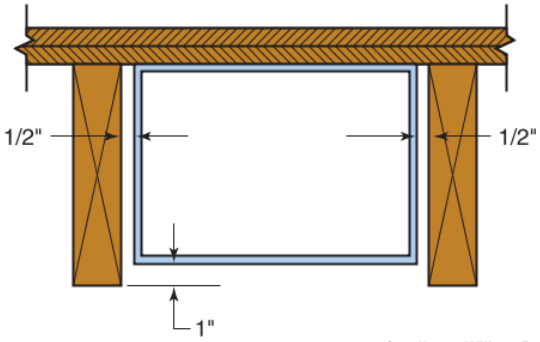

Goodheart-Willcox Publisher

Figure 29-32. When ducts are installed between floor joists, adequate working clearance is often allowed between the duct and joists.

Recommended Gauge Thickness for Round Metal Ducts		
Round Duct Diameter	Commercial, Galvanized Sheet Steel (gauge)	Residential, Galvanized Sheet Steel (gauge)
Up to 12″	26	30
13″ to 18″	24	28
19″ to 28″	22	
27″ to 36″	20	
35″ to 52″	18	

Gauge Thickness for Rectangular Metal Ducts			
Rectangular Ducts (wide side)	Commercial		Residential
	Galvanized Sheet Steel (gauge)	Aluminum	Galvanized Sheet Steel (gauge)
Up to 12″	26	.020″	28
13″ to 23″	24	.025″	26
24″ to 30″	24	.025″	24
31″ to 42″	22	.032″	
43″ to 54″	22	.032″	
55″ to 60″	20	.040″	
61″ to 84″	20	.040″	
85″ to 96″	18	.050″	
Over 96″	18	.050″	

Goodheart-Willcox Publisher

Figure 29-33. Recommended gauge thickness for round and rectangular metal ducts.

Copyright Goodheart-Willcox Co., Inc.

Goodheart-Willcox Publisher

Figure 29-34. Break lines (ridges) are formed on large sheet metal panels or large ducts to make them more rigid.

Continental Industries, Inc.

Figure 29-35. Registers generally have fixed vanes with movable deflectors to direct airflow.

29.4.5 Registers, Diffusers, and Grilles

The fixtures that cover duct openings serve two purposes. They control airflow out of the duct and prevent large objects from entering the duct. There are several different types of fixtures.

Registers deliver concentrated airstreams into a room. Many have one-way or two-way adjustable airstream deflectors. The deflectors can be adjusted to change the direction of the airflow into the room, **Figure 29-35**.

Thinking Green

Sealing Registers

Any registers with ductwork that passes from unconditioned spaces into conditioned spaces should be sealed to the drywall or subfloor. This will reduce heat leakage and improve system efficiency.

Diffusers are located on the supply side of the duct system. They diffuse, or spread, the air leaving the duct more uniformly than registers do. Diffusers deliver widespread, fan-shaped flows of air into a room. Some diffusers cause the duct air to premix with some room air before leaving the diffuser, and some diffusers have adjustable dampers. A ceiling-mounted air diffuser directs air in several directions along the ceiling, **Figure 29-36**.

Grilles are nonadjustable fixtures used to cover return duct inlets. Grilles offer some resistance to airflow, blocking about 30% of the air. For this reason, the duct cross section is usually enlarged at the grilles. This enlargement also slows air movement and reduces noise.

RectorSeal

Figure 29-36. Diffusers have fixed vanes that are designed to direct airflow in different directions.

Pro Tip

Registers, Diffusers, and Grilles

The terms register, diffuser, and grille are often used interchangeably. However, there are distinctions that should be noted. Be mindful when using these terms in conversation with HVACR professionals and customers. Make sure everyone understands to which component you are referring.

Copyright Goodheart-Willcox Co., Inc.

29.4.6 Dampers

Controlling airflow is necessary in forced-air systems. Without this control, some spaces would receive too much air, while others would receive too little. Airflow through ducts can be controlled and adjusted by duct dampers. Duct dampers can be adjusted to balance airflow. They can also open and close certain ducts for zone control. Three commonly used types of dampers are multiple-blade, butterfly, and split dampers.

A ***multiple-blade damper*** is used primarily in square or rectangular ducts to restrict or completely shut off airflow to a room or zone. This type of damper can usually be operated manually or by using an electric or pneumatic actuator.

A ***butterfly damper*** is used in round ducts to control airflow. It is usually opened and closed using a manual control handle, but some may be operated by an automatic actuator. A ***split damper*** is used where an air path branches off (splits) in two directions. As the damper moves, it closes off one branch of the duct to airflow and opens the other branch. This decreases airflow in one branch while increasing airflow in the other branch. **Figure 29-37** illustrates examples of each type of damper.

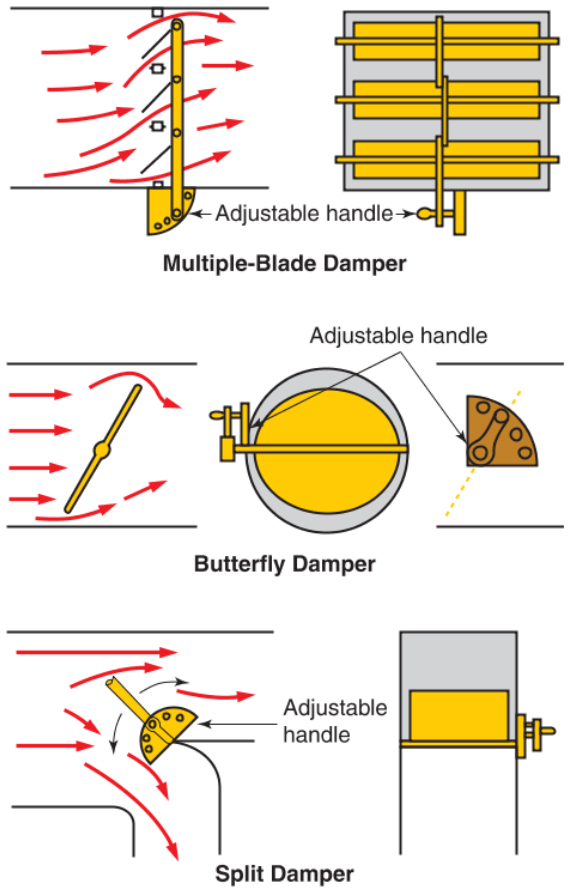

Goodheart-Willcox Publisher

Figure 29-37. Dampers adjust airflow volumes to help achieve a balanced system. These three types of dampers are butterfly, multiple-blade, and split.

Pro Tip

Damper Installation

When installing a damper, always draw a line on the end of the damper shaft that extends out of the duct, showing damper position. Labels may help show the position of the damper blades.

Damper Controls

Many dampers are automatically controlled for either zone heating or cooling. Automatic controls are used for humidity control or for temperature control. Automatic controls are also used to mix two airflows for either fresh air or recirculated air mixes. These multiple dampers are interlocked by controls to provide different mixes and to maintain correct total airflow. **Figure 29-38** is a diagram of typical damper installations.

Automatically controlled dampers open and close based on a thermostat's signal. Damper position may be regulated by electric motors, pneumatic motors, hydraulic motors, or solenoids, **Figure 29-39**.

If outside air is too cold, thermostats cause power-operated devices to close the outside air damper. Thermostats also react if the recirculated air and outside air are out of balance. They operate actuators that open one damper and close the other just enough to produce the correct mix. These actuators are usually operated electrically or pneumatically.

Often dampers are held in a closed position by springs. When a damper must open, the thermostat controls a motor to open the damper as much as needed. The torque from the motor overcomes the spring pressure holding the damper closed. The motor continues to hold the damper open until the thermostat sends a signal to close the damper. Spring pressure then closes the damper. The motor operates the damper through a gear reduction train.

Control devices that regulate air volume in a distribution system are called variable air volume (VAV) controllers. These electronic devices are usually part of a larger computer-controlled HVAC system. On VAV systems, actuators use either pneumatic or electronic control for opening and closing of a damper, based on room temperature. The thermostat modulates the actuator to open or close the damper, allowing more or less heating or cooling to the conditioned space. The advantage is that the room will have less of a temperature swing, unlike with constant air volume systems.

Copyright Goodheart-Willcox Co., Inc.

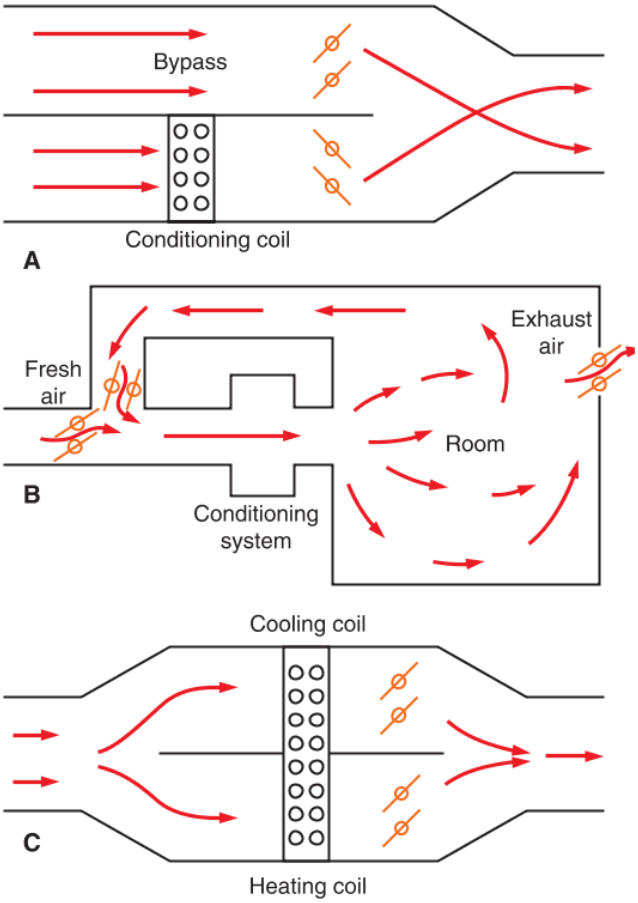

Goodheart-Willcox Publisher

Figure 29-38. Dampers can be used to control airflow for a variety of purposes. A—Dampers can open and close a bypass to control temperature and relative humidity. B—Dampers can control fresh air intake, exhaust air, and the blend of recirculated and fresh air. C—Dampers can control airflow over cooling or heating coils to maintain a precise temperature.

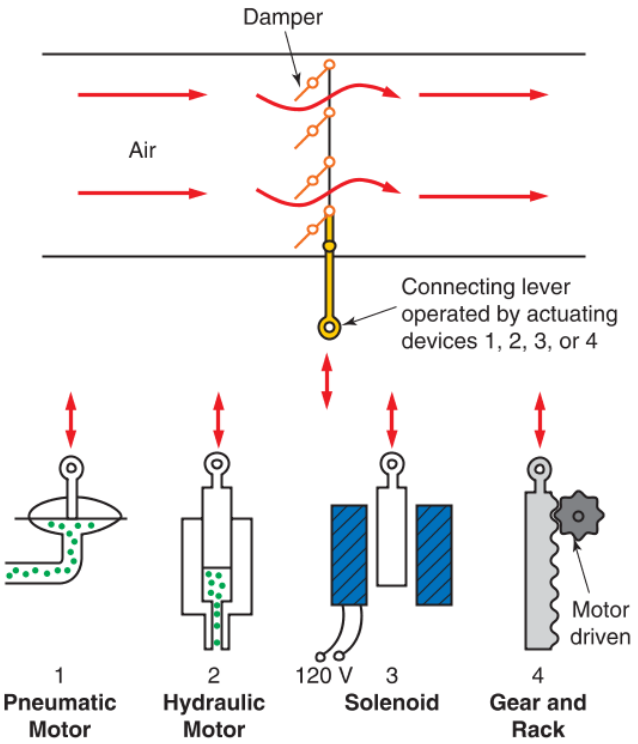

Goodheart-Willcox Publisher

Figure 29-39. A duct damper for controlling airflow can be operated by different types of power devices. Four ways to control damper action are shown.

Fire Dampers

Automatic fire dampers should be installed in all vertical ducts in commercial and industrial buildings. Ducts, especially vertical ones, will carry fumes and flames from fires. Fire dampers maintain the required rating of fire-related barriers, such as walls, doors, and floors, when they contain ductwork. These dampers are designed to close automatically on detection of heat. Airflow is stopped, and the passage of flames is limited. Automatic fire dampers should be inspected and tested at least once a year to ensure that they are in good operating condition.

Ducts passing through a firewall must have fire dampers. Hour ratings for fire dampers must be 75% of the hour rating for the wall, floor, or partition. For example, a fire damper rated for 1.5 hours is used in a fire barrier rated for up to 2 hours.

There are two types of fire dampers: static fire dampers and dynamic fire dampers. Static dampers are used in duct systems where there is little or no airflow when the damper closes. Dynamic fire dampers are required at locations in which fan pressure will be on during a fire. These units are expected to close against the air velocity and pressure produced by the system fan.

Fire dampers are assigned one of the following rating classifications based on their performance:

- Class A—This classification of fire dampers will hold back a fire indefinitely.
- Class B—This classification of fire dampers can be used when a two- to four-hour hold is required. This class is approved for most general installations.
- Class C—Fire dampers in this class are used where a one-hour hold is required.

SMACNA (the Sheet Metal and Air Conditioning Contractors' National Association, Inc.) publishes *Guideline on Through-Penetration Firestopping*. This document provides guidance regarding the installation of ductwork. Vertical ducts serving two or more floors must be enclosed in a fire partition. Fire dampers must be installed in the ducts. However, ducts of less than 20 in^2 (129 cm^2) area do not require a fire damper.

Copyright Goodheart-Willcox Co., Inc.

Fire dampers are usually held open by a fusible link. Heat will melt the link. The damper will close either by gravity, weights, or springs. Some fire dampers have electronic sensors that operate a closing mechanism. The damper blade latches may use power to close the damper. Electric power devices may also be used to close the damper. Smoke dampers use a photoelectric device to detect smoke. An electronic device will trip a holding device and the damper will close.

Code Alert

Fire Dampers

Before installing ducts, check local fire damper regulations. Make sure that any necessary fire and smoke dampers are installed. Install the dampers in strict adherence to the manufacturer's instructions.

29.4.7 Elbows

Elbows are 90° bends (unless otherwise specified) in the ducts. Airflow direction is diverted from a straight line using elbows. A variety of elbows are available for different types of ductwork. Round ducts often use adjustable elbows that can change bend angle by rotating the interlocking parts, **Figure 29-40**.

Air has inertia, which is to say it has mass and it obeys Newton's laws of motion. Once set in motion, air continues moving in the same direction until it is forced to change. In addition, air is compressible. On turns, therefore, it crowds toward the outer side of the elbow, as shown in **Figure 29-41**.

When airflow changes direction, it slows down, compresses, and becomes turbulent. The more abruptly the airflow changes direction, the more compressed and turbulent it becomes. The increased turbulence decreases the efficiency of the ventilation system. However, turbulence can be minimized and airflow velocity can be maximized by making the directional changes more gradual by installing long-radius elbows. If short-radius elbows must be used, turbulence can be minimized by using an elbow with built-in directional vanes.

Used by permission of Mestek Machinery

Figure 29-40. Round duct elbows have interlocking parts that can be twisted to change the direction and angle of the bend.

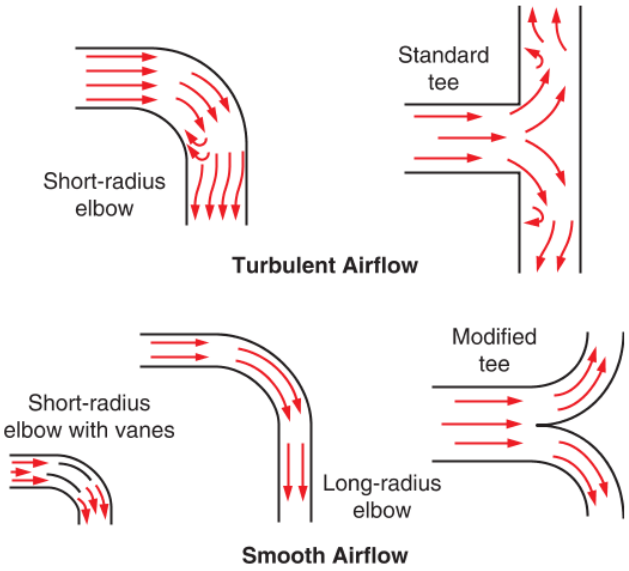

Goodheart-Willcox Publisher

Figure 29-41. To minimize turbulence and maximize airflow, make any directional changes in the ductwork as gradual as possible or use elbows that include guiding directional vanes.

29.5 Duct Sizing

In order for a heating or cooling system to function properly, the ducts supplying the conditioned air must be sized correctly. The duct sizes and damper settings determine the amount of conditioned air delivered to each room. The amount of air delivered must be balanced with the room's heating and cooling loads.

Another concern when designing a duct system is noise. Noise can become a problem if air travels through the ducts too quickly. A table of recommended maximum duct velocities is in **Figure 29-42**.

Code Alert

Duct Sizing

Both the *International Residential Code* (*IRC*) and the *International Mechanical Code* (*IMC*) require residential duct sizes to be determined in accordance with ACCA's *Manual D—Residential Duct Systems* or another approved method. This section provides only a simplified overview of duct sizing. Refer to ACCA's *Manual D* for complete duct sizing information.

Copyright Goodheart-Willcox Co., Inc.

Recommended Maximum Duct Velocities				
Application	Main Ducts		Branch Ducts	
	Supply	Return	Supply	Return
Apartments	1000	800	600	600
Auditoriums	1300	1100	1000	800
Banks	2000	1500	1600	1200
Hospital Rooms	1500	1300	1200	1000
Hotel Rooms	1500	1300	1200	1000
Industrial	3000	1800	2200	1500
Libraries	2000	1500	1600	1200
Meeting Rooms	2000	1500	1600	1200
Offices	2000	1500	1600	1200
Residences	1000	800	600	600
Restaurants	2000	1500	1600	1200
Retail Stores	2000	1500	1600	1200
Theaters	1300	1100	1000	800

Goodheart-Willcox Publisher

Figure 29-42. Recommended maximum airflow velocities for the supply and return of main and branch ducts. This table shows values for various types of buildings.

29.5.1 General Duct Design Guidelines

When designing a duct system, keep the following general rules in mind:

- Install the air handler (blower) in a central location. By installing the air handler near the center of the building, the lengths of the longest supply and return ducts are minimized.
- Keep duct runs as short as practical. Position ducts to avoid obstacles and minimize the number of fittings required.
- Never install a duct in the end of a plenum. Always install ducts in the sides of a plenum. A duct in the end of a plenum will receive too much airflow.

29.5.2 Duct Sizing Procedure

The steps in the following duct sizing procedure are described in greater detail in this section.

Duct Sizing Procedure

1. Obtain room-by-room heating and cooling load calculations.
2. Obtain blower data "spec sheet" for the system equipment.
3. Determine the external static pressure (ESP) for the system using the blower data sheet.
4. Calculate the device pressure losses (DPL).
5. Calculate the available static pressure (ASP).
6. Prepare a rough sketch of the duct system, including register and grille locations, distances, and duct fittings.
7. Calculate the total effective length (TEL) for the duct system.
8. Calculate the design friction rate for the system.
9. Calculate the design air quantity for each room and each section of ductwork.
10. Use an airflow friction chart or duct calculator to determine duct sizes for each section of ductwork.
11. If needed, convert circular duct diameter to an equivalent rectangular duct size.

Pro Tip

Duct Sizing Tools

In practice, duct systems are typically sized using worksheets, spreadsheets, apps, and computer programs. These tools simplify the process of duct sizing. However, in order to use these tools correctly, you must understand the steps in the process and the information that determines the duct sizes.

Before sizing a duct system, you must first know the heating and cooling loads for the house and you must have information about the blower fan selected for the installation.

Copyright Goodheart-Willcox Co., Inc.

Room-by-Room Heat Loads	
Room	**Heat Load (Btu/hr)**
Living room	25,000
Dining room	15,000
Kitchen	5000
Bathroom	8000
Bedroom #1	15,000
Bedroom #2	12,000
Total for house	**80,000**

Goodheart-Willcox Publisher

Figure 29-43. Example of heat loads for a small house.

Heating and cooling load calculation is discussed in Chapter 37, *Heating and Cooling Loads*. The heating and cooling loads for each room are added to determine the total load. The loads are expressed in units of Btu/hr. The total heating and cooling loads are used to select the correct size of the heating and cooling equipment. **Figure 29-43** shows an example of heating loads for a small house.

The airflow through the blower depends on the speed of the blower and the pressure difference between the blower inlet and outlet. The blower manufacturer provides a specification sheet listing the airflow of the blower under various conditions. **Figure 29-44** shows an example of the information provided on a specification sheet.

Pro Tip

Blower Specification Sheets

When using a blower specification sheet to determine the design external static pressure, use the medium blower speed airflow values.

The pressure difference between the blower inlet and outlet is the ***external static pressure (ESP)***. External static pressure is determined by the duct system. In turn, the external static pressure determines the volume of air delivered by the blower. Thus, the duct system must be designed to achieve the external static pressure that will result in the blower motor delivering the correct air volume.

If the external static pressure is too great, the blower will not deliver enough air to match the loads. If external static pressure is too low, the blower will deliver more airflow than is needed.

Pro Tip

External Static Pressure

You can think of external static pressure as the amount of resistance the air must overcome in traveling from the blower outlet, through the evaporator coil, supply duct, supply register, return grille, return duct, and filter before returning to the blower inlet. The greater the number of obstructions and distances along this path, the greater the external static pressure.

Example:

The blower with the specifications listed in **Figure 29-44** is being installed in a system with a design airflow of 1250 cfm. What external static pressure should be used for the duct system design?

Solution:

Use the medium fan speed row. Read across the row and find the design airflow of 1250 cfm. Then read up the column to find the corresponding external static pressure, which is 0.5 in. WC.

Determining Available Static Pressure

After the required external static pressure is determined based on the blower data, the next step in the duct sizing process is to determine the available static pressure. The ***available static pressure (ASP)*** is a measure of the amount of friction or resistance the ductwork is designed to provide to the flow of air. This is used to design the longest duct run.

Device pressure losses (DPL) are pressure losses in the duct system caused by devices other than ducts. **Figure 29-45** shows examples of some typical items considered when determining device pressure losses.

Blower Airflow (cfm)										
Blower Speed	**External Static Pressure [in. WC (water column)]**									
	0.1	**0.2**	**0.3**	**0.4**	**0.5**	**0.6**	**0.7**	**0.8**	**0.9**	**1.0**
Low	1284	1278	1254	1213	1154	1078	984	873	745	599
Medium	1423	1406	1370	1318	1250	1167	1068	953	823	677
High	1560	1525	1477	1416	1341	1253	1152	1037	909	768

Goodheart-Willcox Publisher

Figure 29-44. Manufacturers provide "spec sheets" showing the volume of air delivered by a blower at various speeds and at various external static pressures. When sizing ducts, use this chart to determine the required external static pressure, which is based on obtaining the design airflow at medium speed.

Copyright Goodheart-Willcox Co., Inc.

Device Pressure Loss	
Item	Typical Pressure Loss (in. WC)
Filter	0.08–0.15
Evaporator coil	0.10–0.30
Air cleaner	0.20
Dampers	0.03
Registers, diffusers, grilles	0.03

Goodheart-Willcox Publisher

Figure 29-45. Table listing typical device pressure loss (DPL) values or ranges for air system components.

The available static pressure (ASP) is determined by subtracting device pressure losses (DPL) from the external static pressure (ESP).

$$ASP = ESP - DPL$$

Example:

A system with an ESP of 0.5 in. WC has the following device pressure losses:

- Evaporator coil, 0.15 in. WC
- Damper, 0.03 in. WC
- Air filter, 0.08 in. WC
- Supply register, 0.03 in. WC
- Return grille, 0.03 in. WC

What is the available static pressure for the duct system?

Solution:

Add the values for the various components to determine the device pressure losses (DPL):

$$\begin{aligned} DPL = {} & 0.15 \text{ in. WC} \\ & 0.03 \text{ in. WC} \\ & 0.08 \text{ in. WC} \\ & 0.03 \text{ in. WC} \\ & + 0.03 \text{ in. WC} \\ \hline & = 0.32 \text{ in. WC} \end{aligned}$$

Then determine the available static pressure (ASP):

$$\begin{aligned} ASP &= ESP - DPL \\ &= 0.50 \text{ in. WC} - 0.32 \text{ in. WC} \\ &= 0.18 \text{ in. WC} \end{aligned}$$

Determining Total Effective Length

The available static pressure is a measure of the amount of resistance the ductwork is designed to provide to the flow of air. Resistance results from the air contacting the interior surfaces of the duct. The amount of this resistance in the system depends on the length of the duct.

Additional resistance to airflow occurs anytime the air flows through a passage that is not straight or has a change in cross section. For example, when air must pass through a reducer or "turn" as it passes through an elbow fitting, the airflow experiences increased resistance.

Duct systems are designed using the concept of ***effective length***. The effective length of a duct run is determined by adding the physical length of the duct work to effective length values for each fitting in the duct run. The table in **Figure 29-46** shows effective length values for some common duct fittings.

Code Alert

Effective Length for Duct Fittings

ACCA's *Manual D* provides effective length values for an extensive collection of fittings. Minor variations between fittings impact the effective length values. Always check this reference carefully to be sure the fitting being used in the field matches the selection used to determine effective length.

In order to determine the effective length for each supply and return duct run, you must first sketch out the duct system. This sketch must include the locations of all supply registers and return grilles. Also, all fittings required to route the ducts through the house must be included in your sketch. **Figure 29-47** shows a sketch of the supply duct system used to provide air to the rooms described in the earlier example.

9

Example:

Determine the effective length of the longest duct highlighted in **Figure 29-47**. The effective length of all fittings in the duct run is 114′.

Solution:

The effective length is the physical length of the duct run plus the effective length of all fittings:

Effective Lengths for Common Fittings	
Fitting	Effective Length (feet)
Round branch from trunk	20–50
Rectangular branch from trunk	20–75
Supply air boots	20–60
Return air boots	10–20
Return elbow	10–45

Goodheart-Willcox Publisher

Figure 29-46. Effective length ranges for common duct fitting types. Refer to ACCA's *Manual D* for effective length values for specific fittings.

Copyright Goodheart-Willcox Co., Inc.

$$\begin{aligned}\text{Effective length} &= (12' + 2' + 8' + 2' + 4' + 8') + 114' \\ &= 36' + 114' \\ &= 150'\end{aligned}$$

Total effective length (TEL) is the greatest effective length for a supply duct run in a system added to the greatest effective length for a return duct run. The total effective length is the length of a straight duct run that would offer the same resistance to airflow as the most restrictive supply and return duct runs on a system.

Example:

In the previous example, the effective length of the longest supply duct run was 150′. If the effective length of the longest return duct run in the system is 135′, what is the total effective length for the system?

Solution:

To find total effective length, add the effective lengths of the longest supply and return duct runs:

$$\begin{aligned}\text{TEL} &= 150' + 135' \\ &= 285'\end{aligned}$$

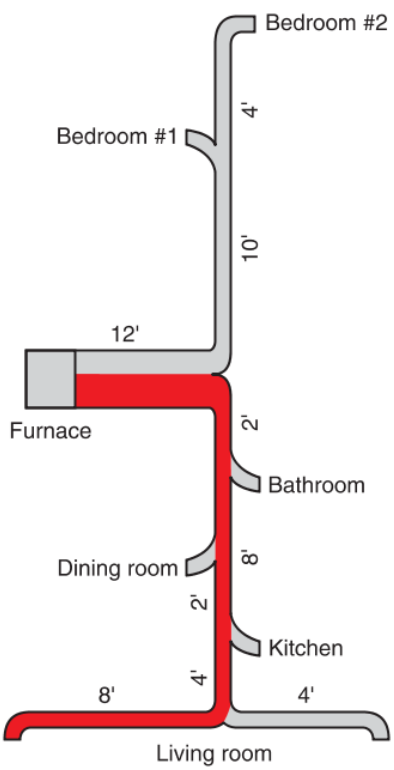

Goodheart-Willcox Publisher

Figure 29-47. A simple duct installation. The longest duct run is shown in red.

Determining Friction Rate

Friction loss in ducts is the pressure drop resulting from the air contacting the inside surface of the duct. For the purpose of duct design, friction loss is typically expressed in units of inches of water column per 100′ of duct.

The ***friction rate*** for a duct system is the friction loss along the total effective length that results in a pressure drop equal to available static pressure. The friction rate is calculated by the following formula:

$$\text{Friction rate} = \frac{\text{ASP (in WC)}}{\text{TEL (ft)} \times 100}$$

Example:

The system used in the previous examples has an available static pressure of 0.18 in. WC and a total effective length of 285′. Determine the friction rate for the duct system.

Solution:

Using the friction rate equation:

$$\begin{aligned}\text{Friction rate} &= \frac{\text{ASP}}{\text{TEL}} \times 100 \\ &= \frac{0.18 \text{ in. WC}}{285'} \times 100 \\ &= (0.18 \text{ in. WC} \div 285') \times 100 \\ &= 0.0006 \text{ in. WC} \times 100 \\ &= 0.06 \text{ in. WC per } 100' \text{ of duct}\end{aligned}$$

Determining Air Quantity for Each Room

Each duct run is sized based on the specific volume of air flowing through the run. The first step in determining the airflow in each branch is to determine the airflow required for each room. The required airflow for a room is found using the following equation:

$$\text{Airflow (room)} = \frac{\text{Heat load for room}}{\text{Total heat load}} \times \text{Design cfm}$$

This process simply divides the design airflow in proportion to heat loads.

Example:

Determine the room-by-room design air volume for the six rooms listed in **Figure 29-43**. The system has a design airflow of 1250 cfm.

Solution:

$$\begin{aligned}\text{Living room} &= \frac{25{,}000}{80{,}000} \times 1250 \text{ cfm} \\ &= 391 \text{ cfm}\end{aligned}$$

Copyright Goodheart-Willcox Co., Inc.

$$\text{Dining room} = \frac{15{,}000}{80{,}000} \times 1250 \text{ cfm}$$
$$= 234 \text{ cfm}$$

$$\text{Kitchen} = \frac{5000}{80{,}000} \times 1250 \text{ cfm}$$
$$= 78 \text{ cfm}$$

$$\text{Bathroom} = \frac{8000}{80{,}000} \times 1250 \text{ cfm}$$
$$= 125 \text{ cfm}$$

$$\text{Bedroom \#1} = \frac{15{,}000}{80{,}000} \times 1250 \text{ cfm}$$
$$= 234 \text{ cfm}$$

$$\text{Bedroom \#2} = \frac{12{,}000}{80{,}000} \times 1250 \text{ cfm}$$
$$= 188 \text{ cfm}$$

Determining Duct Size

After calculating the airflow requirements for each room, the airflow through each duct section can be determined. See **Figure 29-48**. With the airflow rate and friction rate known, the required duct size can be determined using an airflow friction chart like the one shown in **Figure 29-49**.

Airflow friction charts are a graph of duct diameters, airflow rates, pressure drops from friction, and air velocities. Lines parallel to the vertical red dashed line in the figure represent airflow rates in cfm. Lines parallel to the blue line represent airflow velocities in fpm. Lines parallel to the horizontal yellow line represent pressure losses due to friction, and the lines parallel to the green line represent diameters of round duct. Reading an airflow friction chart is very similar to reading a standard psychrometric chart. If you know any two variables plotted on the chart, you can find their intersection. You can then determine the value of the other two variables.

Sizing Ducts Using the Friction Chart

Given the friction rate and air quantity through a section of duct, use the following procedure to determine the correct duct size.

1. Find the point where the friction rate (left side of chart) intersects the air quantity (bottom of chart).
2. Select either the closer or larger of the duct diameter lines the point falls between. The larger size will result in less friction and more airflow; the smaller size will result in more friction and less airflow.
3. Check the velocity based on the location of the point. Duct air velocities above 700 fpm can cause excessive noise. Air velocities at supply registers greater than 500 fpm may produce drafts. If the velocity is too high, follow the air quantity line down to the next higher duct diameter. If this point is at an acceptable velocity, use the larger duct diameter.
4. For rectangular sections of duct, convert the duct diameter to an equivalent rectangular size using the chart illustrated in **Figure 29-9**.

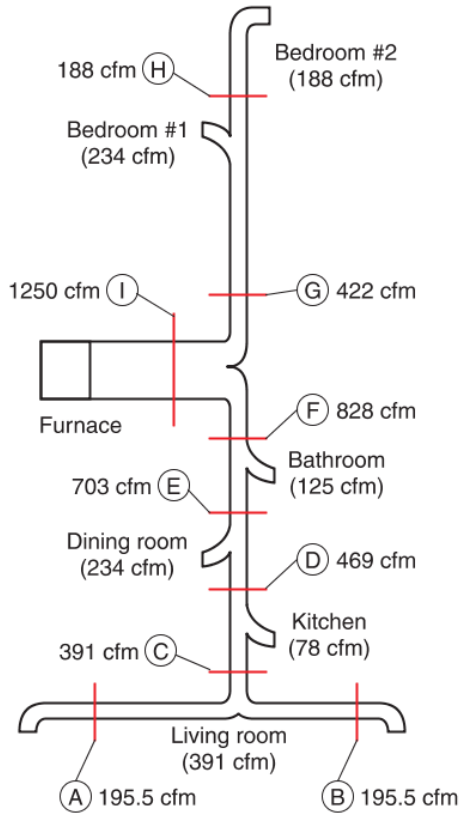

Goodheart-Willcox Publisher

Figure 29-48. Simple duct sketch with design air quantities noted for each duct section.

Example:

Determine the size of duct diameter to use for the duct cross sections labeled A through H in **Figure 29-48**. The system has a friction rate of 0.06 in. WC/100′.

Solution:

The table in **Figure 29-50** lists the air quantity at each duct section, and the chart shows a point plotted

Copyright Goodheart-Willcox Co., Inc.

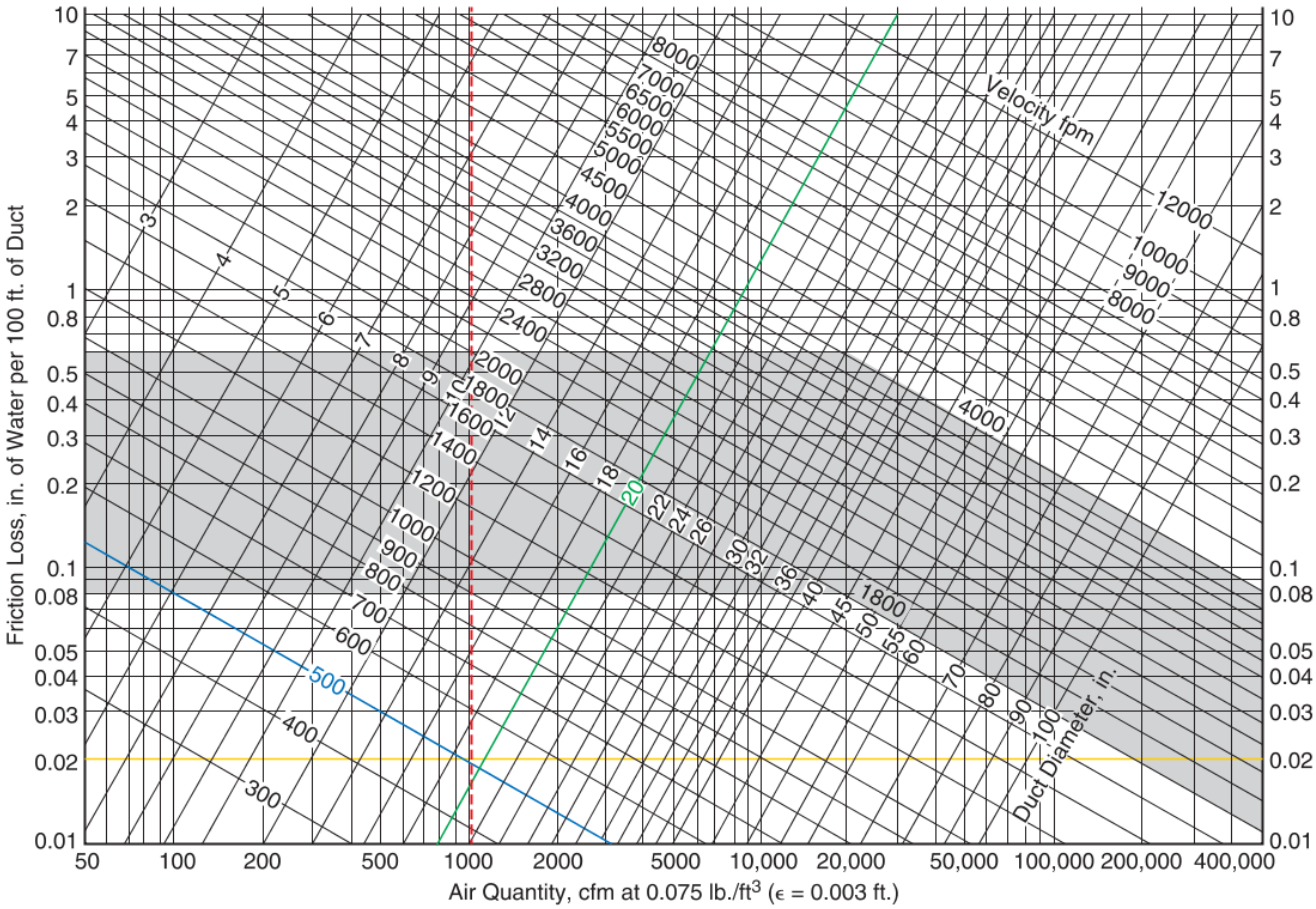

Reprinted with permission of the American Society of Heating, Refrigerating, and Air-Conditioning Engineers, Atlanta, Georgia, from 1993 ASHRAE Handbook—Fundamentals.

Figure 29-49. Friction chart for airflow in ducts. Low-volume airflow is indicated by the 50 to 2000 cfm range. High-volume airflow is in the range above 2000 cfm.

for each quantity at the design friction rate. The selected duct diameters are listed in the table.

Pro Tip

Duct Calculators

Mobile device apps and programs may be used in place of duct calculators and airflow friction charts. These may be used to determine duct sizes. These tools provide the same basic information.

29.5.3 ACCA Manual D

The Air Conditioning Contractors of America (ACCA) is a non-profit organization of HVAC contractors and professionals. ACCA writes standards and procedures for the design, testing, performance, and installation of HVAC systems. ACCA's ***Manual D*** was developed to be used to design both the supply and return ducts of a building.

The Manual D spreadsheet has worksheet tabs for effective losses, friction rate, and duct sizing. The effective losses for various supply and return fittings are located in group tabs. Each supply and return fitting is assigned an effective length, which is input into the appropriate group line, **Figure 29-51**. The output of the worksheet yields a design total effective length for both the supply and return ducts, **Figure 29-52**.

The total effective length of the supply and return duct systems is input into the Friction Rate Worksheet. Blower cfm and component pressure losses are input by the user to generate a Friction Rate Design Value, **Figure 29-53**.

The duct sizing worksheet requires the input of the heating and cooling load for each supply run. The program will automatically generate duct sizes for

Copyright Goodheart-Willcox Co., Inc.

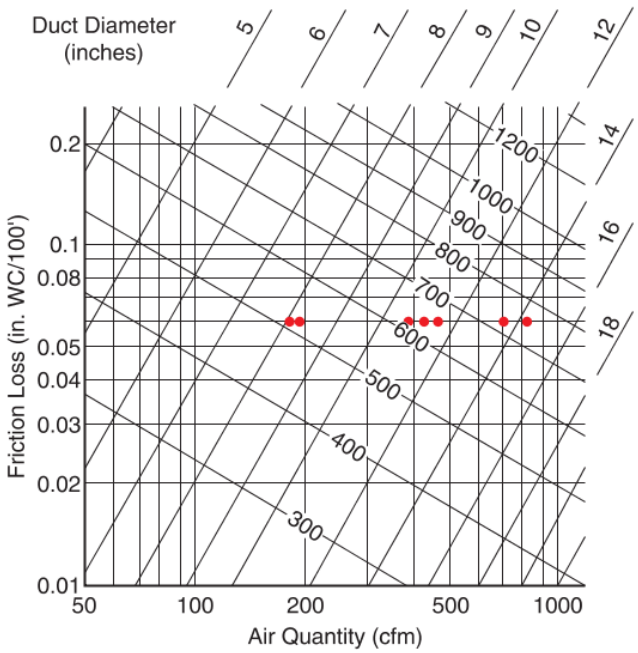

Selected Duct Diameter for Duct Sections		
Duct Section	Air Quantity (cfm)	Duct Diameter (inch)
A	196	8
B	196	8
C	391	12'
D	469	12'
E	703	16'
F	828	16'
G	422	12'
H	188	8

Note 1: Larger duct size used to ensure velocity is less than 700 fpm.

Goodheart-Willcox Publisher

Figure 29-50. Duct diameters are determined using the airflow friction chart. Red dots represent the intersection of the air quantity in the duct section and the design friction loss.

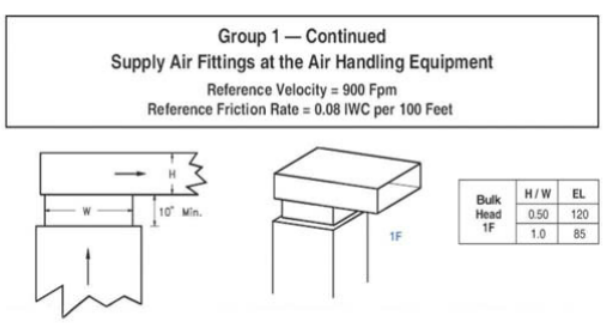

ACCA – The Indoor Environment & Energy Efficiency Association

Figure 29-51. Example of supply and return duct fittings group assigned effective lengths.

round metal ducts. If rectangular ducts are used, enter the height in the column, and the duct size will be calculated. The last column will show the equivalent size for a flexible duct, **Figure 29-54**.

There are several other alternatives to manual calculation of duct sizing, including duct sizing services, smart phone apps, and tablet calculators. Apps often allow the user to take a screen shot of the final design numbers and save it for future reference. Physical and online duct calculators are popular and easy to use. These allow the user to input basic information to determine duct sizes, **Figure 29-55**.

Smart phone and tablet apps provide the service technician with the mobility to quickly generate duct sizing while on the jobsite. They are also useful to determine if the existing ductwork in a building is sized correctly. **Figure 29-56** illustrates one type of smart phone app.

More detailed duct sizing can be accomplished by using sophisticated software programs. There are several ACCA-approved software programs that utilize Manual D standards. These programs allow the HVAC duct designer to input building configurations, heating and cooling loads, and generate a floor plan that includes duct routing and sizing. Programs are also available that generate a final bill of material and cost estimate for project. The user can customize the duct routing based on the layout of the building. Supply and return trunks can be added or deleted as the program automatically balances the system overall cfm and duct size. **Figure 29-57** shows the duct layout generated by one type of program.

29.6 Fans

Air movement is generally produced by some type of fan. Usually, fans are located in the inlet of the air handler. Air can be moved by creating positive pressure. It can also be moved by creating negative pressure. All fans produce both conditions. Negative pressure is generated at a fan's air inlet, and positive pressure is created on the exhaust side of the fan. See **Figure 29-58**. The air flowing into a fan is called ***induced draft*** and the exhaust from a fan is called ***forced draft***.

Fans are constructed of metal and plastic. There are several types of fans, but the two most popular types are the ***axial flow fan*** (propeller fan) and the ***radial flow fan*** (centrifugal fan). If air leaves the fan along the direction the axle is pointing, it is called axial flow. If air leaves the fan at right angles to the axle, it is called radial flow. This is shown in **Figure 29-59**.

Copyright Goodheart-Willcox Co., Inc.

Effective Length Worksheet								
Element	Supply Run ID Number							
Straight Run								
		Length		Length		Length		Length
Trunk Length								
Trunk Length								
Trunk Length								
Runout Length								
Fittings	Group Letters	Effective Length	Group Letters	Effective Length	Group Letters	Effective Length	Group Letters	Effective Length
Group 1 ◄								
Group 2 ◄								
Group 3 ◄								
Group 4 ◄								
Group 8 ◄								
Group 9 ◄								
Group 11 ◄								
Group 12 ◄								
Other								
Other								
Other								
Other								
Other								
Total Length		0		0		0		0
Design TEL	0							
Element	Return Run ID Number							
Straight Run								
		Length		Length		Length		Length
Trunk Length								
Trunk Length								
Trunk Length								
Runout Length								
Fittings	Group Letters	Effective Length	Group Letters	Effective Length	Group Letters	Effective Length	Group Letters	Effective Length
Group 5 ◄								
Group 6 ◄								
Group 7 ◄								
Group 8 ◄								
Group 10 ◄								
Group 11 ◄								
Group 12 ◄								
Other								
Other								
Other								
Other								
Total Length		0		0		0		0
Design TEL	0							

ACCA – The Indoor Environment & Energy Efficiency Association

Figure 29-52. Manual D Effective Length Worksheet. Trunk lengths and fitting effective lengths are input. Output is the total effective length.

Copyright Goodheart-Willcox Co., Inc.

Friction Rate Worksheet		
Step 1) Manufacturer's Blower Data		
External Static Pressure (ESP)		IWC
CFM from manufacturers tables	Heating	Cooling
Fan Speed	Med	High
Step 2) Component Pressure Losses (CPL)		
Direct expansion refrigerant coil		
Electric resistance heating coil		
Hot water coil		
Heat exchanger		
Low efficiency filter		
High or mid-efficiency filter		
Electronic filter		
Humidifier		
Supply outlet		
Return grille		
Balancing damper ◄		
UV lights or other device		
Total Component Losses (CPL)	Error	IWC
Step 3) Available Static Pressure (ASP)	#VALUE!	IWC
Step 4) Total Effective Length (TEL)	0	Feet
Step 5) Friction Rate Design Value (FR)	#VALUE!	IWC/100

ACCA – The Indoor Environment & Energy Efficiency Association

Figure 29-53. Manual D Friction Rate Worksheet.

An axial flow fan is usually direct-driven by mounting fan blades on the motor shaft. These fan blades should be handled carefully. If they are bent or twisted, the fan should be replaced. A four-blade axial flow fan is shown in **Figure 29-60**.

Radial flow fans are commonly referred to as squirrel cage fans. Radial flow fans can be directly driven by a fan motor or can be driven by a belt and pulley system. In direct-drive radial flow fans, the motor shaft is connected directly to the hub of the fan. Belt-driven fans use a pulley on the motor shaft and a pulley on the fan shaft. The ratio of the fan pulley to the motor pulley can be adjusted to multiply torque or to multiply fan speed. A belt-driven radial flow fan assembly is shown in **Figure 29-61**.

The Air Movement and Control Association, Inc. (AMCA) has developed four classifications of fan. These are based on fan air pressure output. Total fan pressure is the pressure differential between the inlet and the outlet of a fan. A chart listing the four classes of fans and their pressure levels is shown in **Figure 29-62**.

Radial flow fans have either backward-inclined blades or forward-inclined blades. Large fans typically have backward-inclined blades. If the blades were forward-inclined, they would not be able to handle the weight of the load. Smaller fans typically have forward-inclined blades. See **Figure 29-63**.

Static pressure increases by the square of the factor of increase in the airflow rate. To determine the increase in static pressure when airflow has increased, first determine the factor by which airflow rate has increased. For example, if a fan's output is doubled from 1000 cfm to 2000 cfm, the factor of increase is 2. This is calculated by dividing 2000 cfm by 1000 cfm.

$$2000 \text{ cfm} \div 1000 \text{ cfm} = 2$$

Copyright Goodheart-Willcox Co., Inc.

Duct Sizing Worksheet 1												
Supply Side Runouts										Equiv Rec. Ducts		Equiv. Flex
ID	Room ID	H - Btuh	C - Btuh	Htg cfm	Clg cfm	Dsn cfm	Size	fpm	Final size	Height	Width	
SR1												
SR2												
SR3												
SR4												
ID	Supply Side Trunks					Dsn cfm	Size	fpm	Final size	Equv Rec. Ducts		Equiv. Flex
	1	2	3	4	5					Height	Width	
ST2												
ST3												
ST4												
Return Side Runouts										Equiv Rec. Ducts		Equiv. Flex
ID	Room ID	H - Btuh	C - Btuh	Htg cfm	Clg cfm	Dsn cfm	Size	fpm	Final size	Height	Width	
RR1												
RR2												
RR3												
RR4												
ID	Return Side Trunks					Dsn cfm	Size	fpm	Final size	Equv Rec. Ducts		Equiv. Flex
	1	2	3	4	5					Height	Width	
RT2												
RT3												
RT4												

Goodheart-Willcox Publisher

Figure 29-54. Manual D Duct Sizing Worksheet.

Copyright Goodheart-Willcox Co., Inc.

Next, calculate the square of the factor of airflow rate increase. Since 2 was the factor determined, square the number 2.

$$2^2 = 2 \times 2$$
$$2^2 = 4$$

Lastly, multiply the static air pressure for the original airflow rate of 1000 by the square of the airflow

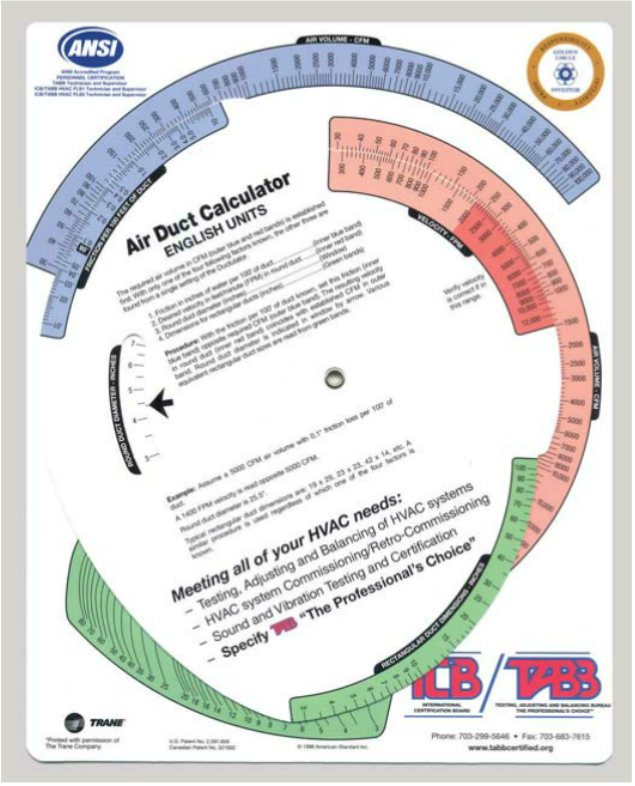

A

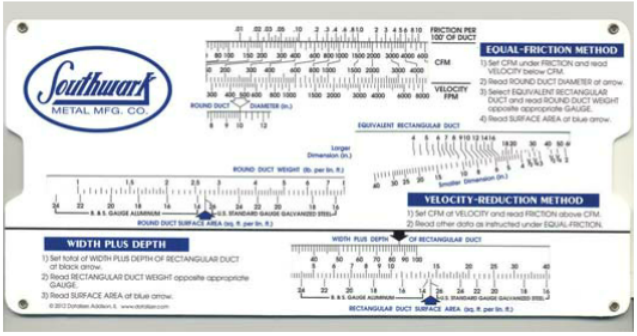

B

Goodheart-Willcox Publisher

Figure 29-55. Duct calculators. A—By turning the inner wheel, a technician can determine the air volume in cfm, friction rate, and velocity in fpm for different size ducts. B—By moving the inner slide, a technician can determine the air volume in cfm, friction rate, and velocity in fpm for different size ducts.

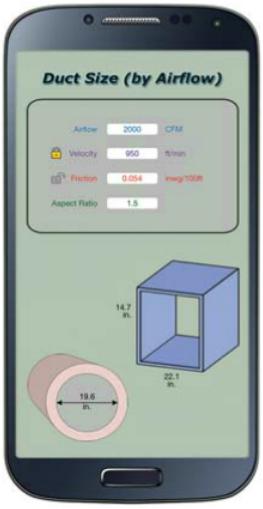

Cyber Prodigy LLC

Figure 29-56. Smartphone app used for duct sizing.

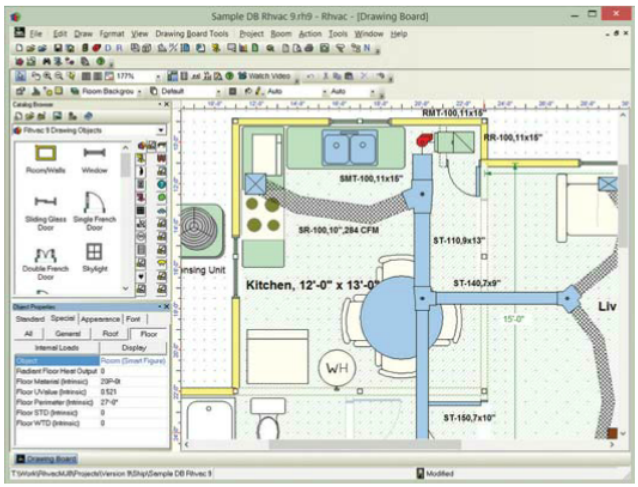

Elite Soft Inc.

Figure 29-57. Duct sizing and routing generated by a software program.

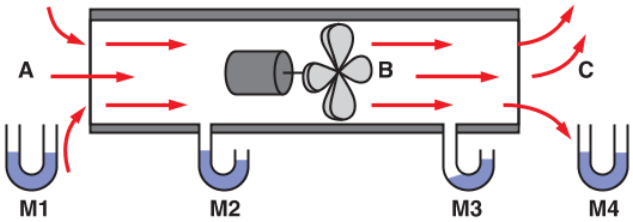

Goodheart-Willcox Publisher

Figure 29-58. A simple duct and fan installation. Negative pressure is generated on the intake side of the fan, and positive pressure is generated on the exhaust side of the fan. A—Intake. B—Fan and motor. C—Exhaust. M1—Atmospheric pressure. M2—Negative pressure. M3—Positive pressure. M4—Atmospheric pressure.

Copyright Goodheart-Willcox Co., Inc.

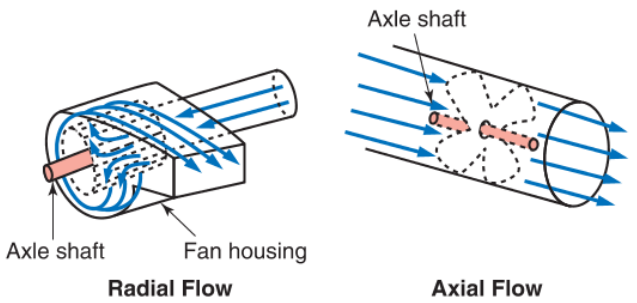

Goodheart-Willcox Publisher

Figure 29-59. Fans are divided into axial and radial categories based on the airflow they produce. Axial flow exits the fan parallel to the fan shaft. Radial flow exits the fan perpendicular to the fan shaft.

York International Corp.

Figure 29-60. A four-blade axial flow fan.

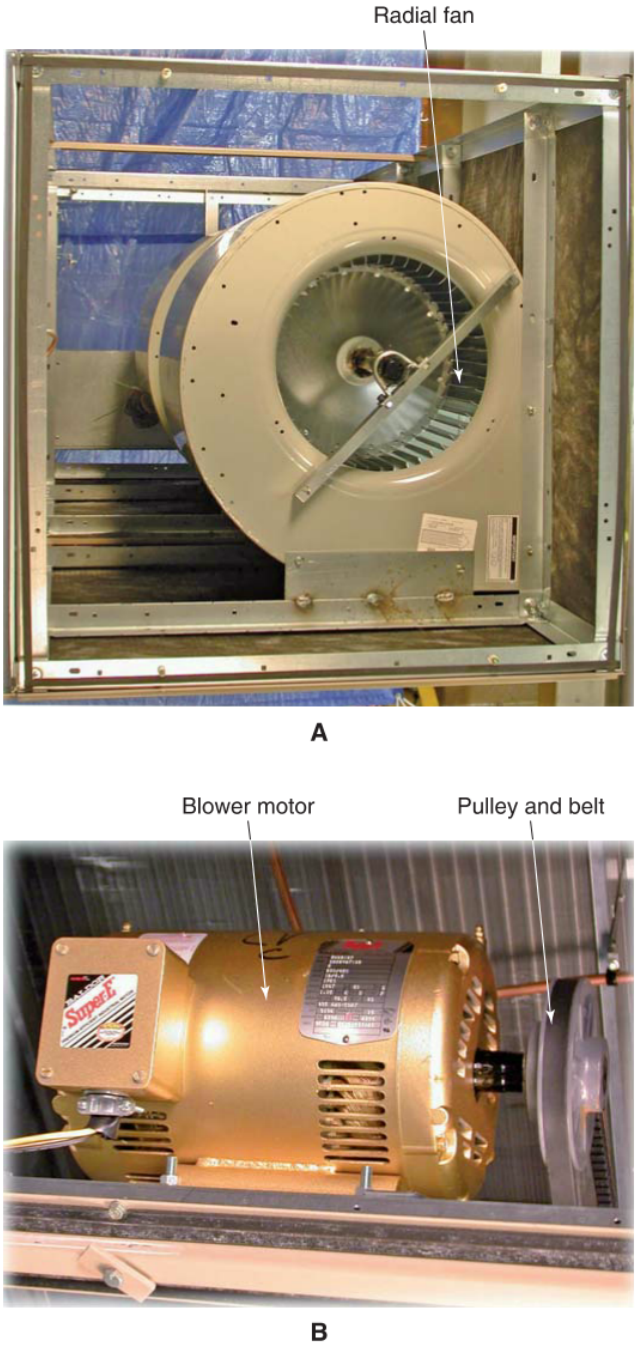

York International Corp.

Figure 29-61. Radial flow fan. A—A belt-driven fan in its housing. B—Belt-driven fans use a pulley on the motor shaft.

rate increase (4). In this example, airflow rate doubled, so the square of the increase factor was 4 ($2^2 = 2 \times 2$). If the increase factor was 3, then the square of the factor would be 9 ($3^2 = 3 \times 3$).

Since airflow rate is directly proportional to the speed at which the fan is turning, an increase in the fan's speed also results in an exponential increase in the static pressure produced by the fan. Increasing the static pressure against which a fan must operate reduces the amount of airflow delivered by the fan. **Figure 29-64** shows how to measure the pressure of a fan.

To determine the fan capacity for an air handler, use the following formula:

Output of air handler = 1.08 × temperature rise

The air temperature rise in °F is determined by subtracting the temperature of the air in the return ducts from the temperature of the air in the supply plenum. The 1.08 factor (the density of standard dry air of 0.075 lb/ft^3 × the specific heat of air 0.24 Btu/lb/F × 60 sec/min) is the total external static pressure.

For cooling, blowers are often sized to produce 400 cfm/ton of cooling capacity. For most residential

Copyright Goodheart-Willcox Co., Inc.

Fan Designations	
Classification	**Fan Pressure (in. WC)**
Low pressure, Class I	Less than 3 3/4″ (9.5 cm)
Medium pressure, Class II	3 3/4″–6 3/4″ (17 cm)
High pressure, Class III	6 3/4″–12 1/4″ (31 cm)
High pressure, Class IV	Greater than 12 1/4″ (31 cm)

Goodheart-Willcox Publisher

Figure 29-62. Fan classifications designated by the Air Movement and Control Association, Inc.

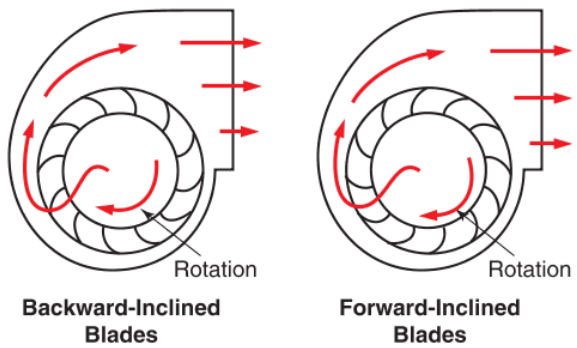

Goodheart-Willcox Publisher

Figure 29-63. Radial flow fan designs.

systems, the ***total pressure drop*** (the difference between the supply air duct static pressure and the return air duct static pressure) must not exceed 0.5 in. WC.

29.7 Air Curtains

Certain buildings have garage doors, delivery docks, and similar boundaries that must be opened on a regular basis. These openings make it difficult to maintain the indoor climate. One method of reducing heat loss or gain is to install an air curtain across these openings.

An ***air curtain*** is a powerful stream of air blown across a building opening that reduces heat loss or gain. A powerful blower directs airflow across an opening, such as an open garage door. An air curtain may have a recirculation path so the same air continuously blows across the opening. It stops any natural flow of air from the building to the outside or any natural airflow from the outside air into the building. The purpose of an air curtain is to maintain inside air conditions by blocking the infiltration of outside air through an opening.

In commercial refrigeration, open display cases with refrigerated contents at supermarkets often use an air curtain to keep cool air from escaping.

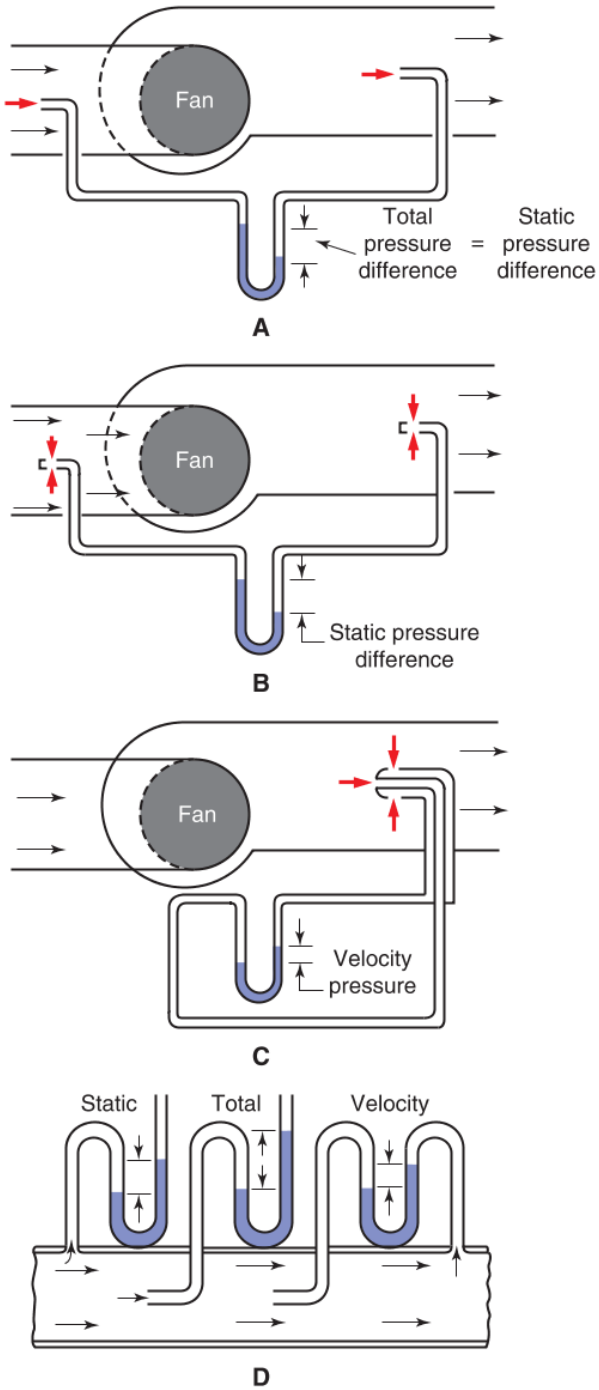

Goodheart-Willcox Publisher

Figure 29-64. Measurements of static, velocity, and total pressures are used to assess fan performance. A—The pitot tubes measure total pressure on both sides of the fan. The inlet velocity pressure equals outlet velocity pressure because the same airflow rate is produced on both sides of the fan. Therefore, the difference shown on the manometer is an increase in static pressure. B—This setup measures the static pressure difference between the inlet and outlet sides of the fan. C—This setup measures the velocity pressure. D—Some technicians measure pressure relative to room air pressure.

9

Copyright Goodheart-Willcox Co., Inc.

Chapter Review

Summary

- Before designing or installing an air distribution system, the weight of air, the manner in which air absorbs heat, and the way air separates into layers (stratification) should be considered.
- Two types of heat can be added or removed from air: latent heat and sensible heat. Devices such as humidifiers, dehumidifiers, and evaporative cooling systems can be used to modify air comfort by changing humidity levels. This can affect latent heat of an indoor climate.
- In warm air heating, the three basic systems used to circulate air are gravity, intermittent forced-air, and continuous forced-air. The gravity system is rarely used. Intermittent is common, and continuous is becoming more common.
- Air delivered to a room from a supply duct is called primary air. The distance the air travels from the duct outlet before it slows down to 50 fpm is called the throw.
- More return air leaving a room than supply air entering a room results in a negative pressure in the room. Return duct inlets should be located at the farthest distance from the supply duct outlets.
- Living spaces must have air with sufficient oxygen content. Bringing in replacement air through an air-conditioning system ensures that a definite amount of fresh air (makeup air) is brought in to provide a healthy oxygen level. This can be done using HRVs/ERVs or a damper-controlled fresh air inlet.
- Positive pressure (higher than atmospheric pressure) can be maintained in a building to help keep out airborne dirt, dust, and pollen. Negative pressure (below atmospheric pressure) should be avoided in most cases because it brings in outside contaminants and can reduce the efficiency of exhaust fans and of fuel-fired appliances.
- Ventilation is usually based on air changes per hour for a conditioned space. Air changes can be calculated according to the number of people in a building or by calculating building volume. The process that produces the greater number of changes per hour should be used.
- Attics can be vented or unvented. An unvented attic is closed off and essentially made into part of the conditioned space. A vented attic can achieve adequate airflow using louvers, various vents, ventilators, or a whole house fan. Basements often require ventilation to reduce dampness and prevent mold growth. How this is accomplished is based on outdoor air conditions, building construction, the HVAC system, and other considerations.
- Ducts can have round, square, or rectangular cross sections. Round ducts are more efficient, but square or rectangular ducts conform better to building construction. Tables are available that compare the airflow capacities of rectangular and round ducts.
- Duct systems may be installed in basements, crawl spaces, attics, concrete slabs, and within false ceilings.
- Ducts are commonly made of galvanized sheet metal, because it is durable, inexpensive, and corrosion-resistant. Sheet metal joints must be airtight and strong. Ducts should be sealed using metal tape or mastic sealant. Never use duct tape to seal ductwork.
- Some ducts are made of nonmetal, such as fiberglass, textile, urethane, plastic, or sheetrock.
- The ratio of a duct's wide side to its narrow side is called the aspect ratio. An aspect ratio of 1:1 provides the smallest perimeter for any given cross-sectional area.
- Registers, grilles, and diffusers control airflow into and out of ducts and prevent large objects from entering the ducts.
- Duct dampers can be adjusted to balance airflow. Three common types are multiple-blade, butterfly, and split dampers.
- Fire dampers are designed to close automatically on detection of heat. Automatic fire dampers should be installed in all vertical ducts, as well as ducts passing through a firewall, in commercial and industrial buildings.
- When designing a duct system, install the air handler in a central location, keep duct runs as short as practical, and always install branches from the sides of a plenum, never the end.

Copyright Goodheart-Willcox Co., Inc.

- The effective length of a duct run is determined by adding the physical length of the ductwork to effective length values for each fitting in the duct run. Total effective length (TEL) is the greatest effective length for a supply duct run in a system added to the greatest effective length for a return duct run.
- With the airflow rate and airflow velocity known, a required duct size can be looked up on an airflow friction chart. Airflow friction charts are a graph of duct diameters, airflow rates, pressure drops from friction, and air velocities.
- ACCA's Manual D is used to design a building's supply and return air ducts. It includes spreadsheets for effective losses, friction rate, duct sizing, and other considerations. Other tools and apps are also available for sizing ductwork.
- Two common fan types are axial flow (propeller) fans and radial flow (centrifugal, squirrel cage) fans. If air leaves the fan along the direction the axle is pointing, it is called axial flow. If air leaves the fan at right angles to the axle, it is called radial flow. An air curtain is a stream of air blown across a building opening to reduce heat loss or gain.

Review Questions

Answer the following questions using the information in this chapter.

1. Air expands to fill a greater space as _____.
   A. relative humidity increases
   B. pressure drops
   C. temperature rises
   D. All of the above.
2. To bring fresh air into a building's conditioned space and minimize how much it might affect indoor temperature, use a(n) _____.
   A. barometric damper
   B. HRV or ERV
   C. motorized damper
   D. soffit vent and ridge vent
3. Return air inlets should be placed _____.
   A. always near the ceiling
   B. always along the floor
   C. the minimum distance from the supply duct outlets
   D. the maximum distance from the supply duct outlets
4. Negative pressure in a building _____.
   A. enhances the efficiency of exhaust fans
   B. helps keep out airborne pollen
   C. makes a fuel-fired furnace more efficient
   D. tends to bring in outside contaminants
5. A system in cooling mode should provide at least _____ cfm of air per person.
   A. 5
   B. 15
   C. 50
   D. 100
6. Which shape of ducts provides the least resistance to airflow?
   A. Hexagonal.
   B. Square.
   C. Rectangular.
   D. Round.
7. Which of the following is true of sheet metal ducts?
   A. They are used for warm air distribution.
   B. They are usually coated with zinc.
   C. They expand and contract as they heat and cool.
   D. All of the above.
8. The ratio of a duct's wide side to its narrow side is called the _____.
   A. effective length
   B. aspect ratio
   C. throw
   D. length ratio
9. A rectangular duct with a _____ aspect ratio can hold the maximum amount of air using the minimum amount of material.
   A. 1:2
   B. 2:1
   C. 1:1
   D. 3:1
10. To prevent oil canning when a blower starts and stops, _____ any large panels of sheet metal ductwork.
   A. cross-break
   B. doubly insulate
   C. perforate with vent holes
   D. Use a reveted steel band to reinforce

Copyright Goodheart-Willcox Co., Inc.

11. _____ are usually used as covers for return air ducts and have no adjustments.
    A. Diffusers
    B. Grilles
    C. Registers
    D. Dampers
12. A _____ damper is used in round ducts.
    A. butterfly
    B. globe
    C. multiple-blade
    D. split
13. A fire damper rated for a 2-hour to 4-hour hold is classified as Class _____.
    A. A
    B. B
    C. C
    D. D
14. Installing long-radius elbows in ducts _____.
    A. maximizes airflow turbulence
    B. minimizes airflow turbulence
    C. minimizes airflow velocity
    D. All of the above.
15. Which of the following is a general guideline for duct design?
    A. Make duct runs as long as possible.
    B. Whenever possible, install a duct in the end of a plenum.
    C. Install the blower in a central location.
    D. All of the above.
16. Which of the following are *not* found on airflow friction charts?
    A. Duct diameters.
    B. Pressure drops from friction.
    C. Air velocities.
    D. Heat load.
17. To determine the _____ of a duct run, add the physical length of the ductwork to the effective length values for each fitting in the duct run.
    A. effective length
    B. friction rate
    C. heat load
    D. total pressure drop
18. Duct air velocities above _____ fpm can cause excessive noise.
    A. 50
    B. 150
    C. 500
    D. 700
19. The air flowing into a fan is called the _____ draft.
    A. forced
    B. induced
    C. axial
    D. radial
20. The ACCA developed Manual _____ to be used to design both the supply and return ducts of a building.
    A. A
    B. D
    C. J
    D. N

Copyright Goodheart-Willcox Co., Inc.

GrayWolf Sensing Solutions, LLC

A portable indoor environment monitor can be used to identify ventilation and sick building syndrome problems. IAQ monitors can measure the concentrations of several airborne contaminants.

Copyright Goodheart-Willcox Co., Inc.

CHAPTER 30 Ventilation System Service

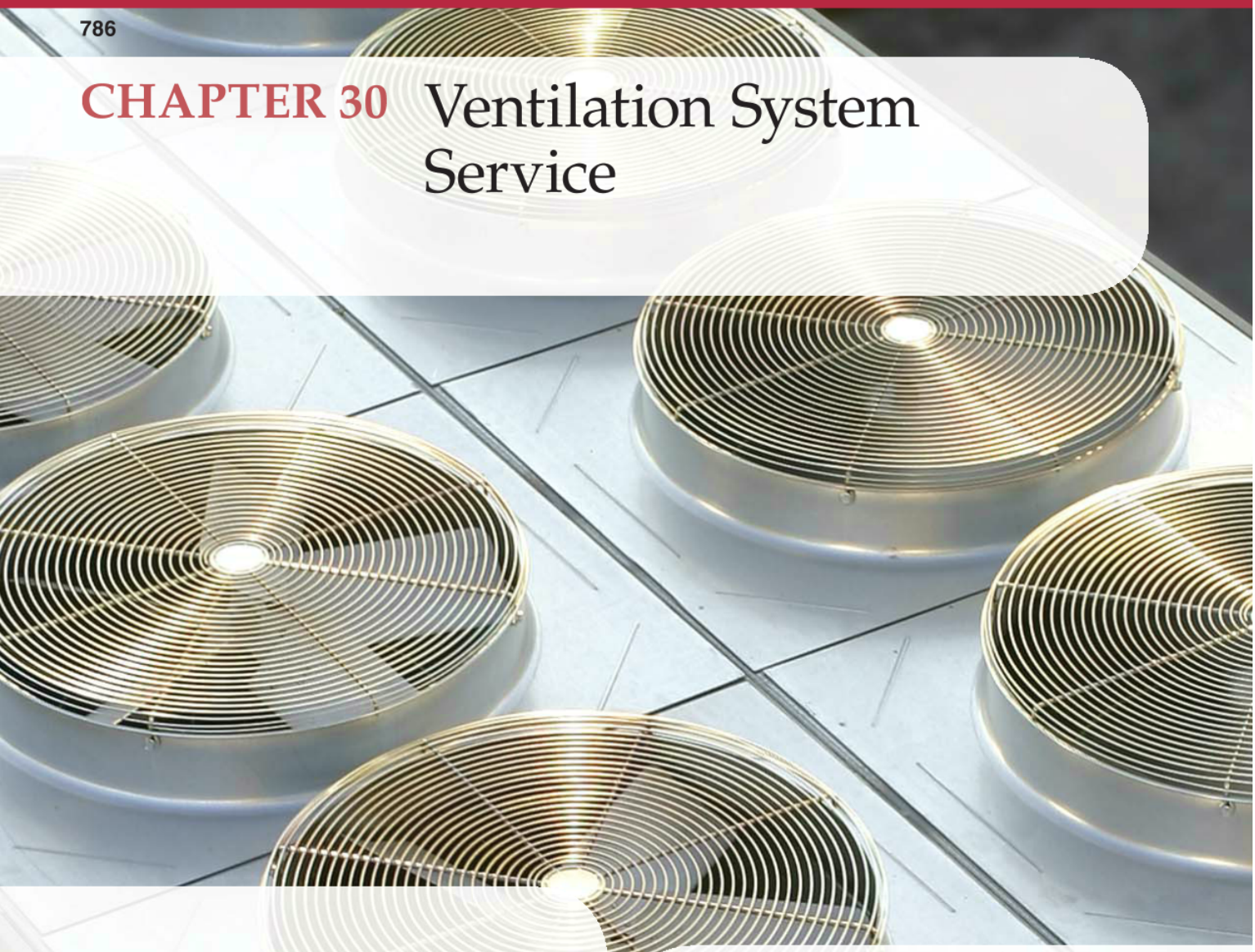

Chapter Outline

30.1 Airflow Measurement
- 30.1.1 Visible Airflow Indicators
- 30.1.2 Flow Hoods
- 30.1.3 Air Handler Flowmeter
- 30.1.4 Blower Door Testing
- 30.1.5 Duct Testing

30.2 Special Duct Problems and Duct Maintenance
- 30.2.1 Noise Problems
- 30.2.2 Drafts
- 30.2.3 HVAC System Cleaning
- 30.2.4 Balancing the System
- 30.2.5 Dirt on Walls and Drapes
- 30.2.6 Removing Odors

30.3 Fan Service

30.4 Filter Service
- 30.4.1 Service of Disposable Filters
- 30.4.2 Service of Electrostatic Filters
- 30.4.3 Service of Electronic Air Cleaners

Learning Objectives

Information in this chapter will enable you to:

- Recall the various methods for checking airflow and air leakage.
- Explain how to identify, isolate, and correct duct noise problems.
- Use proper equipment and techniques to clean a duct system.
- Apply knowledge of airflow to balance a duct system.
- Recall methods of removing odors from the air.
- Summarize periodic maintenance tasks that must be performed on fans.
- Explain procedures for inspecting and servicing various types of air filters.

Technical Terms

access tools
ACH_{50}
air change
air handler flowmeter
balancing
blower door testing
cfm_{25}
cfm_{50}
clean room
cleaning tools
duct blaster
duct booster
duct sweeper
duct testing
flow hood
inspection tool
noise absorber
noise amplifier
noise carrier
noise source
thermal precipitation
WRT

Review of Key Concepts

Reviewing these concepts from earlier chapters will help you understand new concepts presented in this chapter:

- Air circulation depends on the number and size of the duct supply outlets and return inlets. It also depends on the velocity of the air moving through the supply outlets. (Chapter 29)
- Air that flows from a supply register at more than 500 fpm causes occupants of the space to feel a draft. (Chapter 29)
- Blower fans can be directly driven by the fan motor or can be driven by a belt and pulley system. (Chapter 29)

Introduction

Air distribution systems are designed to circulate clean air without causing discomfort to the occupants. Two common air circulation issues are drafts and noise. Monitors are available to determine sources of noise or drafts.

The airtightness of a building envelope can be tested using blower door testing, which creates a pressure differential between the indoor and outdoor air. Ducts can be tested by pressurizing the ducts themselves. A system must be balanced to avoid inconsistencies in room temperatures and humidity.

Air ducts present a potential indoor air quality (IAQ) issue. They must be monitored for contaminants. The technician should take care to check air filters for cleaning and replacement.

Video

- Ventilation System Maintenance

30.1 Airflow Measurement

Special instruments are needed to measure the flow and pressure of air. Many of these air-measuring instruments were explained in Chapter 27, *Air Movement and Measurement*, along with suggested positions for placing air-measuring instruments over grilles. In addition to thermometers and pressure gauges, the following instruments are useful for airflow study:

- Manometer, **Figure 30-1**.
- Barometer.
- Pitot tube.
- Anemometer.
- Smoke (as a velocity or leak indicator).
- Hot-wire anemometer.

Dwyer Instruments, Inc.

Figure 30-1. This digital manometer measures, records, and stores differential pressure and air velocity readings electronically. The two upper parts of the high and low pressure inputs for measurement.

To determine airflow rate, both the air velocity and the size of the opening must be determined. The grille opening size is the area of the opening, **Figure 30-2**. The grille mesh or bars are not considered when determining the opening size.

30.1.1 Visible Airflow Indicators

Drafts of 15 fpm to 25 fpm are allowable within a room. If air movement is less than 15 fpm (4.6 m/min), air stagnation results. Air movement more than 500 fpm at a supply register can cause occupants to feel a draft.

Smoke is used to determine the amount and direction of a draft, to check air movement, and to locate air leaks. Smoke generators release small puffs of smoke into the space being tested. The distance the puffs move in a given time is then observed. Because this is an imprecise measurement, several readings are taken and averaged.

Safety Note

Smoke Generators

Some chemicals used to generate smoke present health hazards if precautions are not taken. Carefully read and follow all safety warnings provided in the manufacturer's information. Always wear goggles, rubber gloves, and a respirator when handling these materials.

Nontoxic smoke sticks, smoke guns, and smoke candles are used for testing. Sticks and candles are ignited and placed in the air distribution system intake

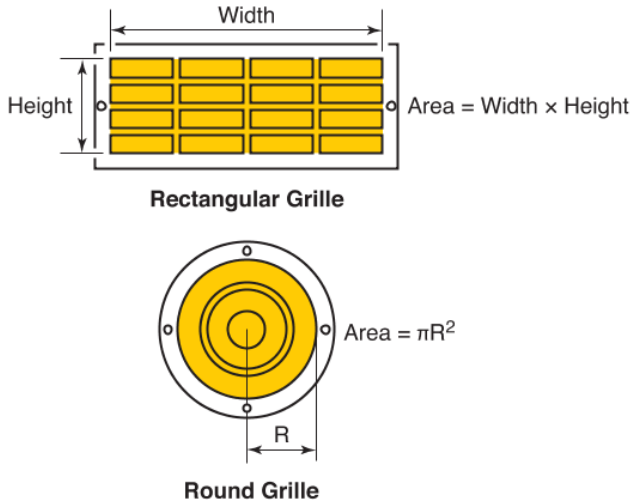

Goodheart-Willcox Publisher

Figure 30-2. Area to be measured when calculating the volume of air leaving a grille. The area does not include the rim of the grille, but does include strips of metal inside.

Copyright Goodheart-Willcox Co., Inc.

with the filter removed. The distribution of air and air balance can then be observed in the system. The smoke can also be used to check for window and door leaks, as well as refrigerator door seals. Although the smoke is nontoxic and harmless to clothing and the building's contents, long exposure to it is not recommended. Avoid using too much smoke.

30.1.2 Flow Hoods

Airflow can be measured using various instruments. A ***flow hood*** is an instrument used to direct and calculate all of the airflow through a duct at a given supply or return. These devices have sensors that are primarily used to determine air velocity and air volume. Many can also measure temperature, relative humidity, and other variables. These often have remote control devices or connectivity to mobile devices, **Figure 30-3**.

30.1.3 Air Handler Flowmeter

Airflow through a central HVAC system's air handler can be measured using an ***air handler flowmeter***. These devices are placed in the air stream of an air handler to measure the total airflow of a central system. Air handler flowmeters are typically sized to fit over a large return grille or in the space normally occupied by the system's air filter, **Figure 30-4**.

30.1.4 Blower Door Testing

To measure air leakage, a technician must first create a pressure difference. This may be a difference between the outdoors air pressure and that of the conditioned space, or a difference between the pressure inside a duct system and that of a conditioned space. The initials ***WRT*** stand for the phrase *with respect to* and are used to indicate the reference to which a pressure reading is being compared.

Blower door testing is used to determine the airtightness of the building envelope. When conducting a blower door test, a technician uses a powerful fan to create a pressure difference between the interior of the structure and the outdoors. The negative pressure created indoors causes the higher-pressure outside air to flow in through cracks and openings. The technician then measures the amount of air flowing through the structure at a specified pressure. This amount of air is a measure of the airtightness of the building envelope.

The building envelope consists of the components of the structure, such as walls or floors, separating conditioned space from unconditioned space. Two key components of the building envelope are the insulating value of the structure and its air barrier. A "tight" building envelope minimizes the amount of unconditioned air passing through into conditioned space. A tight building envelope has no gaps in its insulation and air barrier.

TSI Incorporated

Figure 30-3. An airflow hood raised to a ceiling supply register being monitored using a mobile device.

Code Alert

Building Envelope

Local building codes specify the requirements for the building envelope. These specifications can be very detailed, describing the minimum standards for selecting and installing insulation and air barriers in the various areas of a building. These regulations take into consideration the requirements of the space and the local climate.

Copyright Goodheart-Willcox Co., Inc.

TSI Incorporated

Figure 30-4. Two common sizes of air handler flowmeters used to measure total airflow through a central HVAC system.

A blower door test shows how effectively the building envelope prevents unconditioned air from infiltrating conditioned space. Blower doors can be used to find air leakage sites in the building envelope, to test the air leakage rate of the building as a whole, and to test the airtightness of the duct system.

A blower door system has several components:

- An adjustable door frame fitted with a hard or fabric panel.
- A variable-speed fan attached to the blower door frame.
- A manometer to measure the pressure difference between the interior of the building and the outdoors.
- Airflow sensors to measure the airflow through the fan.
- Inserts of various size used to adjust the fan's capacity (available with some blower door systems).

Pro Tip

Preparing for a Blower Door Test

When you are preparing a house for a blower door test, keep a list of adjustments you make, such as closing dampers and opening registers. After performing the test, use your list to ensure that you return the house to its pretest condition.

Performing a Blower Door Test

Blower door test procedures are specific for each model of blower door. Always follow the blower door manufacturer's procedure when performing a blower door test. The following procedure is typical of blower door tests.

1. Prepare the house for testing:
   - Exterior windows and doors are closed.
   - Interior doors are open.

Copyright Goodheart-Willcox Co., Inc.

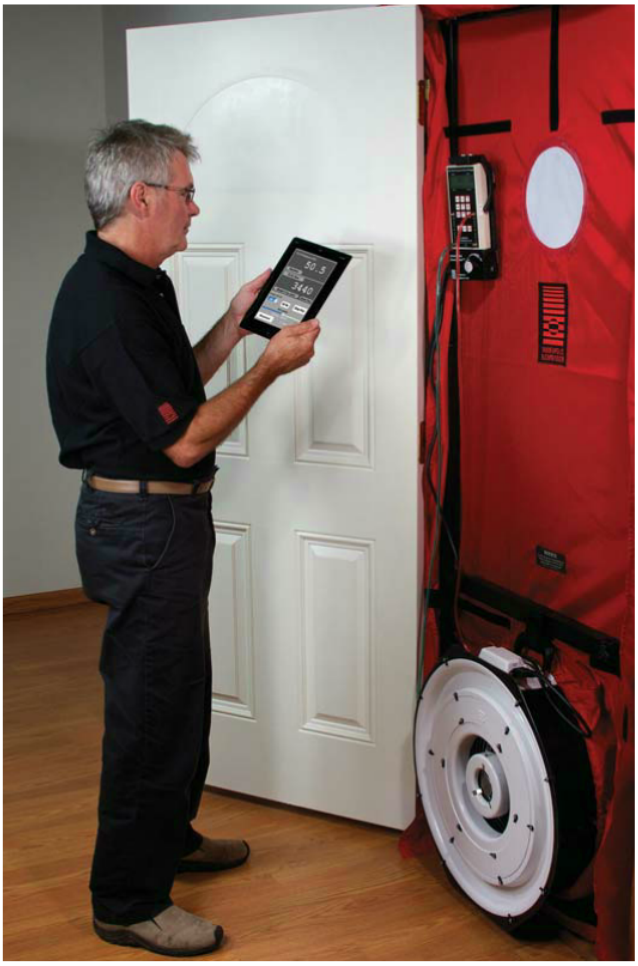

The Energy Conservatory

Figure 30-5. A blower door system being used to test building airtightness with measured readouts on a mobile device.

- Dampers (exhaust, intake, makeup air, backdraft, and flue) are closed.
- Exterior dampers for fresh air, continuous ventilation systems, and HRVs/ERVs are closed and sealed.
- Heating and cooling systems are turned off.
- Combustion appliances are turned off.
- Exhaust appliances are turned off.
- Fireplaces and wood stoves are extinguished, and ashes are cleaned.
- All supply air registers are fully opened.

2. Install the blower door assembly with the fan blowing out of the house, **Figure 30-5**.
3. Block the fan opening in the blower door and measure the "baseline" pressure difference between the interior and exterior: _____.
   For the outdoor measurement, place the end of the manometer tube away from the buildings wall in a location protected from any wind.
4. After the baseline pressure difference is recorded, remove the fan cover and attach a fan insert (if provided).
5. Activate the fan and adjust the speed until an interior pressure of –25 Pa with respect to (WRT) outdoors is achieved.
6. While the pressure is at –25 Pa, perform a walk-through of the house to make sure that no damage is occurring.
7. Increase the fan speed until an interior pressure of –50 Pa WRT outdoors is achieved.
8. Record or measure the airflow through the fan at the –50 Pa pressure. This airflow value is called cfm_{50}: _____.
9. Turn off the blower door fan.
10. Return all equipment in the house to its original conditions.

An ***air change*** occurs when the volume of air within a building is replaced with an equal volume of air. When performing a blower door test, an air change occurs when the volume of air that has passed through the blower door fan equals the volume of air within the building envelope. As described in the earlier procedure, $\boldsymbol{cfm_{50}}$ is the measured airflow through a blower door fan when indoor pressure is held at –50 Pa WRT outdoors. This cfm_{50} measurement is used to calculate the number of air changes per hour (ACH). This number of air changes when indoor pressure is held at –50 Pa WRT outdoors is referred to as $\boldsymbol{ACH_{50}}$ (number of air changes at a 50 Pa pressure difference). The formula for calculating ACH_{50} is as follows:

$$ACH_{50} = \frac{cfm_{50} \times 60 \text{ min/hr}}{\text{Volume of conditioned space (ft}^3\text{)}}$$

Code Alert

Allowable ACH

The *International Residential Code* (*IRC*) and the *International Energy Conservation Code* (*IECC*) specify a maximum ACH_{50} of three for most of the United States and Canada. The codes allow an ACH_{50} of five in some warmer regions. Refer to the codes for the requirement that pertains to the specific building location.

During a blower door test, the air infiltration into a house is greater than normal due to the depressurization of the house. Therefore, infiltration sites can be

9

Copyright Goodheart-Willcox Co., Inc.

more effectively located while conducting the blower door test. Thermal imaging or smoke generators, such as smoke sticks or smoke candles, can be used to pinpoint air leaks, **Figure 30-6**. Thermal imaging is discussed in Chapter 46, *Energy Conservation*.

Blower door testing is sometimes used together with duct blasters (air duct blowers). Duct blasters are part of an airflow measurement system designed to determine the airtightness of duct systems.

Code Alert

Third-Party Blower Door Testing

The *International Energy Conservation Code* (*IECC*) states that testing must be conducted by an approved third party where required by the code official. Certification may be achieved through agencies such as the US EPA Energy Star program and the Building Performance Institute.

DiversiTech Corporation

Figure 30-6. Smoke-emitting devices are available in a variety of packages and styles.

30.1.5 Duct Testing

To be efficient, ductwork must be properly sealed. Ducts are tested to locate leaks or damage so that problem areas can be repaired.

Code Alert

Duct Testing Requirement

When the air handler and ductwork are contained within the building envelope, duct testing is not required.

Duct testing is performed by pressurizing the ducts themselves. Duct airflow is then measured to determine leakage. A ***duct blaster*** is an instrument that uses a variable-speed fan and gauges to pressure test the ductwork of a central HVAC system. A fan connected to the duct system forces air through all the cracks and openings in the ductwork. Precise leakage measurements are then made using pressure gauges connected to the system, **Figure 30-7**.

After all registers and grilles have been sealed, a fan with calibrated pressure gauges supplies a gentle flow of air into the sealed duct system. The ducts are pressurized to +25 Pa WRT the conditioned space. The airflow needed to obtain –25 Pa in the conditioned space is referred to as cfm_{25}. The pressure gauges then indicate how much pressure is escaping from the system.

The following equation is used to calculate the allowable cfm:

$$\text{cfm}_{25} = \frac{\text{Conditioned space (ft}^2\text{)}}{100\ \text{ft}^2} \times \text{Maximum leakage (cfm)}$$

The Energy Conservatory

Figure 30-7. A duct blaster pressure testing a central HVAC system's ductwork.

Copyright Goodheart-Willcox Co., Inc.

Code Alert

Maximum Duct Leakage

The *International Energy Conservation Code (IECC)* specifies a maximum duct leakage of 4 cfm per 100 ft^2 of conditioned space when the ducts are pressurized to 25 Pa. If the ductwork is tested before the air handler is installed, the maximum duct leakage is 3 cfm per 100 ft^2 of conditioned space.

Pro Tip

Duct Pressure Testing

Duct pressure testing treats all duct leaks as being equal. However, all duct leaks are not equal with regard to system efficiency. A duct leak in an unconditioned space is a much greater concern than a duct leak in a conditioned space. When installing and inspecting duct systems, make sure that ducts passing through unconditioned spaces are completely sealed.

30.2 Special Duct Problems and Duct Maintenance

Visible ducts may need to be painted for good appearance. Paint will not stick very well on galvanized (zinc-coated) steel. Wiping down the duct with vinegar or other weak acid before painting will etch the surface, allowing the paint to stick. If any ducts are outdoors, the weather will etch the surface. The duct can then be painted. Some contractors store ducts outside until they are needed, making use of the natural weathering.

The outdoor intake end of a fresh air duct should be fitted with a strong screen and bar combination. The fresh air intake must be guarded and filtered to keep out debris, birds, animals, and insects.

Aluminum-to-steel joints are especially prone to corrosion. This is due to electrochemical action between the two different metals. Joints between different metals should be avoided. However, if one must be made, slip a thin strip of zinc or magnesium into the gap between the two different metals. The zinc or magnesium will corrode before the aluminum or steel duct can be damaged.

City and state codes require smoke detectors in residential and commercial structures. These detectors must be properly located to be effective. High-velocity air from ducts can keep smoke detectors from working. When a long horizontal run of duct ending in an outlet grille is not concealed, the smoke detector should be hung on the underside of the duct. It should be located just behind the outlet grille. With other duct designs, such as residential wall, floor, or ceiling grilles, the duct is concealed. In these systems, smoke detectors should be as far away from the grilles as possible. Detectors should never be put in corners where there is almost no airflow.

Air distribution systems should be designed to circulate clean air while ensuring that the movement of the air does not cause discomfort to the occupants. Two common problems that must be prevented are objectionable noise and drafts.

30.2.1 Noise Problems

Noise problems can be divided into three components:

- Noise source.
- Noise carrier.
- Noise amplification or reflection.

The ***noise source*** is an audible vibration. This vibration may start in the heating unit, cooling unit, fan mechanism, duct panels, duct hangers, or grilles. Noise caused by air traveling through the ducts at high speed, causing air turbulence, is a common complaint. This is often the result of a blower that has been sped up in an attempt to compensate for an undersized heating or cooling system or duct.

A noise source is a vibration that is loud enough to be heard. This vibration may originate in the heating system, cooling system, or fan mechanism. Noise is produced by movement of an object or air movement against an object.

Sources include the following:

- Fans and motors.
- High-velocity air traveling through ducts and causing turbulence. This type of noise is often the result of an undersized unit or duct. Noise problems develop when the blower has been sped up to compensate for a lack of capacity.
- Vibrating duct panel. Alternate waves of low-pressure and high-pressure air are created, producing a sound similar to the hum of a mosquito. Duct noise can be very disturbing.
- Sucking and throbbing noises produced by compressors.
- High-velocity refrigerant flow, especially at sharp bends in piping.

Types of noise associated with air distribution systems include the following:

- A high-pitch sound. This is usually caused by an air velocity that is too high. It may be due to air hitting sharp metal edges.
- A low-pitch rumble. This is usually caused by fan and motor sounds traveling along the duct system.

Copyright Goodheart-Willcox Co., Inc.

- A popping sound when the unit starts or stops. This may be caused by expansion or contraction of the duct as it warms up or cools.

Noise carriers, or vibration carriers, are rigid structures that carry vibrations to places where the sound may be annoying. Floors, ceilings, ducts, doors, and pipes can all act as noise carriers.

Noise amplifiers, or reflectors, are usually hard, smooth surfaces like walls, ceilings, floors, and furnishings. Noise amplifiers can pick up a small vibration and reflect it at a frequency and direction that effectively increases the noise. Soft fabrics, such as drapes and curtains and fabric-covered furniture, are ***noise absorbers***, which are materials that mute noises. Felt-lined or soft-insulation-lined ducts also absorb noise.

Solving Noise Problems

To locate the source of a high-pitched sound, remove the grille or diffuser. If the noise stops, it is caused by sharp edges in the grille. If it continues, the air velocity is too high (use an anemometer to measure), or there is a sharp edge in the duct system. Locate the problem and correct it.

Where noise is a factor, the velocity should be kept to a minimum. If the velocity cannot be decreased, noise can be reduced by other means. An acoustical discharge chamber may be used. The ducts can be lined or wrapped with sound-absorbing material, such as felt.

30.2.2 Drafts

If a duct system is not balanced, air may enter a room at an excessive rate. Drafts are the result of air that flows past people at too high a velocity. Air velocity greater than 500 fpm at a register may result in a draft. Different methods can be tried to alleviate drafts from registers:

- If a register has adjustable louvers, adjust the louvers to direct airflow to a generally unoccupied space.
- Replace the register with one that diffuses the air more broadly.
- Adjust the damper in the duct run to reduce airflow to the register. However, this may upset the system balance, result in uneven heating or cooling from room to room.

30.2.3 HVAC System Cleaning

The benefits of a clean HVAC system include fewer health and comfort complaints by occupants, more effective system performance, reduced energy costs, and longer unit life. A program of regular maintenance and IAQ evaluation together with HVAC cleaning will reduce indoor air pollution.

A cleanliness inspection can reveal a variety of conditions that indicate a need for HVAC system cleaning. These conditions include a significant accumulation of contaminants, debris, or evidence of microbial growth. A discharge of visible particulates into the occupied space may be noted. Other signs that cleaning is required are restrictions or deposits of contaminants on heat exchange coils, cooling coils, airflow control devices, filtration devices, or air-handling devices, **Figure 30-8**.

For effective results, all portions of an HVAC system must be cleaned. HVAC systems are good breeding grounds for contaminants due to enclosed spaces, constant temperature, humidity, and dirt. Areas that often contain microbial contamination include the condensate drain pan, areas downstream of cooling coils, and areas around humidifiers.

The air handler should be inspected, including air filter, air bypass line, heat and cooling coils, condensate pans, condensate drain lines, humidification systems, acoustic insulation, fan and fan compartment, dampers, door gaskets, supply duct and components, and return duct and components. The inspection should not disrupt any settled dust or debris in order to prevent them from entering other spaces in the building. In sensitive environments, or if HVAC system contamination is suspected, environmental engineering controls should be implemented. Engineering controls include source control, isolation barriers, HEPA vacuuming, and filtration.

Duct Cleaning

Air ducts can be a breeding surface for bacteria, mold, mildew, and fungi. Duct systems should have

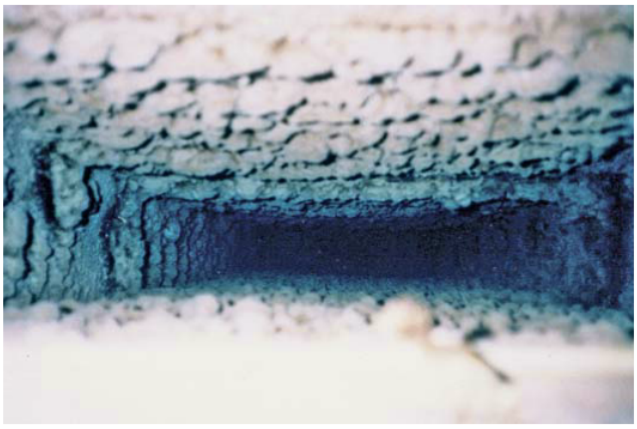

National Air Duct Cleaners Association (NADCA)

Figure 30-8. Accumulation of debris in ductwork.

Copyright Goodheart-Willcox Co., Inc.

no "dead ends" where dust and stagnant air can collect. If a duct must have dead space, a duct door for cleaning may be needed. Any section of duct, straight or not, will collect some dust. Reversing the direction of airflow can loosen some of the dust. The dust can then be caught in a filter. Periodic duct cleaning should be done to maintain proper airflow through the duct system.

Preparation for Duct Cleaning

The site must be prepared before ducts are cleaned. Occupant safety should be ensured by determining a containment strategy plan for removal of debris, particularly if occupants have respiratory sensitivities or other health concerns. Flooring, carpet, and tile should be protected. Computers or other office equipment, as well as furniture, should be covered, **Figure 30-9**.

Safety Note

Duct Cleaning

Use caution and wear protective gear to avoid inhalation or exposure to debris during the duct cleaning process. See **Figure 30-10**.

Tools for HVAC Cleaning

Tools for HVAC system cleaning include hand tools and power tools. Hand tools are divided into three categories: access tools, inspection tools, and cleaning tools.

Access tools allow the technician to create a point in the HVAC system from which to inspect and clean. Any openings made in the ductwork must be closed again when the inspection and cleaning is complete, **Figure 30-11**.

Inspection tools allow the technician to see inside the system in order to identify debris and contamination, monitor the cleaning process, and evaluate the success of the cleaning procedure. Such tools may include a telescoping handheld mirror, optical borescope, closed circuit television camera system, and a camera.

Handheld ***cleaning tools*** include brushes, scrapers, and agitation and vacuum devices. See **Figure 30-12**. A variety of brush heads may be required depending on the surface to be cleaned, **Figure 30-13**. Handheld HEPA vacuums can be used for removal of debris.

Caution

Cleaning Fiberglass-Lined Ductwork

Fiberglass-lined metal ductwork, flexduct, and ductboard can be damaged by aggressive cleaning techniques. Always clean carefully to avoid causing damage.

National Air Duct Cleaners Association (NADCA)

Figure 30-10. This technician is wearing protective gear to avoid exposure to contaminants and debris.

National Air Duct Cleaners Association (NADCA)

Figure 30-9. Preparation of interior space prior to duct cleaning.

National Air Duct Cleaners Association (NADCA)

Figure 30-11. This technician is using electric sheet metal shears to access a system prior to cleaning.

Copyright Goodheart-Willcox Co., Inc.

National Air Duct Cleaners Association (NADCA)

Figure 30-12. An agitation device being installed.

Heavy cleaning equipment includes vacuum collection devices, compressed air sources, handheld HEPA vacuums, and wet vacuums. Vacuum devices create a negative pressure in the HVAC system and trap airborne particles of debris. See **Figure 30-14**.

Vacuum devices may be mounted on trucks or trailers or may be portable units. Truck/trailer equipment is more powerful, but lacks the flexibility of portable equipment. Some tools for cleaning use compressed air to supply pressure. If a gasoline-powered compressor is used, it must be located outside the facility. Do not allow fumes to enter the building. Wet vacs (vacuums) are frequently used to remove microbial contaminants and sludge. If a wet vac exhausts inside the facility, it must be HEPA filtered.

Cleaning Ductwork

A three-step process is used to clean ductwork:

1. A ***duct sweeper*** is rotated through the sides of the ducts to release dust, mold, and mildew.
2. A high-velocity vacuum removes loose particles from the ductwork.
3. A microbial biocide is sprayed into the cleaned duct system to prevent mold and mildew buildup.

National Air Duct Cleaners Association (NADCA)

Figure 30-13. An agitation tool, such as this brush, is effective at removing dust from walls of ductwork.

National Air Duct Cleaners Association (NADCA)

Figure 30-14. A technician placing a vacuum into ductwork.

Copyright Goodheart-Willcox Co., Inc.

Filters should be checked, cleaned, or replaced if necessary to reduce future contamination. The final product should be a clean, debris-free system. See **Figure 30-15**.

30.2.4 Balancing the System

Balancing means sizing the ducts and adjusting the dampers to be sure that each room receives the correct amount of air. Conditioned air must be fed in the proper amounts to each room. Also, the correct amount of air must be returned. If the system is not balanced, rooms will maintain different temperatures, have incorrect relative humidity, or have stale air. Some ducts will be noisy.

In order to achieve balance, the air velocity leaving each grille must be measured. Then, the "free" area of the grille or diffuser is determined. The "free" area is the actual size of the air openings.

Balancing a System—Long Method

To balance a system, perform the following steps:

1. Inspect the complete system; locate all ducts, openings, and dampers.
2. Open all dampers in the ducts and at the grilles.
3. Check the velocities at each outlet.
4. Measure the "free" grille area.
5. Calculate the airflow rate at each outlet.

$$\text{airflow rate (cfm)} = \frac{\text{velocity (fpm)} \times \text{area (in}^2\text{)}}{144\ \text{in}^2/\text{ft}^2}$$

6. Add together the airflow rates from all outlets.
7. Determine the floor areas of each room. Add the square footage of all rooms together to determine the total square footage of the conditioned spaces.
8. Determine the portion of total airflow each room should have:

$$\text{cfm for room} = \frac{\text{area of room}}{\text{total floor area}} \times \text{total cfm}$$

9. Adjust duct dampers and grille dampers to obtain these values.
10. Recheck all outlet grilles.

In some cases, it may be necessary to overcome excess duct resistance. To do this, install a duct booster. A ***duct booster*** is a fan that increases airflow when a duct is too small or too long. They may also be used where a duct has too many elbows. **Figure 30-16** shows various air duct boosters.

Balancing a System—Short Method

An effective but simpler technique can be used to balance airflow to different rooms:

1. Place thermometers in each room. Locate the thermometers on tables away from sunlight, lamps, or any extra heat source. Make sure the temperature sensing element is not in contact with any surfaces or objects.
2. Adjust dampers until each room has the temperature desired. Allow several hours for the system to adjust to any damper change.

Remember, if one room is too warm, one or more others should be too cool. If the heating system is operating, close the dampers slightly in rooms that are too warm and open the dampers slightly in the cool rooms. If the cooling system is running, open the dampers slightly in rooms that are too warm and close the dampers in rooms that are too cool.

National Air Duct Cleaners Association (NADCA)

Figure 30-15. View of a clean duct system.

Thinking Green

Airflow Balance

To operate efficiently, an air conditioning system's airflow must be balanced. If a room has a supply duct but no return duct, then conditioned air must pass through part of a hallway or from one room to another on its way back to the air handler. In such rooms with no return air inlet, a small gap at the bottom of the door or another opening should be present to allow return airflow. System balance should be checked with the doors open and also with the doors closed.

Copyright Goodheart-Willcox Co., Inc.

Tjernlund Products, Inc.

Figure 30-16. A duct booster is selected for a specific duct size and volumetric flow rate.

30.2.5 Dirt on Walls and Drapes

Dirt can collect on walls, ceilings, and drapes in a conditioned space. In most cases, this dirt does not come from the ducts, but is already in the room. Room air movement (convection air current) is responsible for carrying dirt to the room surfaces.

The collection of dirt around warm-air grilles is called ***thermal precipitation***. Warm air exiting the grille picks up dirt from the room air. As this air hits cooler surfaces, the dirt settles (precipitates) on the surfaces. This precipitation takes place on windows also. The cooler the surface, the more dirt it collects. Therefore, insulation and storm sashes reduce the amount of dirt settling out of the air.

Studies have noted a relationship between the incidence of infection and the level of air contamination. Therefore, clean rooms are used for surgery and research. ***Clean rooms*** maintain an environment that limits the concentration of airborne particles. The temperature, humidity, and air quality are tightly controlled. Clean rooms are also used for the manufacture, repair, and service of critical items, such as instruments and computer components. Four methods of maintaining climate control are used in a clean room:

- Extremely high–efficiency filters.
- Laminar airflow (introducing supply air into the operating room at low uniform airflow, resulting in a stable downward flow of air).
- Anticontamination devices.
- Higher pressure in the clean room than outside the room.

30.2.6 Removing Odors

Vapors and odors frequently make up a large percentage of atmospheric air contaminants. Since most odors are gases, filters (even electronic ones) will not remove them. Some odors can be removed by cooling the gases to their condensation or freezing temperature. Some are removed by oxidation and by ultraviolet

Copyright Goodheart-Willcox Co., Inc.

light treatment. Others can be removed by combining them with other chemicals. The contaminants may be diluted with air or absorbed into a liquid. They may also be adsorbed into a solid. Both vapors and odors can be removed with activated charcoal or activated alumina with potassium permanganate.

30.3 Fan Service

If possible, belt tension should be on the lower belt section in order to provide more efficient belt drive. Belt tension is good when the belt can be pushed out of line a distance equal to belt width, **Figure 30-17**. Fan speed can be varied by using adjustable (variable pitch) pulleys, **Figure 30-18**.

All fans collect lint and dirt, which reduces the efficiency of the fan. Dirt should be removed every six months. Remove the fan and scrape, rub, or vacuum the dirt off the blades. Blades will collect dirt even more quickly if the fan bearings are oiled too much. The extra oil coats the fan blades and traps any dust that lands on the blades. Each bearing requires only one or two drops of oil each year. The bearings on direct-drive fans should also be checked and lubricated. See Chapter 17, *Servicing Electric Motors and Controls*, for more fan motor service information.

Thinking Green

Clean Fans

Most technicians recognize the need to keep heat transfer coils clean, but fans and fan motors should also be kept clean to maximize efficiency. Dirt buildup on a fan can reduce its ability to move air efficiently. Motors with dirt buildup operate at higher temperatures, which can lead to motor failure.

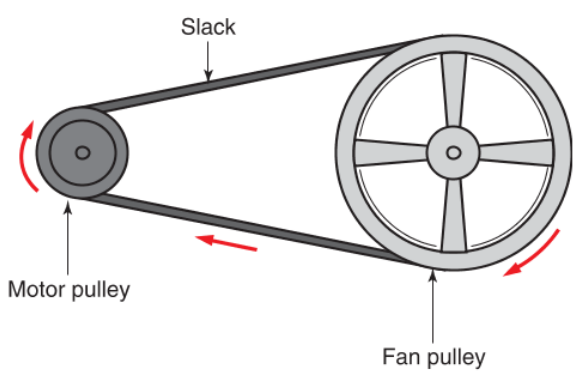

Goodheart-Willcox Publisher

Figure 30-17. Motor pulley and fan pulley. Note tension on lower part of belt and slack at upper. This is how a tensioned belt should look in operation.

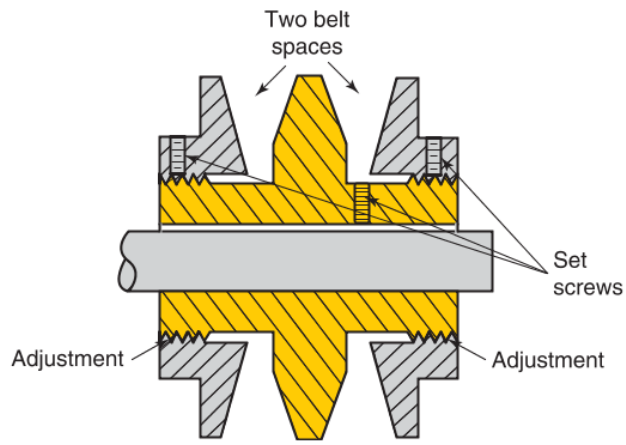

Goodheart-Willcox Publisher

Figure 30-18. Variable pitch pulley. Note the location of the setscrews. A pulley is used on a dual belt system and can provide fan variation of about 100 rpm through adjustment.

30.4 Filter Service

In order for heating and cooling systems to work efficiently, the correct rate of airflow must be produced by the ventilation system. Clogged air filters put excessive strain on the blower motor and can decrease airflow below acceptable levels. The following sections describe how to inspect and service various types of air filters.

30.4.1 Service of Disposable Filters

The most commonly used filters are disposable filters. See Chapter 28, *Air Quality*, for a description of the various types of disposable filters. Disposable filters should be replaced at least every three months or whenever they become inefficient or clogged. Clogged air filters produce too much pressure drop across the filter. Visual inspection is one way to determine if a filter needs replacement. Measuring pressure on both sides of the filter can also reveal whether the filter needs to be changed. The following are some guidelines for inspecting filters:

- Inspect the air filter for tears, holes, and excessive dirt. To determine how dirty the filter is, place a strong light on one side of the filter. Then, look through the filter from the other side. Replace any filter that is excessively dirty, punctured, or has damaged or deteriorating filter material.
- Use a manometer to check the pressure drop. Measure the pressure on each side of the filter. Subtract the smaller value from the larger. The difference represents the pressure drop through the filter. If the pressure drop across the filter is more than 25% of the pressure drop across the fan, the filter should be changed.

Copyright Goodheart-Willcox Co., Inc.

- Check the housing for signs of corrosion. If corrosion is present, clean the housing by sandblasting and repaint it.

Many air filters are unidirectional, which means they are effective only when air passes through them in the correct direction. Always replace filters so the arrows printed on the filter frame point in the direction of airflow. If this is not done, the filter will quickly load with dirt and clog.

30.4.2 Service of Electrostatic Filters

Electrostatic filters are often permanent, washable filters. These filters carry an electronic charge that attracts dust particles. However, many newer units combine the use of electronically charged plates as well as a replaceable media filter. The electronic cells on these units do not need to be cleaned. Only the media filter needs to be replaced. Review manufacturer literature for specific instructions.

30.4.3 Service of Electronic Air Cleaners

Electronic air cleaners (EACs) need service in the following situations:

- Trouble lights remain on.
- Strong ozone odor is detected.
- Rooms are dusty and dirty.
- Unit arcs constantly.

Before beginning service, ask the owner when the filter was last cleaned. Be sure the power doors or panels are closed and the power switch is on. Check the fuses. Check the meter readings or operating indicator.

Refer to the service manual for information about interpreting the meter readings or trouble light codes. Meters or trouble lights, when correctly interpreted, typically indicate whether the filter is dirty or wet or if an electrical problem is indicated.

If a problem is suspected, but the indicator lights or meters indicate that conditions are normal, follow the instructions in the manual to troubleshoot the unit.

If the filter is dirty, the building and air-handling system should be inspected. New carpeting, for example, may temporarily cause an overload on the filter. Leaking duct systems and untreated concrete floors all cause unusual high-load conditions. Dusty construction work in the vicinity may also overload the unit.

Electronic air cleaners should be cleaned on a planned schedule. Many companies now offer a free e-mail reminder system to remind homeowners to clean filters. Frequent washing of a unit is not harmful. However, a neglected unit will not clean air effectively.

Washing an Electronic Air Cleaner Filter

Refer to the owner's manual for specific cleaning instructions. The following is a general cleaning procedure.

1. Turn the electronic air cleaner, furnace, and blower power off.
2. Remove lint screens and ionizing collecting cells.
3. Clean the screens and cells using hot soapy water, and rinse thoroughly.
4. Replace lint screens and collecting cells after they have dried thoroughly.

Caution

Washing and Drying Collecting Cells

Do not run an electronic air cleaner without replacing the screens and cells. Some manufacturers recommend washing the collecting cells in a dishwasher. Do *not* allow the unit to run through the drying cycle. If the cells are not thoroughly dried, electrical arcing may occur when system is turned on. Also, running the cells through the dishwasher drying cycle may bake on any particles not removed during the wash. Air dry the collecting cells after any washing.

If the water used to wash collecting cells becomes black, you know the cleaner is removing contaminants from the air. A unit that is operating correctly allows only fine white dust to leave the ducts. The effectiveness of an electronic air cleaner can be checked by placing cheesecloth over a supply grille. If the cheesecloth becomes discolored after the cleaner has been in operation for two or three days, the electronic air cleaner is not working properly.

If a wet filter is indicated, check the electronic air cleaner for a "dry" switch. Some units are equipped with a switch that will automatically operate the blower to dry the filter. If the cleaner does not have a "dry" switch, use the thermostat to run the blower continuously or periodically to keep the filter dry. Inspect the system to determine why the filter is getting wet, and correct the problem if possible.

Electrical Service

Electronic air cleaners have an electrical circuit that converts 120 Vac to about 9000 Vdc. This circuit also has safety devices, such as door interlocks, and service devices, such as diagnostic circuits. Note the two step-up transformers, the door interlock, the rectifiers, and the neon light circuit in this electronic air cleaner's electrical circuit, **Figure 30-19**.

Copyright Goodheart-Willcox Co., Inc.

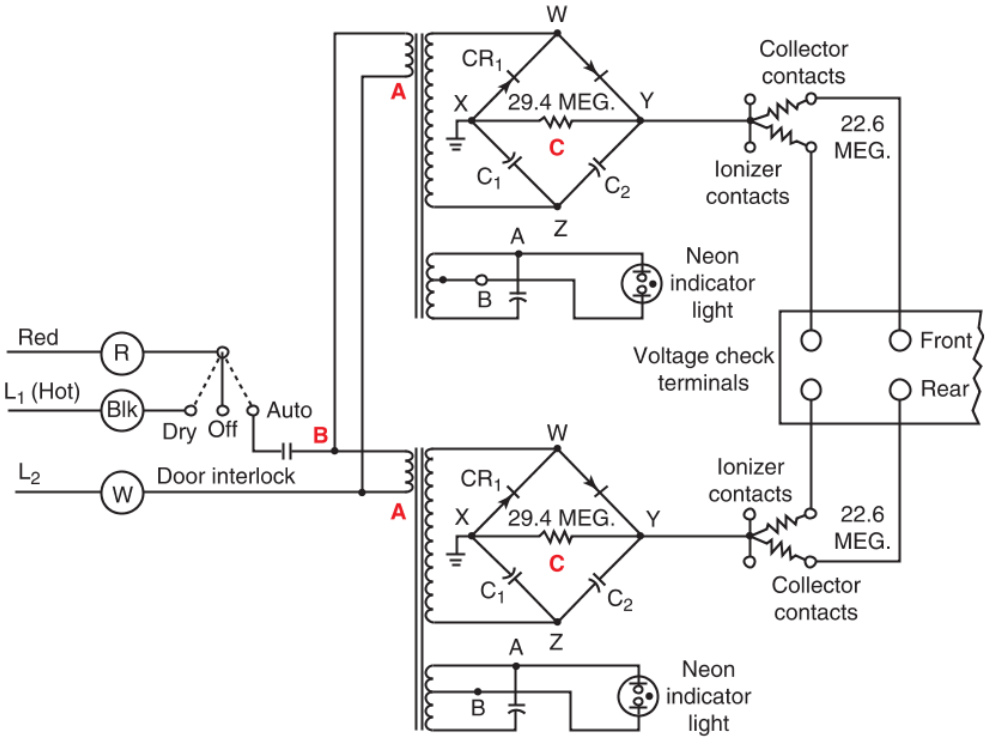

Honeywell Inc.

Figure 30-19. Wiring schematic for an electronic air cleaner.

Service to electronic air cleaners includes checking rectifiers and high dc voltage. Electrical troubles can occur in the power source circuit or in the high-voltage circuit. If the trouble is in the high-voltage circuit, the "power pack" capacitors and collecting cell ionizing wires should be inspected and electrically tested.

Safety Note

Servicing Electronic Air Cleaners

Electronic air cleaners should be serviced only by someone with special training on the model being serviced. Standard multimeters and leads are not designed to read the high voltages used in these air cleaners. A high-voltage probe must be used with a standard multimeter to read the voltage.

Recent developments in air cleaners allow technicians to check the status of an electronic air cleaner through the use of a performance indicator. The performance indicator informs the homeowner and technician of the status of the electronic air cleaner. The indicator should be located near the thermostat. The *On* reading confirms the electronic air cleaner is operating. The *Battery* reading prompts replacement of the performance indicator's battery, and *Service* indicates the prefilter and cells need cleaning. A *Fault* reading confirms there is extreme dirt loading, electronic malfunction, or other problems.

The collector section should be inspected visually for bent plates, plates out of position, dirt bridging the gap between ionizing wires and the plates, broken insulators, and broken wires. Plates must be straight. Broken insulators and ionizing wires should be removed and replaced. Cleaning the plates is essential.

Copyright Goodheart-Willcox Co., Inc.

Chapter Review

Summary

- Special instruments are needed to precisely measure the flow and pressure of air. The rate and pattern of airflow can be estimated by observing the movement of smoke from smoke generators, aspirators, smoke sticks, smoke guns, or smoke candles. Special instruments include flow hoods and air handler flowmeters.
- Blower door testing is used to determine the airtightness of a building's envelope and to locate air leaks. A blower door assembly consists of an adjustable door frame, a variable-speed fan, a manometer, airflow sensors, and related accessories.
- An air change occurs when the volume of air within a building is replaced with an equal volume of air. A blower door test determines the number of air changes per hour (ACH_{50}) when indoor pressure is held at –50 Pa WRT outdoors. This value is calculated based on the measured airflow through a blower door fan when indoor pressure is held at –50 Pa WRT outdoors (cfm_{50}). Building codes limit the maximum allowable number of ACH.
- Duct testing is performed by pressurizing a central HVAC system's ductwork with a duct blaster to a pressure of +25 Pa WRT the conditioned space. Duct airflow is then measured to determine leakage and locate the leaks. Building codes limit the maximum amount of duct leakage.
- Common problems encountered when working with duct systems include corrosion caused by dissimilar metals at joints, noise problems, drafts, dirty ductwork, and systems out of balance. If steel and aluminum ducts are joined, corrosion can be reduced by inserting a thin strip of zinc or magnesium between duct sections made of dissimilar metals.
- Noise problems are caused by something that is vibrating. The sound can travel a far distance from the source through the ductwork. In order to eliminate the problem, the source of the noise must be identified and conditions causing the unwanted vibration must be corrected.
- To alleviate drafts from registers, the louvers can be adjusted to direct airflow to an unoccupied space, a register can be replaced with one that diffuses air more broadly, or dampers in the duct run can be adjusted.
- A clean duct system increases the efficiency of the heating and cooling systems and reduces IAQ complaints. A variety of equipment is available for duct cleaning. Any duct vacuum that exhausts indoors must be HEPA filtered.
- An out-of-balance duct system can cause differences in temperature, humidity, and airflow from room to room. A duct system can be balanced by adjusting the dampers and registers so the proper airflow is provided to each room. If the problem is caused by excess friction in the ducts, a booster fan can be used to increase airflow.
- Fan belt tension must be properly adjusted and the fan blades must be clean in order for a fan to function efficiently. One or two drops of oil should be applied to the fan shaft every year.
- Excessively dirty or clogged air filters decrease the efficiency of the ventilation system and put an excessive strain on the blower motor. Disposable air filters can be visually inspected and should be replaced if they are damaged or dirty. The condition of an air filter can also be determined by measuring the pressure drop across the air filter.
- Most electronic air cleaners have self diagnostics that inform the technician if the filter is working properly, if the filter is dirty or wet, or if there is an electrical problem with the system.

Review Questions

Answer the following questions using the information in this chapter.

1. An instrument used to direct and calculate all of the airflow through a duct at a given supply or return is a(n) _____.
   A. air handler flowmeter
   B. barometer
   C. duct blaster
   D. flow hood
2. An instrument used to measure all airflow through a central HVAC system is a(n) _____.
   A. air handler flowmeter
   B. barometer
   C. duct blaster
   D. flow hood

Copyright Goodheart-Willcox Co., Inc.

3. Duct blasting involves _____.
   A. pressurizing the ducts
   B. measuring duct airflow
   C. sandblasting ductwork
   D. Both A and B.
4. When blower door testing, initials used to indicate the reference to which a pressure reading is being compared are _____.
   A. ACH
   B. cfm
   C. IAQ
   D. WRT
5. Aluminum-to-steel joints are _____.
   A. commonly used because they resist corrosion
   B. more enduring with a strip of zinc or magnesium between the metals
   C. the ideal ductwork joints
   D. *not* affected by electrochemical action between the metals
6. Rigid structures that transmit vibrations to places where the sound may be annoying are called noise _____.
   A. amplifiers
   B. carriers
   C. sources
   D. strengtheners
7. A high-pitched sound in an air distribution system is usually caused by _____.
   A. air velocity that is too high
   B. air velocity that is too low
   C. expansion of the duct as it warms up
   D. fan and motor sounds traveling along the duct system
8. If a high-pitched noise stops when a grille or diffuser is removed, the noise is caused by _____.
   A. air velocity that is too low
   B. sharp edges in the grille
   C. expansion of the duct as it warms up
   D. fan and motor sounds traveling along the duct system
9. A handheld HEPA vacuum is an example of a(n) _____ tool.
   A. access
   B. inspection
   C. cleaning
   D. None of the above.
10. A simple method of balancing airflow is to adjust the _____ until all rooms have the desired temperature.
    A. air filter
    B. blower fan speed
    C. dampers
    D. duct booster
11. Odors can be removed from indoor air by _____.
    A. combining them with other chemicals
    B. using activated charcoal to adsorb them
    C. oxidation and ultraviolet ray treatment
    D. All of the above.
12. Dirt on blower fan blades should be removed _____.
    A. every day
    B. every week
    C. every six months
    D. once a decade
13. The pressure drop across an air filter can be measured with a(n) _____.
    A. access tool
    B. barometer
    C. borescope
    D. manometer
14. When washing an electronic air cleaner filter, you should *not* _____.
    A. leave everything energized
    B. remove the lint screens and ionizing collecting cells
    C. turn the blower power off
    D. use hot soapy water
15. Electronic air cleaners need service when _____.
    A. trouble lights remain on
    B. rooms are dusty and dirty
    C. the unit arcs constantly
    D. All of the above.

Copyright Goodheart-Willcox Co., Inc.

CHAPTER 31 Ductless Air-Conditioning Systems

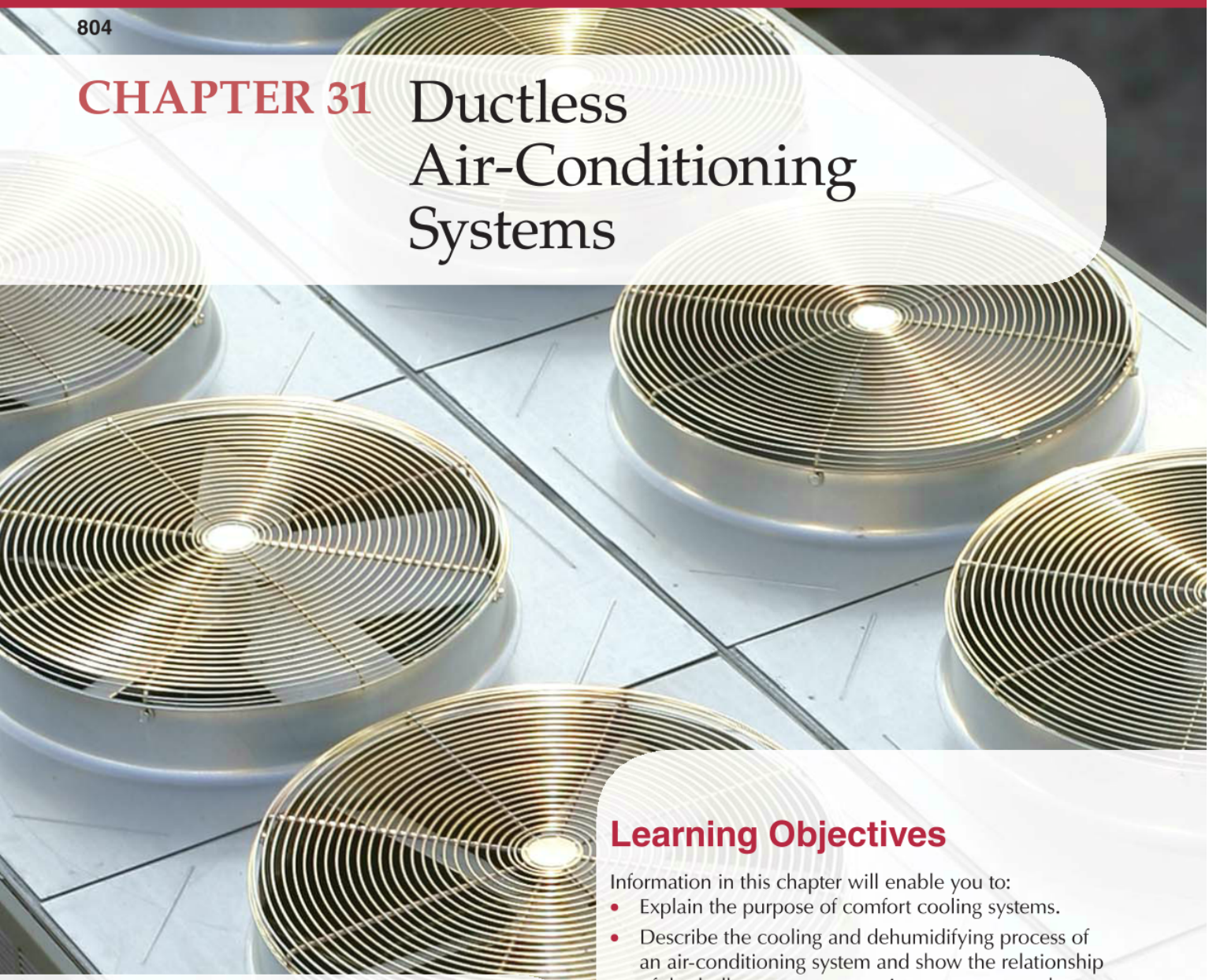

Learning Objectives

Information in this chapter will enable you to:

- Explain the purpose of comfort cooling systems.
- Describe the cooling and dehumidifying process of an air-conditioning system and show the relationship of dry-bulb temperature, moisture content, and relative humidity on a psychrometric chart.
- Summarize the characteristics of window and wall-mounted room air conditioners.
- Install and service window and wall-mounted room air conditioners.
- Discuss the operation and application of packaged terminal air conditioners and console air conditioners.
- Identify the characteristics and uses of portable air conditioners.
- Explain the operation, components, and arrangement of ductless split systems.
- Identify the features of multizone ductless split systems.
- Install and service ductless split systems.

Chapter Outline

31.1 Principles of Cooling and Humidity Control
31.2 Room Air Conditioners
31.2.1 Room Air Conditioner Features
31.2.2 Installing Room Air Conditioners
31.2.3 Servicing Room Air Conditioners
31.3 Packaged Terminal Air Conditioners
31.4 Console Air Conditioners
31.4.1 Installing Console Air Conditioners
31.4.2 Servicing Console Air Conditioners
31.5 Portable Air Conditioners
31.6 Multizone Ductless Split Systems
31.6.1 Ductless Split System Installation
31.6.2 Ductless Split System Service

Technical Terms

biocide tablet
comfort cooling system
console air conditioner
ductless split system
multizone ductless split system
overflow switch
packaged terminal air conditioner (PTAC)
packaged terminal heat pump (PTHP)
portable air conditioner
room air conditioner
self-contained air-conditioning system
split air-conditioning system
spot cool
variable refrigerant flow (VRF) system

Review of Key Concepts

Reviewing these concepts from earlier chapters will help you understand new concepts presented in this chapter:

- Relative humidity (rh) is a term used to express the amount of moisture in an air sample compared to the total amount of moisture the same sample would hold if it were completely saturated at the same temperature. (Chapter 27)
- The amount of moisture that air can hold depends on dry-bulb temperature. Warm air can hold more moisture than cold air. (Chapter 27)
- Only certain temperature and humidity ranges are comfortable to humans. Effective temperature is the combined effect of dry-bulb temperature, wet-bulb temperature, and air movement that provides an equal sensation of warmth or cold. (Chapter 27)

Introduction

Comfort cooling systems are systems that reduce the temperature and humidity in living and work spaces to a level comfortable for the occupants. Comfort cooling systems often use a mechanical refrigeration system to maintain the high-temperature refrigeration range (between 55°F to 90°F). The refrigerant evaporating temperature of most comfort cooling systems is 40°F to 50°F (4°C to 10°C). The information in this chapter is applicable to the most popular designs of ductless systems using mechanical refrigeration for cooling and dehumidifying.

Video

- Ductless AC Systems

31.1 Principles of Cooling and Humidity Control

As explained in Chapter 27, *Air Movement and Measurement*, only certain combinations of temperature and relative humidity are comfortable to humans. Certain industrial operations also rely on controlled temperature and humidity. For example, large industrial computer installations must operate in cool and dry conditions. Also, very specific conditions must be maintained where medicines and biological products are being produced. Industrial operations dealing with hygroscopic (water-absorbing) materials require strictly controlled humidity.

Figure 31-1 shows the operation of a typical cooling system. Return air is mixed with some fresh air. Then, this air mixture is filtered and passed over the evaporator, where it cools. As the air cools, some of the moisture in the air condenses on the evaporator coil and is drained away.

Cool air leaving the evaporator is at 100% relative humidity. However, remember the psychrometric charts from Chapter 27, *Air Movement and Measurement*. The lower the temperature of air, the less moisture it can hold. This explains the 100% relative humidity of the cool air. A set amount of moisture in a set volume of air can have high relative humidity at a low temperature and low relative humidity at a higher temperature, even though the amount of moisture the air contains has not changed at all, **Figure 31-2**.

As this cool, saturated air moves away from the evaporator and mixes with air in the conditioned space, it warms up and mixes with room air, lowering its relative humidity. With this influx of drier air, relative humidity in the space is brought down to a comfortable level.

In some cases, controlling relative humidity may be more important than temperature control. In these

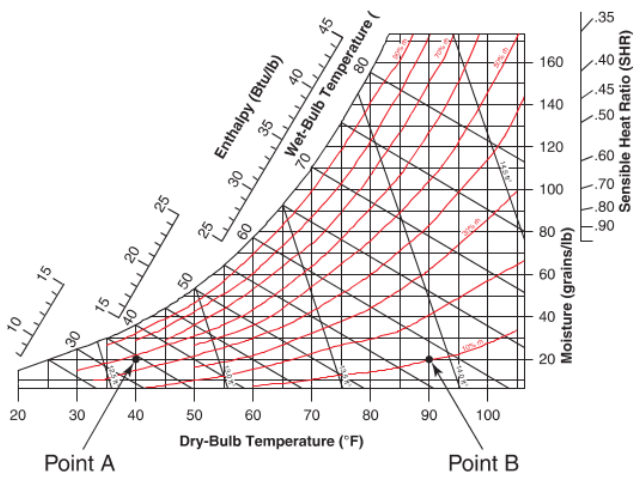

Goodheart-Willcox Publisher

Figure 31-2. In this example, a set volume of air has 20 grains/lb of moisture. At 40°F dry-bulb temperature, it is at 60% relative humidity. When dry-bulb temperature rises to 90°F, it is at 10% relative humidity, even though this air still contains the same amount of moisture (20 grains/lb).

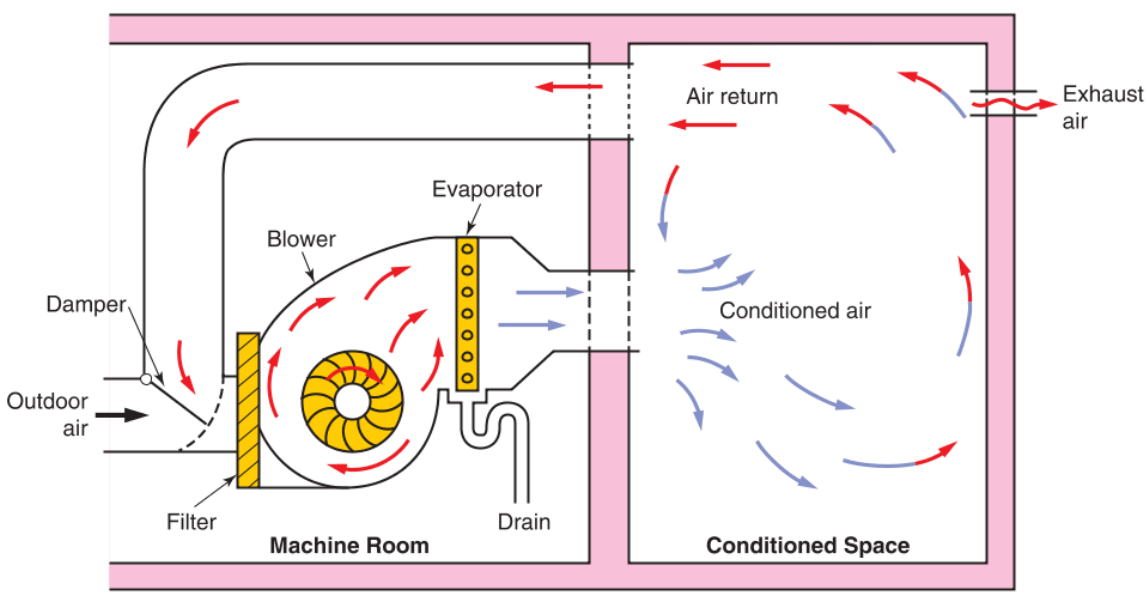

Goodheart-Willcox Publisher

Figure 31-1. Basic operation of an air conditioner that cools, recirculates, and removes moisture from outdoor air. The air is moved with a centrifugal blower.

Copyright Goodheart-Willcox Co., Inc.

designs, some of the return air bypasses the evaporator and is fed into the air conditioner outlet. The bypass warms the cooled air before it leaves the duct system. This allows the system to provide dehumidification without overcooling the conditioned space. The amount of return air bypassed around the evaporator is controlled by a damper. This type of system is shown in **Figure 31-3**.

In a cooling cycle, the dry-bulb (db) temperature of the air is lowered. When this happens, like the shift from Point A to B in **Figure 31-4**, the level of relative humidity increases. This is due to colder air being able to contain less moisture than warmer air. The air contains the same amount of moisture, but the amount it can hold is reduced. When air's dry-bulb temperature reaches dew point (100% relative humidity), some moisture can condense and be removed. In comfort cooling, reducing humidity makes the air more comfortable. Moisture can be removed by either of two methods:

- Dehydrate the air with chemicals.
- Cooling air until moisture condenses.

When the dry-bulb temperature in **Figure 31-4** is reduced to about 77°F, its relative humidity is at 100% (Point C). Moisture is effectively removed from air by condensing on a cool surface. This is represented by the curve from Point C to Point D. Look along the right side of the chart to see the vertical distance from C to D along the Moisture scale. This shows the drop in moisture content in grains per pound. The psychrometric chart shows an approximate reduction from 143 grains/lb down to 42 grains/lb of moisture.

Reheating the air (horizontal line from Point D to Point E) decreases the air's relative humidity. However, in most systems the cooled air leaving at Point D is mixed with the room air. Since the return air is at

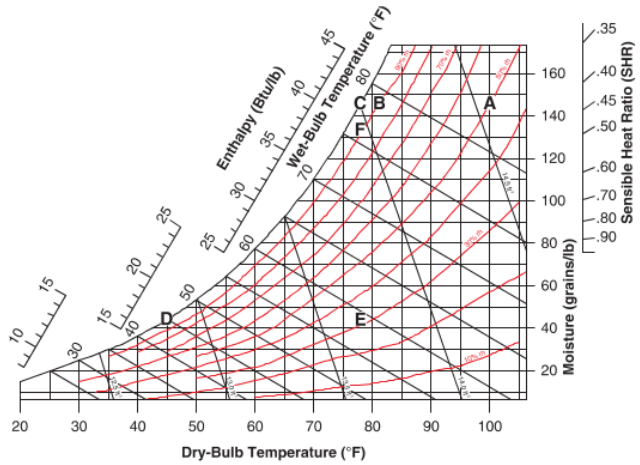

Goodheart-Willcox Publisher

Figure 31-4. Cooling cycle on a psychrometric chart. A—Condition of room air. B—Partly cooled air. C—Air cooled to saturation (100% relative humidity). D—Air cooled to remove some moisture. E—Rise in temperature of cooled air mixed with room air. F—Rise in relative humidity of cooled air mixed with room air.

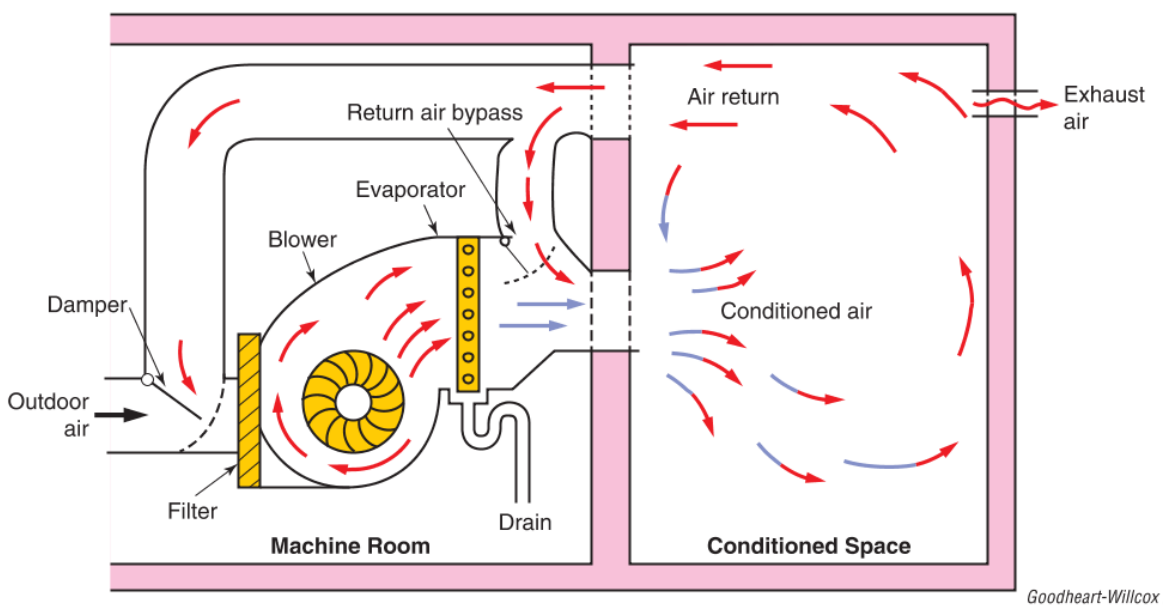

Goodheart-Willcox Publisher

Figure 31-3. Comfort cooling system with a return air bypass for relative humidity control. The air passing through the evaporator is cooled and dehumidified. However, because the air leaving the evaporator is mixed with relatively warm, dry return air, the cooling capacity of the system is reduced. This allows the system to continue running to dehumidify the air without overcooling the conditioned space.

Copyright Goodheart-Willcox Co., Inc.

45°F (Point D) and the room air is 100°F (Point A), the dry-bulb temperature of this mixture will increase to about 78°F. Not only will temperature change, but relative humidity will change. The result of the mixture of return air and room air will result in a relative humidity of 90%. This is reduction of temperature by 12°F and of moisture content by about 10 grains/lb of moisture. Relative humidity is higher, but moisture content and temperature are lower.

Several types of comfort cooling systems can be used to provide cooling and humidity control. Of ductless systems, these systems may be self-contained (packaged) or split. A ***self-contained air-conditioning system*** is a comfort cooling system with all parts and controls in a single cabinet. An example is a room air conditioner. Within its cabinet is the metering device, compressor, condenser, evaporator, controls, and necessary accessories. A packaged terminal air conditioner (PTAC) is another example of a self-contained air-conditioning system.

All self-contained air-conditioning units provide cooling during the hot season. Some models can also provide heating during the cold season. Both types have a complete refrigeration system, including compressor, condenser, refrigerant controls, evaporator, filters, and related parts. Individual room thermostats provide temperature control.

Unlike self-contained air-conditioning systems, a ***split air-conditioning system*** divides its components into two or more separate locations. A split system's condensing unit may be placed outdoors and its evaporating unit may be placed indoors. In comfort cooling, both central air-conditioning systems and ductless systems may be either packaged or split.

31.2 Room Air Conditioners

A ***room air conditioner*** is an inexpensive and simple self-contained air-conditioning system that provides cooling to a portion of a building or residence. Most room air conditioners are installed in a window opening, and installation is relatively easy. Window units are available that fit double-hung or casement windows. Other room air conditioners, called *through-the-wall room air conditioners*, are designed to be installed in a standard size wall opening. See **Figure 31-5**.

A basic room air conditioner cools, filters, and recirculates air through a replaceable filter. High-pressure vapor refrigerant condenses in the condenser. It flows from the liquid line, through the metering device, and into the evaporator. Most room air conditioners use a capillary tube, a bypass AXV, or a TXV as its metering device. When the air conditioner is in operation, the evaporator is under low pressure. The liquid refrigerant rapidly boils and picks up heat from the evaporator surface. A motor-driven evaporator fan draws air from inside the room and pulls it through a filter. The fan forces the air over the evaporator. Air flowing over the evaporator is cooled. The cooled air is blown back into the room. The arrows in **Figure 31-6** show the airflow pattern.

As room air is blown across the evaporator coil, moisture from the air condenses on the evaporator's surface. This moisture then drains to a drip pan. In some units, the drip pan is drained to the outside. In other units, moisture from the evaporator flows into a pan in the compressor compartment. As the moisture evaporates, it helps to cool the compressor and condenser.

A

B

Joseph McCullar/Shutterstock.com; MaxyM/Shutterstock.com

Figure 31-5. Room air conditioners can be mounted in a window or through a wall. A—A window-mounted room air conditioner has extendable partitions that seal the gaps between the air-conditioner case and the sides of the window casing. B—Through-the-wall room air conditioners are designed to fit in a standard size opening in the side of a building.

Copyright Goodheart-Willcox Co., Inc.

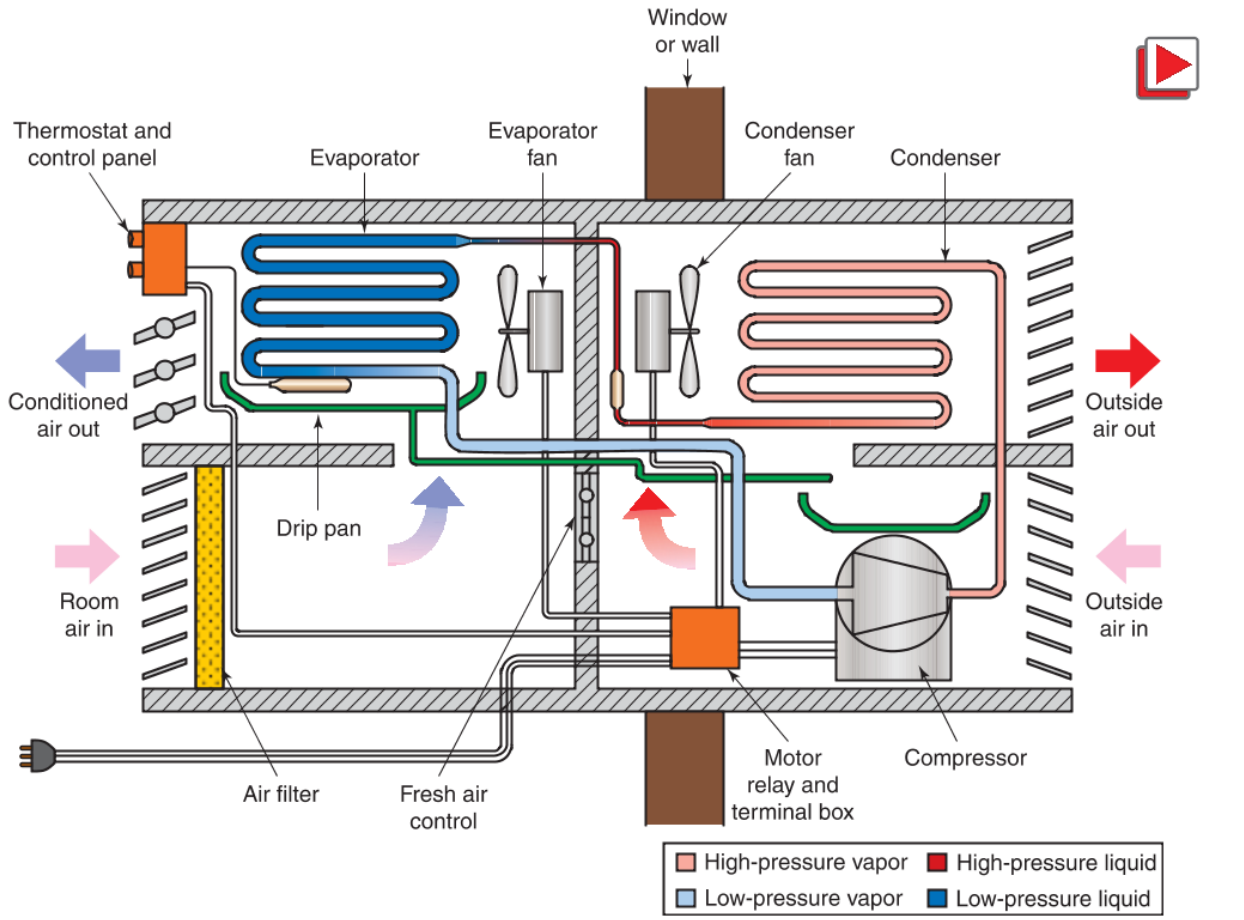

Goodheart-Willcox Publisher

Figure 31-6. This diagram shows airflow, refrigerant flow, and pressure conditions in a basic window or through-the-wall room air conditioner. Note that the conditioned airflow and the condenser airflow are completely separated from each other.

Low-pressure refrigerant vapor is drawn from the evaporator through the suction line back into the compressor. Compressed to high-side pressure, the vapor is then forced into the condenser. The compressor and condenser are in the part of the unit outside the building. The compressor compartment fan draws in outdoor air, circulates it over the condenser, and discharges it outside. The refrigerant in the condenser is cooled and condensed to a liquid, and the cycle begins again.

Pro Tip

Evaporator and Compressor Compartment Fans

The evaporator and compressor compartment fans may be driven by the same motor, or each may have its own motor. Check manufacturer literature for fan and motor arrangements.

Room air conditioners contain a built-in thermostat to operate the unit. A thermostat's sensing bulb is usually mounted at the inlet of the evaporator. A temperature differential of 5°F (3°C) between the evaporator inlet and duct exhaust is normal. If the part of the bulb farthest from the evaporator is insulated, the bulb will respond better to evaporator temperatures. It will cool sooner and stop the unit before it overcools. It will also stop the unit if the evaporator ices up. The unit will be prevented from starting again until the ice melts.

Caution

Restarting a Room Air Conditioner

As with all capillary tube refrigeration systems, if the unit is shut off and then immediately restarted, it may stall or fail to cycle on. The compressors in systems that use a capillary tube as a metering device are designed to cycle on under a certain high-side pressure. Immediately restarting such a system does not allow high-side pressure enough time to equalize with the low-side pressure. Allow enough time for the system to equalize after shut down to prevent compressor damage.

Copyright Goodheart-Willcox Co., Inc.

As noted in the preceding section, a room air conditioner usually consists of a compressor, condenser, evaporator, refrigerant control, and motor controls. In some models, electric heating elements are included for cold weather use. During cold weather, the refrigeration system is turned off and the electric heating elements are activated. The evaporator fan is turned on. The same fan is used to circulate warm air in cold weather and cooled air in warm weather. The user can select the desired temperature to maintain using the control panel on the front of the unit, **Figure 31-7**.

31.2.1 Room Air Conditioner Features

Some room air conditioners are equipped with handheld, infrared, remote controls. On some remote controls, indicator lights identify the operating mode and temperature setting currently selected. The user can use the handheld remote control to operate the system from any place that has a clear line of sight to the air conditioner. Most remote controls allow the user to program the clock, select the operating mode, change the fan speed, adjust the temperature setting, and set start and stop times.

Some basic room air conditioners are equipped with a fresh air intake to bring in outside air to mix with the recirculated indoor air. Another variation has an auxiliary electrical resistance heating unit to furnish heat. Another variation is self-contained heat pump, which is capable of providing both comfort cooling and heating simply by reversing the flow of refrigerant through the refrigeration system.

Some room air conditioners are designed so the conditioned air stream oscillates side-to-side as the unit runs. This helps distribute the conditioned air throughout the room. The oscillation is created by rotating angled deflector plates inside the conditioned air passage. The plates are mounted on a shaft. The shaft is turned by a turbine in the air passage, **Figure 31-8**.

31.2.2 Installing Room Air Conditioners

Window air conditioners are installed into a window opening using metal plates, rubber gaskets,

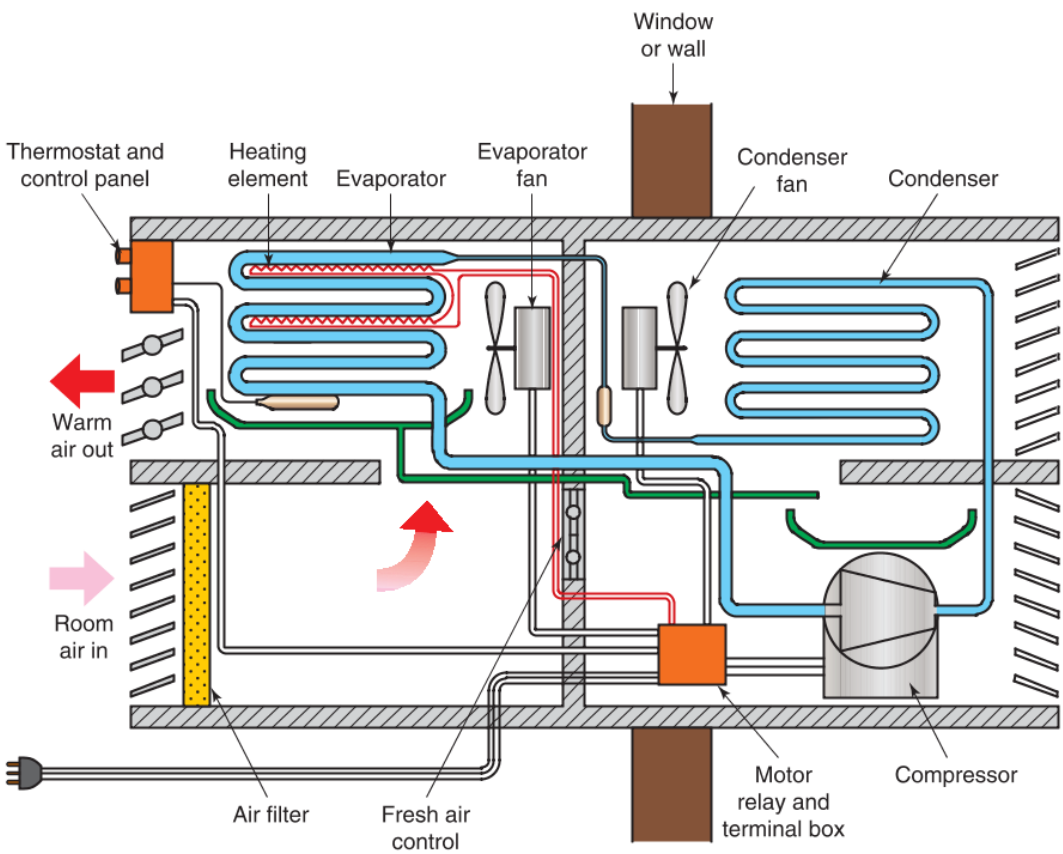

Goodheart-Willcox Publisher

Figure 31-7. Some room air conditioners have electric heating elements that provide heat during cold weather. Notice that the refrigeration system is shut down and high-side and low-side pressures equalize when the heating elements are energized.

Copyright Goodheart-Willcox Co., Inc.

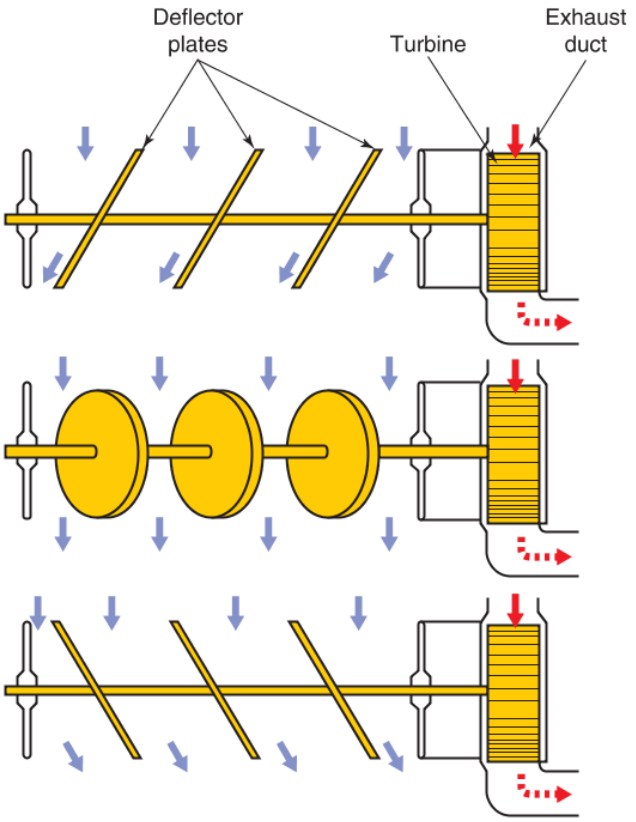

Goodheart-Willcox Publisher

Figure 31-8. The operation of an oscillating grille deflector is shown here. A shaft connects a turbine in the exhaust passage to a series of angled deflector plates in the conditioned air passage. As the turbine spins, the deflector plates wobble around their centers. The wobbling deflector plates cause the conditioned air stream to oscillate left and right as it exits. One half of a rotation is shown here.

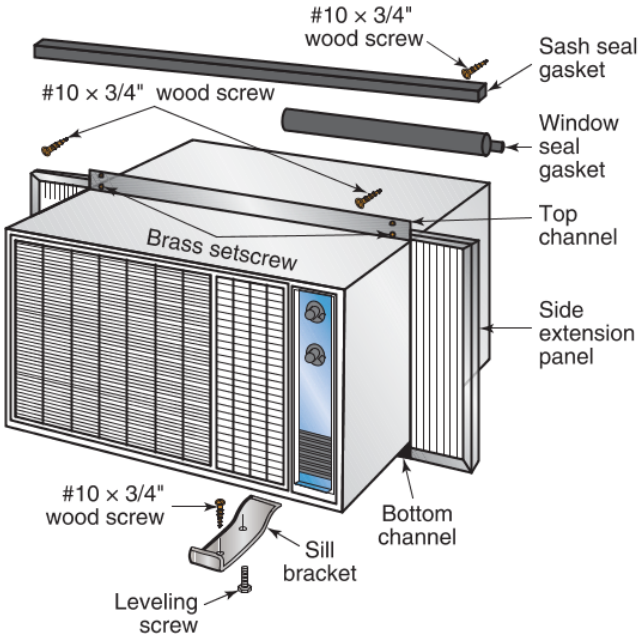

Goodheart-Willcox Publisher

Figure 31-9. Drawing showing a window air conditioner and the parts needed to mount it safely and seal the gaps in the window opening.

and sealing compounds. The condensing side of the unit must be tilted down slightly so the condensate can drain outside the building. A window air conditioner and the parts needed to install it are shown in **Figure 31-9**.

The unit must be securely fastened in place to prevent it from falling out of the window. The window itself must be secured in the proper position. A bracket on the outside of the building can provide support for the condensing side of a window air conditioner, **Figure 31-10**.

Room air conditioner manufacturers provide different methods of mounting. **Figure 31-11** shows a windowsill with a leveling bracket and security bracket mounted. Another method of bracing and leveling a window air conditioner is shown in **Figure 31-12**.

Manufacturers each have slightly different methods for mounting window units, however, most are similar. The first step in installing a window air conditioner is to install the sleeve provided with the air conditioner into the window opening. The air conditioner chassis will slide right into the sleeve after it is installed. The sleeve is the outer shell of the air conditioner, and the chassis consists of a frame to which all of the functional parts of the air conditioner are mounted.

The air-conditioner sleeve should be adjusted to tilt downward about 1/4″ on the outside. This will tilt

RectorSeal

Figure 31-10. A mounting bracket supporting a window air conditioner.

Copyright Goodheart-Willcox Co., Inc.

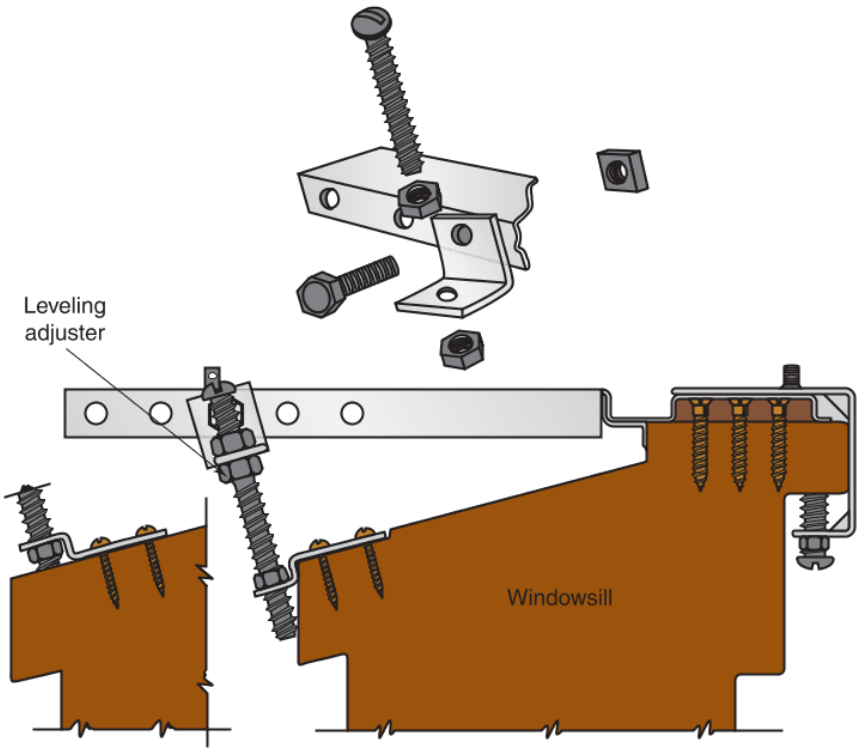

Goodheart-Willcox Publisher

Figure 31-11. Bracing is used to hold a window air conditioner on the windowsill.

the air conditioner enough to provide proper condensate drainage. A sponge rubber or plastic strip is usually placed between the air conditioner housing and the windowsill to help make a leakproof joint. The sill brackets and housing are screwed into the windowsill. Then, the rubber seal strips and the filler boards are put in place, **Figure 31-13**.

When the lower sash is raised to make room for the air conditioner, an air gap is created between the two sashes. This opening can be sealed with a sponge rubber or foam strip. The strips can be notched to fit the space. Sealing the air gap this way prevents heat leakage into the conditioned space, improving the efficiency and effectiveness of the air conditioner, **Figure 31-14**.

The air-conditioner chassis is heavy. It should be moved on a dolly or special carrier. Avoid using the tubing or coils as hand grips for moving or lifting the chassis. Carry the unit by holding onto the bottom pan.

Do not force the air-conditioner chassis into the sleeve. As the chassis slides into the sleeve, make sure the refrigerant lines and wiring are free and clear. When the chassis is in place inside the housing, install the front grille, filter, and control knobs. As a final step, check the installation for tightness. Check all seams to see if light is showing through and seal any that are found using foam strips or, where appropriate, caulk. All edges around the window and air conditioner should be sealed to minimize air infiltration.

A room air conditioner should be equipped with a grounded (three-prong) electrical cord. Plug the air conditioner into a separate, dedicated electrical circuit. Check the unit nameplate for appropriate electrical information. A suitable electrical circuit is necessary.

Air conditioners that mount through the wall are popular in apartments. They can be left in place year round and do not prevent the windows from being opened and closed. Typically, an insulated cover is placed over this type of air conditioner during the heating season. **Figure 31-15** shows a typical through-the-wall air conditioner installation.

31.2.3 Servicing Room Air Conditioners

Servicing room air conditioners (window, through-the-wall, and packaged terminal) is similar to servicing small domestic refrigeration systems, like refrigerators and freezers. The diagnosis and service of domestic refrigeration systems were explained in Chapter 25, *Installation and Troubleshooting of Domestic Refrigerators and Freezers*, and Chapter 26, *Service and Repair of Domestic Refrigerators and Freezers*. Some of the

Copyright Goodheart-Willcox Co., Inc.

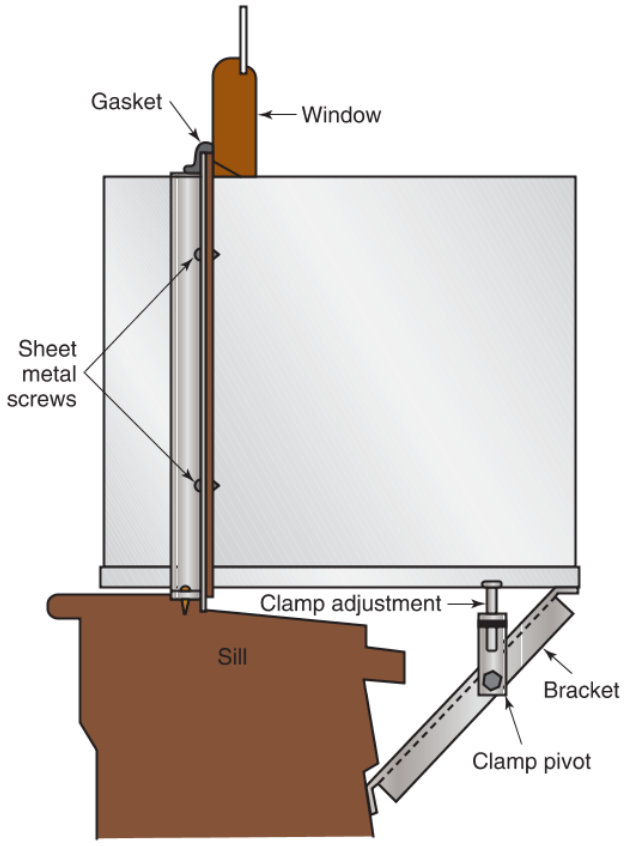

Goodheart-Willcox Publisher

Figure 31-12. Window air conditioner with indoor flush mounting. The sheet metal screws hold the side closure panels.

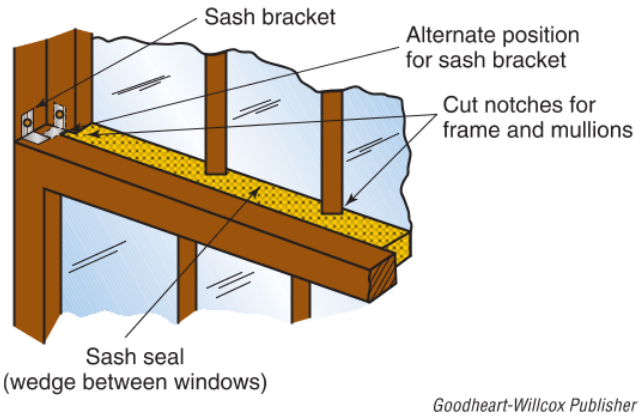

Goodheart-Willcox Publisher

Figure 31-14. A sponge rubber seal placed between the upper edge of the lower sash and the upper sash of a double-hung window prevents heat leakage. A sash bracket keeps the lower sash locked in position.

external service operations specifically intended for room air conditioners are described in the following paragraphs.

On a semiannual basis, the air filter should be inspected and either cleaned or replaced. This task is usually performed by the owner. **Figure 31-16** shows a typical filter design for a room air conditioner.

Every year, thoroughly clean the evaporator, condenser, fan blades, fan motor, compressor, and housing. To prepare the unit for service, the chassis should be removed from its housing or sleeve.

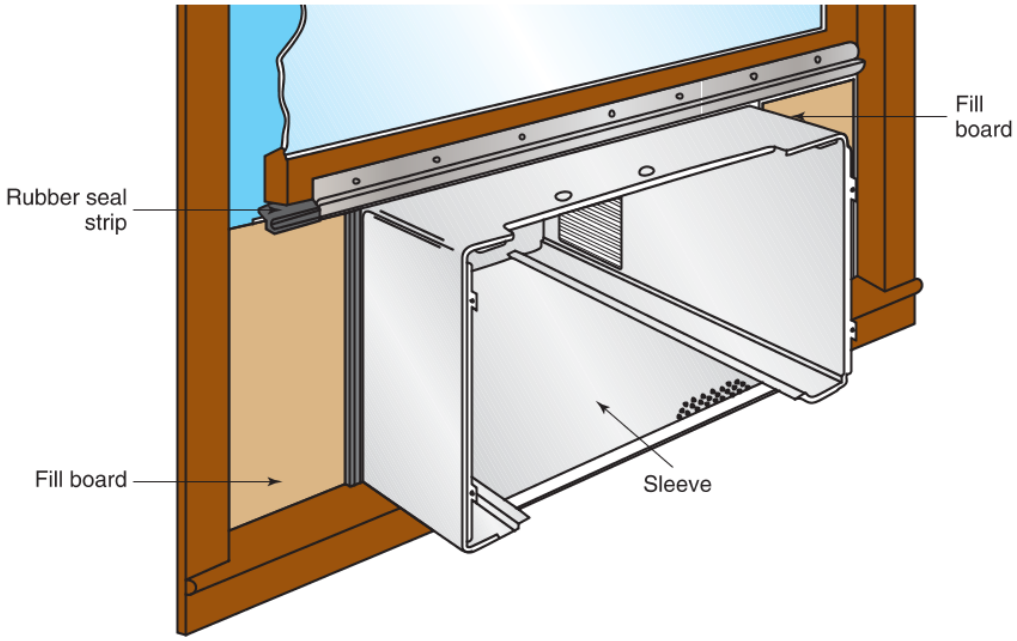

Goodheart-Willcox Publisher

Figure 31-13. Window air conditioner housing installed, showing rubber seal strips and filler boards.

Copyright Goodheart-Willcox Co., Inc.

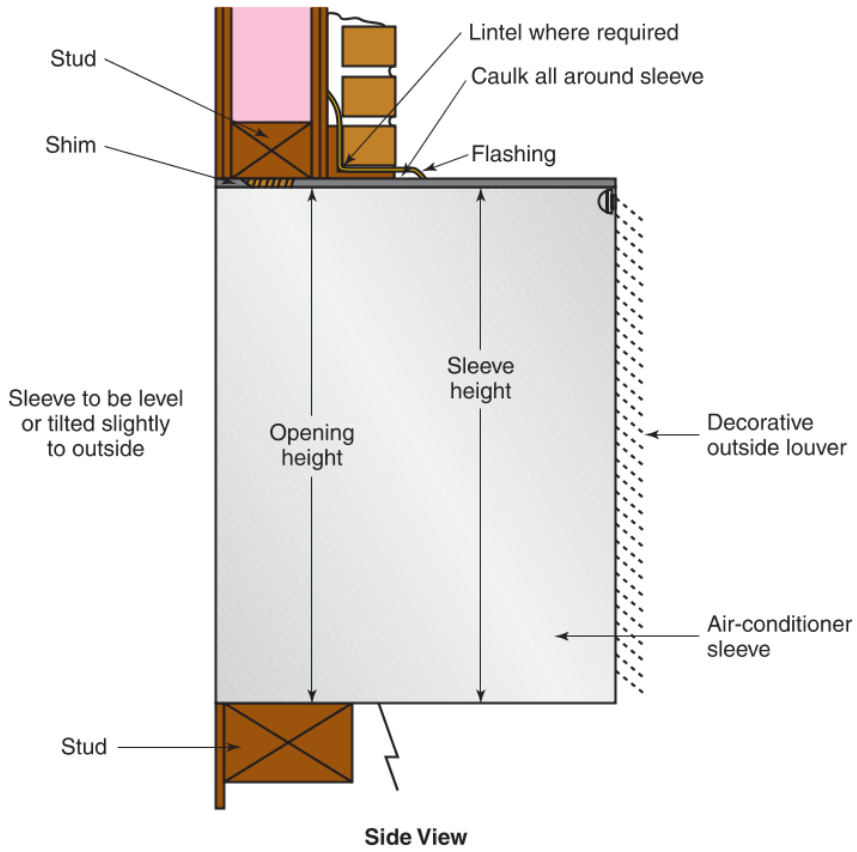

Goodheart-Willcox Publisher

Figure 31-15. Typical through-the-wall room air conditioner installation.

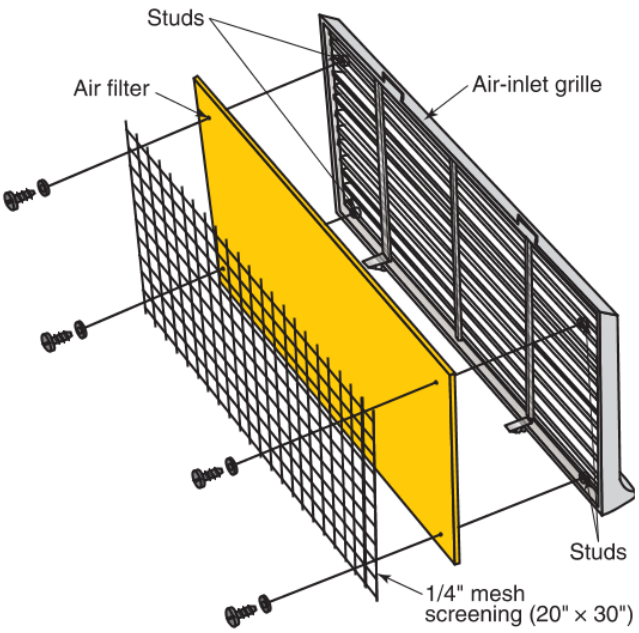

Goodheart-Willcox Publisher

Figure 31-16. Typical air filter installation for room air conditioner.

Before removing the air-conditioner chassis from its housing, place a tarp or newspapers on the floor to catch any dust or dirt that falls. Remove the chassis carefully, and carry it to a designated area for service. If possible, clean the air conditioner outdoors. This reduces the chance of creating a mess and increases the number of cleaning methods that can be used.

Remove or tie back curtains or drapes, and then use a commercial vacuum cleaner with a brush nozzle to clean the inside of the air-conditioner housing. After the housing is clean, move on to the chassis. Finned evaporators and condensers are difficult to clean. The fin spacing prevents the vacuum brush from reaching the lint and dirt. In such cases, use plastic blades and a powerful vacuum to remove most of the dirt. Any dirt on the evaporator or condenser reduces their ability to transfer heat, reducing the effectiveness of the unit. Never use metal blades for cleaning; they can poke through the coil tubing, causing leaks. If the air conditioner is being cleaned outdoors, a powerful water and detergent spray can be used to clean the coils. Clean the coils as thoroughly as possible and straighten any bent fins on the coils.

Copyright Goodheart-Willcox Co., Inc.

While the air-conditioner chassis is out of its housing for cleaning, inspect the fan motor or motors and lubricate them (unless they have sealed bearings). Always wipe away excess oil. Oil residue on the fan blades will collect lint and reduce the fan's ability to move air. When servicing fan motors, make certain that fans are tight on the shaft. They should be carefully positioned in the shroud for efficient air movement. Avoid bending or twisting the fan blades. An off-balance fan will be noisy because of vibration and will quickly wear out the motor bearings. Replace damaged fans.

Inspect the condensate drain. It must be clean and free of any blockage. Remove lint from the drain hole and tube using a soft wire. Check all bolts, nuts, and screws for tightness. Before reinstalling the air-conditioner chassis into the housing, run the air conditioner to check for noise. If an unusual noise is heard, find its source and correct the problem. Always put a cloth over the air conditioner's conditioned air outlet when it is first started after cleaning. Any loosened dirt not removed by the vacuum cleaner will be blown out of the adjustable grille when the air conditioner starts up for the first time.

The wiring of a window air conditioner is very similar to the wiring of other refrigeration units. See **Figure 31-17**. External electrical service procedures are

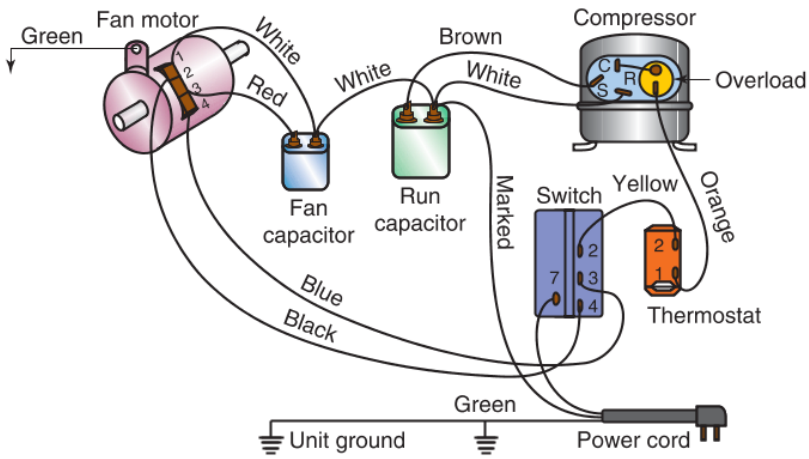

Switch position	Contacts		
	2	3	4
Off	O	O	O
Normal fan	O	C	O
Super fan	O	O	C
Normal cool	C	C	O
Super cool	C	O	C
C – closed O – open			

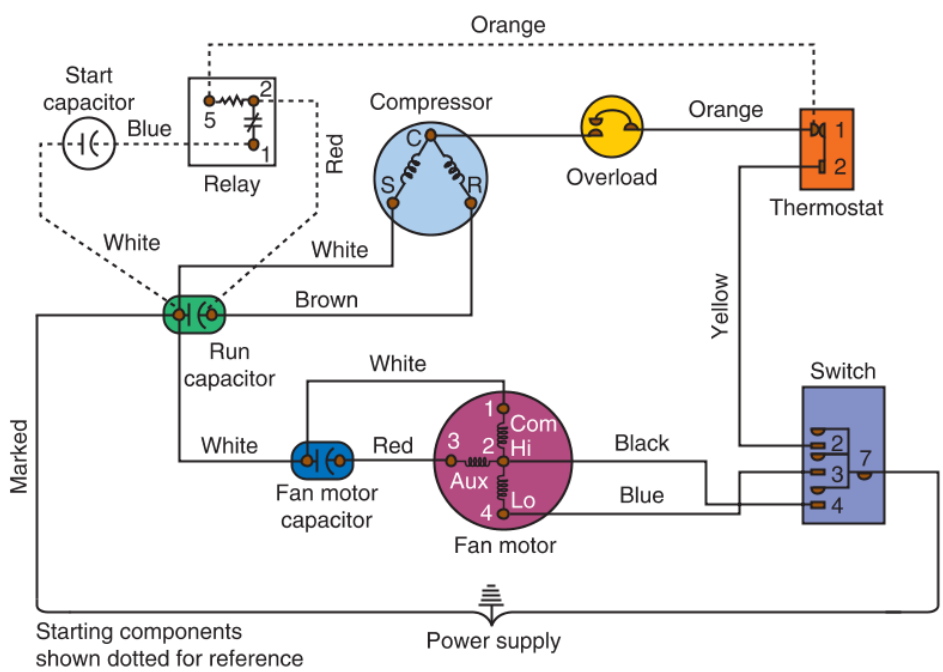

Fedders North America, Inc.

Figure 31-17. Wiring diagram of 120 V window air conditioner with 7000 Btu/hr capacity. Note two-speed fan motor and fan capacitor.

Copyright Goodheart-Willcox Co., Inc.

usually the same as those for domestic refrigeration systems, with the following exceptions:

- Fan motors usually have two or three speeds.
- Some systems have three capacitors: a start capacitor, a run capacitor, and a fan motor capacitor.

A unit with a start capacitor and a run capacitor is shown in **Figure 31-18**. An arrangement with three capacitors is shown in **Figure 31-19**. In this example, the run capacitor and the fan motor capacitor are located together in a single case.

Figure 31-20 shows a wiring diagram for a window air conditioner equipped with a three-speed fan motor. The system operates on a 240 V circuit and has a 21,000 Btu/hr (6.15 kW) capacity.

The procedures for testing electrical components is similar to those for servicing small domestic refrigeration systems. Fan and compressor motor testing is described in Chapter 17, *Servicing Electric Motors and Controls*. Before doing internal service work, make sure the malfunction is not in the external circuit. Test for power. Check the thermostat, the relay, the capacitors, and the overload protectors (both electrical and temperature).

Most window air conditioners are equipped with a thermostat. These thermostats are typically adjustable to cut out between 56°F (13°C) and 60°F (16°C).

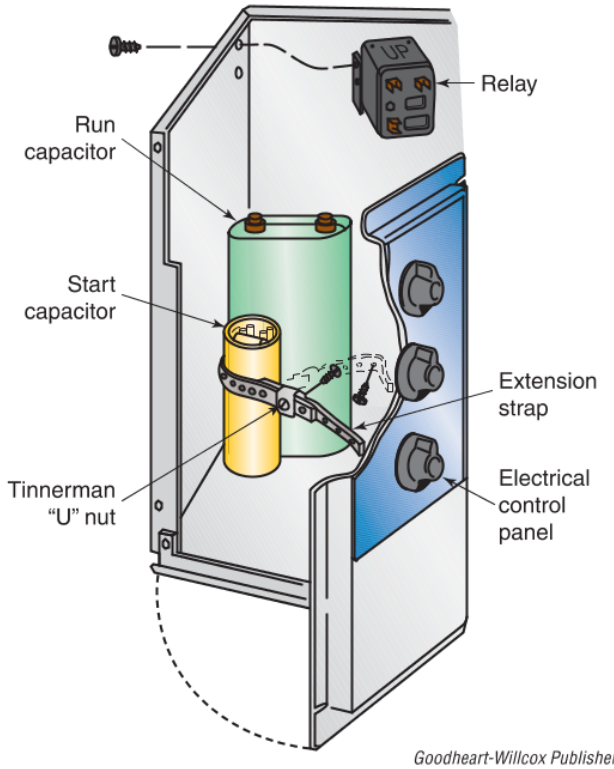

Goodheart-Willcox Publisher

Figure 31-18. Locations of parts (such as the capacitors, the control panel, and the relay) in a typical window air conditioner.

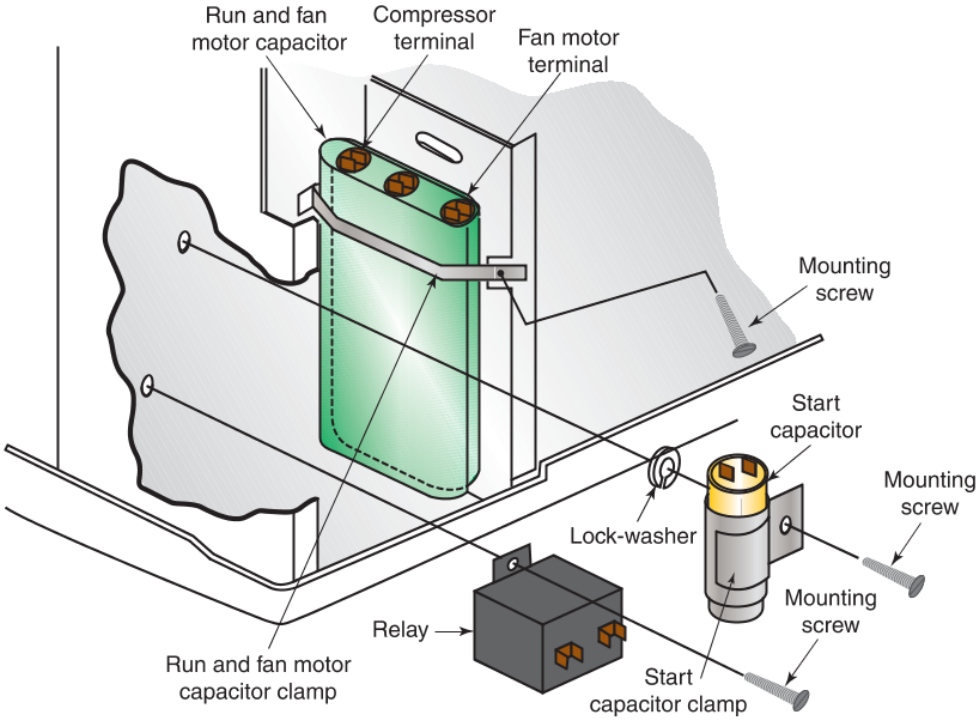

Goodheart-Willcox Publisher

Figure 31-19. Arrangement of start, run, and fan motor capacitors. Note that fan motor capacitor and compressor capacitor are in the same container.

Copyright Goodheart-Willcox Co., Inc.

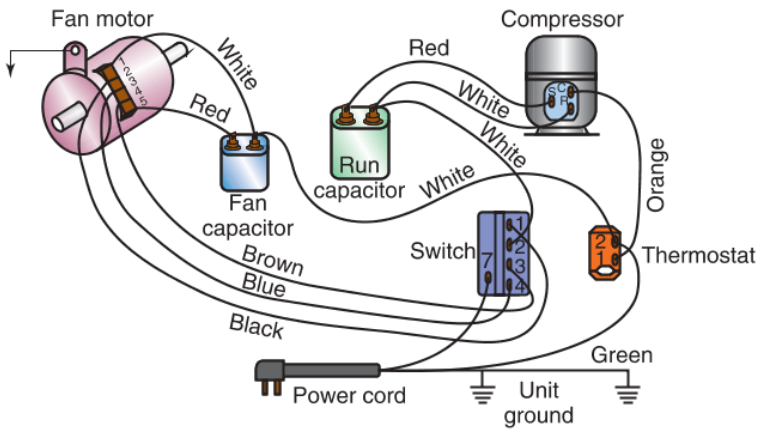

Switch position	Contacts			
	1	2	3	4
Off	O	O	O	O
Fan	O	O	O	C
Low cool	O	C	C	O
Normal cool	O	C	O	C
Super cool	C	C	O	O
C = closed O = open				

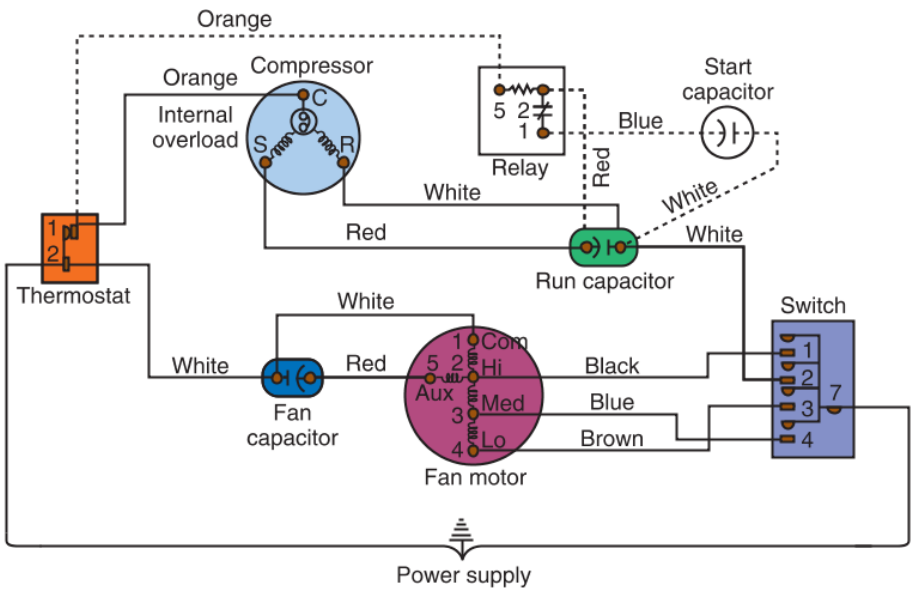

Fedders North America, Inc.

Figure 31-20. Wiring diagram of three-speed fan system.

The cut-in adjustment is typically between 77°F (25°C) and 80°F (27°C). Their differentials vary between 3°F (2°C) and 8°F (4°C). If a thermostat fails, the unit will not start. To test the operation of a thermostat, cover the air outlet and air inlet with a cloth. This will cause the air inside the unit to recirculate, which will quickly drop the air temperature to the cut-out temperature. Use a thermometer to monitor the air temperature so it can be compared to the desired cut-out temperature.

Other troubles inside a room air conditioner can include the following:

- Lack of refrigerant.
- Stuck compressor.
- Inefficient compressor.
- Clogged refrigerant circuit.
- Short circuit, open circuit, or grounded motor windings.

The motor condition can be checked with a test light or ohmmeter. To check for lack of refrigerant or clogged refrigerant lines, install a gauge manifold. If the system is not equipped with service valves, it may be necessary to install piercing valves on the suction line and discharge or liquid line before attaching a gauge manifold, **Figure 31-21**.

If the system lacks refrigerant, locate the leak and repair it before recharging the system. If the compressor is bad, it can be replaced on the owner's premises, or the unit can be taken to a shop for repair.

Copyright Goodheart-Willcox Co., Inc.

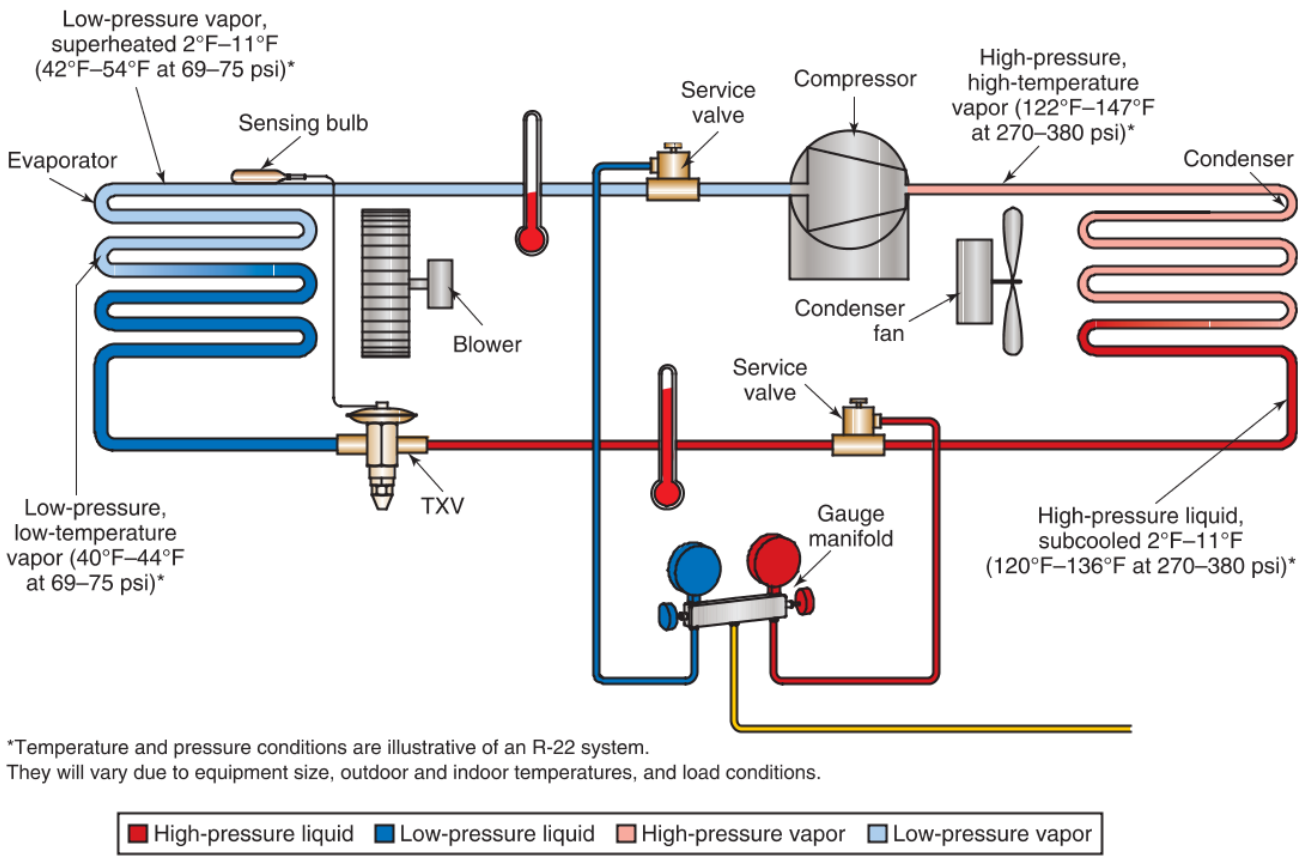

Goodman Manufacturing Company

Figure 31-21. Air conditioning unit cycle diagram showing gauge manifold installed.

Many window air conditioners use PSC (permanent split capacitor) compressor motors. These motors do not use a relay for starting and will have difficulty starting if the supplied voltage is low (10% or more). Many service technicians install a start capacitor and a relay to overcome this problem. The capacitor and the relay must be the correct size for the motor. The best way to determine the correct size is to follow the manufacturer's recommendation. If this is not available, the table in **Figure 31-22** will help in selecting the correct start capacitor.

A start capacitor circuit must include a relay that opens the circuit when the compressor reaches a satisfactory speed. Special start capacitors are available for compressors with PSC motors. See **Figure 31-23**.

Replacement capillary tubes for room air conditioners are selected by size. **Figure 31-24** gives the correct sizes for replacement capillary tubes in systems charged with R-22 and those systems charged with R-410A refrigerants.

Window air conditioners are often removed during the winter season. However, if this is inconvenient,

Recommended Ratings for Add-On Start Capacitors for PSC Compressor Motors

Run Capacitor (Microfarads)	Add-On Start Capacitor (Microfarads)
20	18
25	18 or 25
30	25
35	25
40	25 or 45
45	45
50	45

*Most manufacturers specify a microfarad rating of a start capacitor for each of their units. Follow the manufacturer's specifications.

Goodheart-Willcox Publisher

Figure 31-22. Table of start capacitor sizes to be used on PSC (permanent split capacitor) motor compressors to correct hard starts.

Copyright Goodheart-Willcox Co., Inc.

Sealed Unit Parts Co., Inc.

Figure 31-23. Hard start capacitor designed for use with permanent split capacitor motors. This type of capacitor increases torque to the compressor during startup.

Capillary Tube Sizes				
HP	R-410A		R-22	
	Inside Diameter	Length	Inside Diameter	Length
1/8	0.28″	81″	0.28″	58″
1/6	0.28″	78″	0.28″	86″
1/5	0.31″	41″	0.31″	28″
1/4	0.31″	101″	0.31″	72″
1/3	0.40″	62″	0.40″	43″
1/2	0.52″	42″	0.52″	109″
3/4	0.52″	34″	0.64″	87″
1	0.64″	94″	0.64″	65″

Goodheart-Willcox Publisher

Figure 31-24. Capillary tube sizes for room air conditioners that use R-410A and R-22. Note diameter and length of capillary tube depend on system size and capacity.

the unit can be winterized. The air inlet and the outlet grilles can be blocked with cardboard or flexible plastic sheeting. A storm sash can be custom built to fit around the air conditioner. Plywood held in place with caulking or rubber grommets can also be used. Check the manufacturer's service manual for proper winterization of the unit.

If the window unit drips water into the room, it is not correctly installed. Check the slope of the unit from inside to outside with a level. It must slope to the outside (condenser edge) about 1/4″. Condensate water will then run to a depression in the housing under the condenser fan and condenser. Make sure the drain hole is open, and then level the unit along its other dimension. Finally, recheck the unit installation for airtight sealing in the window opening.

31.3 Packaged Terminal Air Conditioners (PTACs)

A ***packaged terminal air conditioner (PTAC)*** is the type of self-contained, ductless air-conditioning system commonly used in hotels and apartment buildings. PTACs are installed in an exterior wall of a building. When a PTAC is installed, the condensing side of the unit is positioned outside the building wall, and the evaporator side of the unit is positioned inside. Often, PTACs provide heating and cooling, though some may only be designed for cooling. PTACs are designed to condition air in an individual room or zoned part of a building. They are frequently used in hotel rooms, apartments, dormitories, shops, offices, banks, and restaurants. See **Figure 31-25**.

Many PTACs are designed to fit through a standard 42″ × 16″ wall space. While they provide cooling using standard mechanical refrigeration, they provide heat using one of the following methods:

- Electric resistance heater.
- Operating as a heat pump.
- Operating as a heat pump with electric resistance heater.
- Gas-fired heater.

Electric resistance heat PTACs use electric resistance heaters mounted in the air distribution section of the unit. Usually, these units require 240-volt wiring to efficiently operate the electric resistance heaters. More information about electric resistance heating is presented in Chapter 43, *Electric Heating Systems*. **Figure 31-26** shows an exploded view of a packaged terminal air conditioner with an electrical resistance heater.

A ***packaged terminal heat pump (PTHP)*** can reverse its refrigeration cycle in order to produce heat.

Copyright Goodheart-Willcox Co., Inc.

McQuay International

Figure 31-25. Packaged terminal air conditioners (PTACs) usually contain both heating and cooling systems. PTACs are frequently used to provide year-round comfort in offices and apartments.

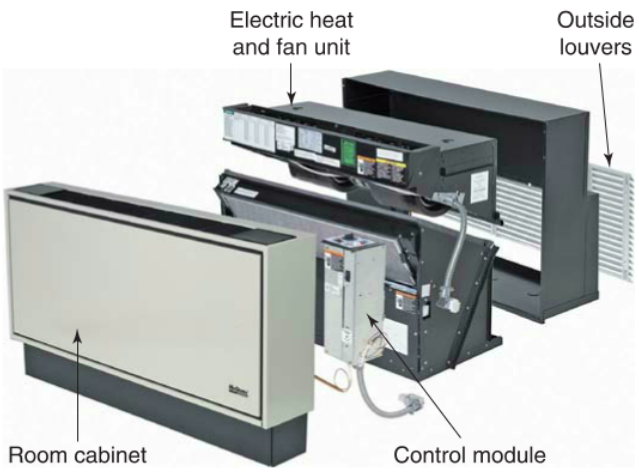

McQuay International

Figure 31-26. This PTAC uses electrical resistance heaters to provide heat.

In the heating mode, a four-way reversing valve changes the pathways to the suction line and liquid line, reversing the flow of refrigerant through the system. While the compressor still operates as it does during the cooling cycle, the reversing valve causes the compressor to draw in low-pressure vapor from the outdoor refrigerant coil, and it causes the compressor to send high-pressure refrigerant into the indoor refrigerant coil. More information about heat pump operation is presented in Chapter 40, *Heat Pumps*.

Thinking Green

Heat Pump vs. Electric Heat

Heat pumps produce heat up to three times more efficiently than electric resistance heating. In all but the coldest of regions, a packaged terminal heat pump will significantly reduce energy consumption compared to a packaged terminal air conditioner equipped with electric resistance heat.

Packaged terminal heat pumps are generally suitable for geographical regions where temperatures do not typically drop below freezing. The control can be set for the desired temperature, and the unit automatically selects heating or cooling mode based on measured air temperature.

In cold climates, a packaged terminal heat pump may not be able to provide sufficient heat while running a reverse cycle. The packaged terminal heat pump is then assisted by electric resistance heaters. Packaged terminal heat pumps with auxiliary resistance heaters can provide heat in any climate conditions, but they operate more efficiently when the temperature is above 35°F (2°C).

Another type of PTAC is equipped with gas-fired heater that uses electronic ignition and either LP or natural gas supplied to the system. The heater section of the PTAC is completely sealed off from the inside living space. It draws in outside air for combustion and exhausts the products of combustion to the outside as well. The heat of combustion is transferred indoors through a heat exchanger, which keeps the indoor air completely separate from the combustion air. One drawback of a gas-fired heater is that it requires a gas line to be run to the unit. More information about gas-fired heating is presented in Chapter 41, *Gas-Fired Heating Systems*.

Return air enters a PTAC through a lower grille. Conditioned air is discharged through the upper grilles, **Figure 31-27**. Some PTACs simply recirculate indoor air while others have adjustable fresh air intakes and evaporator bypass controls. PTACs often must have drains to remove the condensate flowing from the evaporator.

All types of packaged terminal air conditioners use hermetic compressors, which can be rotary, scroll, or reciprocating. Their refrigerant controls are typically capillary tubes or thermostatic expansion valves. PTACs are normally charged with R-134a or R-410A.

Copyright Goodheart-Willcox Co., Inc.

A PTAC's airflow system includes a blower fan for the evaporator and another fan for the condenser. Typically, the entire PTAC will slide out of its wall cabinet for easy service. Basic user controls include a heating and cooling thermostat and rotary switches for selecting heating or cooling operations and fan settings.

31.4 Console Air Conditioners

A ***console air conditioner*** is an entire air-conditioning system mounted in a stand-up cabinet. These systems are also commonly referred to as *vertical packaged terminal air conditioners*. They vary in capacity from 1/2 ton to 4 ton. Such units are often used in small commercial establishments such as restaurants, stores, and banks, **Figure 31-28**.

Ducts can be connected to deliver conditioned air to areas with poor air circulation, such as partitioned spaces within a room. The condensing unit is mounted in one section of the console; the air blower and evaporator are in another section of the cabinet. Some console units simply recirculate indoor air, while others have adjustable fresh air intakes and evaporator bypass controls, **Figure 31-29**.

All console units must have drains to remove the condensate flowing from the evaporator. Console units typically use a hermetic compressor. The refrigerant control is usually a thermostatic expansion valve. Most have air-cooled condensers.

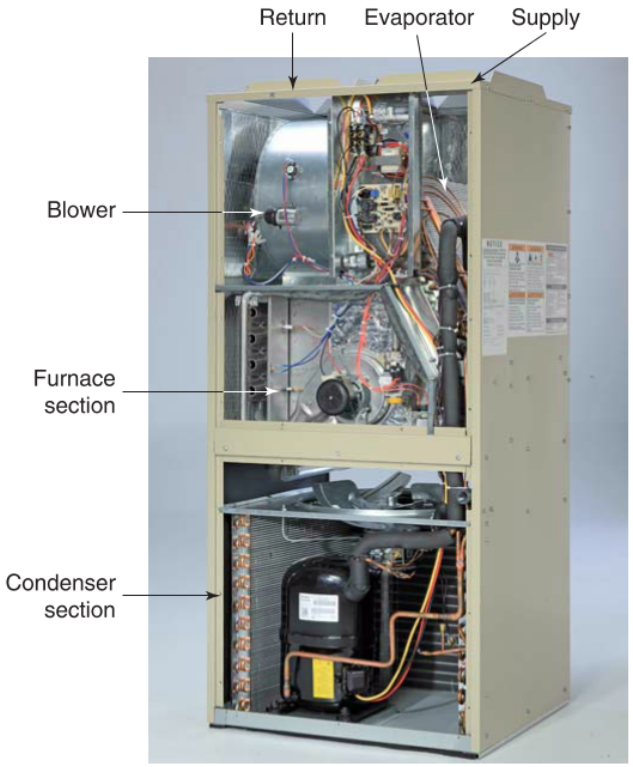

Suburban Manufacturing

Figure 31-28. Console air conditioner with an air-cooled condenser and gas-fired heater. The system can be used to cool or heat a single space, or ducts can be added to provide air conditioning to multiple spaces.

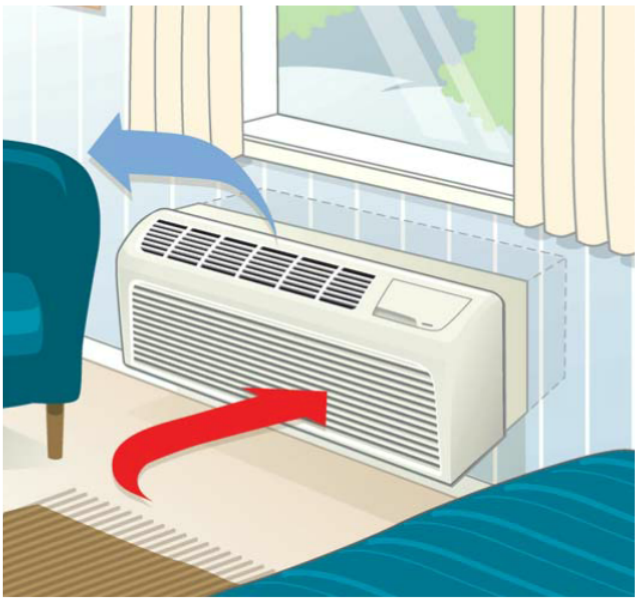

Goodman Manufacturing Company

Figure 31-27. Indoor airflow through a PTAC.

31.4.1 Installing Console Air Conditioners

Console units are factory-assembled. After placing and leveling the unit, any necessary plumbing and electrical connections are made. Such connections must conform to local codes. Unit operation should be thoroughly checked after installation, including air temperature (both inlet and outlet), electrical load, and operating pressures. The data should be recorded for future reference and saved with the service company and also with the console owner.

31.4.2 Servicing Console Air Conditioners

When internal parts of a console air conditioner must be serviced, panels must be removed from the cabinet to gain access. Periodic maintenance that must be performed on console air conditioners includes the following:

- Replacing or cleaning the air filter.
- Cleaning the evaporator coil and fins.

Copyright Goodheart-Willcox Co., Inc.

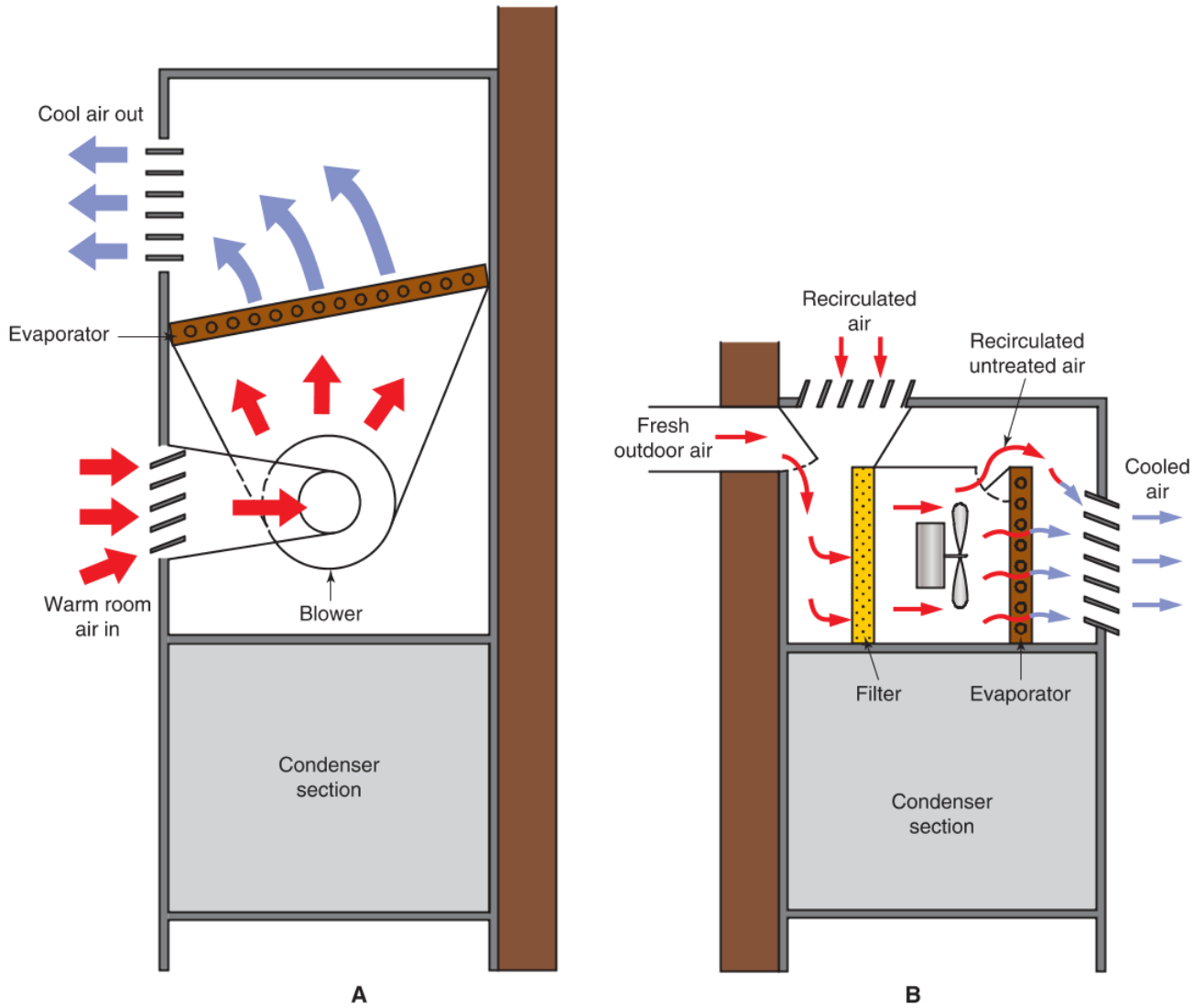

Goodheart-Willcox Publisher

Figure 31-29. Air circulation through two different console air conditioners. A—This console air conditioner can only recirculate indoor air. B—This console air conditioner has controls and corresponding dampers for mixing outdoor air with recirculated air and for allowing a portion of filtered, recirculated air to bypass the evaporator.

- Cleaning the fan motors and oiling it (unless it has sealed bearings).
- Cleaning the drain pan and drain tube.

The inner lining of the cabinet sometimes gathers lint. Any lint or other debris inside the cabinet should be vacuumed out regularly. Service of most console air conditioners is similar to service of room air conditioners, residential air-conditioning systems, and some light commercial air-conditioning systems. Check the refrigerant charge, return and supply air temperature, low-side and high-side pressure, the operation of the metering device, and the amperage draw of the compressor.

A regular maintenance schedule is necessary to ensure long and satisfactory service from any air-conditioning system. Different parts of the system must be checked more frequently than others. A record should be kept of all checks including both the data and the date it was acquired. The following are maintenance and inspection procedures that should be performed on a regular schedule.

Weekly:

- Check the condition and tension of any V belts.
- Check fans for proper operation and speeds.
- Check all remote or secondary units.

Copyright Goodheart-Willcox Co., Inc.

- Check for water leaks and repair as needed.
- Check controls (pressure, temperature, and airflow).
- Lubricate the system as specified. Check the compressor oil level if sight glass is available.
- Check canvas connectors on ducts for damage and repair or replace as needed.

Monthly:

- Check the refrigeration system (check for leaks or oil spots).
- Check the air filters and clean or replace as needed.
- Check the humidifier for proper operation and scale buildup.
- Check the safety valves.
- Check the duct dampers, registers, and diffusers.
- Check the piping for proper insulation, excessive vibration, and wear.

Every six months:

- Clean fans and cabinet.
- Clean duct registers and diffusers.

Every year:

- Check the efficiency of the compressors.
- Check damper operation.
- Clean water circuits (where applicable).
- Operate all hand valves.

Every two years:

- Inspect the condenser's wet surfaces (where applicable).

31.5 Portable Air Conditioners

Portable air conditioners are used to ***spot cool*** (cool a specific, limited area) without the expense of installing a traditional cooling system. ***Portable air conditioners*** are self-contained. The evaporator, compressor, condenser, and refrigerant control are packaged together in one case, which is often equipped with wheels so the unit can be rolled where it is needed. Portable air conditioners are designed for continuous operation and can provide non-stop cooling if needed, **Figure 31-30**.

Portable air conditioners are used extensively in commercial environments, such as hospitals, office buildings, computer and server rooms, and institutional environments to cool people and equipment. Because of their compact design, they can be easily relocated to provide conditioned air wherever needed.

Units use ducts to direct warm condenser air away from the cooled area. Depending on the unit's design and the types of adapters used, the warm air can be vented out of a window, into a drop ceiling with a large common air space, or into an adjacent room. See **Figure 31-31**.

Haier America

Figure 31-30. A portable air conditioner using a window to access air for condenser cooling.

In some designs, the cooled evaporator air exits through a grille in the top front of the case. In other designs, the cooled air is directed through one or more

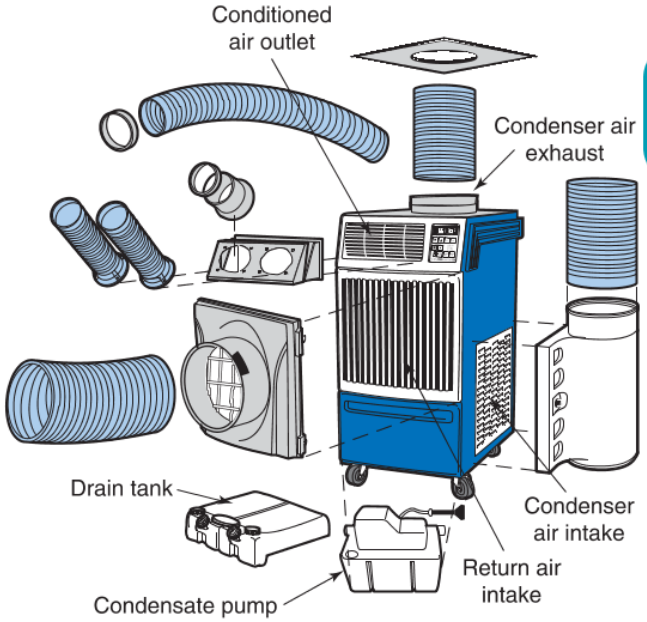

DENSO Sales California, Inc.

Figure 31-31. The accessory ducts and adapters available for a typical portable air conditioner.

Copyright Goodheart-Willcox Co., Inc.

ducts or nozzles at the top front of the unit. Return air for the condenser and evaporator can be drawn through grilles in the case or can be drawn in from a remote location through ducts.

As a portable air conditioner cools the air, it also lowers the humidity of the air, **Figure 31-32**. Condensation is collected in a drain tank built into the unit. The condensation can be gravity drained or a pump can be attached to pump the condensate to a higher elevation so it can be drained out of a window or into a sink. Some advanced designs evaporate the condensate using the warm air blown over the condenser. This vaporized condensate then flows with the condenser cooling air into an unconditioned area. In these designs, since most of the condensate is removed from the unit with the hot exhaust air, the tank can be drained less often.

Uses for portable air conditioners include the following:

- Primary cooling. When people are exposed to hot operations such as welding, brazing, or oven curing, spot cooling improves safety and productivity. Portable air conditioning can speed up manufacturing processes by cooling materials that are too hot to handle or package.

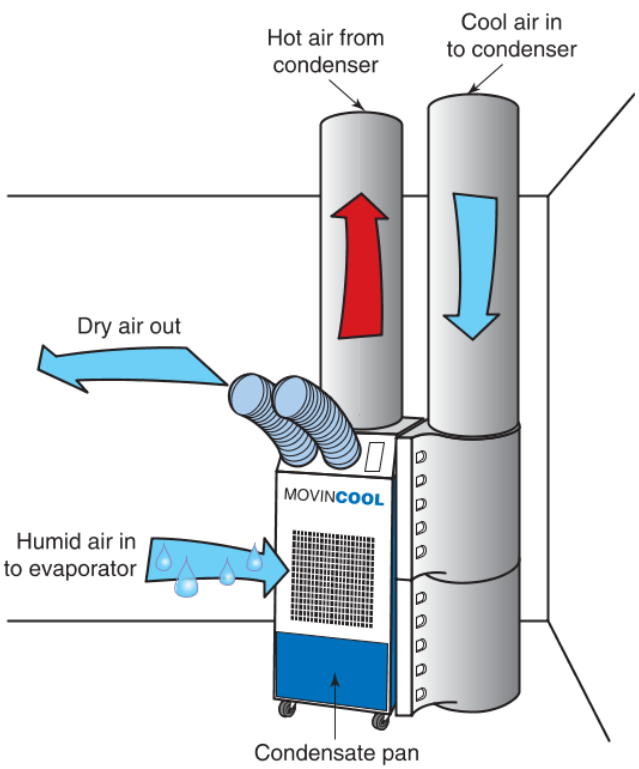

DENSO Sales California, Inc.

Figure 31-32. Humid rooms or those damaged by flooding can be cooled and dehumidified with portable air conditioners.

- Supplementary cooling. When a central system is not sufficient, portable air conditioning protects electronic, computer, and telecommunications equipment against excessive heat buildup, **Figure 31-33**.
- Emergency cooling. When the central air-conditioning system fails or is down for maintenance, portable air conditioners can provide cooling in critical spaces.

Portable air conditioners have wheels and can be manually moved to the site. Most portable air conditioners have less than 5 tons of capacity.

Mobile air-conditioning units are similar to portable air conditioners but are larger and have greater cooling capacity. Mobile air-conditioning units are mounted to a trailer or skid and placed outdoors with heavy equipment. They are generally 5 tons or larger and can be used to cool an entire office building in an emergency.

Another type of spot cooling uses a ceiling-mounted air-conditioning unit. It is located between a drop ceiling and a building's roof. These installations are less involved than a traditional ductless system and more permanent than portable air conditioners. There are no refrigerant lines that need to be installed or brazed. A ceiling-mounted system requires only a little wiring and short runs of ducts. Warm air is drawn into the unit, cooled, and returned. Heat absorbed from the conditioned air is expelled into the unconditioned air above the drop ceiling or is directed outside through ducts, **Figure 31-34**.

Some companies specialize in renting portable air-conditioning equipment to meet the emergency cooling needs of their customers. For example, if the

DENSO Sales California, Inc.

Figure 31-33. Rooms containing a company's servers and other telecommunication devices can produce more heat than a building's HVAC equipment can handle. Portable air conditioners are a convenient solution.

Copyright Goodheart-Willcox Co., Inc.

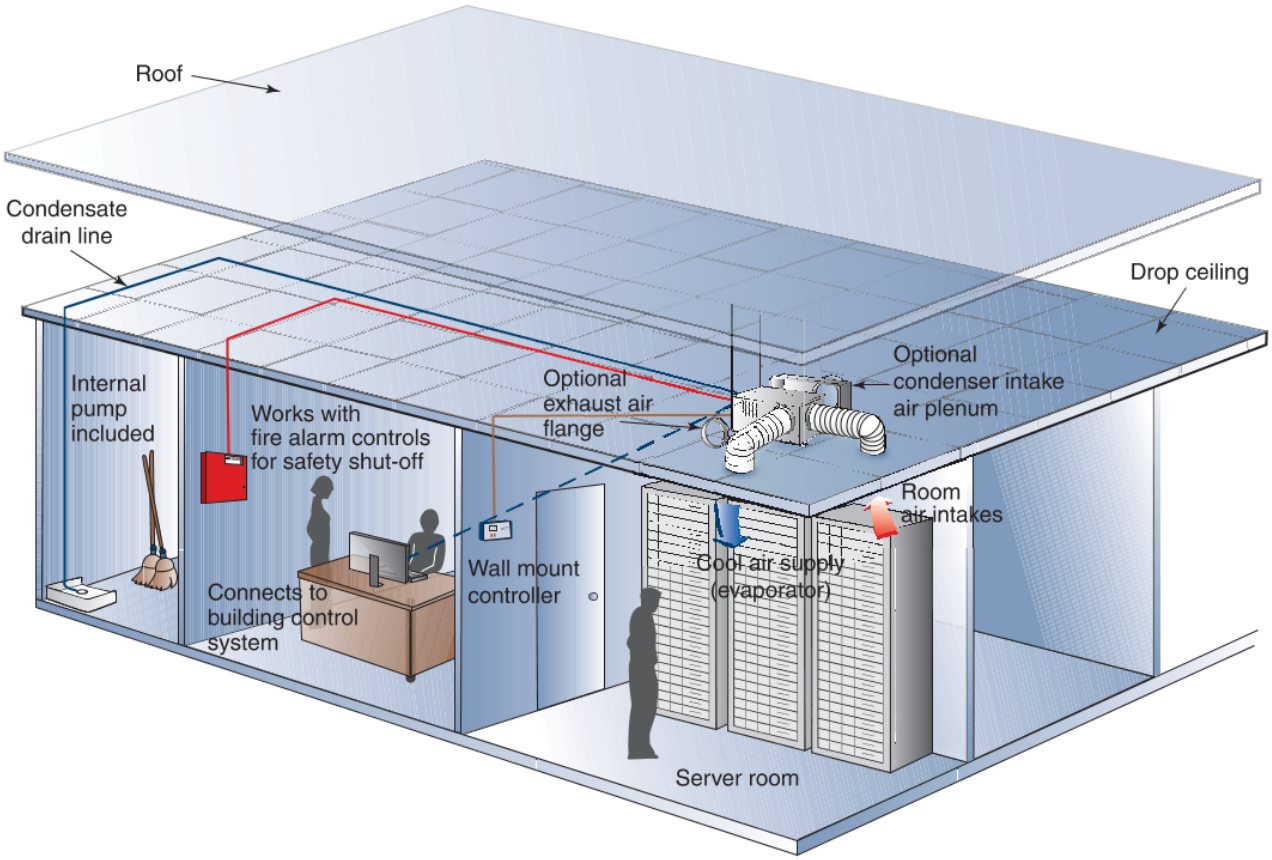

DENSO Sales California, Inc.

Figure 31-34. Between the drop ceiling and roof, this ceiling-mounted air-conditioning unit cools the hot air in the server room and pumps out any condensate.

central air-conditioning system in a large commercial or industrial building is shut off for scheduled maintenance or because of a malfunction, the building's manager can call on one of these rental companies. The rental company will evaluate the customer's cooling needs and install portable air-conditioning equipment to meet those needs.

31.6 Multizone Ductless Split Systems

A ***ductless split system*** is a split air-conditioning system that does not use forced-air ductwork as a means of distributing cooled air. Like traditional split systems, a ductless split system has a condensing unit (compressor and condenser) outside a building that is connected by tubing to a cooling unit (evaporator) inside the building. Ductless split systems often use multiple cooling units throughout a building. These cool the air in individual rooms. The cooling units use fans to pull in warm air, absorb heat into the refrigerant in the evaporator, and blow cool air back into the room. No ductwork is used, **Figure 31-35**.

Since many ductless systems use multiple indoor cooling units through a building, they can be set up as a zoned system, if proper controls and components are available. ***Multizone ductless split systems*** are comfort cooling systems consisting of one or more outdoor units, multiple independent indoor units, and individual temperature controls for each indoor unit. This type of system is similar in design to standard split air-conditioning systems. To provide cooling, the outdoor units function as condensers and the indoor coils function as evaporators. However, multizone ductless split systems deliver conditioned air directly from the indoor unit into the room. There is no ductwork to distribute the air. See **Figure 31-36**.

Multizone ductless split systems are popular for adding air conditioning to both new construction and to older buildings that are not equipped with air duct systems. Ductless systems are frequently used in offices, motels, multifamily dwellings, and houses that use hydronic heating, electric baseboard heat, or

Copyright Goodheart-Willcox Co., Inc.

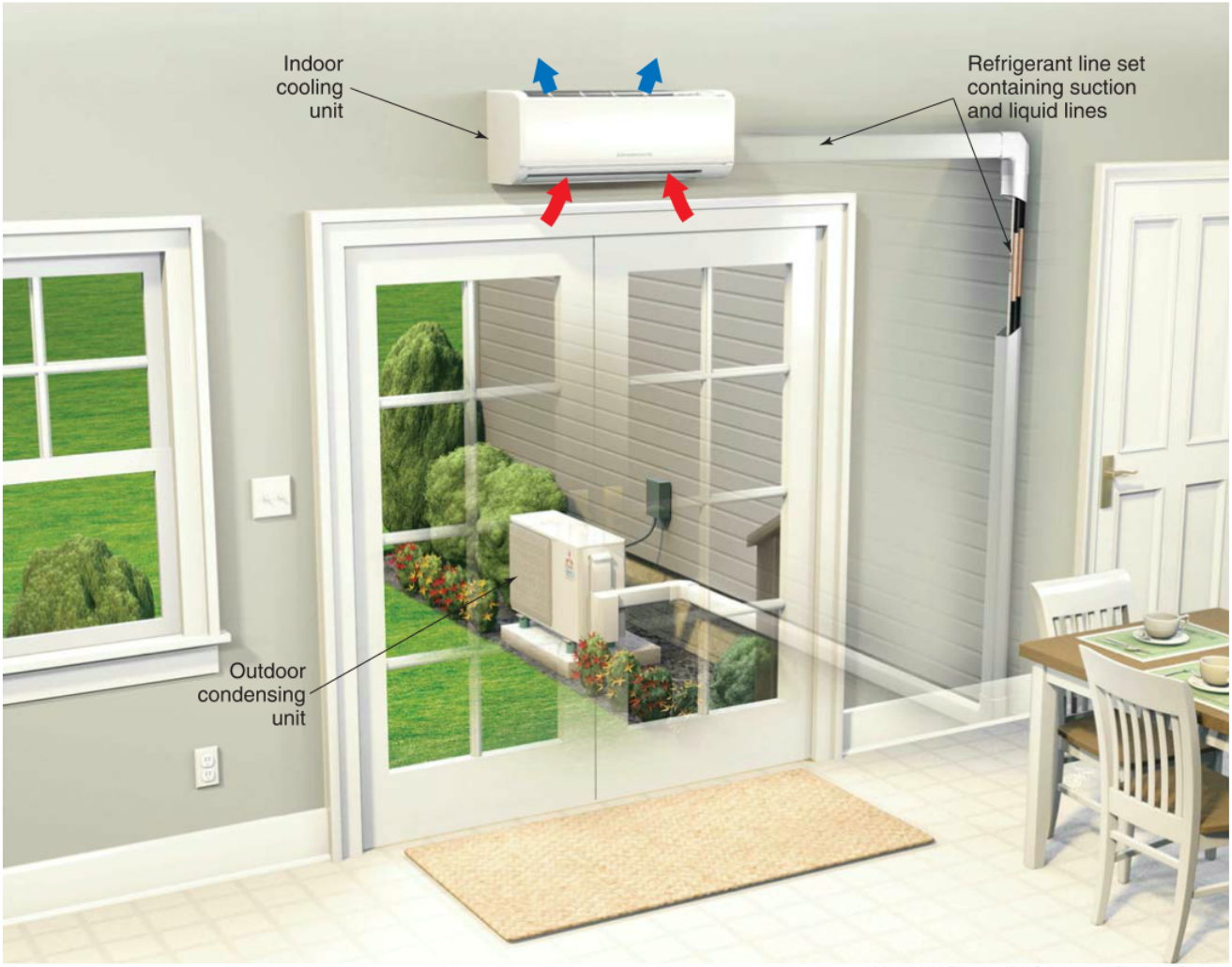

Mitsubishi Electric, HVAC Advanced Products Division

Figure 31-35. A ductless split system. A refrigerant line set connects the indoor and outdoor units. This room is being cooled by its cooling unit.

space heaters. Multizone ductless split systems offer a convenient solution for providing heating and cooling to room additions and small apartments, where extending or installing distribution ductwork for a central air conditioner or heating system may not be an option.

Code Alert

Code Applicability

Many factors affect a building code's applicability to a job. For example, adding air conditioning to a previously unconditioned building may fall under the purview of local building codes. If the building is part commercial and part residential, two different building codes may apply. If the building is a historic landmark, the building may be exempt from local building codes. Always check the applicability of local building codes before beginning a job.

In a multizone ductless split system, an outdoor unit is located outside. These can be installed a number of different ways, depending on the building and the space available. Common installations are on a concrete slab, pads, a wall-mounted bracket, a riser, or metal stand, **Figure 31-37**.

One or more indoor units are installed in separate rooms in the building and are connected to the outdoor unit by a line set. Each indoor unit has its own refrigerant coil, blower, metering device, and sometimes a heating unit. The line set contains the refrigerant lines. This may also be packaged with electrical wiring and a condensate drain, **Figure 31-38**.

The hookup between the outdoor and indoor units usually requires only a 3″ (8 cm) hole through a wall for the line set. Many manufacturers of multizone ductless split systems offer connecting line sets

Copyright Goodheart-Willcox Co., Inc.

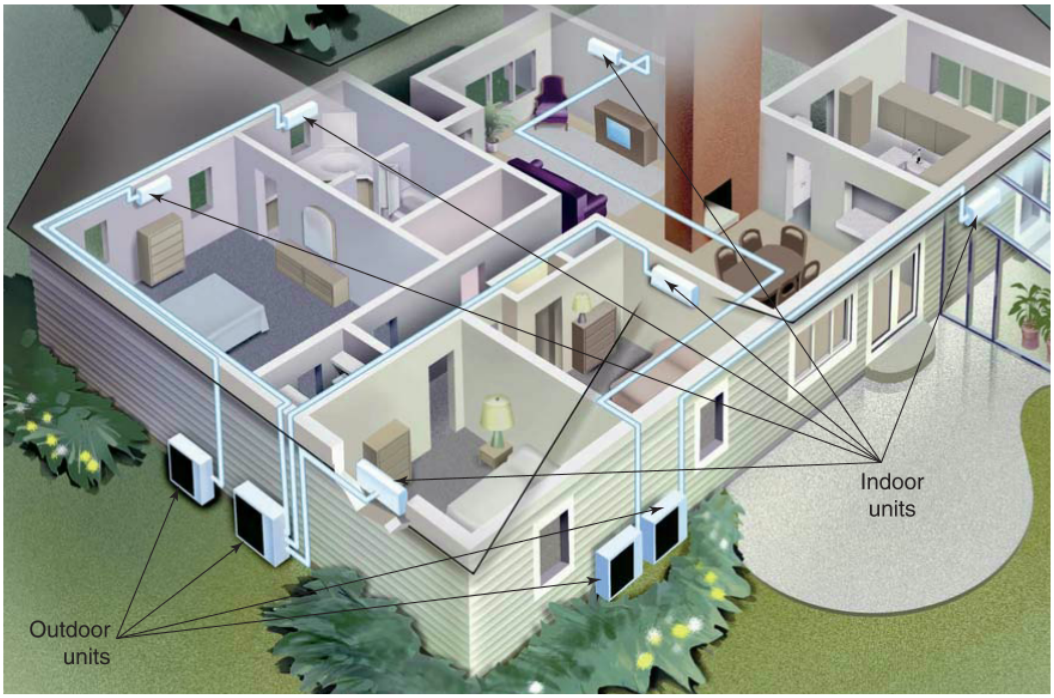

Mitsubishi Electric, HVAC Advanced Products Division

Figure 31-36. This multizone ductless split system consists of four outdoor units and six indoor units. Refrigerant line sets connect the outdoor units to the indoor units.

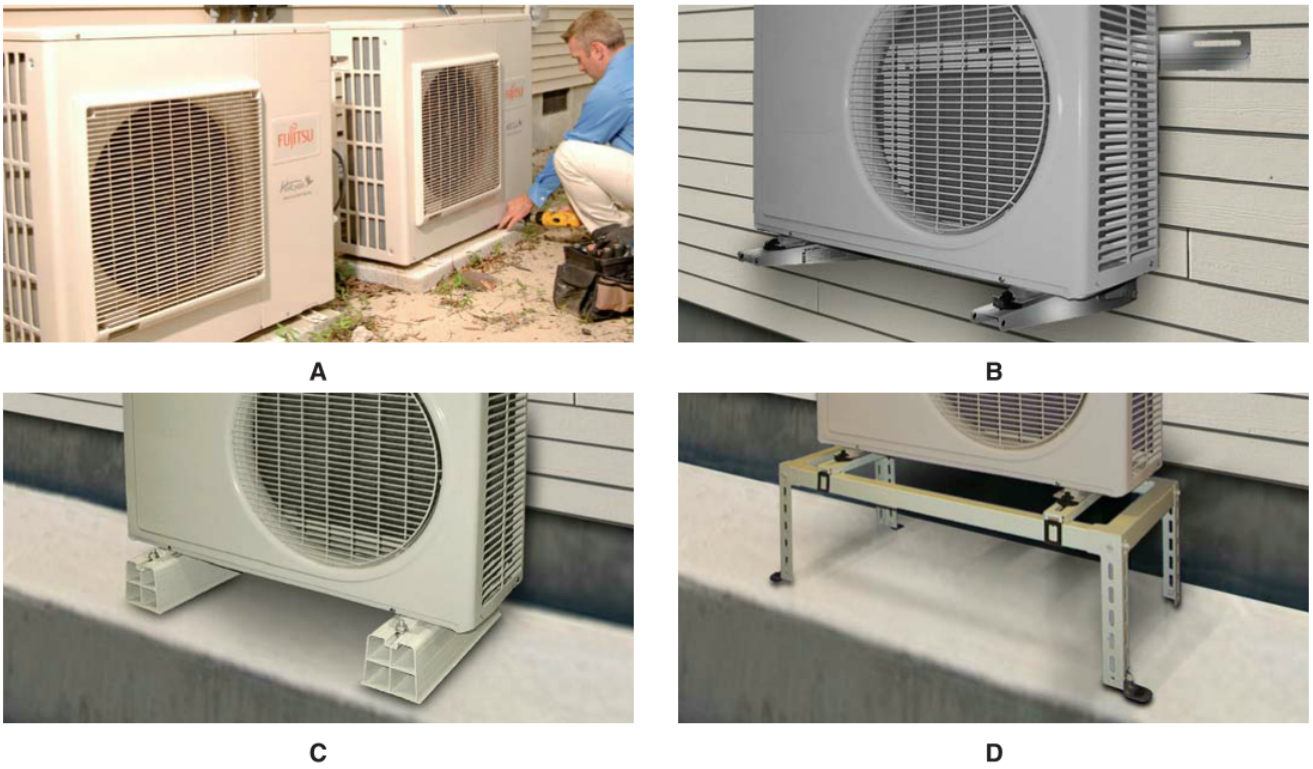

Fujitsu General America, Inc.; RectorSeal

Figure 31-37. Multizone ductless split system outdoor units. A—Two outdoor units mounted on pads. B—Wall-mounted bracket. C—Riser mounting. D—Metal stand mounting.

Copyright Goodheart-Willcox Co., Inc.

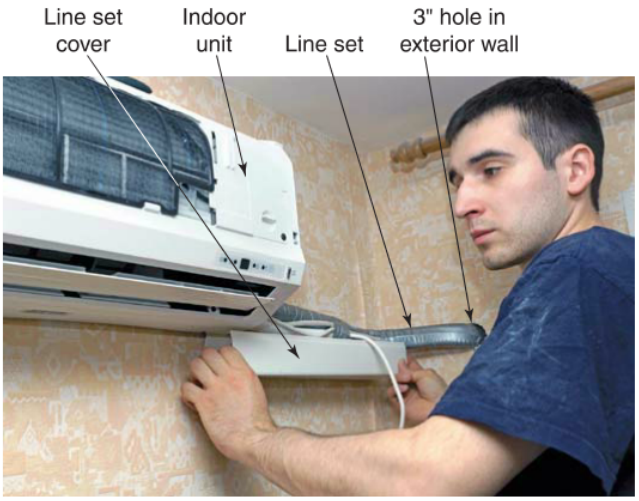

Shcherbakov Ilya/Shutterstock.com

Figure 31-38. A line set from the outdoor unit passes through the building's exterior wall and connects to the indoor unit.

in a variety of lengths. This allows the technician to locate the outdoor unit as far away as 50′ (16 m) from the indoor unit.

An important job of a central air handler in a forced-air system is the filtering of air. Ductless split systems perform this job in each of their indoor units. Air filters are shaped to fit into the indoor units and provide filtration in individual areas, **Figure 31-39**.

Mitsubishi Electric, HVAC Advanced Products Division

Figure 31-39. This indoor unit is shown with its cover and air filters removed.

The independent temperature controls on each indoor unit determine the temperatures maintained in their corresponding spaces. Some multizone ductless split systems provide only cooling while others are heat pumps, capable of providing both heating and cooling. In a cooling-only system, the outdoor units are condensing units and the indoor units are evaporator units. In heat pump systems, the outdoor and indoor units can act as either a condenser or evaporator, depending on whether the heating or cooling mode is selected.

Some of the primary advantages of multizone ductless split systems are as follows:

- Each indoor unit temperature is set individually, enabling the system to maintain different temperatures in different spaces.
- Most units are equipped with a wireless remote control for convenient temperature control. See **Figure 31-40**.
- Because the indoor units can be mounted in a variety of ways (suspension from a ceiling, flush mounted into a drop ceiling, or hung on a wall), multizone ductless split systems provide greater flexibility for interior decorating than room or packaged terminal air conditioners. See **Figure 31-41**. Most indoor units are designed to have a thin profile.

Fujitsu General America, Inc.

Figure 31-40. Multizone ductless split systems are easily programmed using a remote control.

Copyright Goodheart-Willcox Co., Inc.

Fujitsu General America, Inc.

Figure 31-41. Indoor units are available in a number of designs to meet different architectural and interior design demands. A—Wall-mounted unit. B—Slim duct unit can be concealed in a wall or soffit. C—Compact cassette-type can be flush mounted in the ceiling.

Many traditional multizone ductless split systems operate much as a standard heat pump. They use a fixed speed compressor, fixed speed indoor and outdoor fans, and a TXV as the metering device. This requires that they be correctly sized for the heating and cooling load of each zone. Newer multizone ductless units use a variable speed compressor, variable speed fans, and electronic expansion valves (EEVs) to regulate the volume of refrigerant flowing in the system. This allows the system to circulate only the amount of refrigerant needed for a specific load. These units are known as ***variable refrigerant flow (VRF) system*** or *variable refrigerant volume (VRV) system*. VRF systems are covered in more detail in Chapter 32, *Residential Central Air-Conditioning Systems*, and Chapter 33, *Commercial Air-Conditioning Systems*.

31.6.1 Ductless Split System Installation

Ductless air conditioners are installed much as standard split systems are installed. The outdoor unit is mounted outside. This can be done in a variety of manners depending on the building and the space available. Larger outdoor units are often mounted on a concrete slab or mounting pad, **Figure 31-42**. Refer back to **Figure 31-37** for other mounting options.

Many indoor units are mounted on walls, near the ceiling. It can be difficult to hold the unit in place while necessary wiring and other connections are made. Once the wall plate is secured into place, a bracket can be attached to hold the indoor unit in place, **Figure 31-43**.

Programming temperature set points and system controls depends on whether a building uses a single multizone system or more than one condensing unit to operate multiple indoor units. This will vary by each installation. It may be more convenient for a building to have one outdoor unit that works with all the indoor units on ground floor and have a second outdoor unit that works with all the indoor units upstairs.

31.6.2 Ductless Split System Service

Ductless split systems require many of the same services and maintenance procedures as other split

Fujitsu General America, Inc.

Figure 31-42. Two technicians positioning an outdoor unit on a mounting pad.

Copyright Goodheart-Willcox Co., Inc.

RectorSeal

Figure 31-43. This wall bracket allows an indoor unit to be securely held in place while connections are made.

air-conditioning systems. Standard split systems with a central air handler have only one air filter. A ductless split system has at least one air filter in each of its indoor units. A common task is cleaning or replacing the air filters in the indoor units, **Figure 31-44**.

Evaporator coils in indoor units also need to be cleaned on occasion. To do this, remove outer panels, air filters, and any other accessories that could block the flow of cleaning fluid. Set up a large plastic bag or bib to catch and contain the cleaning fluid. This can be directed into a bucket for later draining, **Figure 31-45**.

Fujitsu General America, Inc.

Figure 31-44. This technician is examining an air filter from an indoor unit.

Thinking Green

Dirty Coils Decrease Efficiency

Dirt on evaporator and condenser coils decreases the coil's ability to transfer heat and, in extreme cases, increases resistance to airflow across the coil. To keep the system operating at maximum efficiency, the coils should be cleaned regularly.

As an indoor unit operates, moisture is condensed out of the air and caught in a condensate pan. Some units are designed to drain by gravity, and other units use a condensate pump. This moisture usually drains out. However, some things can go wrong. The drain line could get blocked. The condensate pump may fail to operate. To prevent the spilling of moisture out of an indoor unit, install an overflow switch in the drain pan. When an ***overflow switch*** senses moisture, it will open a switch to shut off operation and prevent the continued accumulation of moisture, **Figure 31-46**.

SpeedClean

Figure 31-45. Use a pressurized washer with a plastic bib and bucket while cleaning an indoor unit's evaporator.

Copyright Goodheart-Willcox Co., Inc.

The cool temperatures and humidity of the condensate pan in indoor units of ductless systems can unintentionally provide a breeding ground for certain microscopic organisms. Even though condensate is drained or pumped away, a small amount of moisture may still remain. To prevent microorganisms from forming in an indoor unit, regularly add ***biocide tablets*** to the condensate pan. These are designed to prevent the formation of slime, algae, mold, and other common contaminants, **Figure 31-47**.

RectorSeal

Figure 31-46. This overflow switch mounts to the condensate pan and turns off the indoor unit when an accumulation of condensate is sensed.

RectorSeal

Figure 31-47. Adding biocide tablets to an indoor unit's condensate pan is often included as part of the unit's maintenance.

Copyright Goodheart-Willcox Co., Inc.

Chapter Review

Summary

- Air-conditioning systems regulate temperature and humidity to provide the conditions needed for comfort or manufacturing operations.
- Comfort cooling systems are used to reduce temperature and relative humidity. Reduction of temperature is done by evaporators absorbing heat from a conditioned space. Once evaporators reduce air temperature down to dew point, moisture begins to condense out of the air. Removing moisture and mixing cooled air with conditioned space air reduces relative humidity levels. The relationship of relative humidity levels, moisture in the air, and temperature can be seen on a psychrometric chart.
- Comfort cooling systems can be classified as self-contained (packaged) or split. A self-contained air-conditioning system is a comfort cooling system with everything necessary for operation in a single cabinet. Examples include room air conditioners and packaged terminal air conditioners (PTACs).
- A split air-conditioning system has its components split into two or more separate locations. A split system's condensing unit may be placed outdoors and its evaporating unit may be placed indoors. Split systems can be ductless or use a central air handler.
- A packaged terminal air conditioner (PTAC) is a combined heating and cooling system in a single case. These are typically larger than room air conditioners. The heating system in a PTAC can be an electrical resistance heater, gas-fired furnace, heat pump, or a combination of a heat pump and electrical resistance heater. These are typically used in commercial applications, such as hotels, offices, and apartments.
- A console air conditioner is a complete air-conditioning system in a stand-up cabinet. These provide cooling and often can also provide heating. Like room air conditioners and PTACs, console air conditioners are installed along an outside wall of a building. Ducts can be attached to supply and return grilles to increase airflow and promote more uniform cooling. Console air conditioners are generally used in commercial applications.
- Portable air conditioners are self-contained, wheeled cooling units. They are generally used in commercial applications where traditional air conditioning cannot be installed or used. Ducts and adapters are available that can be attached to the evaporator air inlet and outlet and also to the condenser air inlet and outlet. These ducts can carry hot air away from the conditioned space, deliver cold air to a desired space, or draw air from a different space to blow over condenser or evaporator. Portable systems can be set up to control temperature, humidity, or both.
- A ductless split system is a split air-conditioning system that does not use forced-air ductwork as a means of distributing cooled air. These systems have an outdoor unit and one or more indoor units connected by refrigerant lines. Air is circulated in a given space by an indoor unit's fan and cooled by the evaporator. No air ducts are used.
- A multizone ductless split system consists of one or more outdoor units (compressor and condenser) connected to multiple independent cooling units throughout a building that operate by individual temperature controls. These system components allow great flexibility in the placement of the indoor and outdoor units, resulting in multiple temperature zones throughout a building.

Review Questions

Answer the following questions using the information in this chapter.

1. Cool air leaving the evaporator of an air conditioner has a relative humidity of 100%. This is because relative humidity level increases as _____.
   A. dry-bulb temperature decreases
   B. dry-bulb temperature increases
   C. moisture in grains per pound decreases
   D. All of the above.
2. A comfort cooling system that has its condensing unit outdoors and its evaporating unit in the center of a building is a _____ air-conditioning system.
   A. console
   B. packaged terminal
   C. room
   D. split

Copyright Goodheart-Willcox Co., Inc.

3. Which of the following is a type of self-contained air-conditioning unit?
   A. A packaged terminal air conditioner.
   B. A through-the-wall room air conditioner.
   C. A console air conditioner.
   D. All of the above.
4. Which of the following window air conditioner installation steps is explained correctly?
   A. Fill the air gap between the upper and lower window sashes with a generous application of expanding foam insulation.
   B. Install the air conditioner so it slopes down toward the inside of the building.
   C. Install the sleeve first and then the chassis.
   D. Lift the chassis while gripping onto the evaporator tubing.
5. Which of the following statements regarding room air conditioner service is *not* true?
   A. It is best to remove the air-conditioner chassis from the sleeve for service.
   B. A loose fan can cause worn fan motor bearings.
   C. Use a metal putty knife to scrape dirt out from between the evaporator cooling fins.
   D. All of the above.
6. To fix hard starts in a room air conditioner with a PSC compressor motor, a technician should _____.
   A. install a larger compressor
   B. install a start capacitor and relay
   C. remove 1/4 of the refrigerant charge to reduce compressor load
   D. use a step-up transformer to double the voltage to the motor
7. Which of the following methods is *not* used to provide heat within a packaged terminal air conditioner?
   A. Electric resistance heater.
   B. Gas-fired heater.
   C. Heat pump.
   D. Wood burning stove.
8. Cooling only a specific, limited area is referred to as _____ cooling.
   A. patch
   B. split
   C. spot
   D. zoned
9. Wheels are most often found on _____.
   A. console air conditioners
   B. ductless split systems
   C. portable air conditioners
   D. PTACs
10. When installing a ductless split system indoor unit, a _____ is typically necessary.
    A. 3″ (8 cm) hole wall opening
    B. 42″ × 16″ wall opening
    C. gas supply drip leg
    D. typical window opening
11. Which of the following statements is true of multizone ductless split systems?
    A. The system can have multiple indoor units attached to a single outdoor unit.
    B. The system can have multiple outdoor units.
    C. They are a popular choice for adding air conditioning to buildings that are not equipped with ducts.
    D. All of the above.
12. Which of the following statements regarding multizone ductless split systems is *not* true?
    A. A single, central thermostat controls the temperature in all conditioned spaces.
    B. A line set connects an indoor unit and outdoor unit.
    C. A variety of different indoor unit styles is available.
    D. All of the above.
13. _____ refrigerant flow circulates only the amount of refrigerant needed for a specific load.
    A. Portable
    B. Self-contained
    C. Spot cooling
    D. Variable
14. What should be added to a ductless split system's indoor unit to prevent the growth of microorganisms?
    A. Biocide tablets.
    B. A condensate pump.
    C. High-temperature cutoff switch.
    D. An overflow switch.
15. Which device is used to prevent spilling of condensate from a ductless split system's indoor unit?
    A. Air filter.
    B. Biocide tablets.
    C. Mounting bracket.
    D. Overflow switch.

Copyright Goodheart-Willcox Co., Inc.

CHAPTER 32 Residential Central Air-Conditioning Systems

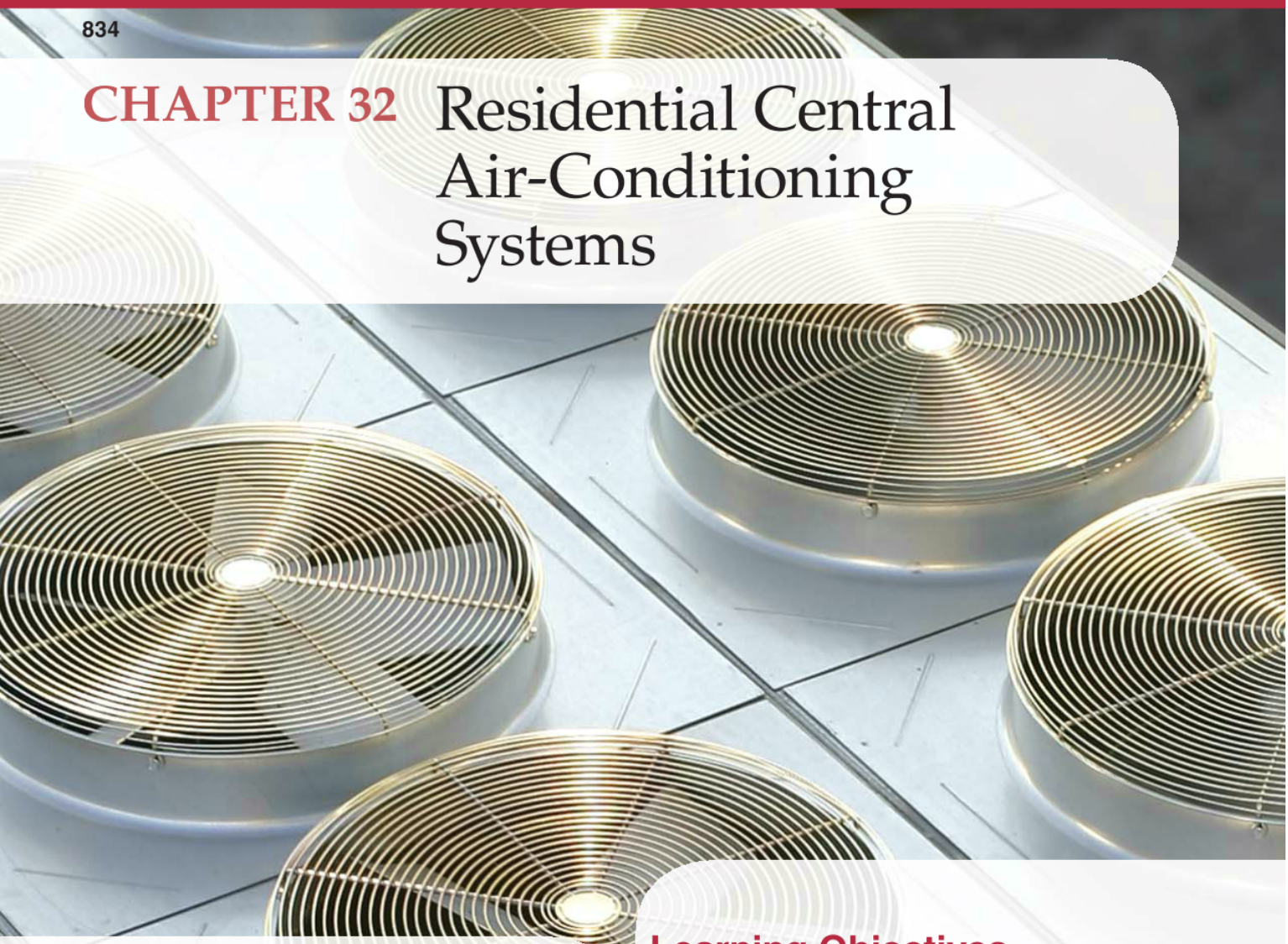

Chapter Outline

32.1 Central Air Conditioning
- 32.1.1 Unitary Systems
- 32.1.2 Field-Erected Systems

32.2 Split Systems
- 32.2.1 Unitary Split Systems
- 32.2.2 Field-Erected Split Systems

32.3 Comfort Cooling Controls

32.4 Installing Central Air Conditioning
- 32.4.1 Installing a Condensing Unit
- 32.4.2 Installing an Evaporator
- 32.4.3 Installing Refrigerant Lines
- 32.4.4 Installing Electrical Wiring

32.5 Inspecting Central Air-Conditioning Systems

32.6 Servicing Central Air-Conditioning Systems

32.7 Variable Refrigerant Flow (VRF) Systems
- 32.7.1 Inverter-Driven Compressors
- 32.7.2 Residential VRF Systems

Learning Objectives

Information in this chapter will enable you to:

- Identify the characteristics of a central air-conditioning system.
- Explain the differences between unitary and field-erected air-conditioning systems.
- Identify the characteristics of a split air-conditioning system.
- Identify the types of controls commonly used in central air-conditioning systems.
- Summarize the steps required to install central air-conditioning.
- Identify the areas of a central air-conditioning system that must be periodically inspected.
- Explain the tasks that must be completed as part of central air-conditioning system service.
- Understand the operation of variable refrigerant flow (VRF) as it is used in residential heating and cooling systems.

Technical Terms

access valve lock
blank-off plate
central air-conditioning system
field-erected air-conditioning system
quick-connect coupling
unitary central air-conditioning system
Y tube

Review of Key Concepts

Reviewing these concepts from earlier chapters will help you understand new concepts presented in this chapter:

- The three major components in a control system are sensors, controllers, and controlled devices. (Chapter 16)
- There are five basic types of compressors used in refrigeration systems: reciprocating, rotary, scroll, screw, and centrifugal. (Chapter 18)
- Air-conditioning systems simultaneously control temperature, provide filtered airflow, and adjust humidity to maintain desired conditions inside a space. (Chapter 27)
- Humidity is the moisture contained in air. The quantity of humidity in the air affects evaporation rates. Drier air results in more rapid evaporation, which in turn provides more cooling effect. (Chapter 27)
- Air at a given temperature can hold only a certain amount of moisture. The warmer the air is, the more moisture it can hold. The colder the air is, the less moisture it can hold. (Chapter 27)
- To improve air quality, air can be cleaned with filters, ultraviolet lights, or a combination of these measures. (Chapter 28)
- Most refrigerant-carrying tubing used in HVACR is made of copper and is known as air conditioning and refrigeration (ACR) tubing. Steel pipe is used in refrigeration systems containing ammonia. Copper water tubing and plastic pipe are used for water lines, drains, and other nonrefrigerant applications. (Chapter 8)
- Two methods for determining a refrigeration system's charge are checking the system's subcooling and superheat. Active recovery processes use a recovery machine to remove refrigerant from a system in either vapor or liquid form. (Chapter 11)
- One method of leak detection involves pressurizing a system with an inert gas, such as nitrogen or carbon dioxide. Another method of leak detection uses the pressurized refrigerant already charged in the system. Another method requires the technician to add inert gas and a trace amount of refrigerant to an evacuated system to create a positive pressure. (Chapter 11)
- After any internal component is replaced, a refrigeration system must be evacuated and recharged. A digital scale is used to charge a system with a specific amount of refrigerant. (Chapter 11)
- A split air-conditioning system divides its components into two or more separate locations. A split system's condensing unit may be placed outdoors and its evaporating unit may be placed indoors. (Chapter 31)

Introduction

The ability to comfortably and cost effectively condition the air within multiple rooms in homes has led to an increased demand for central air conditioning. What was once considered a luxury for homeowners is now a standard feature. Therefore, it is important for the technician to be familiar with these systems.

Videos

- Central AC Systems
- Installing a Split Residential AC System

32.1 Central Air Conditioning

A standard split air-conditioning system has its components in two or more separate locations. A split system's condensing unit is often located outdoors, and its evaporating unit is placed indoors. Often, the evaporator is installed in a central air handler cabinet that is connected to a network of ducts. Some of the ducts are used to deliver conditioned air, and other ducts are used to return air to the air handler. Cooled and dehumidified air is distributed to the conditioned spaces through a series of supply ducts and returned to the evaporator through return ducts. This arrangement of using forced air to cool a conditioned space describes a ***central air-conditioning system***.

An air handler distributes conditioned air throughout a building. Such a system usually provides heating, cooling, humidity control, ventilation, and air cleaning to multiple spaces. A complete residential central air-conditioning system is shown in **Figure 32-1**.

Typically, the conditioned air is routed to the desired spaces through a network of fixed ducts. A central air-conditioning system shown in **Figure 32-2** uses a gas-fired furnace to provide heat. A compression refrigeration system provides the cooling, **Figure 32-3**. In the system shown, an A-coil evaporator is located in the furnace plenum chamber. The condensing unit (compressor, condenser, and condenser fan) is located outside the building.

Generally, an air-conditioning system uses a metering device to control refrigerant flow into its evaporator. The type of metering device used depends on system size and application. See Chapter 20, *Metering Devices*, for more information.

A single combination heating and cooling thermostat is often used in central air-conditioning systems. Conditioned air is forced throughout a building by a blower. The blower is typically positioned just after an air filter and the return air plenum. With this arrangement, the air filter in the return air plenum cleans the air before it reaches the blower. An arrangement is sometimes provided to bring in fresh outside air as needed. The fresh air inlet may be controlled thermostatically, manually, or by air pressure.

Some systems use a humidistat to control relative humidity in the conditioned space. Such systems usually have a humidifier in the plenum chamber that adds moisture to the air when the furnace is operating. During hot weather, the thermostat may call for cooling. The same air handler and ductwork is used

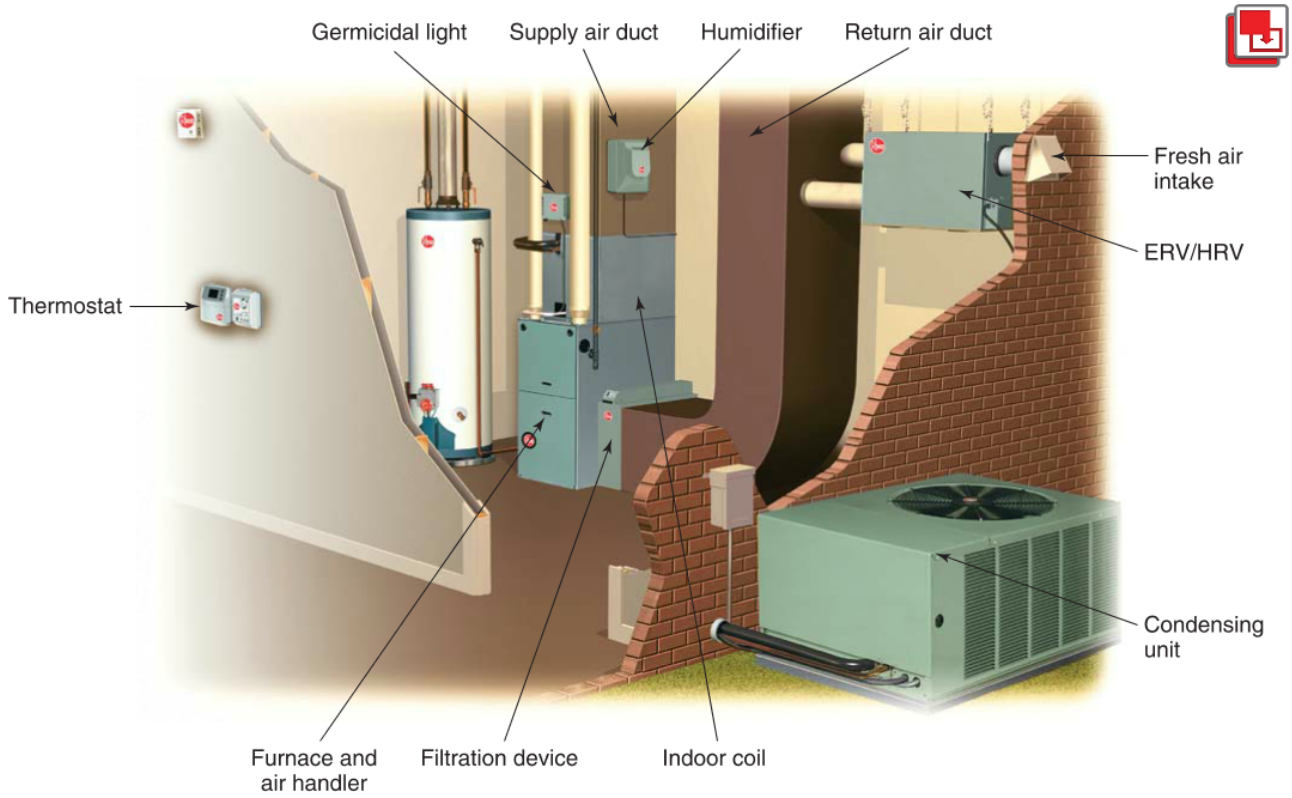

Rheem Manufacturing Company

Figure 32-1. A complete residential central air-conditioning system.

Copyright Goodheart-Willcox Co., Inc.

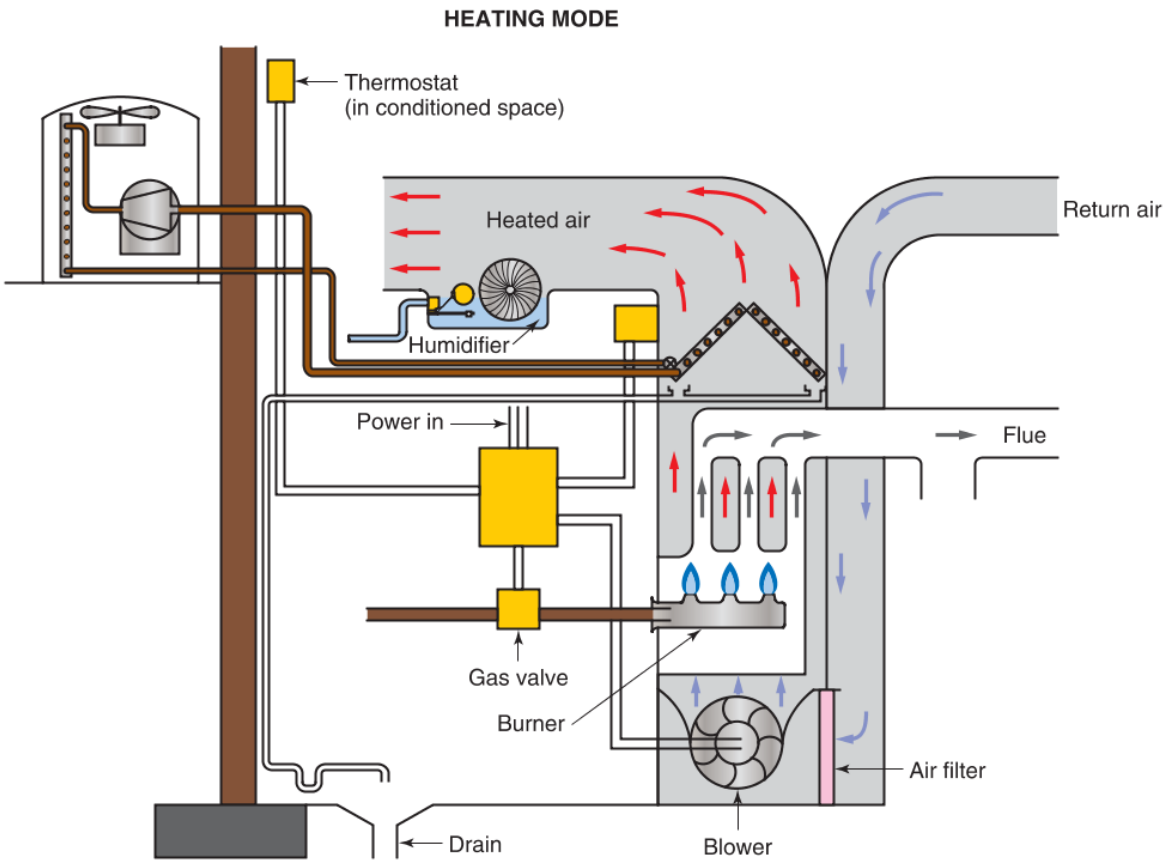

Goodheart-Willcox Publisher

Figure 32-2. A complete central air-conditioning system that provides both heating and cooling. The heating cycle is shown here, using a gas-fired furnace. A humidifier in the plenum chamber adds moisture to the warmed air. The same blower and air filter are used for both summer and winter operation.

for heating and for cooling. However, when the cooling mode is activated, the furnace's burner is off and the evaporator is cold. The evaporator lowers the temperature of the air blown through it. At the same time, any excessive humidity in the air is condensed on the evaporator's cold surface and drained away.

32.1.1 Unitary Systems

There are two basic types of central air-conditioning systems: unitary and field-erected. ***Unitary central air-conditioning systems*** are complete, with all the components needed to heat, cool, dehumidify, filter, and move air included. These units are a complete package, ready for assembly. Unitary systems are used mainly in new or retrofit home installations and small commercial installations. The main advantages of unitary systems are their low cost and the ease of installation.

Unitary equipment may be single package or a split system. Single package units consist of all components in one package. In a single package unit, all internal wiring and piping has been done. Unitary split systems consist of an indoor unit (fan and evaporator) and a matching outdoor unit (condenser and compressor), bundled together by the manufacturer.

32.1.2 Field-Erected Systems

In ***field-erected air-conditioning systems***, all major system components are purchased individually and assembled at the spot where the system is to be used. The installer is responsible for selecting the proper components to perform the required functions and to carry the estimated loads. All components must be compatible with each other. This includes the air handler, compressor, condenser, evaporator, tubing, and controls. Field-erected systems are primarily used in commercial or industrial applications. They may also be used to heat and cool various sections of a large building.

Copyright Goodheart-Willcox Co., Inc.

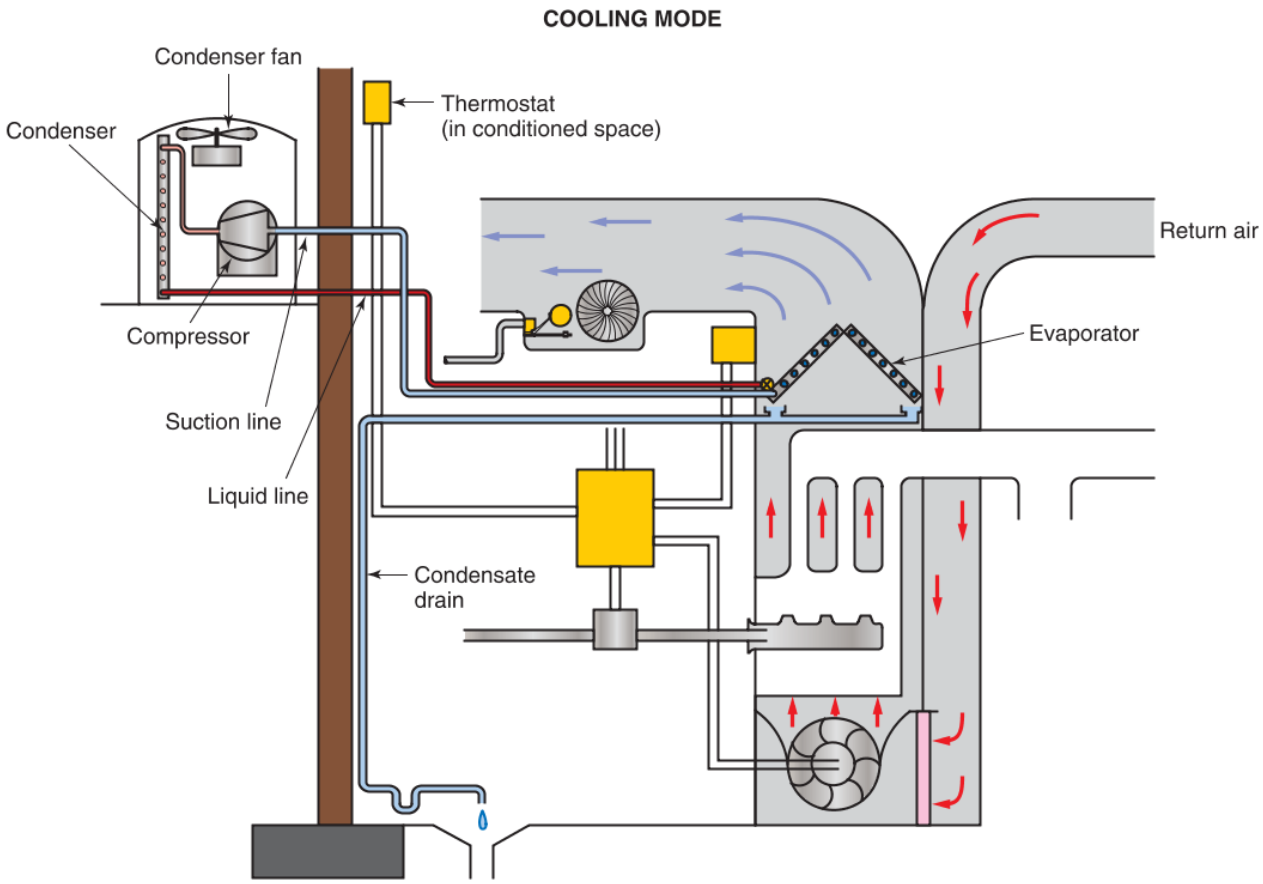

Goodheart-Willcox Publisher

Figure 32-3. A central air-conditioning system in cooling mode. An A-coil evaporator coil in the plenum cools air forced through it by the blower. The outside condensing unit rejects the heat absorbed in the evaporator. Humidity is removed by condensing excess moisture on the evaporator surface. A drain tube carries away the condensed moisture.

32.2 Split Systems

In a split system, the condensing unit is located away from the evaporator. Many systems use evaporators with aluminum fins mechanically bonded to copper tubing. Other condensers and evaporators are built with aluminum spines fastened to aluminum tubing to reduce corrosion. Plastic grilles are often used on the condensing unit to avoid corrosion problems.

Figure 32-4 shows the internal construction of a heat pump's outdoor coil unit. The microprocessor control board controls the compressor, outdoor fan speed, and other electronic parts. It also provides information on the performance of the system. The unit also has an electronic demand defrost. This prevents ice from building up on the outdoor coil.

In heat pump–based central air conditioning, an electronic thermostat like the one shown in **Figure 32-5** monitors both indoor and outdoor temperatures. The LCD on the thermostat face shows the indoor temperature and outdoor temperature. It also shows whether the unit is in a heating or cooling mode.

32.2.1 Unitary Split Systems

Sometimes a split system is ordered completely assembled and charged. It will include the condensing unit, evaporator, controls, and tubing. The complete assembly is shipped as a single package. The tubing needed is usually carefully wrapped around the evaporator.

Work required at the point of installation includes the following steps:

1. Uncrating and carefully unwinding the tubing from the evaporator.
2. Installing the condensing unit and evaporator in their proper places.
3. Making the necessary electrical and control connections.

This type of a preassembled refrigeration system requires careful handling, since it is charged

Copyright Goodheart-Willcox Co., Inc.

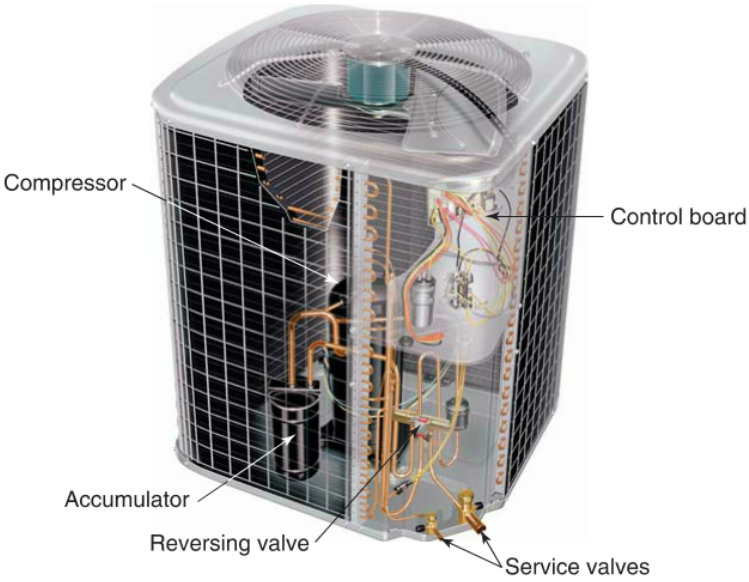

Tempstar

Figure 32-4. Note the location of the reversing and the service valves in this cutaway view of a microprocessor-controlled heat pump. A technician can attach a manufacturer-supplied control reader to the control unit to obtain system performance data.

Rheem Manufacturing Company

Figure 32-5. A typical electronic wall thermostat with an LCD screen that displays indoor temperature, outdoor temperature, and heating or cooling mode. The thermostat can be used to raise the temperature, lower the temperature, take indoor and outdoor temperature readings, select heating or cooling mode, and select continuous or automatic fan operation.

with refrigerant. The technician must be careful while uncrating the tubing to avoid creating kinks. The kinked areas might later crack and leak.

Another type of unitary system consists of an evaporator, condensing unit, and line set that come as an unassembled but matched set, sized for the application. One or more of the components come precharged. The precharged components contain enough refrigerant for the entire system. The technician then connects the various components on-site.

Some manufacturers provide flare fittings for connecting the evaporator coil and compression or braze fittings for connecting the condensing unit. Other manufacturers provide ***quick-connect couplings*** for connecting the parts. These couplers may be connected without losing refrigerant or getting air into the system.

Quick-Connect Couplings

Quick-connect couplings enable manufacturers to produce precharged refrigeration and air-conditioning units. Necessary tubing is also provided in separate packages. These separate units can be assembled at the installation site. They are ready to operate without evacuating, charging, or cleaning.

Quick-connect couplings are brazed directly to the tubing. Flared joints are not needed. There are two types of quick-connect fittings:

- Those that can be connected and disconnected many times with very little loss of refrigerant. When this type of coupling separates, independent springs force valves in both halves of the coupling to close. This prevents the escape of refrigerant. This type of coupling is very seldom used.
- Those that can only be quick-connected once. The ends of these couplings are sealed off with diaphragms. When the two halves of the coupling are connected, the diaphragms are punctured. This allows refrigerant to pass through the coupling. See **Figure 32-6**. If these couplings ever need to be disconnected, the refrigerant must first be removed from the system.

Copyright Goodheart-Willcox Co., Inc.

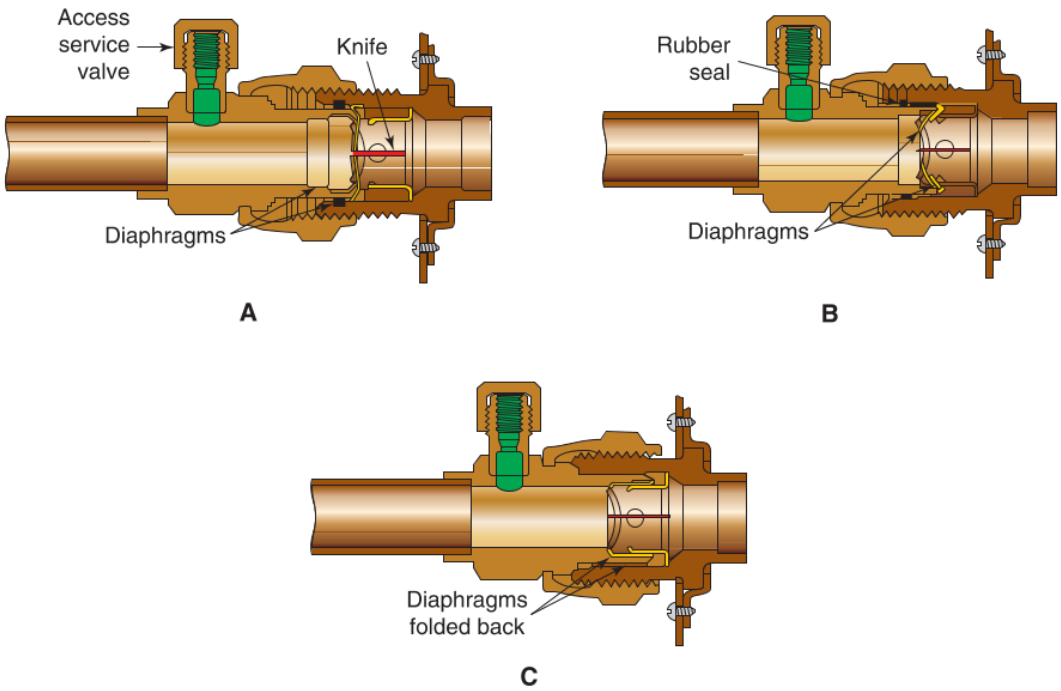

Aeroquip Corp.

Figure 32-6. Quick-connect coupling equipped with a service valve. A—A knife edge aligns with and begins piercing the diaphragm. B—As the fitting is tightened, the diaphragm is punctured. C—When the diaphragm is punctured, refrigerant can flow through the coupling. The flow of refrigerant folds the remnants of the diaphragm out of the way.

To assemble either type of quick-connect fitting, align the couplings and tighten the coupling nut. This draws the coupling together. Quick-connect fittings are used mostly on precharged residential air-conditioning systems. They are also used on precharged transportation units. Units are usually charged at the factory. The condensing unit, refrigerant lines, and evaporator are charged separately. **Figure 32-7** shows a liquid line that has an access (service) port.

The gasket that joins the quick-connect fittings should be covered with clean, dry refrigerant lubricant just before assembly. When tightening quick-connect fittings, avoid applying excessive pressure to the wrench. Excessive pressure may distort the fitting and cause it to leak. Two wrenches should be used to tighten the fitting to prevent the tubing from twisting, **Figure 32-8**. Some quick-connect fittings can be resealed several times with the use of a special tool.

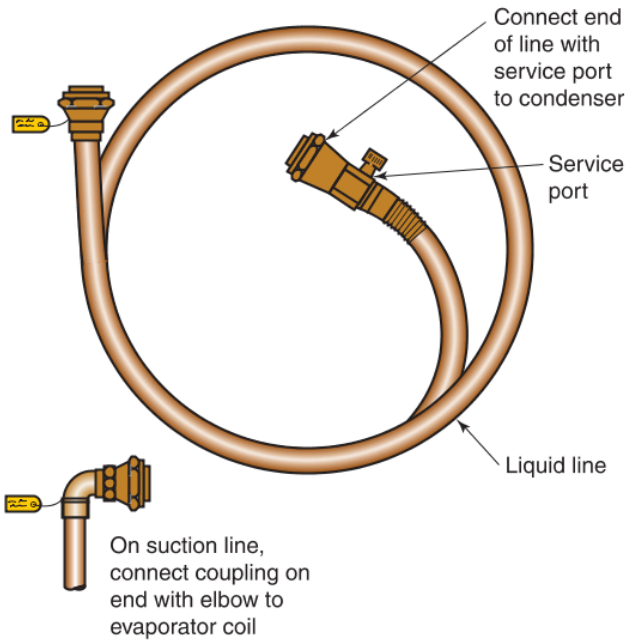

York International Corporation, Unitary Products Group

Figure 32-7. Liquid line equipped with quick-connect fittings. The service port is used for making gauge manifold high-side pressure connections.

32.2.2 Field-Erected Split Systems

For a field-erected split system, the condensing unit, evaporator, controls, air handler/furnace, and tubing are purchased individually. The air-conditioning system is then assembled on the customer's premises. Most of these components are combined into a

Copyright Goodheart-Willcox Co., Inc.

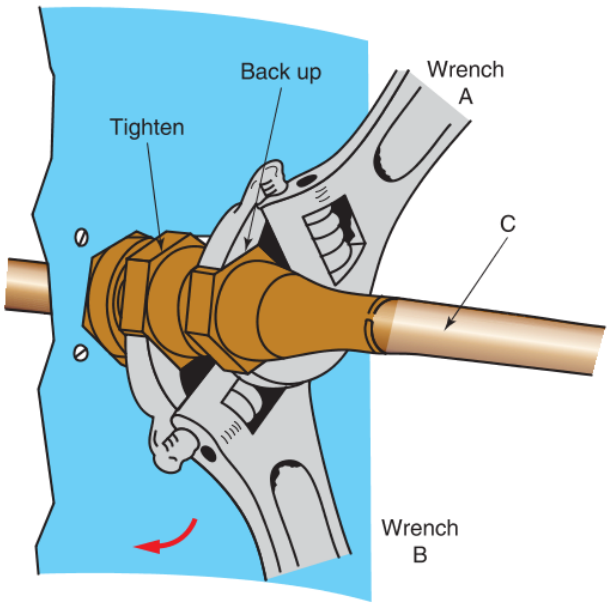

Aeroquip Corporation

Figure 32-8. Correct way to tighten a quick-connect coupling. Wrench A is held firmly while wrench B is turned. Note that the sleeve closest to the wall turns, but the sleeve on tubing C does not.

forced-air heating and cooling system. **Figure 32-9** shows an air handler with gas furnace used to distribute conditioned air throughout a building. To add cooling to this furnace, an evaporator would be installed in the plenum above the heat exchanger, **Figure 32-10**.

Each evaporator requires a condensing unit to pressurize and circulate refrigerant through the system. The refrigerant coil of many outdoor, air-cooled condensers line the inner walls of the unit. A fan draws air into the condensing unit around the condenser coil and discharges air upward and outward, **Figure 32-11**.

A field-erected split system's evaporator coil and condensing unit must be large enough to provide adequate cooling, but they must also be sized to run long enough during each On cycle to provide adequate dehumidification.

32.3 Comfort Cooling Controls

The term *central air conditioning* implies a system that uses a distribution system (such as a network of ducts) to provide heating, cooling, humidification, and dehumidification. In many systems, electrostatic air cleaning is also provided. The components of these systems often use electrical controls.

Controls for comfort cooling include operating controls and safety controls. Operating controls regulate the normal operation of the system. Safety controls

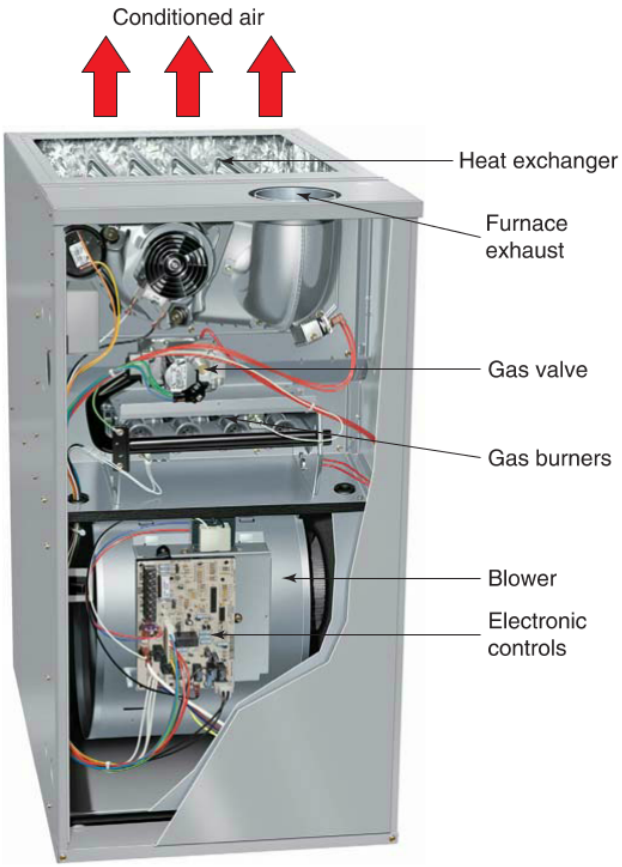

Tempstar

Figure 32-9. This air handler contains a gas furnace and heat exchanger for warming air circulated by the blower.

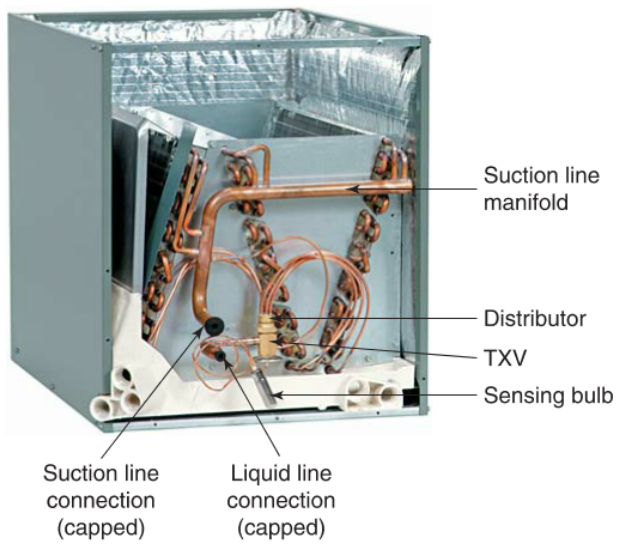

Rheem Manufacturing Company

Figure 32-10. This evaporator is already fitted into a plenum and ready to be added onto a forced-air furnace installation.

10

Copyright Goodheart-Willcox Co., Inc.

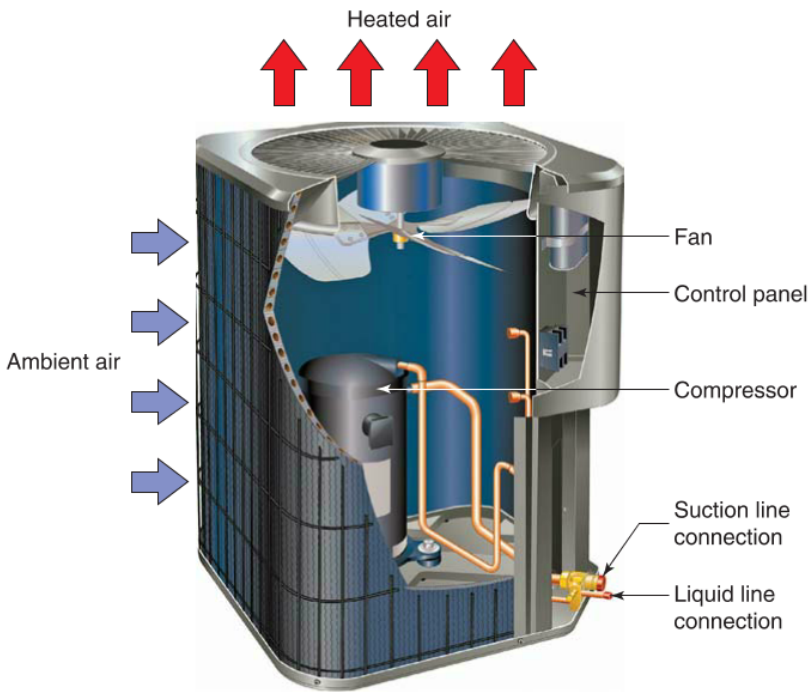

Lennox Industries Inc.

Figure 32-11. To condense and subcool the circulating high-pressure refrigerant, a central air-conditioning condenser draws in ambient air through the sides of the unit and discharges it out of the top of the unit.

regulate safe operation by turning components on or off in order to protect system components and building occupants.

Operating controls can include thermostats, pressure switches, humidistats, motor starters, and relays. Safety controls can include electrical fuses, circuit breakers, thermal overloads, internal motor overloads, refrigerant pressure limit controls, and oil pressure controls. Many of these controls are described in Chapter 16, *Electrical Control Systems*. For more information on thermostats, see Chapter 36, *Thermostats*.

The heating controls govern the operation of the heating system. A room thermostat calls for heat until the desired room temperature is reached. Then, the electrical circuit is opened and the heating device deactivated. Details concerning the arrangement, installation, and operation of heating system controls are provided in later chapters.

A room thermostat usually controls comfort cooling as well. This thermostat may be a separate instrument, or may be built in with the heating thermostat. The room thermostat turns on the comfort cooling system when the temperature of the room rises above a certain set point. It shuts off the cooling system when the temperature has been lowered to the desired level. A typical schematic diagram for a compressor with 1 hp or less is shown in **Figure 32-12**.

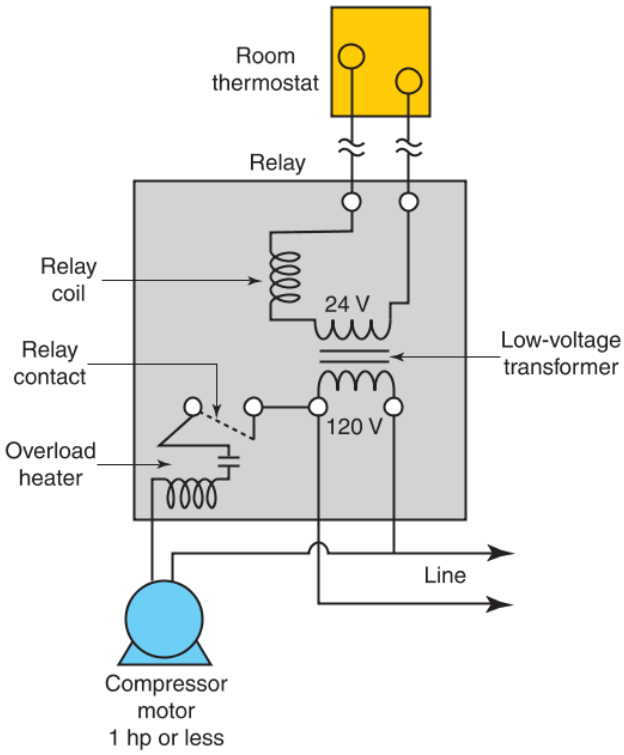

Goodheart-Willcox Publisher

Figure 32-12. Wiring diagram of thermostat relay combination for small cooling systems.

Copyright Goodheart-Willcox Co., Inc.

Many residential comfort cooling systems use a low-voltage thermostat. The thermostat controls a contactor that closes the compressor's motor circuit. Pressure safety devices are also installed in the circuit. A high-pressure safety switch is wired in series with the starter coil. It will open the circuit if pressures become too high, **Figure 32-13**.

Automatic controls make it possible for a central system to change from heating to cooling. If the outside air is at a certain temperature above the heating thermostat setting or a certain temperature below the cooling thermostat setting, some systems will draw in outside air to maintain a comfortable temperature inside the building. In such cases, the air-conditioning system is performing only as an air distribution and air-cleaning system. This permits the greatest economy of operation, as comfort is maintained and the minimum amount of fuel is consumed.

32.4 Installing Central Air Conditioning

Before installing an evaporator and condensing unit to an existing furnace or air handler, examine the existing system. If a furnace is old and worn or its efficiency rating is low, consider replacing the furnace with a higher efficiency model. After deciding, systems are assembled on-site in four steps:

1. Install the condensing unit.
2. Install the evaporator.
3. Install the suction and liquid lines.
4. Install the electrical wiring.

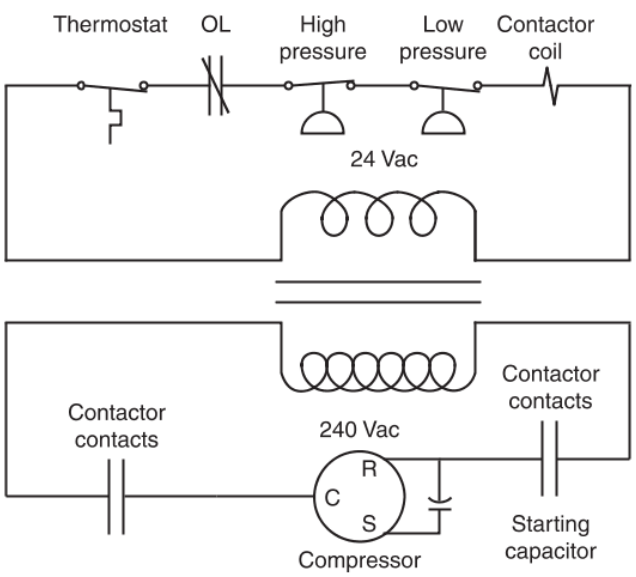

Goodheart-Willcox Publisher

Figure 32-13. Wiring diagram for a comfort cooling unit that uses pressure safety cutouts and a contactor.

Thinking Green

Replacing an HVAC System

When replacing an HVAC system, always calculate the heating and cooling loads to properly size the replacement system. Do not assume that the replacement system should have the same capacity as the system it is replacing. Changes made to the building since the previous system was installed, such as the addition or removal of windows, doors, and insulation may make a larger or smaller system more efficient. Even changes in shading due to maturing trees or new construction around the building can have a significant effect on the heating and cooling loads.

Thinking Green

Life Cycle Cost Analysis

Often, the initial cost (purchase and installation) of a system is less than 10% of the lifetime cost of the system. When comparing systems, it is often beneficial to compare the total life cycle costs of the systems rather than the initial costs. This type of evaluation takes into consideration such factors as energy efficiency and maintenance costs.

32.4.1 Installing a Condensing Unit

Most condensing units blow outdoor air over the condenser coil in order to cool the coil. However, some systems have water-cooled condensers. Condensing units can be installed in a number of different locations. Some condensing units are mounted inside the building. In this arrangement, ducts bring outdoor air to the condenser and discharge warm air outside. Some condensing units are mounted on an outside wall.

A popular practice is to mount a condensing unit on a permanent concrete slab or manufactured pad outside the building. This slab is located 12″ to 24″ (31 cm to 61 cm) away from the building. A concrete slab at least 4″ (10 cm) thick and reinforced with steel mesh is recommended. Manufactured pads are available in different size and thickness. Be mindful of local building codes to install a slab or pad having the proper thickness and the proper distance from any building or obstruction. Adequate work space is necessary. A condensing unit should be installed so that outlet air moves in the same direction as the prevailing summer winds. **Figure 32-14** shows various condensing unit arrangements.

The location of the condensing unit is important. The suction and liquid lines and electrical power lines should be as short as possible. The condensing unit should be carefully located:

Copyright Goodheart-Willcox Co., Inc.

- Away from bedrooms, patios, and neighbors (to minimize noise pollution).
- At least 24″ (61 cm) away from walls (for air circulation and adequate work space).
- Away from inside corners (for air circulation).
- Not under eaves (to not obstruct airflow).

Figure 32-15 shows acceptable and unacceptable locations for a condensing unit. If possible, a condensing unit should be placed along the north side of a building, where it will enjoy shade throughout the day and not endure the heat load of the sun.

A condensing unit should be mounted level, and with the proper clearances around the unit. **Figure 32-16** shows a typical condensing unit and the required clearances around the unit. Always follow the manufacturer's recommendations for locating the condensing unit.

Pro Tip

Preventing Refrigerant Theft

A condensing unit that is in plain sight or monitored by security cameras can discourage refrigerant theft. Another method of prevention is the installation of ***access valve locks***. These devices are installed on the access valves of service valves. Keys and tools used to unlock these devices should only be made available to homeowners and HVACR service technicians. Many locks are color coded to indicate the type of refrigerant charge, **Figure 32-17**.

32.4.2 Installing an Evaporator

An evaporator must be mounted level and solidly in the furnace bonnet or plenum chamber. The design of the evaporator and its condensate drain depend on the type of furnace (upflow, downflow, or horizontal flow). Removable panels are installed in the plenum or

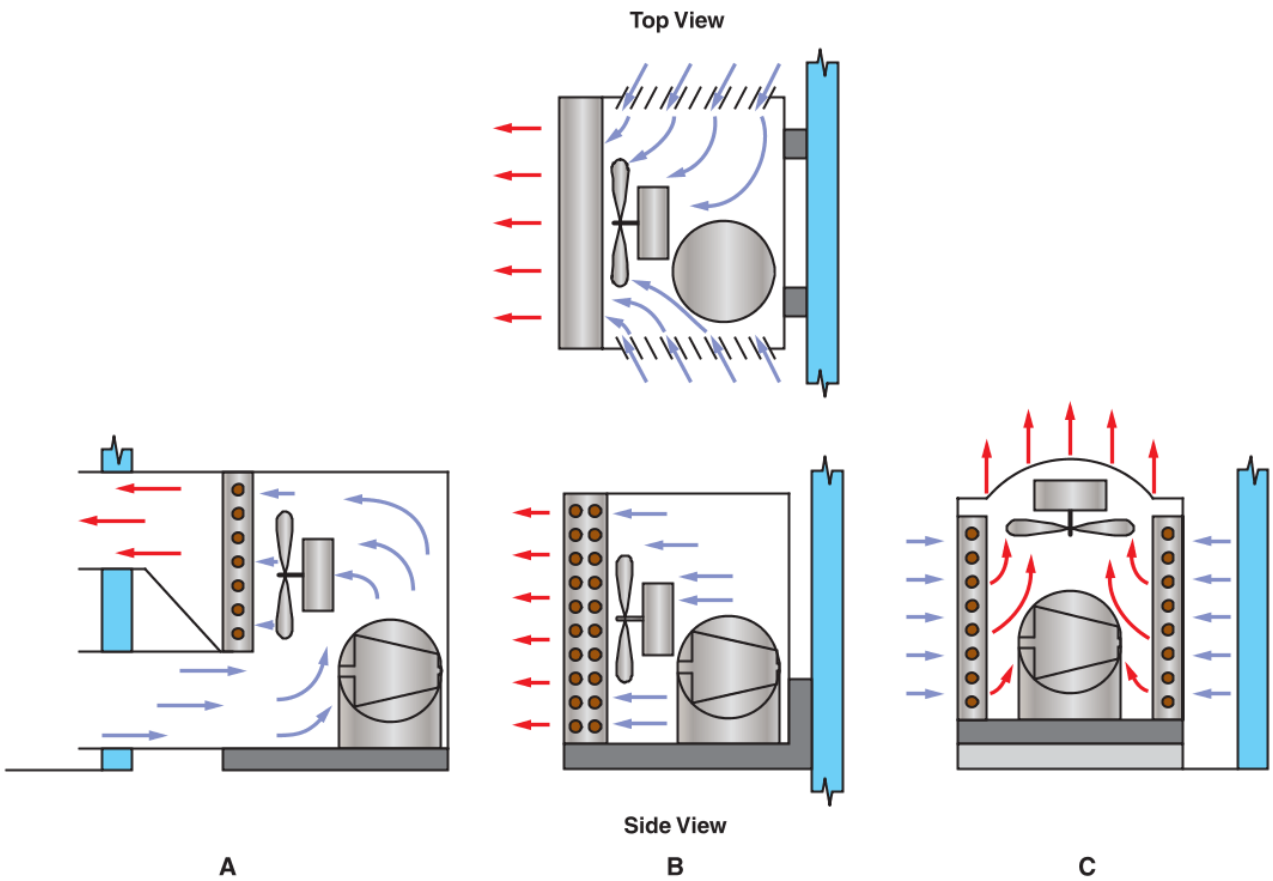

Goodheart-Willcox Publisher

Figure 32-14. Three types of air-cooled condensing units for residential air-conditioning installations. A—Condensing unit inside building. B—Unit hung on outer wall (usually through window). C—Unit mounted on concrete slab outside building.

Copyright Goodheart-Willcox Co., Inc.

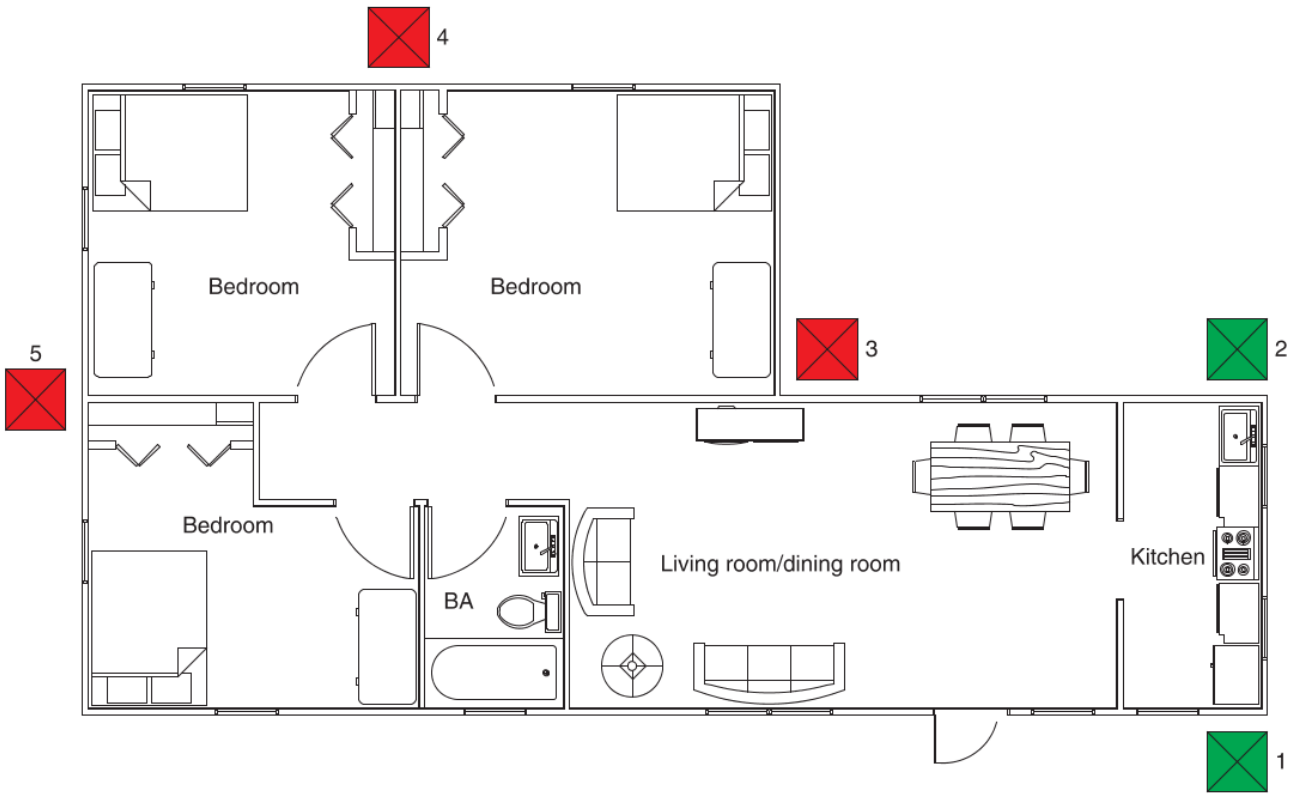

Goodheart-Willcox Publisher

Figure 32-15. Choose a location for an outdoor air-cooled condensing unit for best airflow and least noise. Locations 1 and 2 are good locations. Location 3 is not recommended because it is in a pocket where there would be restricted airflow and is also too near a bedroom. Locations 4 and 5 are also too near bedrooms.

chamber so the evaporator can be accessed for periodic cleaning and servicing as required.

A cutout is made in the plenum and covered with a cover plate. The cover plate is slightly larger than the cutout and is secured with sheet metal screws. The bottom of the coil assembly is secured and supported by blank-off plates and rails. ***Blank-off plates*** are sheet metal plates that support the evaporator coil and block off areas of the plenum so that all the air passing through the plenum is directed through the evaporator coil. **Figure 32-18** shows a typical slant evaporator installation.

In some cases, the metering device is supplied with the evaporator coil. If the metering device is not supplied with the coil, the proper size metering device must be selected and installed at the evaporator coil inlet.

The condensate drain should be piped to an open drain. There should be an air break at the drain. Plastic drainpipe should be kept away from the warmer parts of the furnace. Some technicians install a 4″ U-trap in the drain line to stop airflow through the line. A condensate drain pan is built into the evaporator, as is the drain connection.

Code Alert

Condensate Drainage

Check the local building code for condensate drainage requirements. In some installations, a drain pump must be installed to remove the condensate to the outdoors.

10

32.4.3 Installing Refrigerant Lines

The suction and liquid lines between the condensing unit and the evaporator coil may be connected with flared connections, brazed connections, or quick-connect couplings. The flared and brazed connections were discussed in Chapter 8, *Working with Tubing and Piping*. Quick-connect couplings were discussed earlier in this chapter.

Refrigerant lines should be kept as short as possible. The proper diameters for the refrigerant lines are determined by the size of the condensing unit and the length of the lines to connect the condensing unit to the evaporator. If the system is being installed in a hot, humid climate, the manufacturer may recommend

Copyright Goodheart-Willcox Co., Inc.

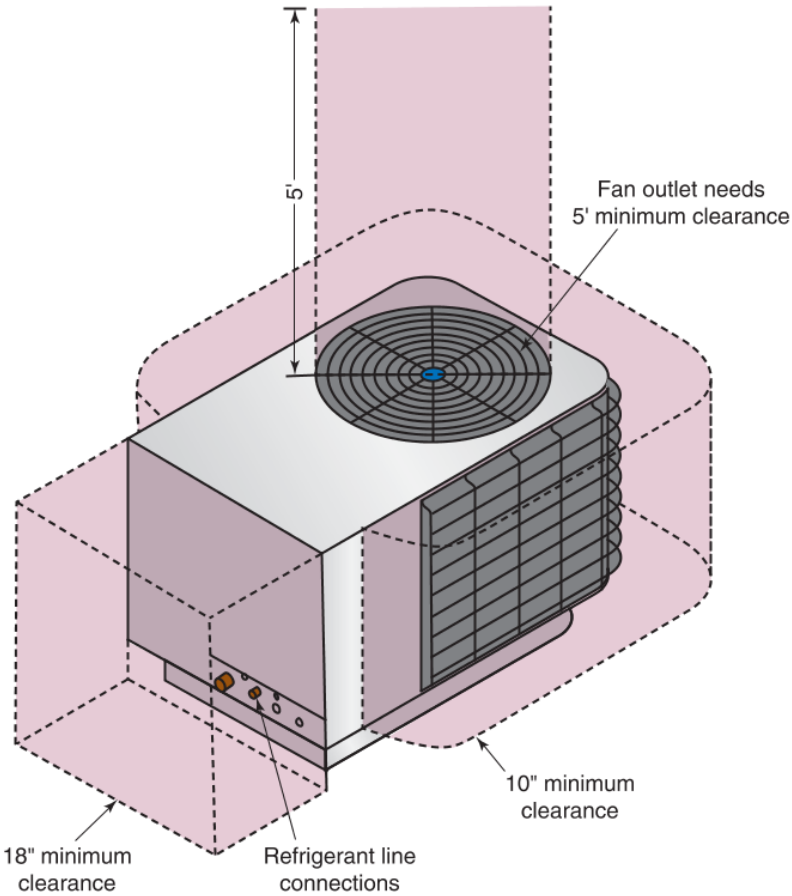

York International Corporation, Unitary Products Group

Figure 32-16. A typical condensing unit installation showing the minimum acceptable clearances around such units.

RectorSeal

Figure 32-17. These access valve locks on an outdoor condensing unit restrict access to its suction and liquid lines. The color pink corresponds to the cylinder color used for R-410A.

a larger-diameter than would be recommended for a more temperate climate. Always follow the manufacturer's sizing recommendations.

Caution

Brazing Refrigerant Lines

If the refrigerant lines are to be connected by brazing, remove the Schrader valve cores from the service valves before brazing the lines to the stubs. If the valve cores are not removed, heat from the brazing process will damage the rubber and plastic parts in the valve core. Also, wrap the service valves with a wet cloth before brazing the joints. This will protect the valves from overheating.

Many condensing units are installed at a higher elevation than the evaporator. Therefore, a U-bend should be put in the suction line to assist in oil return. The suction line should slope downward slightly toward the condensing unit. It should also be insulated. If the suction line is not insulated, moisture from the air will condense on the outside of the suction line and drip.

Copyright Goodheart-Willcox Co., Inc.

An uninsulated suction line would also absorb additional heat from unconditioned space, which will need to be rejected at the condenser. As a result, system efficiency will decrease, and the compressor will not be cooled as effectively.

A filter-drier and a sight glass should be put in the liquid line. The refrigerant lines should be supported and free of kinks and sharp bends. Any openings for the liquid and suction lines in the plenum and the building's wall should be sealed with weatherproof, nonhardening sealing compound and tape.

Caution

Liquid Line/Capillary Tube Installation

Some systems use the liquid line as the capillary tube. Larger-bore (ID) tubing reduces the chance of clogging from dirt or moisture. To ensure proper operation, do not shorten or lengthen a combination liquid line/capillary tube during installation.

Once refrigerant lines are installed, check the refrigerant lines and evaporator for leaks. Repair any leaks. Evacuate the refrigerant lines and evaporator. Next, charge the system with refrigerant. If the condensing unit is precharged, the isolation valves are opened and the charge is allowed to fill the system. If the condensing unit did not come precharged, the proper charge must be weighed in. General leak testing, evacuation, and charging procedures were described in Chapter 11, *Working with Refrigerants*. Always follow the manufacturer's recommendations.

32.4.4 Installing Electrical Wiring

The wiring requirements for central air-conditioning systems vary from system to system. The electrical installation must be completed as shown in the wiring diagram furnished with the system. The wiring requirements usually consist of providing a 240 V connection to power the condensing unit and a 24 V

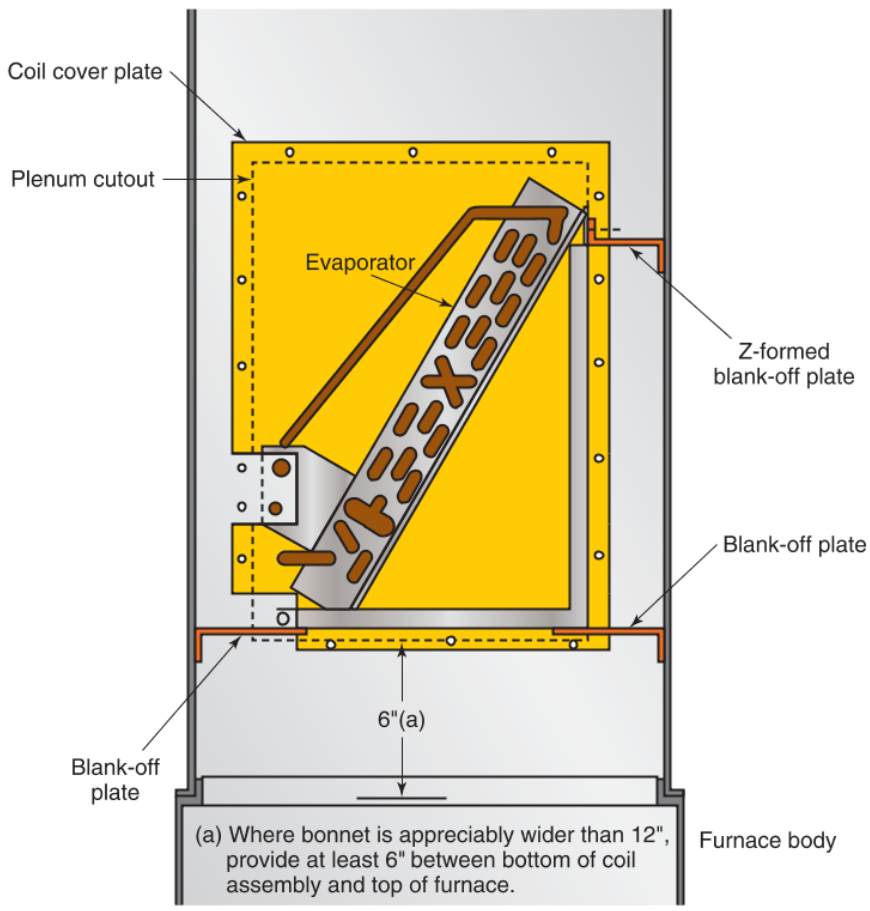

Goodheart-Willcox Publisher

Figure 32-18. A slant evaporator installed in a furnace plenum. The blank-off plates support the coil and direct all air through the evaporator coil.

Copyright Goodheart-Willcox Co., Inc.

connection from the thermostat to control the condensing unit. The 240 V circuit is equipped with an electrical disconnect so the system can be quickly disconnected for service, **Figure 32-19**.

Code Alert

Disconnecting Means

According to the National Electrical Code, a condensing unit's electrical disconnecting means must be within sight from the condensing unit's location and also readily accessible. *Within sight* means that the disconnect can be no more than 50′ away. *Readily accessible* means that personnel will not need to climb, use tools, or remove obstacles to reach the disconnect.

When installing wiring that is to be exposed to outdoors, check that its insulation is properly rated for such use. Outdoor use means that the wiring will be exposed to moisture from precipitation and also to the powerful rays of the sun. Not all wiring is intended to withstand such exposure.

Code Alert

Electrical Wiring

Electrical circuits must be installed in accordance with local building codes, which often specify that work be done in accordance with the National Electrical Code. Consult your local electrical utility concerning the primary service capacity.

Goodheart-Willcox Publisher

Figure 32-19. Electrical disconnect box. Note that the pullout contact can be pulled out or flipped upside down to disconnect the condensing unit so it can be serviced.

32.5 Inspecting Central Air-Conditioning Systems

The first step in inspecting and evaluating a central air-conditioning system is to write down the

Service Call Scenario

32A: Residential Central Air Conditioning—No Cooling

Customer Complaint: No Cooling

Possible Causes: Defective condenser fan motor, defective run capacitor, dirty condenser coil.

Description of Problem: The owner of a 2300 ft^2 residence, Mr. Andrews, has reported that his air conditioning is not providing cooling. Prior to arriving at the jobsite, the technician, Tim, reviews the work order. Upon arriving at the residence, he identifies himself to Mr. Andrews and listens carefully to his comments.

Testing: Tim places the wall thermostat to call for cooling. He then proceeds to install the gauge manifold to determine system pressures. While outdoors, he observes that the compressor is operating; however, the condenser fan is not. He then notes that the high-side pressure is extremely high and that the compressor is shutting off. With this in mind, Tim shuts off all electrical power to the unit. He then checks the condenser fan motor for resistance and records an infinite ohm reading. This indicates that the windings of the fan motor are open and that the fan must be replaced. Tim informs Mr. Andrews of the issues and offers solutions and costs. He agrees to have Tim perform the services.

Solution: With the electrical disconnect turned off, Tim disconnects the fan motor wiring from the contactor and the run capacitor. Next, he removes the fan blades from the condenser fan motor shaft. He then removes the motor. The new condenser fan is installed and motor rotation is checked. Tim initiates a start-up of the system and notes all operations are now restored to normal. The unit is now cooling. Tim provides Mr. Andrews with the bill and informs him that a follow-up call will occur.

Safety: Remember, when testing resistance, all checks must be performed with the power source off. When restoring the electrical source, keep a safe distance from all revolving equipment such as fan motors and fan blades.

Copyright Goodheart-Willcox Co., Inc.

system settings. There are basically ten steps that a technician will follow after writing down the system settings:

1. Check the ground surrounding the condensing unit for signs of erosion. Clear away any plants, shrubs, and branches from the outdoor part of the unit so there will be good airflow across the condenser coil.
2. Visually check both the front and back of the evaporator and condensing coils. Spray the coils with self-rinsing coil cleaner. An outdoor condensing coil can be cleaned and rinsed with clear water rather than the self-rinsing coil cleaner.
3. Disconnect the drain line near the evaporator. Use a wet-dry vacuum to remove any water or particles of dirt from the drain outlet. If the drain line is clogged or dirty, replace it with new clear plastic tubing. Reinstall the drain line.
4. Vacuum the drain pan. Place algaecide tablets in the pan. See **Figure 32-20**.
5. Visually check the condensing unit contact points for excessive burn. Any contactors that have been used will have a noticeable marking.
6. If the unit has auxiliary resistance heat, take a current draw measurement on each element with the heat turned on. Make sure the current draw is within the manufacturer's specification.

DiversiTech Corporation

Figure 32-20. Placing algaecide tablets in the condensate drain pan.

7. Disconnect and reconnect any time delays that have been installed. Check the starting time and verify that the unit is meeting the customer requirements for run time.

Service Call Scenario

32B: Residential Central Air Conditioning—No Cooling

Customer Complaint: No Cooling

Possible Causes: Dirty air filter, defective indoor fan motor, incorrect ductwork sizing.

Description of Problem: Mrs. Parker, the owner of an 1800 ft^2 residential home, has reported that her air-conditioning system is not cooling. Prior to arriving at the jobsite, the technician, Sean, reviews the work order. Upon arriving at the residence, he identifies himself to Mrs. Parker and listens carefully to her comments. He notes that the air conditioning unit is running. However, the thermostat indicates that it is set for 72°F, yet the temperature in the home is 81°F.

Testing: Sean sets the wall thermostat to a call for cooling. He visually observes the system's operation. Using his gauge manifold, he reads the system's pressures. Performing a temperature split, he takes the air supply and the return air temperatures and notes that the temperature split is higher than would normally be expected. The systems low-side pressure is lower than normal. Attempting to determine the cause for this malfunction, Sean inspects the evaporator coil and notices that the coil has a thin layer of ice on it. He then inspects the air filter and notes that the air filter is completely covered with dirt and debris. He informs Mrs. Parker of the issues and offers solutions and the costs for such. She agrees to have Sean perform the services.

Solution: A new air filter is installed, and the evaporator is thawed. To prevent the possibility of further airflow problems, Sean cleans the evaporator with a biodegradable coil cleaning solution. He next inspects the condition of the indoor blower motor for cleanliness and ensures good operation. He again checks the temperature split. All pressures and temperatures have returned to normal. The unit is now cooling. He cleans the work area prior to leaving, as the cleaning solutions can leave residue and slippery conditions. Sean educates the owner as to how to install air filters correctly with the arrow facing the furnace in the direction of the return airflow. He provides Mrs. Parker with the bill and informs her that a follow-up call will occur.

Safety: Always follow manufacturer's procedures when using any chemical solutions. Remember to wear protective devices such as safety glasses and protective gloves.

Copyright Goodheart-Willcox Co., Inc.

8. Measure and record the air temperature differential between the evaporator inlet and outlet. It should be between 16°F (9°C) and 20°F (11°C).
9. Visually check the ducts for leaks. Check for open joints and broken diverters. Repair all leaks with mastic.
10. Return the system and its devices to the original settings noted before the inspection.

32.6 Servicing Central Air-Conditioning Systems

Economical operation and system dependability are based on proper servicing. The basic servicing and troubleshooting procedures for central air-conditioning systems are similar in many ways to those for servicing and troubleshooting small domestic appliances.

There are several possible causes of comfort cooling–related service calls:

- No cooling or insufficient cooling.
- Indoor air too humid.
- Air in building is stuffy (stale).
- Excessive (indoor or outdoor) noise.
- High cost of operation.
- System will not start.

Begin a service call by checking the general condition of the system. Check for leaks, proper refrigerant charge, and malfunctioning refrigerant controls and motor controls. Check also for moisture in the system. Moisture in the refrigerant can form ice in the metering device, resulting in a gradual decrease in performance as the system operates.

Often the same blower, filter, and duct system are used during both the cooling and heating seasons. It is essential that the blower be cleaned at least once a year. The motor should be lubricated (a few drops of SAE 30 oil) once or twice a year, if applicable. Air filters should be inspected monthly and cleaned or replaced as needed. The blower's motor speed is often faster (high) for summer comfort cooling and slower (low) for winter heating. Belts on belt-driven blowers should be inspected and replaced if glazed or cracked.

A condensing unit should be cleaned once a year. The condenser, especially, should be blown clean of debris. Any bent fins should be straightened. A carbon dioxide blower or vacuum cleaner can be used to clean the unit. Pressurized washing wands are useful to clean the coils from the inside out, **Figure 32-21**.

Evaporator coils should also be cleaned of any lint and have any bent fins straightened. Check condensate drainage. Condensate that escapes the drain pan may drip on the furnace heat exchanger, corroding (rusting) it. If the condensate drain is clogged, it may be possible to blow out the blockage using compressed gas, **Figure 32-22**.

Service Call Scenario

32C: Residential Central Air Conditioning—No Cooling

Customer Complaint: No Cooling

Possible Causes: Open fuses, defective circuit breakers, thermostat, defective contactor coil.

Description of Problem: A homeowner, Ms. Sellers, has reported that her air conditioner is not cooling. Prior to arriving at the jobsite, the technician, Brad, reviews the work order. Upon arriving at the residence, he identifies himself to Ms. Sellers and listens carefully to her comments.

Testing: Brad places the thermostat on a call for cooling. He walks to the outdoor unit and installs his gauge manifold to read the system's pressures. He notices that the outdoor unit is not turning on. Brad performs a voltage check at the contactor coil. His voltmeter registers 24 volts at the coil. Next, he isolates the contactor coil and measures the resistance. The reading is infinite ohms. This indicates the coil is opened and needs to be replaced. Brad informs Ms. Sellers of the need to replace the contactor and the cost. She agrees to have him perform the service.

Solution: Brad shuts off the electrical power to the unit. Next, he disconnects the wiring to the contactor. He removes the bad contactor. A new contactor is installed and the system is started. The system starts and operates satisfactorily. The unit is now cooling. Brad then provides Ms. Sellers with the bill and informs her that a follow-up call will occur.

Safety: Air-conditioning units operate under high voltages. Always use care when connecting and disconnecting electrical wiring.

Copyright Goodheart-Willcox Co., Inc.

Service Call Scenario

32D: Residential Central Air Conditioning—No Cooling

Customer Complaint: No Cooling

Possible Causes: Severed thermostat cable, defective transformer, open high-side pressure switch, defective thermostat.

Description of Problem: A homeowner, Mr. Richards, has reported that his air-conditioning system is not cooling. Prior to arriving at the home, the technician, Kyle, reviews the work order. Upon arriving at the residence, he identifies himself to Mr. Richards and listens carefully to his comments.

Testing: Kyle initiates cooling using the wall thermostat. He notes that the furnace indoor blower motor has started. The starting of the indoor blower motor assures him that source voltage and low voltage are present at the furnace. He walks outside to observe the outdoor unit. The unit is not in operation. While removing the unit's electrical cover, he notices that the two-strand thermostat cable has been severed and the connection to the contactor coil is broken. Kyle notifies Mr. Richards of the situation and recommends that a new two-strand cable be installed.

Solution: Kyle installs new cable and makes all of the electrical connections to the contactor. He checks the contactor for proper operation. The contactor coil is energized and the unit starts. All pressures are checked and all are in the correct range. The system is now cooling. Kyle provides Mr. Richards with the bill and informs him that a follow-up call will occur.

Safety: Remember, high and low voltages are needed to operate most heating and air-conditioning equipment. Under the right conditions, low voltage can become fatal. Always follow safety precautions when working with live circuits.

SpeedClean

Figure 32-21. This technician is using a pressurized mix of chemicals and water flowing outward through the condenser coils.

DiversiTech Corporation

Figure 32-22. This drain cleaning gun blows away drain blockages using dry, compressed carbon dioxide.

10

Copyright Goodheart-Willcox Co., Inc.

The best and most thorough way to clean an evaporator coil with clogged cooling fins is to remove it from the system for cleaning. This requires the refrigerant charge to be recovered or pumped down into the high side. All refrigerant should be removed from the evaporator before removing the coil. Plug all system refrigerant connections once opened. Then, either steam-clean or use hot water and detergent to scrub the fins and tubes. Steam is the best cleaner, although high-pressure warm water and detergent also work well.

Pro Tip

Preventing Evaporator Icing

Instruct occupants not to adjust their thermostat too low for summer cooling. The evaporator may freeze the condensate. This will restrict airflow through the evaporator, resulting in even more ice buildup.

Inspect all ductwork for leaks and broken dampers. Make sure that all supply ducts and returns are not obstructed and that sufficient airflow is observed. If ducts have dirt and dust buildup, semiannual duct cleaning may be needed. Duct cleaning should include sanitizing of all lines and a thorough inspection of all trunk lines, supply, and return ducts.

Always record and mark the date on the furnace or condensing unit when service has been performed. Record refrigerant charge, suction, and head pressure if the refrigerant system has been accessed.

Thinking Green

Flushing a System

An HVAC system's refrigerant circuit must be flushed in the case of a hermetic compressor motor burnout or if the system is being retrofitted for another refrigerant and the existing line set is going to be reused. In the past, an R-11 flush was commonly used to clean such a system. Today, alternative flushing agents are available.

32.7 Variable Refrigerant Flow (VRF) Systems

Split system, forced-air heat pumps use one outdoor condensing unit connected to an indoor coil mounted in an air handler. Conditioned air is then blown to each room via ductwork. Multizone ductless split systems utilize an outdoor condensing unit with refrigerant tubing to each indoor coil. The amount of refrigerant tubing used in a multi-split system can be extensive. Variable refrigerant flow systems use one outdoor unit and a single set of refrigerant tubes that connect each indoor coil in parallel. This greatly reduces the amount of tubing required. **Figure 32-23** illustrates a multizone ductless split system and a variable refrigerant flow (VRF) ductless split system.

During a normal heating or cooling season, the average ambient temperature is approximately 70% of the load for which a system is designed. Traditional

Service Call Scenario

32E: Residential Central Air Conditioning—No Cooling

Customer Complaint: No Cooling

Possible Causes: Low charge, leaks in system.

Description of Problem: Mr. Temrowski, the owner of a 2500 ft^2 home, has reported that the air conditioner is not cooling. Prior to arriving at the jobsite, the technician, Sharon, reviews the work order. Upon arriving at the home, Sharon identifies herself to Mr. Temrowski and listens carefully to his comments.

Testing: Sharon installs her gauge manifold to read the system's pressures. The low-side gauge is reading lower than normal pressures. She performs a superheat reading and it indicates a high superheat. It appears the evaporator is being starved of refrigerant. Therefore, Sharon inspects the evaporator. She notes that the sensing bulb of the TXV metering device has lost its charge. This is causing the TXV to close, resulting in the stoppage of refrigerant flow to the evaporator.

Solution: Sharon first recovers the refrigerant. She removes the defective TXV and installs a new valve. Since she has opened the unit, she must install a new liquid line filter-drier to protect the system from contaminants and moisture. Sharon starts the system and confirms all pressures and temperatures have returned to normal. The system is now cooling. Sharon provides Mr. Temrowski with the bill and informs him that a follow-up call will occur.

Safety: Remember, when you are opening a system to replace components, be sure to check the conditions of the system's oil for signs of contaminants. Wear eye and hand protection—some system lubricants may be toxic and acidic. Wear the same protective equipment when charging refrigerants.

Copyright Goodheart-Willcox Co., Inc.

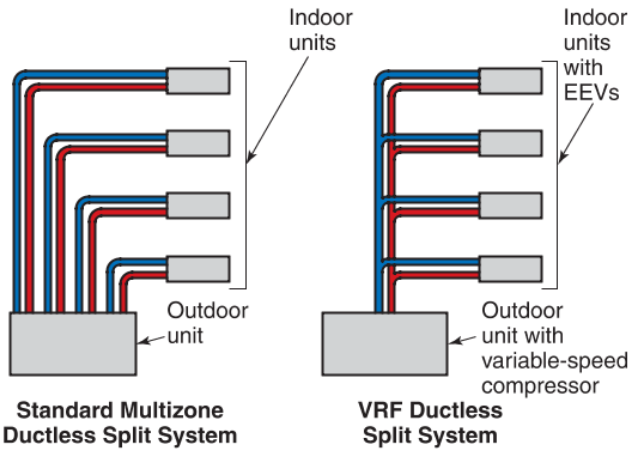

Goodheart-Willcox Publisher

Figure 32-23. Comparison of a standard ductless split system and a VRF system. A standard multizone split system has separate refrigerant lines between each indoor coil and the outdoor unit. A variable refrigerant flow (VRF) system uses a main line set that includes a suction line trunk and a liquid line trunk. Parallel refrigerant lines for each indoor coil branch off from the main line set.

air-conditioning systems use a fixed-speed compressor, fixed-speed blower motor, and a TXV or orifice metering device. Components with a fixed speed or capacity always operate at the maximum design rate. Conditioned space temperature is maintained by cycling the system on and off with fixed components operating at maximum. The efficiency of a system can be greatly improved if compressor speed is reduced to modulate the refrigerant flow to match the heating or cooling load. This type of operation is known as variable refrigerant flow (VRF). It is also referred to as variable refrigerant volume (VRV). Many VRF systems are charged with R-410A. Variable refrigerant flow (VRF) systems use the following components to regulate refrigerant flow and airflow:

- Inverter-driven variable-speed compressor.
- Variable-speed indoor and outdoor fan motors.
- Electronic expansion valve (EEV).

The benefits of VRF systems is that they are able to maintain each room set point more efficiently than a standard HVAC system by distributing the exact amount of refrigerant necessary and only to the zones that are calling for heating or cooling. Each zone has its own temperature control and variable-speed fan that precisely control the climate of their conditioned space. Indoor units may be floor-mounted, wall-mounted, ceiling-mounted, or placed in ductwork where applicable. **Figure 32-24** shows a typical residential VRF outdoor coil and several types of indoor coils.

One disadvantage of VRF systems is that they do not regulate humidity or outside air changes. Ventilation and humidity control can be added to VRF systems by adding ductwork, humidifiers, and an air handler.

32.7.1 Inverter-Driven Compressors

Most compressors are fixed speed. They operate using single-phase or three-phase alternating current (ac) as their power source. Rather than using line voltage, a variable-speed compressor has an inverter supply its electrical signal. An inverter varies the frequency of the voltage supplied to a compressor's motor. Remember that ac motor speed is based on two factors:

- Number of poles in the motor.
- Frequency of the voltage signal.

Many inverters provide compressors with a voltage signal that can have a range of frequency values. By reducing or increasing the frequency, the speed at which the motor rotates is reduced or increased. The slower a compressor's motor turns, the less refrigerant it pumps. The faster a compressor's motor turns, the more refrigerant it pumps. By varying the frequency, an inverter varies the refrigerant flow through the system.

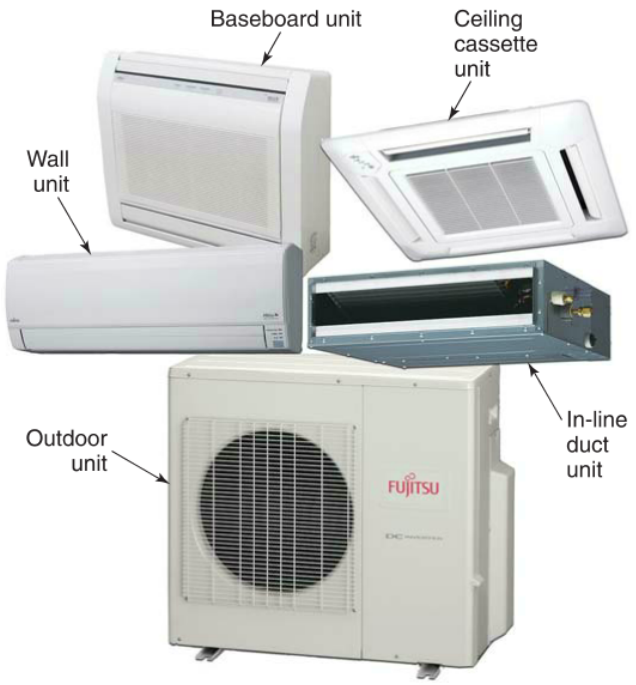

Fujitsu General America, Inc.

Figure 32-24. Residential VRF system with various indoor units above and outdoor unit below.

Copyright Goodheart-Willcox Co., Inc.

Single-phase line voltage passes through a bridge rectifier to create a modified direct current signal. This voltage is then passed through capacitors resulting in a smooth, straight dc signal. This dc voltage can be used to power dc components, such as an electronic expansion valve (EEV), certain fan motors, and control circuitry, **Figure 32-25**.

An inverter passes the dc signal through six switches that are operating multiple times per second. This produces a three-phase signal. This three-phase ac signal then passes through a frequency drive that controls the frequency of the signal. Remember that single-speed compressors operate at one speed because the frequency of their power is a constant 60 cycles per second. An inverter can change a signal's frequency down to 30 cycles per second and up through 310 cycles per second to slow or speed the compressor. Frequency determines motor speed, **Figure 32-26**.

A traditional single-speed compressor is either on or off (operating at 0% or 100%), but a variable-speed compressor can operate as low as 10% of rated speed and up through 100%. Variable-speed compressors have a minimum speed below which they do not operate. Keeping operation above the minimum speed ensures that refrigerant and oil are circulated back to the compressor to maintain cooling and lubrication.

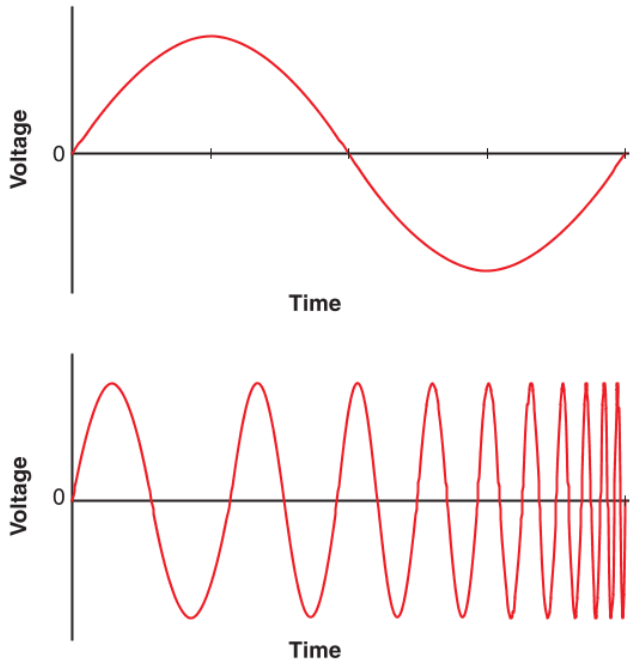

Goodheart-Willcox Publisher

Figure 32-26. Single-speed and variable frequency signals graphed. Top—Standard sine wave for single-speed operation. Bottom—A variable frequency that gradually increases for faster compressor operation.

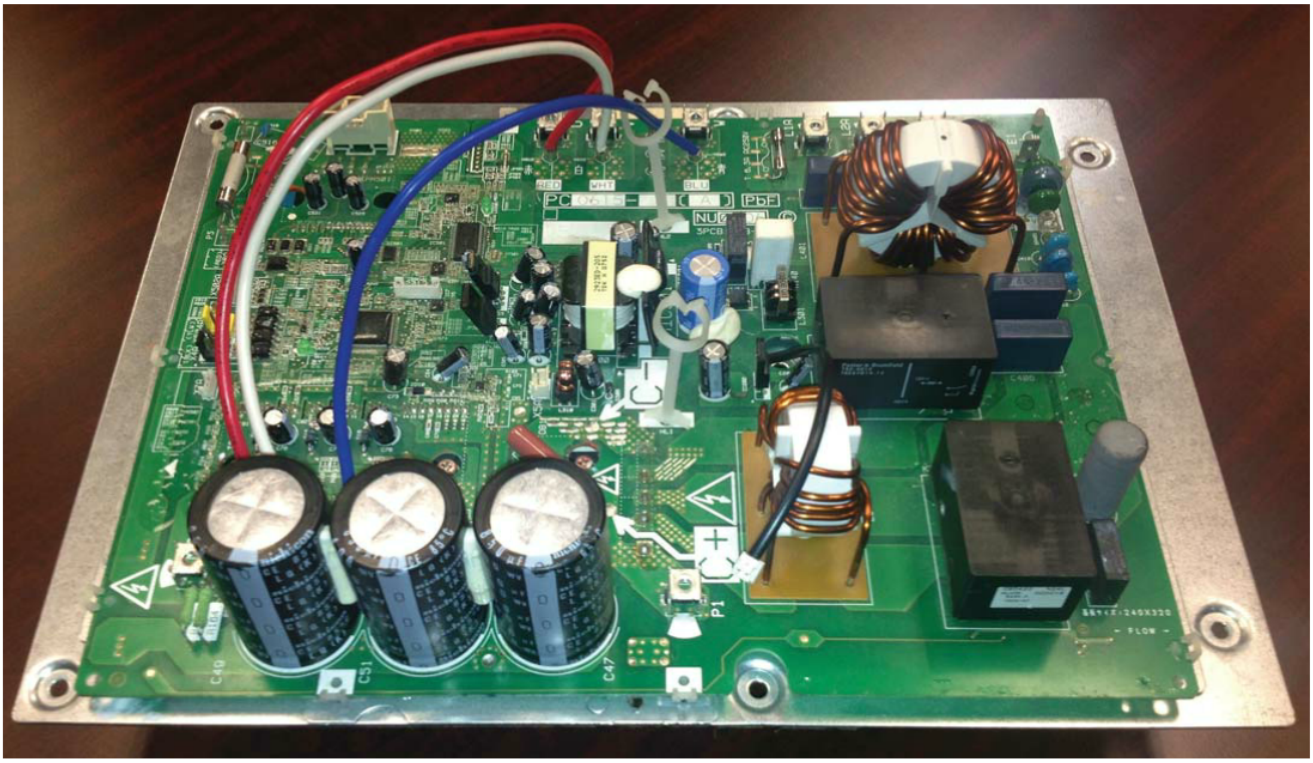

Daikin Applied

Figure 32-25. An inverter's circuitry is often on a printed circuit board (PCB).

Copyright Goodheart-Willcox Co., Inc.

An inverter can be used to produce a low-frequency signal to a compressor for slow start-up or a soft start. This low frequency produces less initial starting torque compared to the frequency and voltage applied to a single-speed compressor. Beginning start up at a low frequency saves energy. Inverter control can be applied to different builds of compressors, such as rotary, scroll, reciprocating, and centrifugal.

32.7.2 Residential VRF Systems

Variable refrigerant flow (VRF) systems may be used in residential applications to provide precise temperature control of various rooms throughout a home. The outdoor coil and compressor assembly supply refrigerant to indoor coils in each room of the house. Most VRF systems are heat pump units with the reversing valve mounted in the outdoor coil. Each indoor unit contains a refrigerant coil, an electronic expansion valve (EEV), a coil thermistor, and a room thermistor.

Each indoor unit operates a separate zone under a different load. The inverter-driven compressor speeds or slows to supply the capacity needed in each zone. The amount of refrigerant and its flow rate is regulated to each zone by each unit's EEV.

The refrigerant tubing for each zone may be branched off from the main line set using a ***Y tube*** or branch tube. Each indoor coil is branched off in parallel from the main trunk line.

Each zone in a VRF system has its own temperature and blower control. The control can either be wall mounted or a wireless remote control. VRF systems are able to tightly control temperature within a zone by using a controller inside each indoor unit.

Each indoor unit controller monitors room set point, fan speed, and also air direction through the use of oscillating louvers. The use of a variable-speed compressor in the outdoor unit and variable-speed fan motors in the indoor units allows for a wide range of capacity control. By lowering capacity, a compressor can run longer and avoid continuously cycling on and off. Fans can be operated at their minimum speed to maintain a constant level of comfort. On these lower settings, VRF systems are known to operate very quietly relative to other types of systems.

Service Call Scenario

32F: Residential Air Conditioning—Lack of Cooling

Customer Complaint: Lack of cooling

Possible Causes: Dirty condenser coil resulting in restricted airflow, overcharged unit, faulty compressor, faulty fan motor, bent fan blade.

Description of Problem: Mr. Rodriguez, the owner of a 2000 ft^2 residence, has reported that the air conditioner is not cooling. The unit runs for a short period and then shuts down. Prior to arriving at the jobsite, the technician, Juan, reviews the work order. Upon arriving at the home, he identifies himself to Mr. Rodriguez and listens carefully to his comments.

Testing: Juan places the wall thermostat on a call for cooling. He goes outdoors to observe the unit. Juan installs his gauge manifold to read the system's pressures. A very high high-side pressure is indicated. While observing the unit, Juan notes that the condenser coil is extremely dirty—covered with leaves and grass clippings. He knows that a dirty condenser results in restricted airflow, which increases high-side pressure, resulting in the unit shutting off on internal overload. Juan waits momentarily and soon the compressor shuts off. When the unit was operating, the temperature split across the condenser was quite high. Juan informs Mr. Rodriguez of the situation. Juan recommends that the condenser coil be cleaned and indicates the cost for such. He also suggests that Mr. Rodriguez trim back the trees in this area and ensure grass clippings are blown away from the area. Mr. Rodriguez agrees to have Juan perform the needed service.

Solution: Juan thoroughly cleans the condenser coil with a coil-cleaning solution. He starts the unit and checks the system's pressures. The high-side pressure is now in the normal operating range and the unit is now running without shutting down on overload. Juan reviews with Mr. Rodriguez the importance of maintenance and the importance of keeping debris away from the compressor. He provides Mr. Rodriguez with the bill and informs him that a follow-up call will occur.

Safety: Be cautious when working with a compressor operating with extreme high-side pressures. The compressor temperature and the discharge line will become extremely hot and can cause serious burns. Use caution as a fracture may release highly pressurized refrigerant and oil. Always wear proper eye and hand protection!

Copyright Goodheart-Willcox Co., Inc.

Chapter Review

Summary

- Central air conditioning refers to a centrally located system that is capable of providing heating, cooling, and humidity control to multiple spaces. The conditioned air is typically routed to the desired spaces through a network of air ducts.
- A single combination heating and cooling thermostat is often used in central air-conditioning systems. In some systems, a humidistat controls the relative humidity in the conditioned space.
- Unitary central air-conditioning systems are manufactured complete and ready for assembly. In field-erected air-conditioning systems, all components are purchased separately and assembled on-site.
- A split system has its condensing unit outdoors and its evaporator indoors.
- Comfort cooling systems are equipped with operating controls and safety controls. Operating controls, such as thermostats, pressure switches, humidistats, motor starters, and relays, regulate the normal operation of the system. Safety controls monitor conditions and shut off the system or specific components to protect system components and building occupants.
- Installing central cooling onto an existing furnace is done in four steps: installing the condensing unit, mounting the evaporator, installing the refrigerant lines, and making the electrical connections.
- Servicing a central air-conditioning system begins with a check of the system's general condition. During this inspection, check for leaks, malfunctioning controls, and moisture-related problems. Fans and motors should be cleaned and lubricated, worn belts should be replaced, and the condenser and evaporator coils should be cleaned. Record any service work in company records and system records for the home owner.
- Variable refrigerant flow (VRF) technology has been incorporated into some residential air-conditioning systems. This is primarily in multizone ductless split systems. A single outdoor unit controls the amount of refrigerant that flows to multiple indoor units throughout a building. Indoor units are connected in parallel using Y tubes to branch off the main line set.
- A VRF system matches system operation to the heat load capacity using electronic expansion valves in each indoor unit, variable-speed motors in outdoor and indoor units, and an inverter-driven, variable-speed compressor. These features respond to the temperature controls in each indoor unit so they control a different zone in a building.
- An inverter takes line voltage and modifies the electrical signal to vary its frequency. By reducing or increasing an electrical signal's frequency, an inverter can reduce or increase motor speed. This determines how much refrigerant is pumped by the compressor.

Review Questions

Answer the following questions using the information in this chapter.

1. A standard split system that provides central air-conditioning includes which one of the following system components?
   A. An air handler.
   B. A chiller water pump.
   C. An inverter.
   D. A Y tube.
2. Which of the following best describes a field-erected air-conditioning system?
   A. All parts of the system are bundled together by the manufacturer, but assembled on-site.
   B. The parts of the system are purchased separately and then assembled on-site.
   C. The system is preassembled by the manufacturer, and installation requires only electrical connections.
   D. The system is constructed in the middle of a field.
3. Which of the following statements regarding split systems is *not* true?
   A. The air handler, furnace, and evaporator coil are installed indoors and the condensing unit is installed outdoors.
   B. An evaporator coil can be installed in the supply plenum of a forced-air heating system in order to add cooling capability.
   C. In a split system, the supply and return ductwork must pass through the building's exterior wall.
   D. All of the above.

Copyright Goodheart-Willcox Co., Inc.

4. An air-cooled condensing unit should be installed _____.
   A. beside a building along an inside corner with two outer walls no more than 3″ away
   B. beyond a building's roof overhang and eaves
   C. inside a well-insulated and unventilated room within a building
   D. tightly surrounded on all sides by tall, thick bushes
5. The purpose of blank-off plates is to _____.
   A. block the evaporator so air does not pass through when the furnace is operating
   B. block off areas of the plenum so all the air passes through the evaporator
   C. prevent airflow-related noises in the ductwork
   D. provide access to the evaporator for service
6. Which of the following statements regarding refrigerant lines is *not* true?
   A. A liquid line should be insulated to prevent condensation.
   B. Refrigerant lines may be connected with flare connections.
   C. Refrigerant lines should be kept as short as possible.
   D. All of the above.
7. The electrical connections to a central air-conditioning condensing unit typically include a 240 V connection for powering the compressor and a _____ connection for control.
   A. 24 V
   B. 36 V
   C. 100 V
   D. 480 V
8. The best and most thorough way to clean an evaporator coil with clogged cooling fins is to _____.
   A. leave the coil in the plenum chamber and spray it with a mild acid solution to dissolve the dirt
   B. leave the coil in the plenum chamber and rap on it with a ball peen hammer to dislodge blockages
   C. remove the coil from the plenum chamber and soak it in vinegar
   D. remove the coil from the plenum chamber and steam clean it
9. An inverter controls a variable-speed compressor by changing the electrical signal's _____.
   A. amps
   B. frequency
   C. poles
   D. voltage
10. Refrigerant flow through indoor units of VRF systems is typically controlled by a(n) _____.
   A. automatic expansion valve
   B. capillary tube
   C. electronic expansion valve
   D. low-side float valve

Copyright Goodheart-Willcox Co., Inc.

CHAPTER 33 Commercial Air-Conditioning Systems

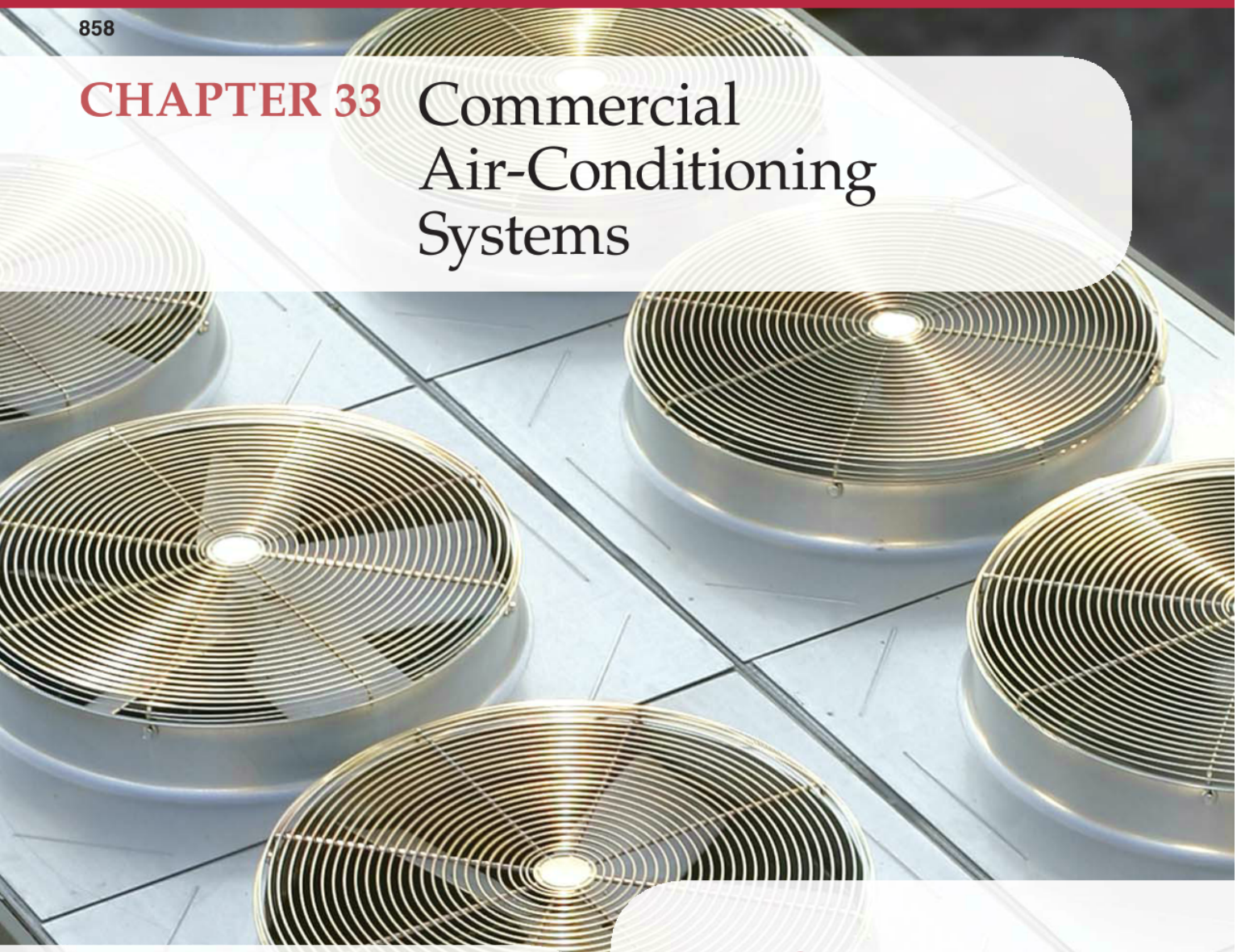

Chapter Outline

33.1 Rooftop and Outdoor Units
- 33.1.1 RTU Heating System
- 33.1.2 RTU Air Circulation
- 33.1.3 Comfort Cooling Controls
- 33.1.4 Installing Rooftop Units
- 33.1.5 Servicing Rooftop Units Safely
- 33.1.6 Variable Refrigerant Flow (VRF) Systems

33.2 Chillers
- 33.2.1 High-Pressure Compression Chillers
- 33.2.2 Low-Pressure Compression Chillers
- 33.2.3 Chiller Compressors

33.3 Cooling Towers
- 33.3.1 Cooling Tower Construction
- 33.3.2 Cooling Tower Operational Considerations
- 33.3.3 Water Valves

Learning Objectives

Information in this chapter will enable you to:

- Summarize the features of rooftop units and packaged outdoor air-conditioning units.
- Identify the types of controls commonly used in commercial air-conditioning systems.
- Explain how variable refrigerant flow is incorporated into commercial air-conditioning applications.
- Explain the basic operation of a chiller system.
- Compare the different types of compressors that can be used in chiller systems.
- Explain the basic function and operation of a cooling tower.
- Understand the operation and purpose of the different types of water valves used with water-cooled condensers and cooling towers in commercial air-conditioning systems.

Technical Terms

air-side economizer
basin heater
blowdown
chiller
closed-loop cooling tower
compression chiller economizer
cooling tower
counterflow cooling tower
crossflow cooling tower
cylinder unloading
direct-expansion evaporator
drift
enthalpy control
fill
forced-draft cooling tower
gravity flow basin
high-pressure chiller
induced-draft cooling tower
low-pressure chiller
makeup water
motor water valve
natural-draft cooling tower
open-loop cooling tower
packaged outdoor air-conditioning unit
pneumatic motor
pneumatics
pressure water valve
pressured water system
primary refrigerant
purge unit
rooftop unit (RTU)
secondary refrigerant
solenoid water valve
thermostatic water valve
water valve
wet decks

Review of Key Concepts

Reviewing these concepts from earlier chapters will help you understand new concepts presented in this chapter:

- A split air-conditioning system divides up its components into two or more separate locations. A split system's condensing unit may be placed outdoors, and its evaporating unit may be placed indoors. (Chapter 31)
- Variable refrigerant flow (VRF) units may be used to operate multiple temperature zones throughout a building. (Chapter 31)
- Many compressors use unloaders to reduce their load during start-up or to modulate compressor's capacity. (Chapter 18)
- Two methods for determining a refrigeration system's charge are checking the system's subcooling or superheat. Systems using a TXV should be checked using subcooling. Systems using a fixed orifice metering device should be checked using superheat. (Chapter 11)
- Active recovery processes use a recovery machine to remove refrigerant from a system in either vapor or liquid form. (Chapter 11)
- After any internal component is replaced, a refrigeration system must be evacuated and recharged. (Chapter 11)

Introduction

Commercial air conditioning differs from residential air conditioning in several ways. A commercial conditioned space is generally larger than a residential conditioned space. This does not just mean more square footage. It may also mean having a higher ceiling. Compare the height of a home's kitchen ceiling to that of a department store ceiling. This increase of square footage and having a higher ceiling can equate to a very large volume of conditioned space.

Another major difference is how a building is used and accessed. A busy store or supermarket may have people going in and out frequently. This opening and closing of doors can mean much more heat and humidity entering a building than a residence that is accessed many fewer times throughout a day. This results in an increase of sensible and latent heat that must be removed.

The amount of heat in Btu that must be moved is generally more in commercial than in residential. Because of these two differences, commercial air conditioning may employ different methods of transferring heat, such as using chillers.

Much of commercial air conditioning uses forced-air systems. The benefit of using forced-air is that ventilation needs can also be addressed within the same system. Chillers often have greater potential for heat absorption, but they do not always have ventilation capabilities. These may need to be incorporated using other components.

33.1 Rooftop and Outdoor Units

Rooftop units (RTUs) are packaged air-conditioning systems designed specifically to be installed on the roof of a building. Rooftop units are often designed to provide both cooling and heating. However, some may be built to provide only one of these features. They also often feature fresh air inlet options to help maintain indoor air quality. Distribution of conditioned air is done through a blower within the RTU. **Figure 33-1** shows how a rooftop system is connected to a duct distribution system.

Packaged outdoor air-conditioning units are similar to rooftop units in construction and operation. However, instead of being installed on the roof of a building, they are installed on a concrete pad or supporting structure adjacent to the building. Supply and return ductwork and wiring run through the exterior wall of the building, **Figure 33-2**.

The RTU design was first developed for flat-roofed commercial structures, such as supermarkets and office buildings. RTUs are convenient because they are factory-assembled and tested. They are also easily installed once hoisted to the site.

Installation of commercial rooftop units often requires a rigging company to hoist the unit to the rooftop. Heavy lift helicopters are sometimes used in cases where access to the rooftop is restricted. However, large cranes are more frequently used, depending on access and the height of the building, **Figure 33-3**.

Although RTUs are relatively easy to install and do not take up valuable interior space in a building, they do have certain requirements and specifications that should be thoroughly considered.

- The roof must be strong enough to uphold the weight of the unit.
- Openings in the roof, on which the units are mounted, could develop leaks over time.
- Units must be designed for ease of service even in severe weather.
- Weather, including strong winds, can affect their operation.
- RTUs require technicians to carry tools and supplies up to the roof.
- The equipment used to service these systems must function properly in all kinds of weather (for RTUs that provide both cooling and heating).

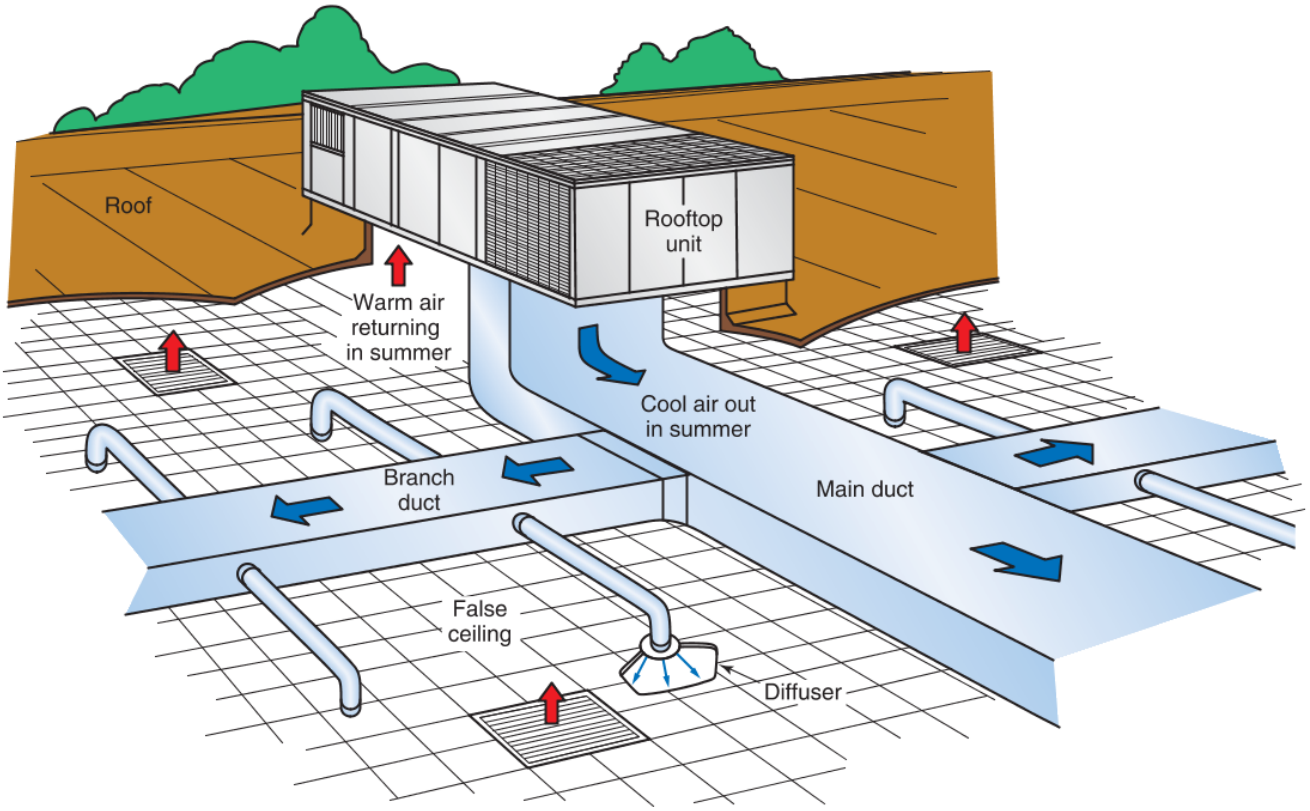

Lennox Industries Inc.

Figure 33-1. Rooftop unit (RTU) connected to duct system.

Copyright Goodheart-Willcox Co., Inc.

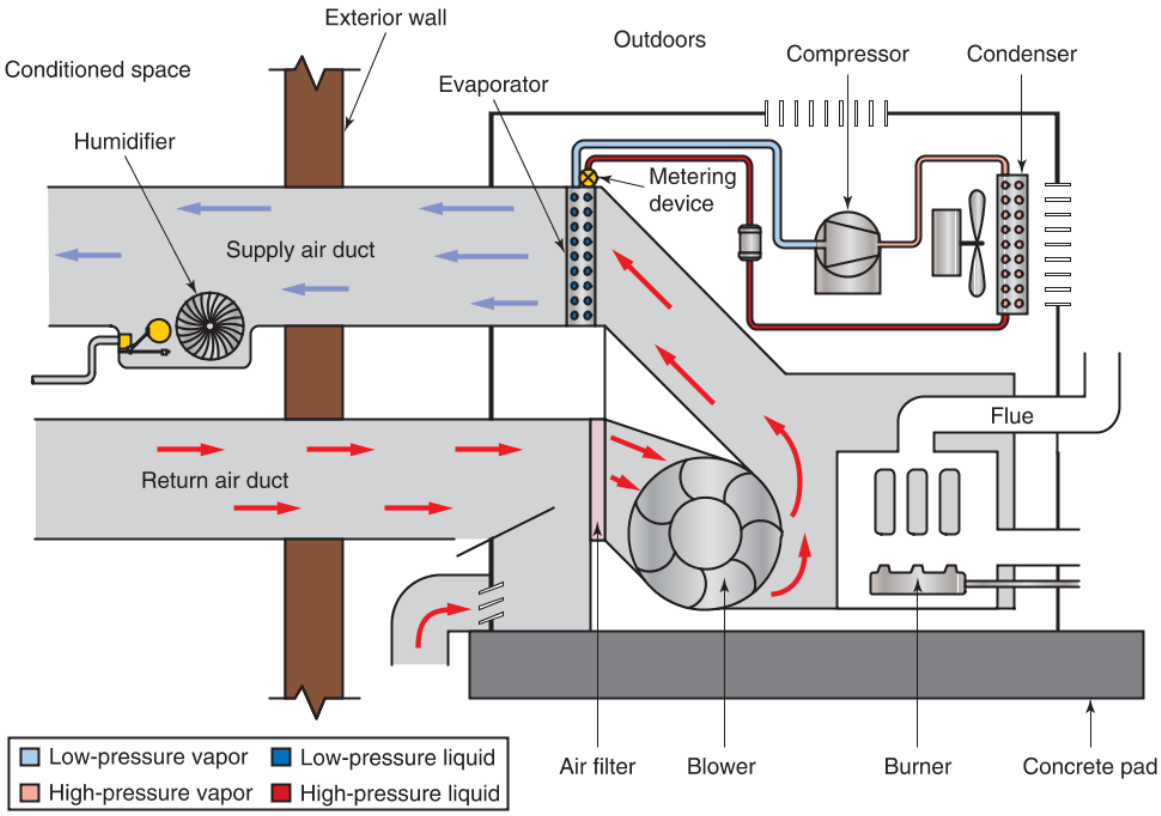

Goodheart-Willcox Publisher

Figure 33-2. Airflow through an outdoor unit.

Many RTUs come completely equipped with factory-installed heating units. Heat can be produced by an integrated gas-fired furnace, oil-fired furnace, or electric resistance heating elements. **Figure 33-4** shows a typical rooftop unit used for both heating and cooling.

Goodheart-Willcox Publisher

Figure 33-3. These RTUs are being lifted from a flatbed truck and set on the roof of an office building using a crane.

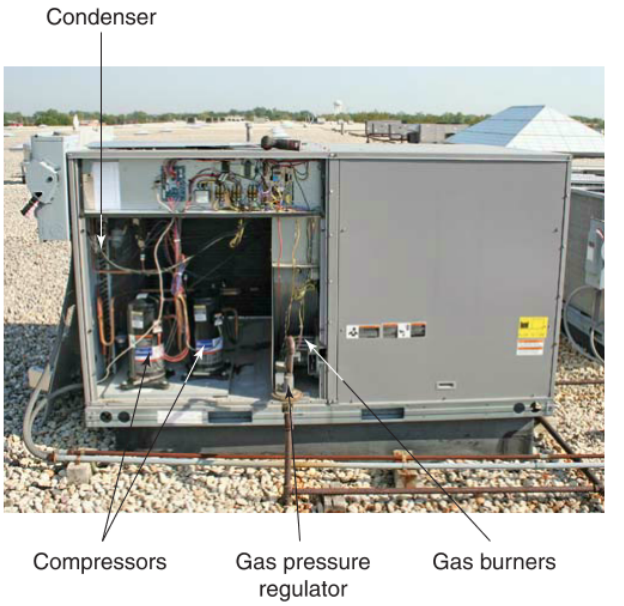

Goodheart-Willcox Publisher

Figure 33-4. This rooftop unit provides both heating and cooling. It has a gas-fired furnace. The side access panel has been removed for service.

Copyright Goodheart-Willcox Co., Inc.

Rooftop units are designed to be weatherproof since they are exposed to all kinds of weather. Access doors for inspection are designed to open and then stay open safely under high wind conditions. **Figure 33-5** shows a rooftop unit with all the access doors open to reveal the various components in the system.

33.1.1 RTU Heating System

Many rooftop units are equipped with gas-fired furnaces. Like a standard gas-fired furnace, RTUs are equipped with an electric ignition system. The heat exchanger of an RTU with a gas-fired furnace typically can be reached through an access door or panel, **Figure 33-6**.

Goodheart-Willcox Publisher

Figure 33-6. An access panel has been removed from this rooftop unit to reveal the gas-fired furnace's heat exchanger.

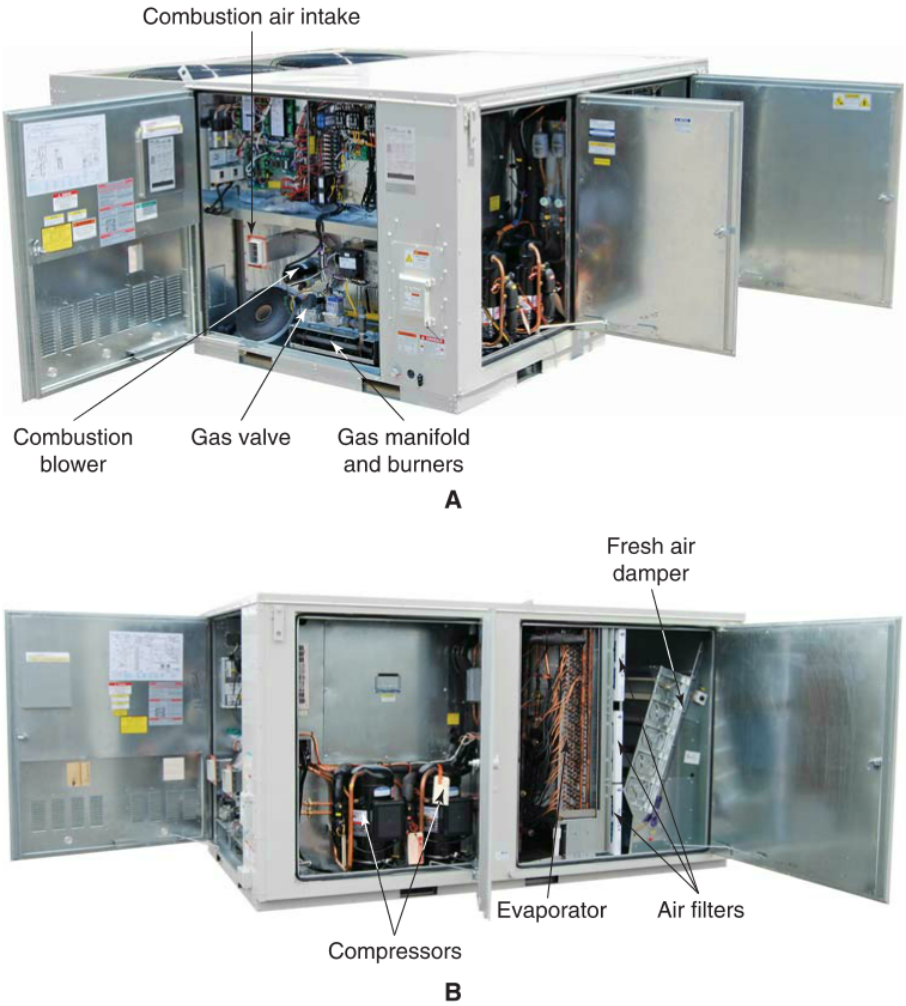

AAON

Figure 33-5. Access doors can be opened to access various parts of a rooftop unit for service. A—The burners, gas valve, and combustion blower of the gas-fired furnace are accessible through a door in the front of the unit. B—The compressors, evaporator, air filters, and fresh air damper can be accessed through doors in the side of the unit.

Copyright Goodheart-Willcox Co., Inc.

The furnaces in some rooftop units are oil-fired. Fuel is stored in an underground tank. A lift pump draws oil to a second, smaller tank. This tank may be at the same level as or slightly lower than the oil burner. Under no circumstances should the tank be more than 10′ (3 m) below the burner.

Electric resistance heating elements can also be used in rooftop units. These heating elements are available in various capacities, including 20 kW, 40 kW, and 60 kW. Heating elements are protected by ceramic insulators. The circuit has fuses, fusible links, and thermal cutouts, **Figure 33-7**.

33.1.2 RTU Air Circulation

Airflow through an RTU is controlled by the blower and different dampers. Sensing elements in the mixed-air duct control actuator motors that operate these dampers:

- The return damper.
- The conditioned air damper.
- The exhaust air damper.
- The fresh air damper.

All air circulated by an RTU is filtered as in other air distribution systems. This is not just the air within the building but also the fresh air introduced into the building. **Figure 33-8** shows an RTU's air control system.

Air-Side Economizers

In some cases, activity within a building raises the temperature to a level that would activate the air-conditioning system, even though the outdoor air temperature is below the system set point. If an air-side economizer is part of an HVAC system, it will prevent the compressor from starting. Instead, the system will draw in outdoor air to cool the building. This can save considerable energy, **Figure 33-9**.

An ***air-side economizer*** is a subsystem of an HVAC system that is used to introduce cool outdoor air into a building filled with warm, stuffy air. It is composed of several different controls, a movable louver system, and an actuator to move the louvers, **Figure 33-10**.

An economizer's controls sense and respond to different variables. When certain levels are sensed, the economizer operates. These measured variables may include the following:

- Indoor air temperature.
- Indoor humidity.
- Outdoor air temperature.
- Outdoor humidity.

Note that not all economizers sense all of these variables. They will at least sense indoor air temperature and outdoor air temperature. When these levels are at or below control settings, an economizer begins operation. This involves several different actions:

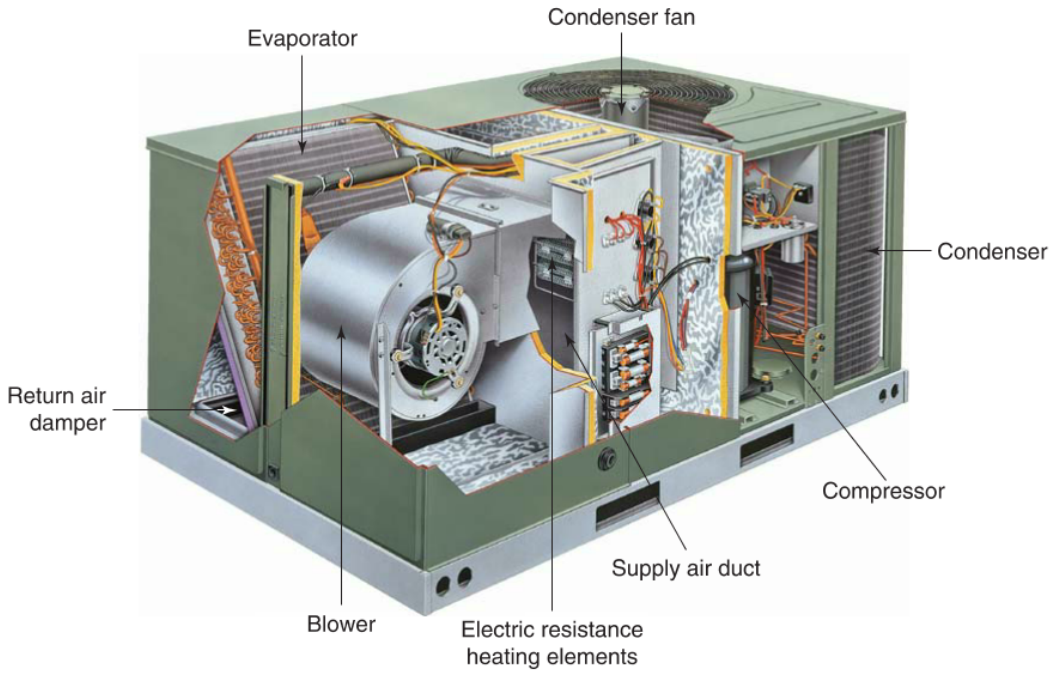

Rheem Manufacturing Company

Figure 33-7. Rooftop unit equipped with electric resistance heating elements.

Copyright Goodheart-Willcox Co., Inc.

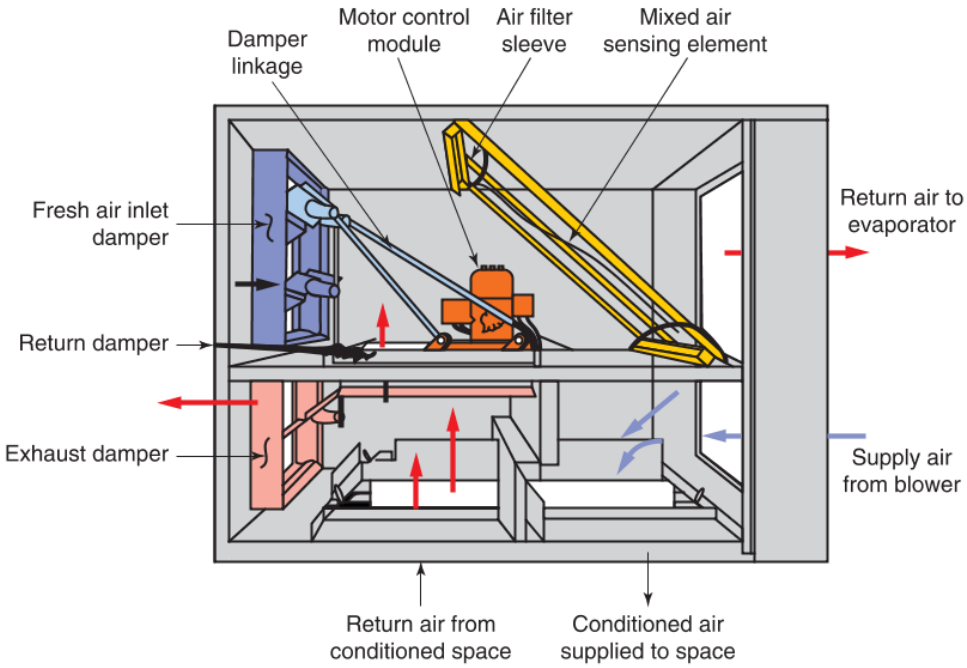

Goodheart-Willcox Publisher

Figure 33-8. Air-control system for a rooftop unit. The dampers are automatically controlled so that they always provide the desired air mixture.

Goodheart-Willcox Publisher

Figure 33-9. This RTU outdoor air intake has an angled cover to prevent infiltration of precipitation and an inlet screen to keep animals and bugs out of the air ducts.

- The compressor is turned off or prevented from operating.
- The condenser fan is turned off or prevented from operating, as it will not be rejecting any heat.
- Fresh air inlet louvers open on the return air side of the indoor blower.
- The indoor blower turns on to draw in cool, fresh air from outside.

Goodheart-Willcox Publisher

Figure 33-10. This actuator opens and closes fresh air inlet louvers for economizer operation.

Copyright Goodheart-Willcox Co., Inc.

Economizers provide free building cooling by taking advantage of cool outdoor temperature. This often occurs at night, early morning, or during the change of seasons. Anytime outdoor air is cool enough and dry enough, a cooling system can use the economizer to cool a building's conditioned space without running the compressor. This type of operation uses much less electrical power than when a compressor is running. However, it can only be activated during certain times of proper outdoor conditions.

Enthalpy Control

Economizers begin operation based on several different measured variables: indoor air temperature, indoor humidity, outdoor air temperature, and outdoor humidity. If indoor air temperature is already cool enough, an economizer will not cycle on. If outdoor air temperature is too warm, an economizer will not cycle on. Some economizers have a feature called ***enthalpy control***. This means the economizer senses and responds to outdoor air humidity, in addition to outdoor air temperature. If outdoor air humidity is too high, an economizer will not cycle on. Remember that *enthalpy* is a term referring to a substance's total heat content. Humid air, which is saturated with moisture, has a higher heat content than dry air (low humidity).

In the following example, refer to **Figure 33-11**. If indoor air temperature is 80°F and outdoor air is 60°F, economizer operation could cool a building. It would cool a building well if outdoor air had low relative humidity (Point A). Air at this point would have only 15 Btu per pound of heat content. However, if outdoor air was at 100% humidity (Point B), it would have a heat content around 26.5 Btu per pound. If this humid air were drawn into a building by an economizer, it might cool the building, but the humidity level would be too high for comfort. Occupants would need to run the air-conditioning compressor to remove the moisture from the air.

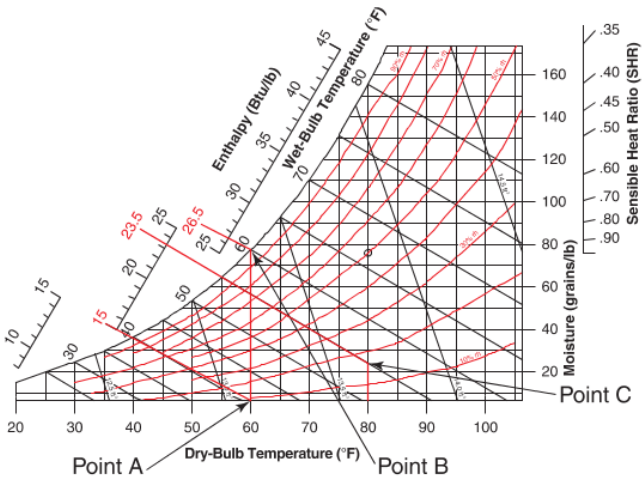

Goodheart-Willcox Publisher

Figure 33-11. A psychrometric chart examining the heat content of outdoor air for use by an economizer. Note how air at 60°F can have different enthalpy (heat content level) based on its relative humidity. Moisture in the air greatly affects heat content and human comfort.

To further show the importance of enthalpy control, look at Point C. It shows indoor air temperature at 80°F around 15% relative humidity. Following this point to the enthalpy scale shows that this indoor air has a heat content around 23.5 Btu per pound. If outdoor air is at 60°F at 100% humidity, it has a heat content of 26.5 Btu per pound. This 60°F air actually has a higher heat content than the 80°F air at 15% relative humidity. Drawing in this outdoor air would result in a loss of efficiency, because the air-conditioning compressor would still need to run to remove all the moisture brought in from outside. This shows the importance of using enthalpy control with an economizer. Humidity matters to human comfort.

Air Sample	Heat Content
60°F at 5% rh	15 Btu/lb
60°F at 100% rh	26.5 Btu/lb
80°F at 15% rh	23.5 Btu/lb

Enthalpy control is important because part of comfort is regulating humidity levels. If outdoor air temperature is low but humidity is high, an economizer could fill a building with moderately cool but humid air. Occupants would want to run the air conditioning to remove the humidity. In such cases, it is usually better to just run the air conditioning to cool indoor air, rather than have to remove so much humidity.

10

Pro Tip

Stuck Economizer Louvers

If an RTU customer complains about uncomfortable indoor conditions, consider whether their economizer has been properly maintained. Sometimes an economizer's outdoor air intake louvers can become stuck open. Such improper operation of economizers can disrupt indoor climate or at least decrease system efficiency. Economizers should be checked for proper operation at every service call.

33.1.3 Comfort Cooling Controls

Many of the controls used in residential air conditioning are also used in commercial air conditioning. Thermostats monitor indoor air temperature. Various motor controls turn on and off compressors and blower motors. Many similarities exist.

Copyright Goodheart-Willcox Co., Inc.

Some systems cycle off based on low-side pressure. While the thermostat monitors conditioned space temperature, its switch controls a solenoid valve mounted in the liquid line. When room temperature reaches the thermostat's cut-off temperature, the thermostat opens a circuit controlling the solenoid valve. De-energizing this circuit causes the solenoid valve to close and block the liquid line, preventing refrigerant from entering the evaporator.

The compressor continues to run momentarily, pumping down the low-side of the system. This reduces low-side pressure until the low-side pressure switch opens the compressor's motor circuit, stopping the compressor. The low-side pressure control monitors suction pressure and is connected in series with the motor starter's coil. See **Figure 33-12**. HVACR systems with different capacities and different refrigerants will shut off the compressor at different pressures. A high-side pressure switch is also provided in this control. The control will stop the compressor if the high-side pressure exceeds a preset limit.

Controls commonly found in comfort cooling systems include the following:

- Thermostat (24 V or 120 V) to control temperature within the conditioned space.
- Evaporator ice monitoring control (freezestat), two-wire 24 V or 120 V, to control dampers, valves, or compressors when the evaporator temperature approaches 32°F (0°C).
- Multiple compressor sequence starting controls.
- Multicylinder compressor unloading sequencing controls.
- Zoning damper controls.

Limit Controls

Comfort cooling systems use several types of limit controls:

- Motor limit controls.
- Pressure limit controls.
- Temperature limit controls.

Commercial systems are usually equipped with pressure controls. The low-side and high-side pressure controls are usually designed to lock the compressor

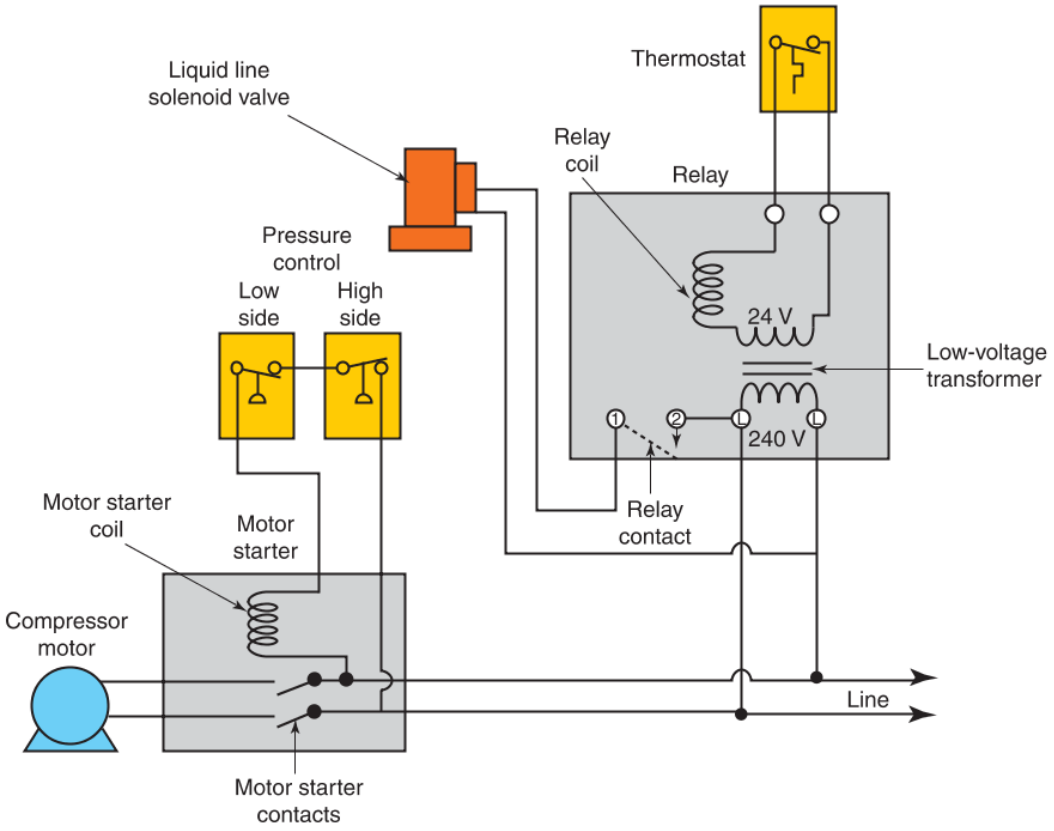

Goodheart-Willcox Publisher

Figure 33-12. Comfort cooling system wiring diagram. Note that the thermostat operates the solenoid valve. The system cycles as low-side pressures vary. The compressor low-pressure cut-out is reached once the refrigerant solenoid valve closes. Cut-out pressures are determined by the cooling capacity and type of refrigerant used in the system.

Copyright Goodheart-Willcox Co., Inc.

circuit open if any unusual pressures occur. These controls are safety devices. They operate only if a potential problem develops. They prevent devices, such as the compressor, from being damaged. If a control deactivates a system, the operator should carefully check the system for faults before turning it back on. A combination low-pressure and high-pressure control is shown in **Figure 33-13**.

Caution

Manual Reset Controls

Do not replace manual reset controls with automatic reset controls. A manual reset demands the attention of the operator and signals something is wrong and should be corrected.

Motor limit controls will stop a motor if current draw becomes too high. They will also stop the motor if the motor temperature rises to a dangerous level. Motor limit controls, also called motor protection devices, are described in detail in Chapter 16, *Electrical Control Systems*.

Anti-icing control is another type of temperature limit control. Anti-icing control is often called a *freezestat*. It monitors the temperature of the evaporator. If ice accumulates on the evaporator, this control stops the cooling system, allowing the ice to melt.

Sequential Controls

Sequencing adjusts equipment operation to meet demand so the system performs at peak efficiency. Large cooling systems use sequencing to operate multiple compressors or condenser fans. These systems are controlled by microprocessors, which determine the amount of cooling required. If the cooling load is low, only one compressor and condenser fan are energized. When the cooling load is high, the second compressor and condenser are energized. **Figure 33-14** shows the electrical controls of a condensing unit that contains two compressors and two condensers.

Pneumatic Control Systems

Many HVACR systems use electrical and electronic control systems. However, this is not the only way to control a system. Some commercial air-conditioning systems use pneumatic control systems. ***Pneumatics*** is the use of pressurized air to perform certain mechanical actions.

A pneumatic system's three main parts are pressure-sensing devices, pneumatic controllers, and pneumatic actuators. The main line supply pressures typically used are either 12 psig or 24 psig (83 kPa or 166 kPa). However, some systems operate at a vacuum.

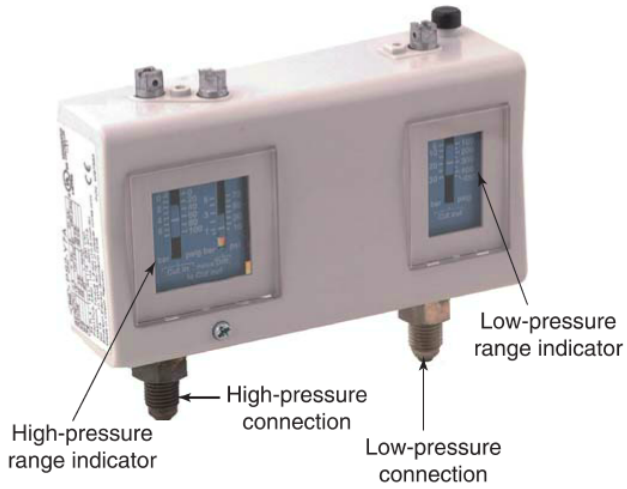

Emerson Climate Technologies

Figure 33-13. Combination low-pressure and high-pressure control will shut off the compressor motor if system pressure reaches the low or high limits.

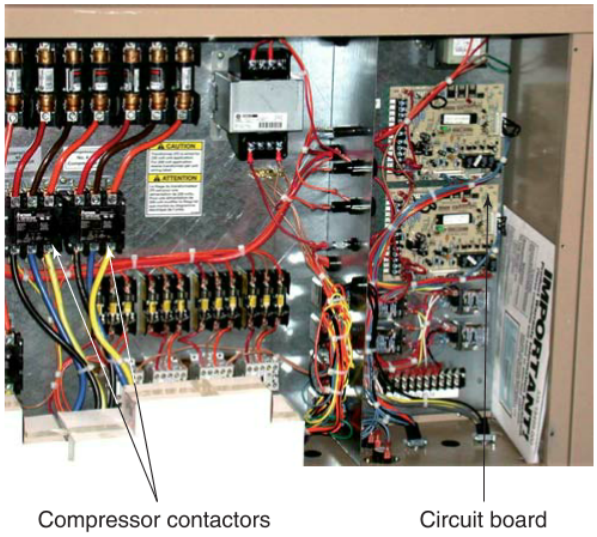

York International Corp., Unitary Products Group

Figure 33-14. Electrical control panel for condensing unit with multiple compressors.

The 12 psig system uses an operating pressure of 3 psig to 15 psig (20 kPa to 100 kPa). The 24 psig system uses an operating pressure of 3 psig to 27 psig (20 kPa to 185 kPa). Pressure regulators reduce the supply air pressure. The supply air pressure for these systems is as follows:

- 12 psig system = 18 psig to 20 psig (125 kPa to 140 kPa)
- 24 psig system = 30 psig to 35 psig (205 kPa to 240 kPa)

Copyright Goodheart-Willcox Co., Inc.

Pneumatic thermostats are controlled by a pressurized air line. Air in pneumatic lines can be used to operate ***pneumatic motors***. These consist of a piston in a cylinder or pressing against a diaphragm. Pneumatic motors can be used to operate dampers, valves, and switches. Pneumatic signals can also be conditioned to provide a signal to system controls. Pneumatic controls are often used in large commercial and industrial systems. These control systems should be thoroughly checked each month.

33.1.4 Installing Rooftop Units

Rooftop units are heavy. They often contain all the heating and cooling equipment for part of a building in a single package. Heavy equipment is needed to move RTUs up to a rooftop. Riggers usually handle their initial installation, removal, and replacement, **Figure 33-15**.

Rooftop units must be installed using methods that will provide a leakproof roof connection. Installation is usually made as shown in **Figure 33-16**.

Acoustical material is often used for deadening sound. A resilient (flexible) gasket is installed between the rooftop base rail and the top edge of the roof curb. This gasket is very important. If it is not tightly installed, there may be leaks. One method used to make the roof leakproof is shown in **Figure 33-17**.

The electrical connections to a rooftop unit must comply with local codes. The control system is usually the responsibility of a refrigeration installation technician. A diagram of the control system of a typical rooftop unit is shown in **Figure 33-18**.

If the rooftop system has a gas furnace, the gas piping must be installed according to the appropriate code. Pipes must be supported and protected. **Figure 33-19** shows a typical installation for a 1 1/4″ gas line. Note that two

Goodheart-Willcox Publisher

Figure 33-15. Riggers securing straps to a rooftop unit before it is moved using a crane.

Service Call Scenario

33A: Commercial Rooftop Unit—No Cooling

Customer Complaint: No Cooling

Possible Causes: Blown fuses, power outage, defective circuit breakers in electrical panel.

Description of Problem: Mr. Turner, owner of a 4000 ft^2 commercial building, has reported that the rooftop air conditioner is not cooling. Prior to arriving at the jobsite, the technician, Keith, reviews the work order. Upon arriving at the building, he identifies himself to Mr. Turner and listens carefully to his comments.

Testing: Keith places the wall thermostat to call for cooling. Next, he sets his ladder correctly to reach the roof. He observes the system's operation. He notes very quickly that both the compressor and the condenser fan motor are not in operation. This triggers Keith to perform a voltage check at the unit's electrical disconnect. He finds that the supply source voltage is present, but that the cartridge fuses have been blown. To confirm his diagnosis, he removes the fuses and tests them for continuity. The readings read infinity, indicating an open fuse element. After consulting with Mr. Turner, Keith is informed that the unit had been operating during an electrical storm, and stopped working thereafter. He then informs Mr. Turner of the issues and offers solutions and the costs. Mr. Turner agrees to have Keith perform the needed service.

Solution: Keith replaces the fuses and starts up the system. He checks all operations upon starting and restarting and notes no complication. The unit's temperatures and pressures are within normal ranges. The unit is now cooling. Keith provides Mr. Turner with the bill and informs him that a follow-up call will occur.

Safety: Remember to always practice good electrical safety procedures when accessing electrical panels. When using a ladder, be certain to follow approved safety procedures.

Copyright Goodheart-Willcox Co., Inc.

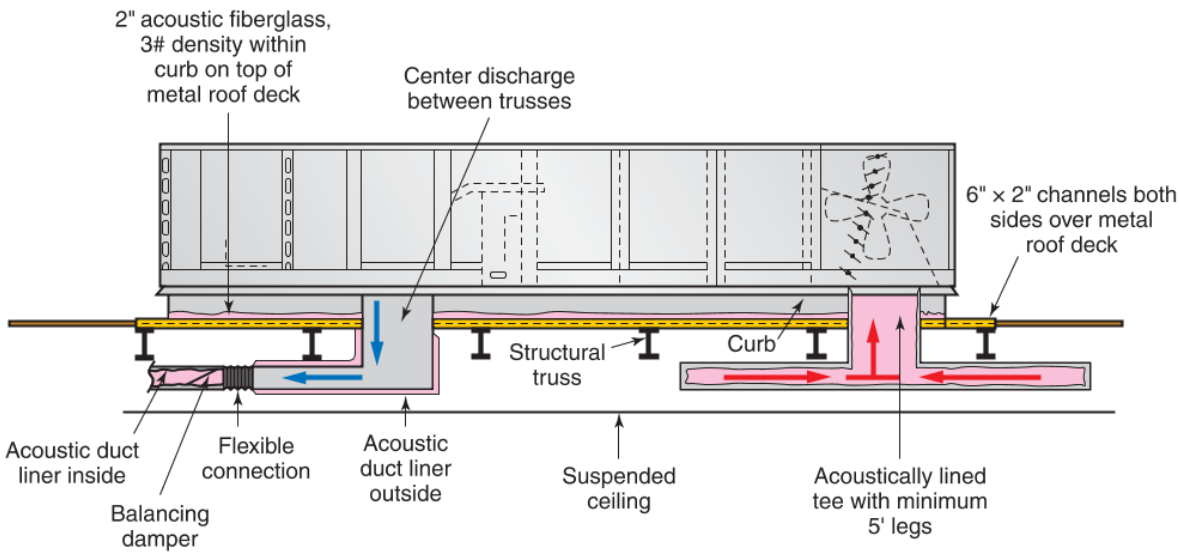

Goodheart-Willcox Publisher

Figure 33-16. Installation details of a complete rooftop unit.

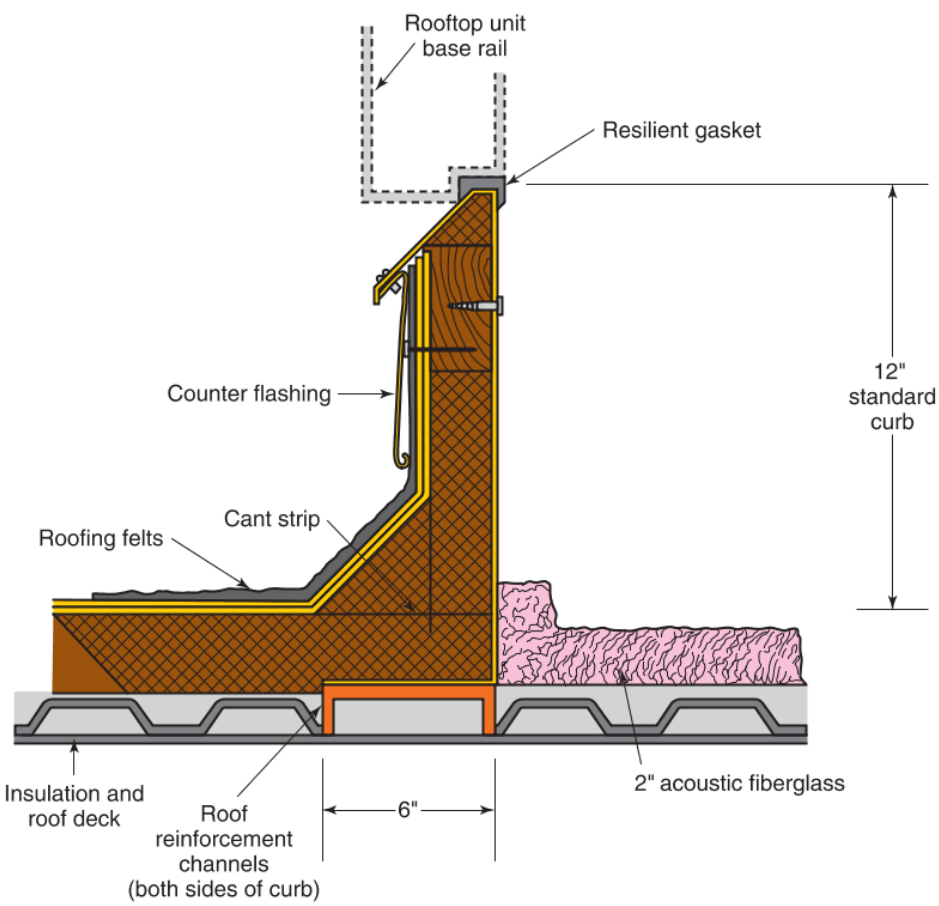

Goodheart-Willcox Publisher

Figure 33-17. A gasket between the roof curb and the base rail of the rooftop unit prevents water from leaking into the building.

Copyright Goodheart-Willcox Co., Inc.

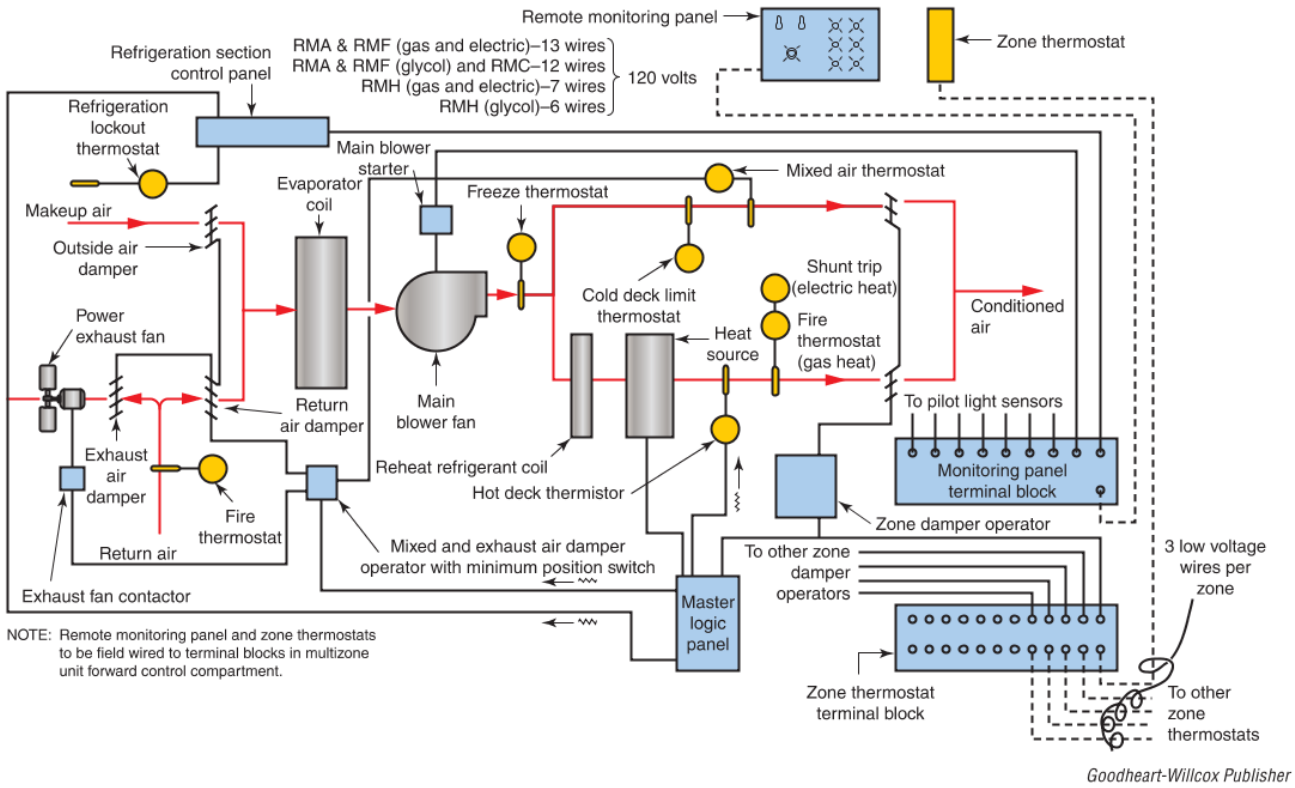

Goodheart-Willcox Publisher

Figure 33-18. Electronic control system for rooftop unit. Red arrows indicate direction of airflow.

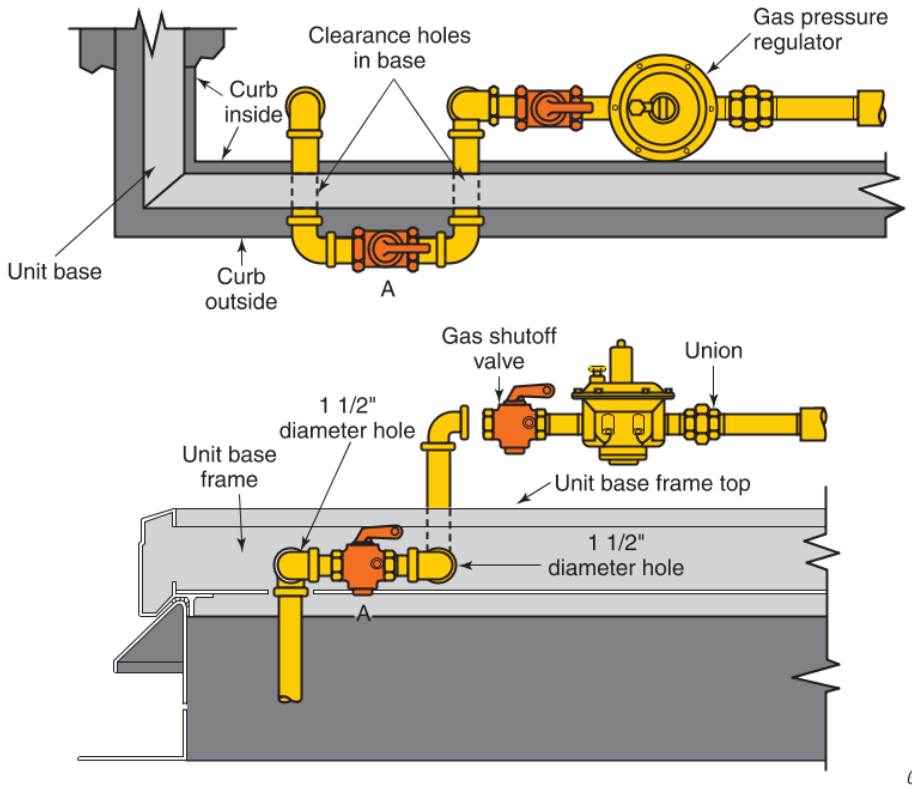

Goodheart-Willcox Publisher

Figure 33-19. Fuel gas line installation on rooftop system. A hand shutoff valve (A) is mounted outside of the rooftop unit for easy access.

Copyright Goodheart-Willcox Co., Inc.

hand shutoff valves are used. One is located outside the rooftop unit's case. It will permit emergency shutdown of the furnace in case of accident or fire.

Code Alert

Gas Piping to a Rooftop Unit

According to the International Fuel Gas Code, gas piping installed outdoors (including on rooftops) must be elevated at least 3 1/2″ above the roof surface. It should also be securely supported and installed in a way that it is protected from physical damage. Where gas pipe passes through an outside wall, it should be protected from corrosion by coating or wrapping it with an inert material. When piping is in a protective sleeve, the space between the piping and sleeve must be sealed.

Some RTUs use piped-in hot water or steam to provide heating. Piping for these systems must be carefully installed to avoid air traps and freezing. Hot water systems usually use a nonfreezing solution composed of water and ethylene glycol. **Figure 33-20** shows the piping for a steam system.

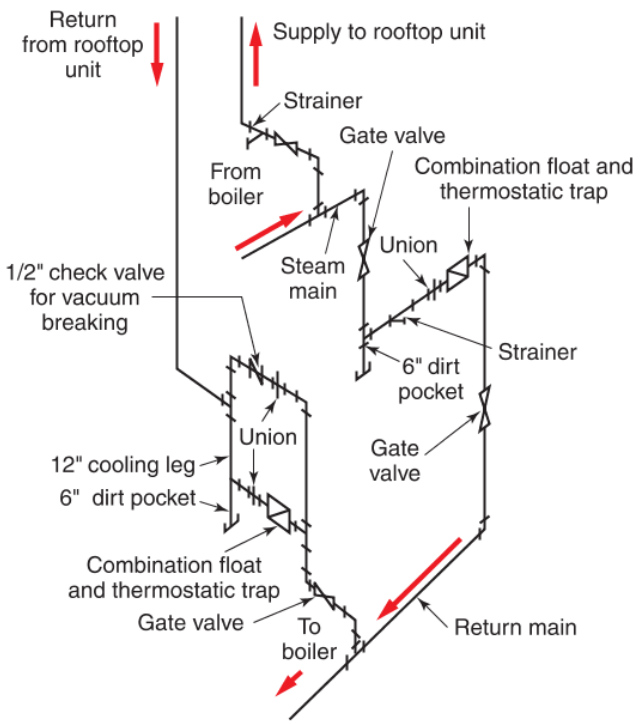

Goodheart-Willcox Publisher

Figure 33-20. Steam pipe installation for steam heating system used on rooftop unit. More than one steam path is provided. This helps prevent restricted flow if one section is partially closed. Balance is improved.

33.1.5 Servicing Rooftop Units Safely

Rooftop units include the same basic components as traditional refrigeration systems: evaporator, compressor, condenser, and metering device. Some rooftop units operate as heat pumps. Other units include components for gas or electric heating. The service procedures performed on a rooftop unit are essentially the same as those performed on ground level heating and cooling systems. However, since the system is located on the top of a building, additional care must be taken to perform the work safely.

Use all possible safety precautions when climbing to the roof. If a portable ladder is used, it must be securely and firmly based on the ground. It must lean against the building at a moderate angle with its base 1′ away from the vertical wall for every 4′ of vertical rise. This will keep it from falling away from the building. It also must extend 3′ above the roof edge.

Use both hands on the ladder when climbing or descending a ladder. A portable ladder should not be used in high or gusty wind conditions. Be especially careful if it is raining or snowing. Do not attempt to carry equipment or supplies up or down a ladder. Lift tool boxes, refrigerant cylinders, and other objects with a rope. The rope should be guided from below.

Extreme caution must be used while working on or near electrical circuits. Hinged panels must be secured in the open position. Otherwise, the wind may swing them violently and injure someone. Loose panels must be held down securely to prevent wind blowing them off the roof. If a system is equipped with gas or oil burners, avoid breathing fumes coming out of the flue.

When working on rooftop units in cold weather, use gloves and hand warmers. Some technicians prefer portable heaters. In windy weather, set up a windbreak to provide wind shelter. If the wind is strong, use a safety belt. The belt should be attached to a solid part of the unit.

When working on rooftop units in hot, sunny weather, shield the tools from the sun. Metal can become so hot it will burn your hands. When working under sunny conditions, be sure to wear sunblock and drink enough water. Wear gloves when handling sun-heated access panels. Wear a hard hat and goggles under all conditions and rubber gloves when working on electrical circuits.

33.1.6 Variable Refrigerant Flow (VRF) Systems

As discussed in previous chapters, variable refrigerant flow (VRF) systems are very efficient and quiet. They continuously vary compressor and fan operation to match the refrigerant flow needed for cooling capacity. VRF systems can be used to meet the needs of many

Copyright Goodheart-Willcox Co., Inc.

occupants in a large commercial building. Examples include buildings that have offices with workers on different hours or groups that may work on a weekend while the majority of the building is vacant.

Typical outdoor VRF units can connect to multiple indoor coils. These systems are especially well-suited for building environments in which individual floors or rooms require zoning. Multiple outdoor units may be roof mounted to provide heating and cooling to large office complexes, **Figure 33-21**.

VRF systems are also efficient at regulating the heating or cooling in one set of offices that may have a greater solar load than another set of offices on the other side of the building. **Figure 33-22** illustrates the zoning that is possible in an office building that uses a VRF system.

The length of piping is an important design consideration in VRF systems. Pumping of refrigerant above 150′ in height results in too great of a pressure drop in the lines. Large office towers that exceed this may split the arrangement of outdoor units. Rooftop units are used to supply the upper floors. Ground units feed the lower floors.

Heating and cooling multiple zones in a VRF system is accomplished a number of different ways. Some VRF units use electric heaters or energy recovery modules. Other systems use heat recovery. This method uses a third tube between indoor and outdoor units that allows refrigerant flow to be directed for the transfer of refrigerant between the indoor coils. As some indoor coils are operating as evaporators, other indoor coils are operating as condensers, **Figure 33-23**.

Ventilation in commercial buildings is a critical component in maintaining a healthy indoor environment. ASHRAE standards require a certain amount of outside air to be brought into a room per hour and also specify the number of air changes based on occupancy of a building. VRF systems in large buildings can achieve air filtration, ventilation, and humidity control through the use of air handlers. Ductwork is significantly smaller in new construction VRF applications as it serves only for air circulation and humidification.

33.2 Chillers

Chillers are cooling systems that use a loop of chilled water (instead of forced air) to provide cooling to a conditioned area. In a chiller system, a refrigeration system is used to cool water. This refrigeration system can be either a mechanical system (using a compressor) or an absorption system. The cold water is circulated through a building to provide cooling to the occupied spaces. Chillers are primarily used

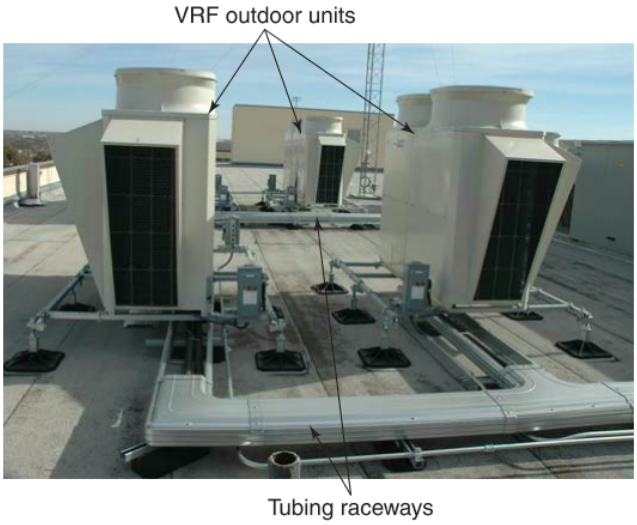

RectorSeal

Figure 33-21. Multiple VRF outdoor units mounted on the roof of a bank. Notice the different tubing raceways protecting the refrigerant line sets.

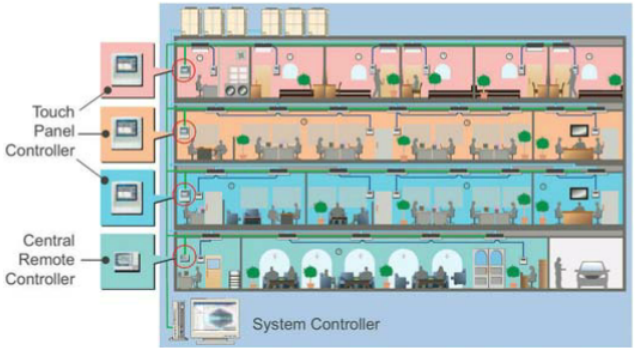

Fujitsu General America, Inc.

Figure 33-22. A VRF system with multiple outdoor units and indoor units used in an office building to precisely control temperatures to different zones.

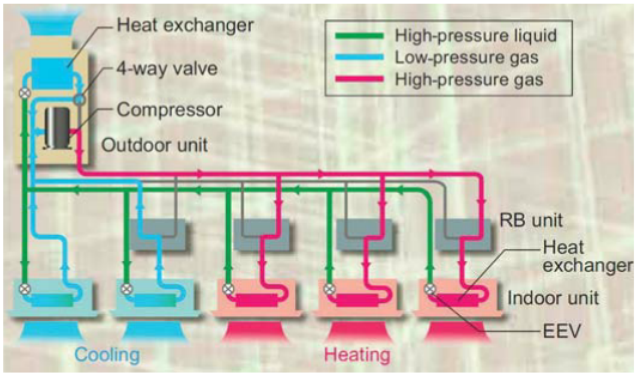

Fujitsu General America, Inc.

Figure 33-23. Heat recovery operation in a VRF system. Some indoor coils provide heating, while other indoor coils provide cooling.

Copyright Goodheart-Willcox Co., Inc.

in larger industrial and commercial air-conditioning and refrigeration applications. Chillers can range from 20-ton to 2000-ton capacity. The popularity of chillers is due in large part to their cost-effectiveness as a result of low energy consumption during part-load and full-load operation.

Pro Tip

Hybrid Chiller Systems

In some regions, it may be cost-effective to install a hybrid gas and electric chiller system. This type of system allows the owners to switch between gas and electric chillers, depending on which energy source is the least expensive at a given time.

There are two main types of chillers: compression chillers and absorption chillers. Compression chillers are discussed in this chapter. Absorption chillers are discussed in Chapter 34, *Absorption and Evaporative Cooling Systems*.

Compression chillers use two different refrigerants: a primary refrigerant and a secondary refrigerant. The ***secondary refrigerant*** is a fluid that is circulated to absorb heat from a conditioned space. Water is commonly used as the secondary refrigerant in chillers designed for comfort cooling applications. Water is fluid, inexpensive, nontoxic, and mostly noncorrosive, making it an excellent secondary refrigerant. As a chiller circulates cool water through a building, the water absorbs and removes heat from the conditioned spaces.

Other secondary refrigerants commonly used in chillers include salt-based brines (calcium-chloride and sodium-chloride), glycol-based fluids (ethylene and propylene glycols), and solutions for low-temperature heat transfer (methylene chloride, trichloroethylene, and acetone). Brines are often used as secondary refrigerants for low-temperature refrigeration systems.

The ***primary refrigerant*** in a chiller system absorbs heat from the secondary refrigerant and rejects the heat from the system. A number of common refrigerants are used as primary refrigerants in chillers, such as R-22 and R-123, R-134a, and ammonia. The phaseout of R-22 has resulted in the introduction of chillers designed for use with R-134a, R-410A, and R-407C. The efficiency of an R-410A system is actually higher than the efficiency of the R-22 system that it replaces. R-134a can be used as a retrofit refrigerant for systems that used R-22.

Caution

Refrigerant System Pressures

Refrigeration systems using R-407C and R-410A operate at higher pressures than R-22 systems. R-407C and R-410A should only be used in systems designed specifically for their use.

Service Call Scenario

33B: Commercial Packaged Unit—Insufficient Cooling

Customer Complaint: Insufficient Cooling

Possible Causes: Low refrigerant charge, defective metering device, defective filter drier.

Description of Problem: Mr. Atek, owner of a commercial building, reports that the air-conditioning unit does not appear to be cooling. Prior to arrival at the location, the technician, Matt, reviews the work order. Upon arriving at the business, he identifies himself to Mr. Atek and listens carefully to his comments.

Testing: With the thermostat calling for cooling, Matt installs his gauge manifold and observes the system pressures. He visually inspects the entire unit. He notes frosting at the outlet of the liquid line filter-drier. A check of the system's pressures reveals that both the low- and high-side pressures are dropping along with the compressor amperage. Matt determines that this could be caused by a plugged filter-drier that may be restricting refrigerant flow. He notifies Mr. Atek of the issue and recommends that the filter-drier be replaced and the system be recharged. Mr. Atek agrees to have him perform these services.

Solution: Matt recovers the refrigerant, removes the plugged filter-drier, and brazes in a new filter-drier. He then evacuates the system and recharges it to system specifications. System pressures and temperatures are checked and all operations are within normal readings. The system is now cooling satisfactorily. Matt then provides Mr. Atek with a bill and informs him that a follow-up call will occur.

Safety: When working with high-pressure systems, remember protection is needed for eyes and hands. When using torches, follow all safety precautions, and make sure all refrigerant has been recovered. When refrigerant and open flame are combined, toxic and fatal gases are produced. Good ventilation is required.

Copyright Goodheart-Willcox Co., Inc.

A compression chiller has many of the same basic components as a standard mechanical air conditioner: compressor, condenser, refrigerant metering device, and evaporator. These components are larger in a compression chiller in order to accommodate the increased amount of refrigerant in the system. In a chiller system, the evaporator, compressor suction line, and chilled liquid lines are always insulated. The evaporator cools the water. This cold water is then pumped to the conditioned spaces of a building, where it absorbs heat.

The compressors used in chiller systems can be hermetic, semi-hermetic, external direct drive, or open drive. Condensers can be evaporative, air-cooled, or water-cooled. Air-cooled and water-cooled are the most common. Thermostatic expansion valves (TXVs) are the most popular type of refrigerant metering device used in chillers. Other components used in chiller systems can include liquid receivers, water-side economizers, and subcoolers. Optional accessories include an oil cooler, oil separator, purge unit, oil pump, and refrigerant transfer unit.

Chillers can be used for large industrial process cooling or to cool large commercial buildings. Several chiller units can be connected in parallel to provide adequate capacity for large cooling loads. A single chiller might use multiple compressors connected in parallel and one refrigerant circuit. Such systems require sophisticated control for optimum efficiency. **Figure 33-24** shows a chiller with multiple compressors and an air-cooled condenser used for an ice arena.

The evaporators used in chiller systems are usually the direct-expansion (dry) type. In a ***direct-expansion evaporator***, refrigerant is fed into the evaporator at the same rate that it evaporates. This prevents large amounts of liquid refrigerant from pooling in the evaporator. Water flowing around the evaporator coil is cooled as the refrigerant evaporates inside the coil. The chilled water is then distributed to cooling loops throughout the building, **Figure 33-25**.

Heat from inside a building transfers to the cool water inside the cooling loops, lowering the room temperature and raising the temperature of the cooling water. The warm water returns to the chiller, where it is once again cooled and recirculated.

Many chillers use a water-cooled condenser in combination with a cooling tower. The water circuit for the condenser is completely separate from the evaporator's water circuit. These two groups never meet or mix. See **Figure 33-26**.

Cooling tower water enters a water-cooled condenser where it absorbs heat from the condensing refrigerant. The water is then sent to a cooling tower in which the water is drained or sprayed from the top. As the water falls toward the bottom, it is cooled by evaporation. Occasionally, forced-air fans are used in a cooling tower to aid evaporation. The cooled water returns through water pumps back to the condenser. **Figure 33-27** shows the flow of the water through a water-cooled condenser and cooling tower.

Chiller efficiency is determined by the temperature of chilled water leaving the chiller and the temperature of return water entering the chiller. The AHRI standard recommends that chiller evaporators

Service Call Scenario

33C: Commercial Rooftop Unit—Lack of Cooling

Customer Complaint: Lack of Cooling

Possible Causes: Overcharged system, malfunctioning compressor, defective condenser fan motor.

Description of Problem: Mr. Sharma, owner of a small machinery shop, has reported that the rooftop unit is not cooling. Prior to arriving at the jobsite, the technician, Aroon, reviews the work order. Upon arriving at the building, Aroon identifies himself to Mr. Sharma and listens carefully to his comments. Mr. Sharma shares that the unit has been experiencing difficulty lately and that he had, in fact, had another company out for repairs. He indicates that the other company was unable to repair the unit and expresses his dissatisfaction with that company.

Testing: Aroon installs his gauge manifold to determine the system pressures. The high-side pressure is very high and is drawing a high amperage. The low-side pressure is also higher than normal. Aroon concludes that the unit is extremely overcharged. He informs Mr. Sharma of the issue and offers a solution and the cost for such. Mr. Sharma agrees to have Aroon perform the needed service.

Solution: Aroon begins by recovering the refrigerant. He then evacuates the system and recharges using the subcooling method. The remaining system operations are examined and all appear to be operational. The pressures have returned to normal and the system is now producing a cooling effect. Aroon provides Mr. Sharma with the bill and informs him that a follow-up call will occur.

Safety: Always wear eye protection and gloves when charging refrigerant. Most refrigerants need to be liquid charged, and if not careful when charging, they could cause instant frostbite to skin or eyes. Eye and hand protection can prevent serious injuries.

Copyright Goodheart-Willcox Co., Inc.

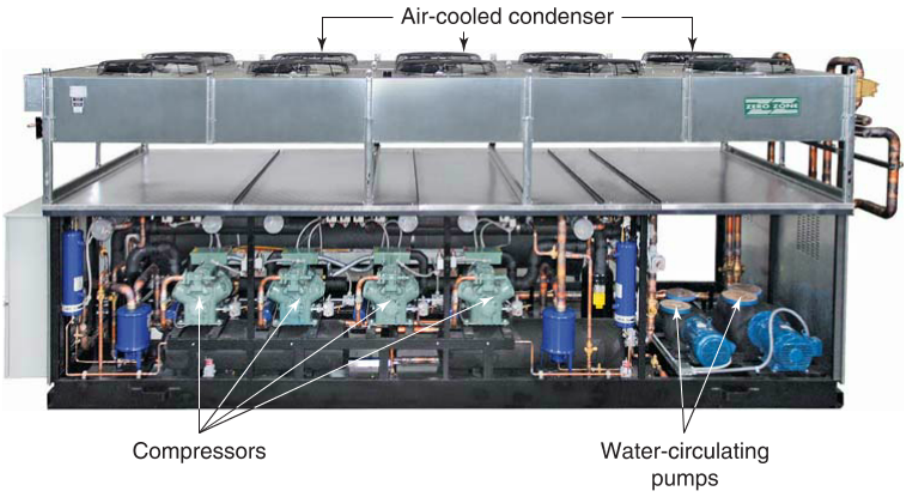

A

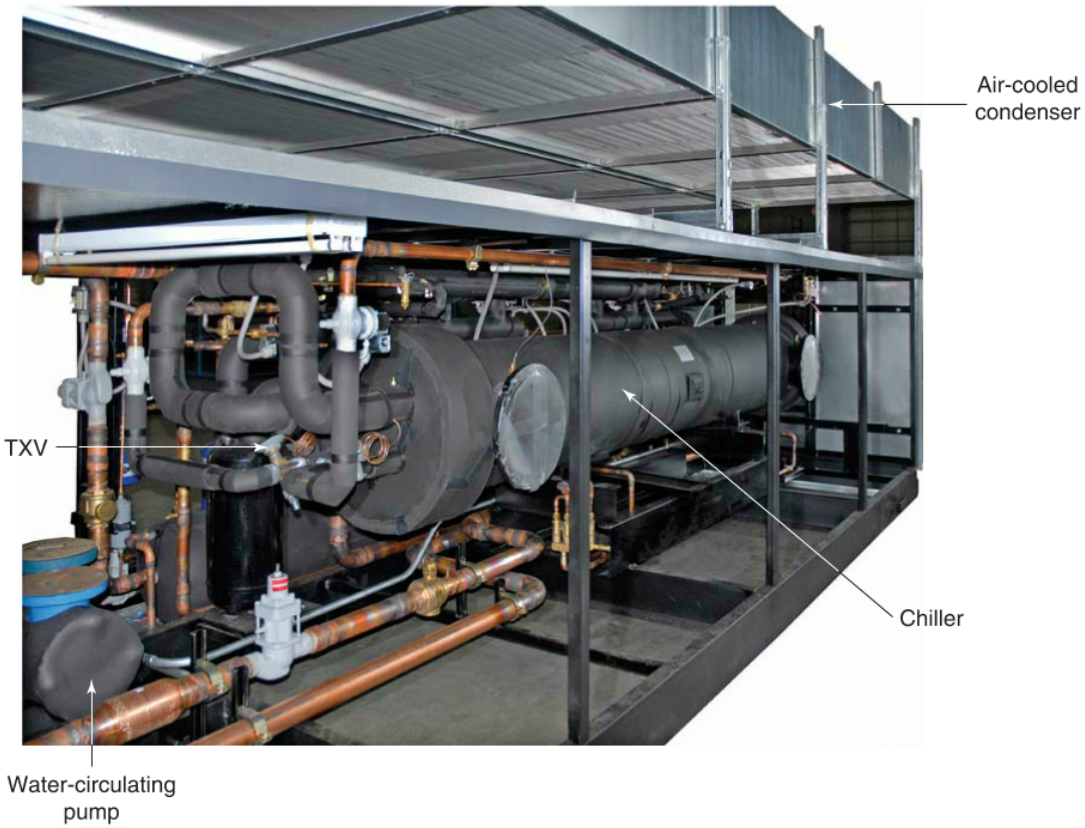

B

Zero Zone, Inc.

Figure 33-24. Chiller unit using multiple reciprocating compressors. A—Front view. B—Close-up rear view of the same system.

Copyright Goodheart-Willcox Co., Inc.

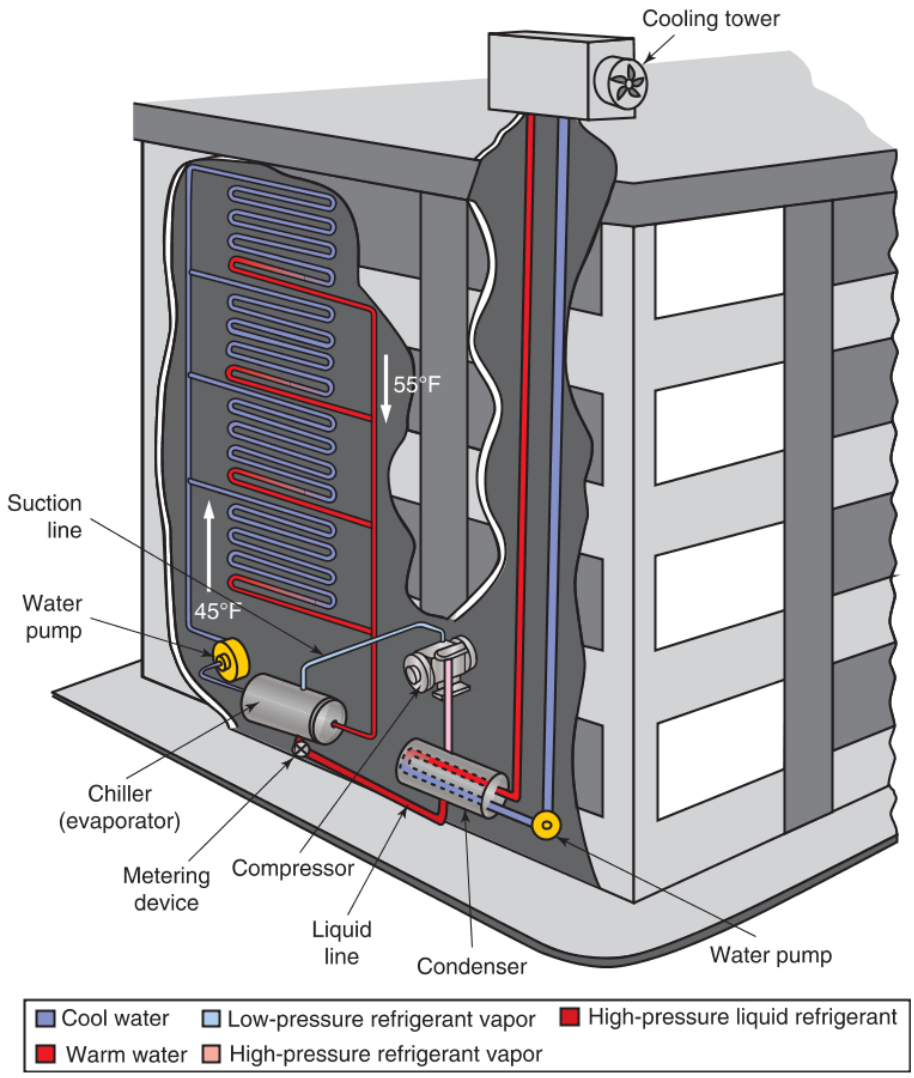

Goodheart-Willcox Publisher

Figure 33-25. In this chiller system, the water leaves the chiller's evaporator at 45°F (7°C). It circulates throughout the building, picking up heat, and returns to the evaporator at 55°F (13°C). This chiller system uses a water-cooled condenser and cooling tower to reject heat to the outside of the building.

operate at a 44°F (7°C) chilled water temperature with a water inlet temperature at 54°F (12°C). The efficiency of a chiller's matching water-cooled condenser is also monitored. It should have a condenser inlet water temperature of 85°F (29°C) and an outlet water temperature of 94°F (34°C). These temperatures can be used in order to determine if the chiller is operating within design parameters.

33.2.1 High-Pressure Compression Chillers

Chillers can be categorized by their operating pressures. They are either high-pressure or low-pressure. ***High-pressure chillers*** are compression chillers that operate under high pressures. They are used primarily for commercial and industrial process cooling. The high operational pressure will determine the size of the unit needed to accomplish the cooling task. For example, a 400-ton unit may be required in order to maintain the desired temperatures in a 20-story commercial office building.

33.2.2 Low-Pressure Compression Chillers

Low-pressure chillers are typically centrifugal chillers charged with R-123. A portion of these systems

Copyright Goodheart-Willcox Co., Inc.

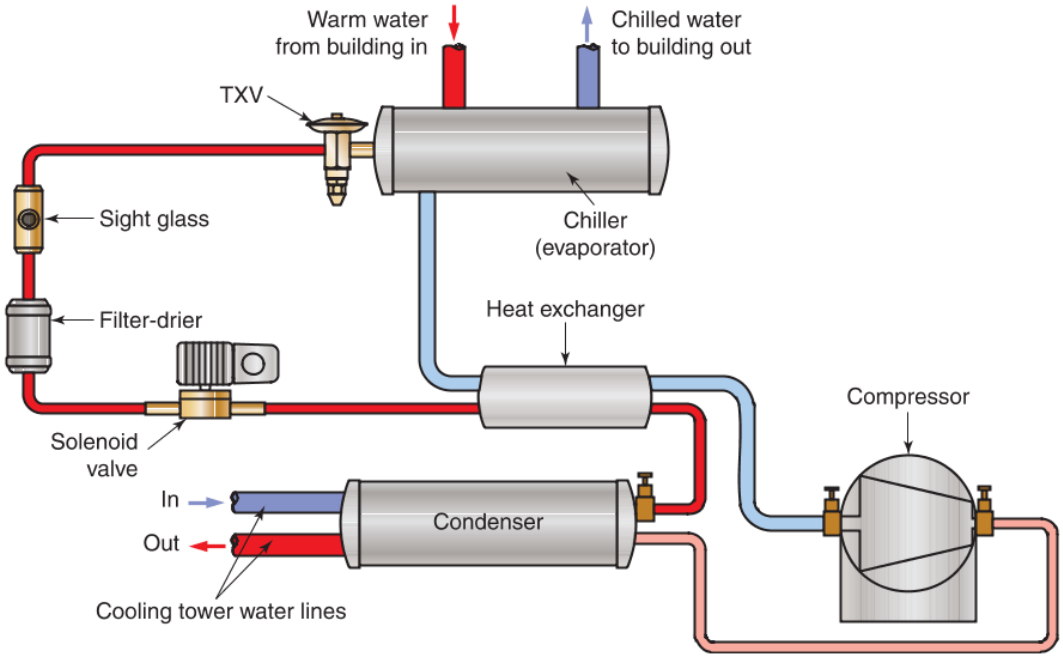

Goodheart-Willcox Publisher

Figure 33-26. In a chiller system, the condenser water circuit and the evaporator water circuit are completely separate.

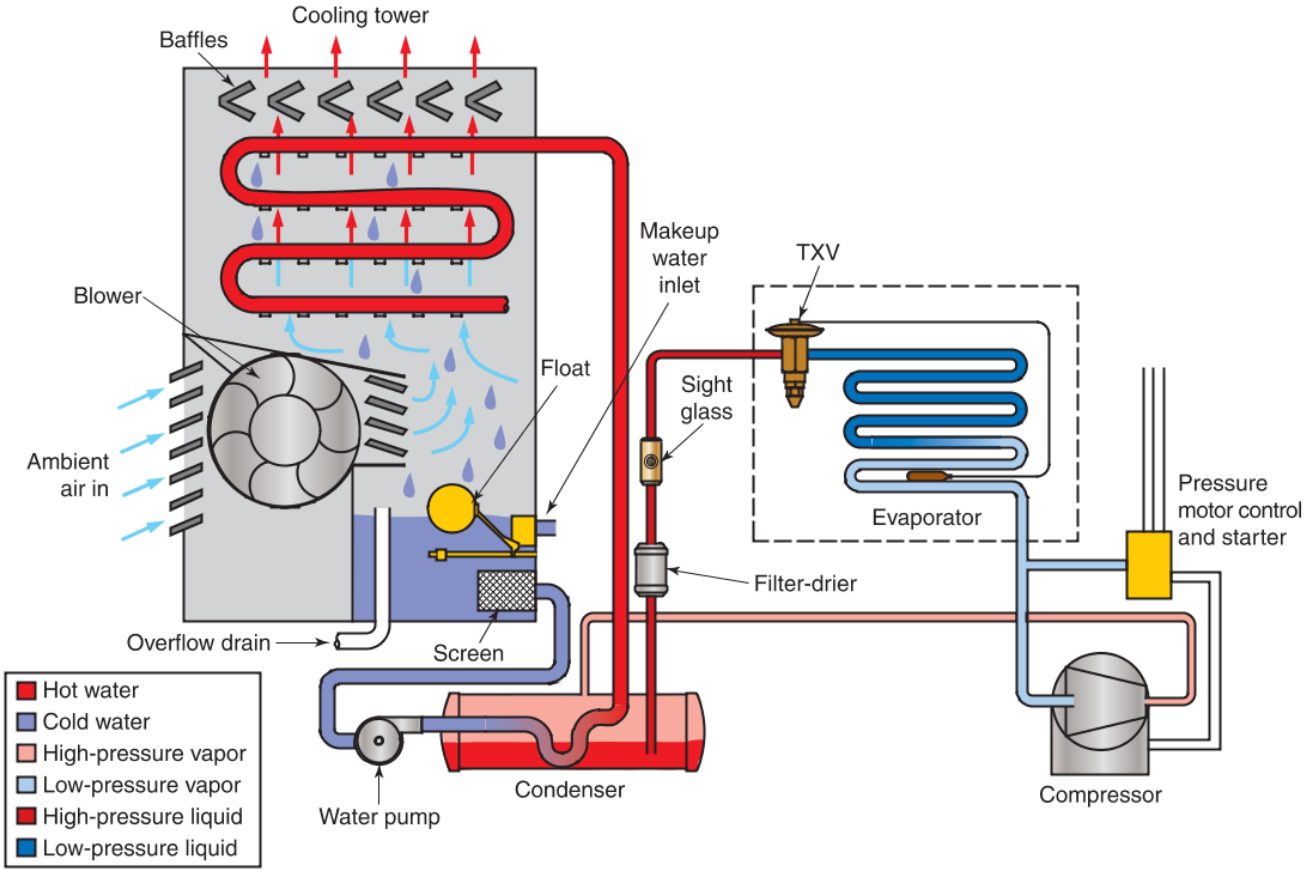

Goodheart-Willcox Publisher

Figure 33-27. Chiller using a water-cooled condenser and cooling tower for heat rejection.

Copyright Goodheart-Willcox Co., Inc.

operate under low atmospheric pressures (200 kPa) while operating at typical conditions for cooling. This enables them to produce very low evaporator temperatures. Most of the components in a low-pressure chiller are similar to those of the high-pressure system. Therefore, the operation is very similar. High-pressure and low-pressure centrifugal chillers are almost identical. However, due to lower operating pressures, low-pressure chillers are not as heavily constructed as high-pressure systems.

Purge Units

The evaporators in some low-pressure chillers operate in a vacuum. Since it is difficult to have a perfectly sealed system, some air and moisture are likely to leak in over time. Noncondensables, such as air and moisture, that enter a system reduce the system's cooling capacity. The compressor must still perform work to move the noncondensables through the system, but they do not contribute to the cooling effect. Noncondensables in the system tubing also reduce the heat exchanging capability of the system. Any moisture in the system can form acids, which increase corrosion and can lead to compressor failure.

A ***purge unit*** is an auxiliary component designed to remove noncondensables in order to preserve system efficiency and prevent damage. The drawbacks of purge units are that they are another component that requires service, and they also release small amounts of refrigerant to the atmosphere as they remove the noncondensables. Due to the increasing price of refrigerants and the ever-increasing emphasis on the environment, high-efficiency purge units have been developed.

Most high-efficiency purge units come with microprocessor-based data logging and diagnostic capabilities. The function of a purge unit is to maintain a system free of air and moisture. Moisture can cause the formation of acids that will attack the system's internal components. Removing noncondensables from a system restores peak efficiency and prevents the damage associated with acid formation. A purge unit runs only when needed, and should pump out noncondensables within 2 to 3 minutes. Cycle times that exceed this may indicate that the system has developed a significant leak.

Thinking Green

Upgrading to High-Efficiency Purge Units

Purge unit efficiency is determined in accordance with AHRI Standard 580. Older, inefficient purge units could release as much as 10 lb of refrigerant for every 1 lb of air removed. Some of today's high-efficiency purge units release less than 0.1 lb of refrigerant for every 1 lb of air purged.

Secondary Emission-Collection Devices

As previously mentioned, when purge units remove air from a system, a certain amount of refrigerant is removed with it. If the air is purged to the atmosphere, so is the refrigerant. If a secondary emission-collection device like a charcoal canister or molecular sieve canister is installed between the purge unit and vent, it can capture most of the refrigerant that escapes during the purging operation, preventing it from being released to the atmosphere. If a charcoal canister is used, the refrigerant it captures is nonrecoverable. The canister has a specific capacity and is replaced once it has reached that limit.

Thinking Green

Secondary Emission-Collection Devices

By using a secondary emission-collection device, like a charcoal canister, in combination with a high-efficiency purge unit, it is possible to reduce purging-related refrigerant emissions to less than 0.0005 lb of refrigerant for every pound of air purged from the system.

33.2.3 Chiller Compressors

Various types of compressors are used in chillers. Some of the more common types (reciprocating, scroll, screw, and centrifugal) are discussed in the following sections. Additional information on compressors can be found in Chapter 18, *Compressors*. As stated, the major difference between compressors used in chillers and those used in other applications is their size. Chiller compressors are generally much larger. The basic operation of the compressors is the same, however. The type of compressor used in an installation depends on the number of tons of air conditioning needed.

The motors that are used to drive chiller compressors can be either open-drive or closed-drive types. Open-drive motors are exposed and are cooled by air in the room. Open-drive motors produce a large amount of heat, which must be exhausted from the equipment room.

Closed-drive motors are hermetically sealed inside a case and are cooled by refrigerant. This reduces the amount of motor heat that radiates into the equipment room. Closed-drive motors are frequently used in 80-ton to 2000-ton systems.

Natural gas engines can also be used to drive chiller compressors. Scroll compressors and reciprocating compressors are used with natural gas engines in low-capacity systems of 30 tons or less. An engine-driven chiller system operates the same as any other chiller system. The only difference is the type of drive, **Figure 33-28**.

Copyright Goodheart-Willcox Co., Inc.

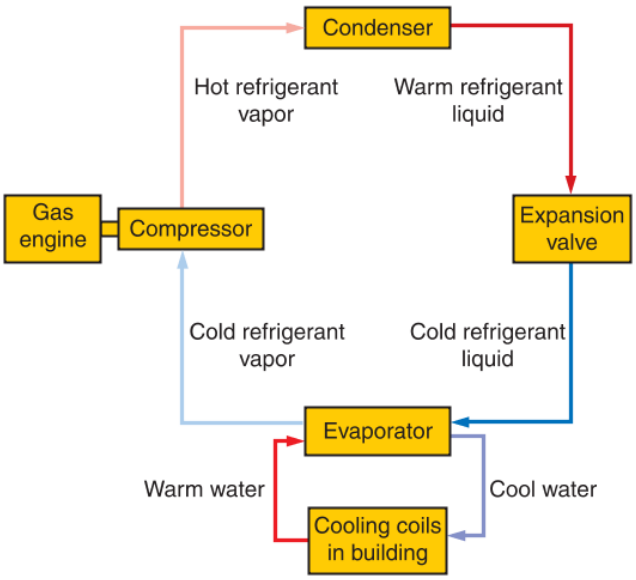

Tecogen, Inc.

Figure 33-28. This flowchart shows the operation of a chiller system that uses a natural gas engine to rotate the compressor.

Zero Zone, Inc.

Figure 33-29. Chiller system using multiple reciprocating compressors.

Reciprocating Compressor Chillers

Large reciprocating compressors operate like other reciprocating compressors. They are used in chiller systems with capacities ranging from 10 to 150 tons. These compressors can be either hermetic or semi-hermetic. The main benefits of reciprocating compressors are simple controls, low cost, and efficiency in low-capacity applications. However, the drawbacks to reciprocating compressors are greater maintenance requirements due to numerous moving parts and high levels of noise and vibration.

As many as twelve cylinders may be needed on a large reciprocating compressor in order to produce the needed pumping capacity. This makes large reciprocating compressors more costly and less energy efficient than other types of compressors with equivalent capacity. Therefore, most manufacturers no longer use one large reciprocating compressor in a system. Instead, multiple smaller compressors are used. This arrangement provides a backup if one compressor should fail. Multiple compressors also allow for increased capacity control and give operators the ability to maintain or service one compressor while the others remain in operation, **Figure 33-29**.

The refrigerants most frequently used with reciprocating systems are R-500, R-502, and R-134a. The elimination of R-12 and phaseout of R-22 has resulted in newer, more-efficient systems that operate on R-410A and R-407C.

Reciprocating compressors have many moving parts that create a lot of friction. A pressure lubrication system is included on all reciprocating compressors 5 hp and over. The majority of wear on a compressor occurs during start-up because the oil pressure has not yet been established. The compressor must be running in order for lubricants to reach many of the high-friction areas of the compressor. It is necessary to reduce pumping capacity on start-up in order to reduce the load on poorly lubricated surfaces and to alleviate temperature fluctuations and unnecessary cycling of the unit.

Cylinder Unloading

Cylinder unloading is the disabling or reducing of a reciprocating compressor's cylinder pumping ability. Unloading one or more of the compressor cylinders reduces the overall capacity of a reciprocating chiller. For example, if a compressor has eight cylinders and the cylinders are unloaded in pairs, the capacity would decrease by 25% per unloading step:

- 8 cylinders operating = 100% capacity
- 6 operating, 2 unloaded = 75% capacity
- 4 operating, 4 unloaded = 50% capacity
- 2 operating, 6 unloaded = 25% capacity

Compressors are designed so that it is not possible to unload all of the cylinders at the same time. If all of the cylinders were unloaded, the compressor could not move any refrigerant through the system. As a result, no oil would circulate back to the compressor. Since it would be without proper lubrication, the compressor would be damaged quickly.

Copyright Goodheart-Willcox Co., Inc.

Compressors will usually unload down to 25% to 50% of their full-load pumping capacity. Cylinder unloading reduces power consumption, since power consumption is directly related to amperage draw of the compressor motor. Pumping less refrigerant requires less compressor motor amperage, which reduces electrical power consumption.

There are different methods of cylinder unloading. Two common methods are to block a cylinder's intake passage or to hold open a cylinder's suction intake valve. A cylinder can be unloaded by using a solenoid valve to block the suction passage to a cylinder. This prevents vapor from reaching the cylinder, **Figure 33-30**.

Suction valve lifting refers to holding the suction valve open while the compressor is pumping. When the suction valve is held open, refrigerant is drawn into the cylinder normally on the intake stroke, but is forced back through the suction valve during the compression stroke. Since pressure is lower on the suction side where the intake valve is held open, refrigerant flows back, rather than pushing through into the discharge line. This action causes that cylinder to quit pumping.

With either unloading method, the pressure on the cylinder walls and bearings in the compressor is reduced, decreasing friction. This helps reduce wear on the compressor during start-up. Because the piston still moves up and down, oil pressure builds, and the lubrication system begins working even though the cylinder is not pumping. When the oil pressure reaches normal levels, the cylinder unloader can be deactivated so that the cylinder will begin pumping normally again. In addition to reducing load during start-up, cylinder unloaders can also be used to decrease system capacity in order to reduce refrigeration effect when it is not needed. Unloaders can also be used to reduce electrical power consumption.

Scroll Compressor Chillers

Scroll compressors are positive-displacement compressors. They are welded-hermetic units and have capacities in the 10- to 25-ton range. In multiple-compressor chiller systems, capacity control is maintained by cycling the compressors on and off in increments of 10 and 15 tons. For example, a 25-ton chiller would be equipped with a 10-ton and a 15-ton compressor. Capacity would be controlled by running both compressors, running just the 10-ton compressor, or running just the 15-ton compressor. See **Figure 33-31**.

A scroll compressor contains two matching spiral scrolls. One is attached to a flat base and faces one direction. The other scroll faces the other direction and is connected to the motor by a turning assembly, **Figure 33-32**.

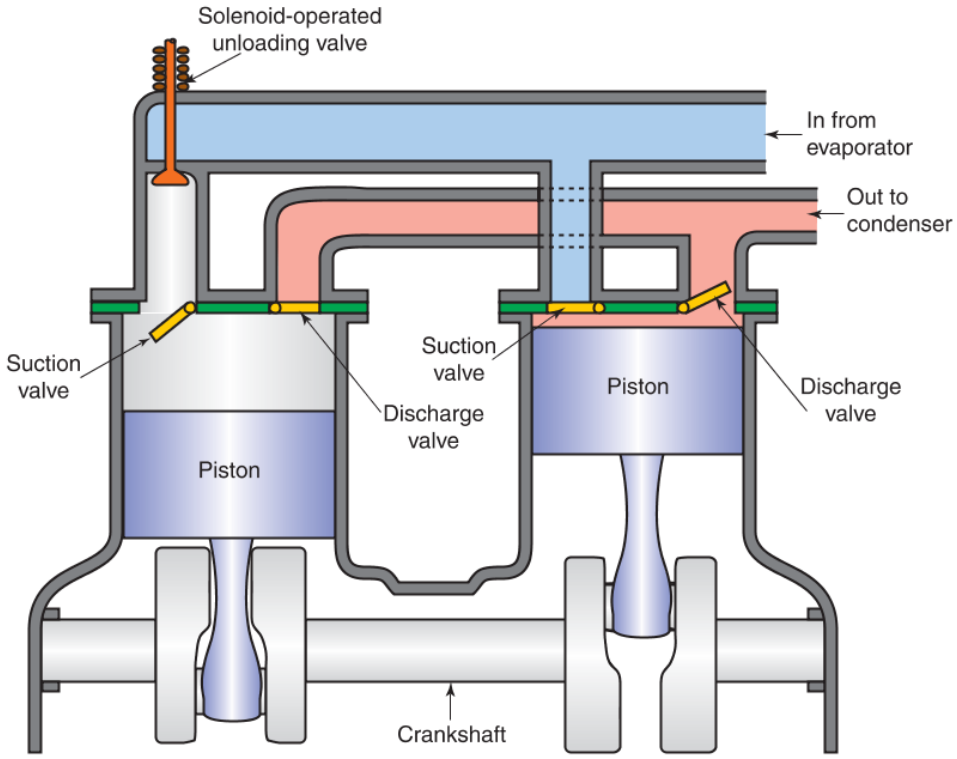

Goodheart-Willcox Publisher

Figure 33-30. In this cylinder unloader, a solenoid-operated valve closes the intake passage.

Copyright Goodheart-Willcox Co., Inc.

The two scrolls are sandwiched together, which creates pockets of space along the scroll walls. One scroll orbits around the stationary scroll. As gas enters the scroll, it is progressively compressed into a smaller pocket (volume). When the refrigerant vapor arrives at the center of the scrolls, it is compressed to the maximum capabilities of the compressor. It is then discharged out of compressor, **Figure 33-33**.

Scroll compressors are becoming increasingly popular in comfort cooling. This is due in large part to their small size, light weight, smooth operation, and relatively high efficiency. They are also quiet, have few moving parts, and can pump small amounts of liquid refrigerant without compressor damage. The primary drawbacks of scroll compressors are that they cannot be repaired and that they may lose oil at low temperature.

Lubrication for a scroll compressor is provided by an oil pump located at the bottom of the crankshaft. A scroll compressor has a check valve to prevent backward flow of refrigerant when the system is shut down. This check valve is necessary to prevent an equalization of the high side to the low side of the system during the Off cycle.

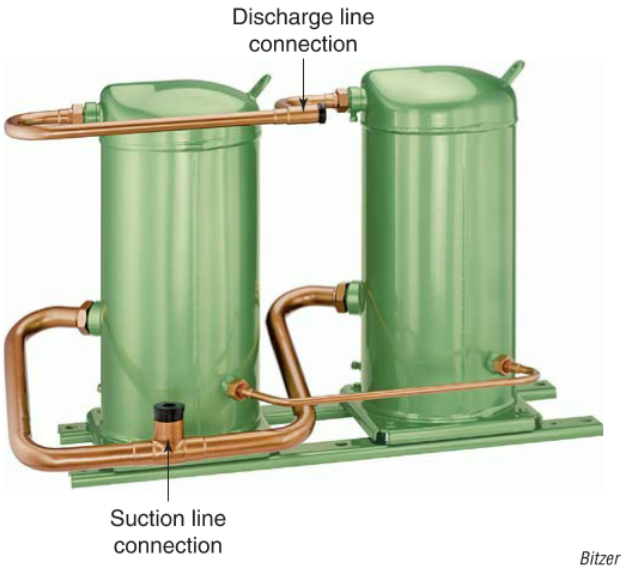

Bitzer

Figure 33-31. Tandem scroll compressor setup. Capacity can be adjusted by cycling compressors on and off as needed.

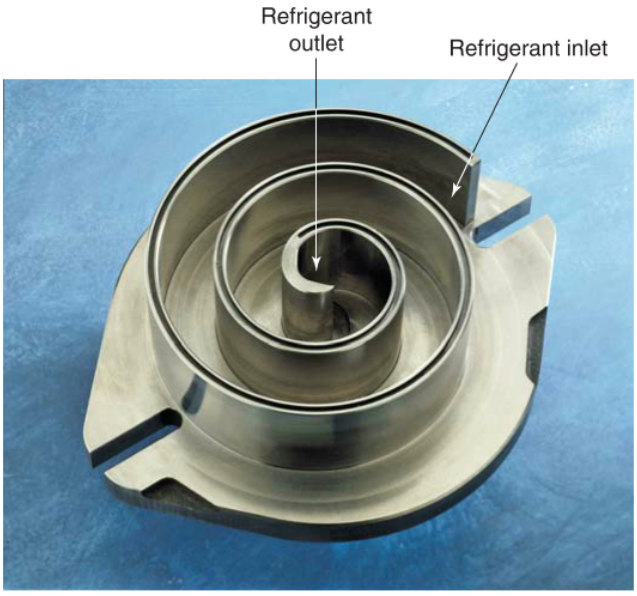

Danfoss

Figure 33-32. One of the scrolls used in a scroll compressor. Refrigerant vapor enters at the outside edge of a pair of scrolls and is gradually compressed as it travels toward the center of the scrolls.

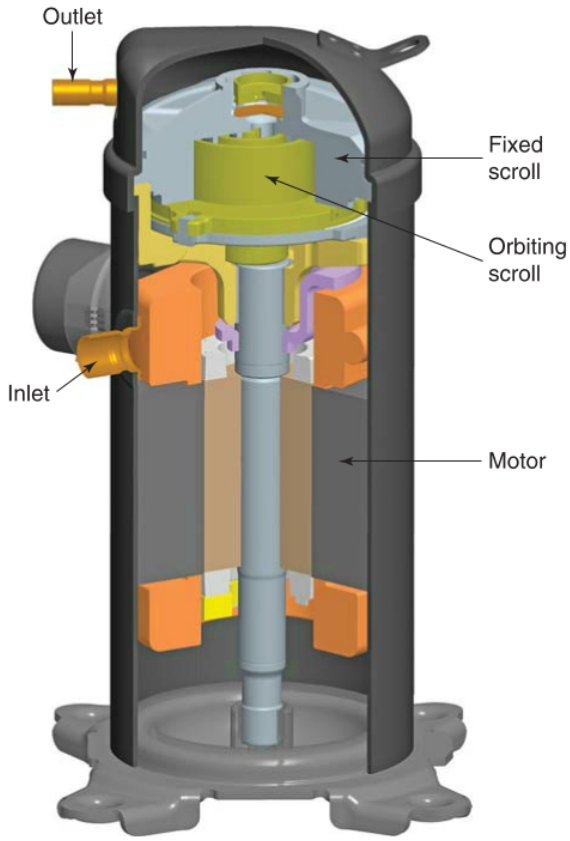

Danfoss

Figure 33-33. Hermetic scroll compressors often use the low-pressure suction vapor to cool the motor windings before the vapor is compressed to the high side of the system.

10

Copyright Goodheart-Willcox Co., Inc.

Screw Compressor Chillers

Screw compressors are most often used for larger-capacity chiller applications. These compressors are available in capacities up to 750 tons and require the use of high-pressure refrigerants. There are a number of benefits associated with screw compressors. These include a high output capacity, few moving parts, and the ability to pump some liquid refrigerant without being damaged. Since few compressors are needed to achieve high output, they offer greater piping flexibility. In addition, such systems require less interconnecting piping, thereby lowering assembly time and costs, **Figure 33-34**.

The capacity of most screw compressors is controlled with a slide valve. The slide valve blocks suction gas prior to its entering the screws. The slide valve can adjust capacity from 10% to 100% of the load.

Screw compressors pump a large amount of oil while compressing refrigerant. Excessive oil in the system will result in poor heat exchange and a loss of capacity. An oil separator is used to return oil to the compressor reservoir. Pressure differential moves the oil through the rotating parts of the compressor.

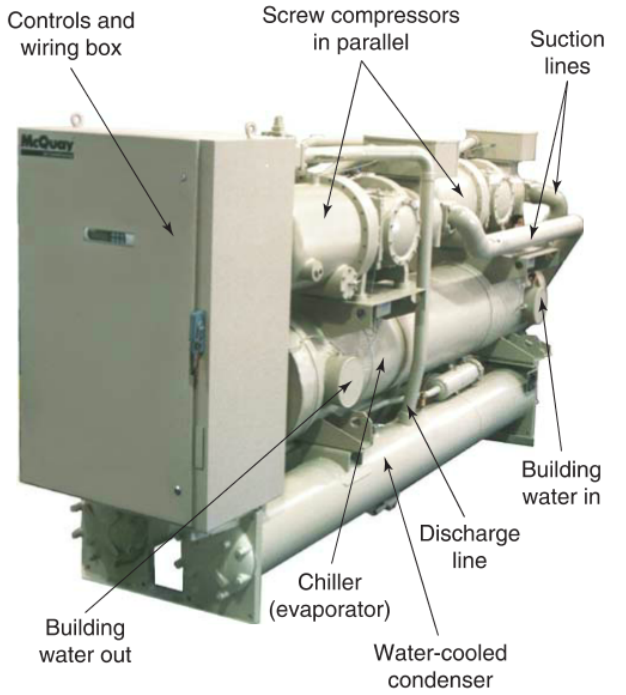

McQuay International

Figure 33-34. Chiller using two screw compressors connected in parallel and a water-cooled condenser that connects to a cooling tower.

Centrifugal Compressor Chillers

Many large comfort cooling installations use centrifugal compressors due to their cost effectiveness for large loads (150 tons and up). An additional benefit of these compressors is their simple design and small number of moving parts. Centrifugal compressor chillers can provide up to 2000 tons of cooling capacity with a single compressor assembly; however, assemblies can have more than one compressor, **Figure 33-35**.

Centrifugal compressor chillers use low-pressure refrigerants, such as R-123. The evaporator in a system with a centrifugal compressor operates at below-atmospheric pressure. These chillers have the capability of handling large volumes of refrigerant. They use centrifugal force to compress the refrigerant and move it from the low side to the high side of the system. An impeller similar to a large fan creates a pressure differential from one side of the compressor (inlet pipe) to the other (outlet pipe), **Figure 33-36**.

A high rotational speed is needed to generate sufficient centrifugal force to adequately compress the refrigerant vapor. In order to achieve that speed, a gearbox is installed between the motor and compressor. The gearbox has two gears: a drive gear and a driven gear. The drive gear is the larger gear, and the driven gear is the smaller gear. Being smaller, the driven gear turns the faster of the two. The shaft of the motor is connected to the drive gear, and the compressor's impeller shaft is connected to the driven gear. Because of the gearbox, the motor is able to turn the compressor impeller at approximately 20,000–25,000 rpm. This is much faster than the motor itself spins.

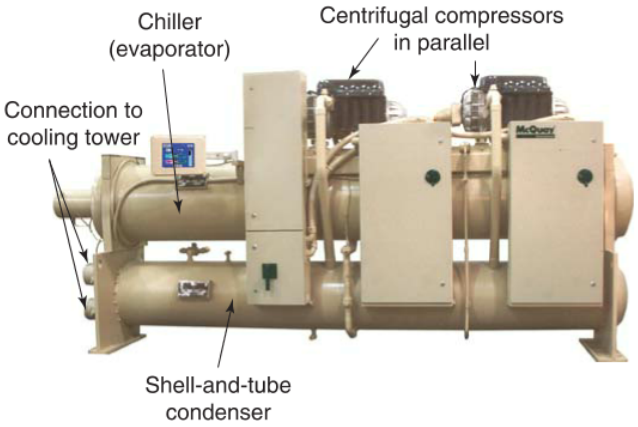

McQuay International

Figure 33-35. Chiller using two centrifugal compressors connected in parallel and a water-cooled condenser that connects to a cooling tower.

Copyright Goodheart-Willcox Co., Inc.

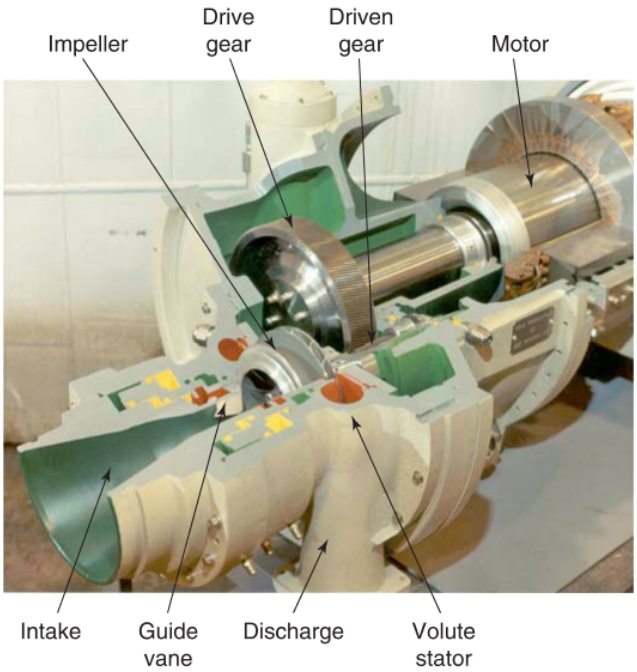

McQuay International

Figure 33-36. This cutaway shows the inner parts of a centrifugal compressor. The motor turns the impeller, which draws in and compresses refrigerant. Because the drive gear is much larger than the driven gear, the impeller spins much faster than the motor turns.

Figure 33-37 shows a typical centrifugal compressor chiller system. Both the condenser and the evaporator have a shell-and-tube type build. The compressor is a two-stage (dual compressor) centrifugal unit, driven by a hermetically sealed motor. Two-stage chillers take up less floor space and are less expensive to install than a setup of multiple single-stage compressors with the same capacity. This is due to elimination of piping to a second chiller and pumps, fewer valves and controls, and less rigging costs. Since multiple stages are used, each stage has less work to do. The lower compression ratios in each stage result in lower operating temperatures and greater efficiency.

A ***compression chiller economizer*** improves system efficiency by subcooling high-side refrigerant before it enters the evaporator. Refrigerant from the compressor passes through a metering device before it enters the economizer. This reduces the pressure of the liquid refrigerant. Some of the refrigerant flashes off, which subcools the remaining refrigerant. The flash gas is diverted to the space between the first stage and second stage of the compressor, where it mixes with the refrigerant vapor leaving the first compressor stage. The cooled liquid from the economizer passes through a second metering device and enters the evaporator. Since the refrigerant has been subcooled in the economizer, it is able to absorb more heat before vaporizing in the evaporator.

Lubrication System

A separate motor drives an oil pump that provides lubrication to a centrifugal compressor. This is usually accomplished by a 1/4 hp, three-phase motor inside the oil sump. Because the oil pump is driven by a separate motor, the lubrication system can deliver oil to the critical parts of the compressor and gearbox even before the compressor motor begins spinning and while the compressor is coasting down at the end of the compression cycle.

The lubrication system is a sealed system. Oil is not mixed with the refrigerant. A heater is located in the oil sump to help reduce refrigerant migration when the system is off. However, some liquid refrigerant will migrate to the sump, causing foaming for a few minutes after start-up. The compressor should be run at a reduced load until the foaming in the oil is reduced.

During operation, the oil is heated as it passes through the system lubrication components. The oil also absorbs heat from the bearings. The oil in the sump will reach 140°F to 160°F (60°C to 71°C). An oil cooler prevents the oil from overheating during operation. In the oil cooler, the oil is cooled to approximately 120°F (49°C).

Pro Tip

Centrifugal Compressor with Magnetic Bearings

Some centrifugal compressors ride on frictionless magnetic bearings. These compressors require no lubricant. They are driven by a direct-drive variable speed dc motor. Capacities of this type of compressor range from 60 to 300 tons. Such units are designed for indoor nonfreezing installation only.

Capacity Control

The capacity of a centrifugal compressor is controlled by adjusting guide vanes at the center of the impeller eye. The guide vanes are often referred to as inlet guide vanes, and they serve two purposes. They control the amount of refrigerant allowed to enter the compressor, and they create a rotational flow in the refrigerant that matches the rotation of the impeller. This reduces the drag on the compressor as the refrigerant enters.

A controller notes the operating conditions and sets the position of the inlet guide vanes accordingly. The guide vanes are operated by a pneumatic or electric motor. As vanes close, the entry angle of the gas to the impeller changes. This reduces gas flow as well as compressor capacity. When the guide vanes are closed,

Copyright Goodheart-Willcox Co., Inc.

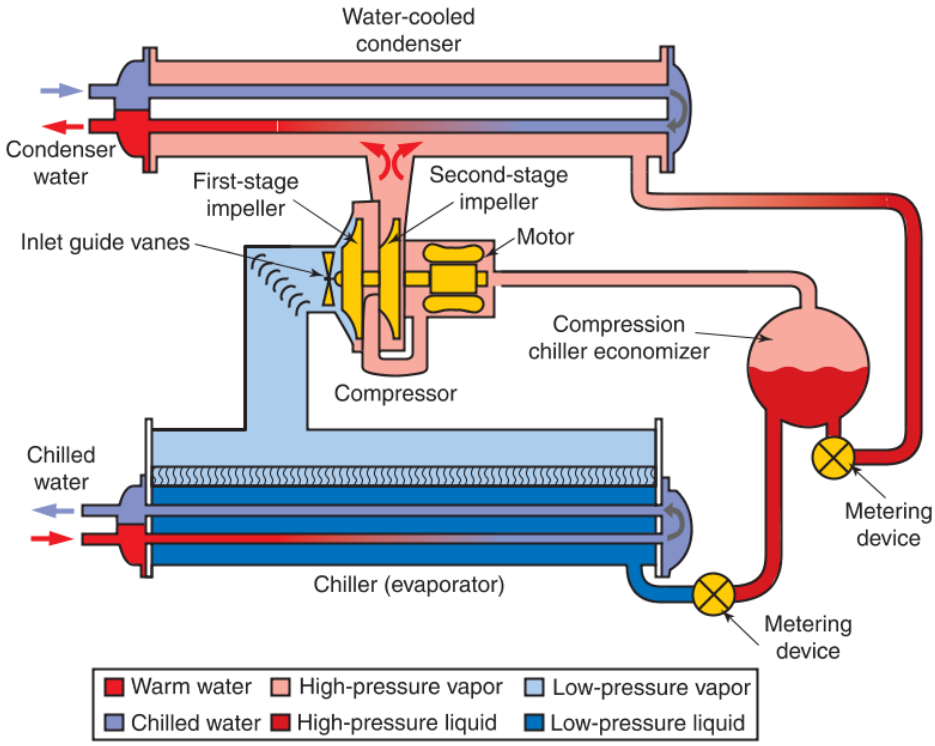

Carrier Corporation, Subsidiary of United Technologies Corporation

Figure 33-37. This drawing shows the arrangement of the centrifugal compressor, condenser, and evaporator in a chiller system. A compression chiller economizer is often used to allow removal of flash gas in the evaporator, increasing the effect of each pound of refrigerant and reducing the compressor power requirement.

the compressor pumps at 15%–20% of its rated capacity. When the guide vanes are open, the compressor pumps at 100% of its capacity. Inlet guide vanes are automatically closed during start-up to reduce the starting load.

Operation

Most centrifugal compressor chillers use a controller to adjust the refrigerant cycle as needed. Fluid flow controls stop the system if chilled water flow ceases in a chiller. Pressure sensors and thermistors are placed throughout the system to monitor conditions. Controls may be interfaced with a personal computer to operate and maintain a chiller system.

Caution

Centrifugal Compressor Motor Rotation

The direction of motor rotation is critical in a centrifugal compressor chiller. If a motor starts in the wrong direction, it could damage the compressor. These motors produce a large amount of heat, which must be exhausted from the equipment room.

33.3 Cooling Towers

Some water-cooled condensers use tap water for cooling. This water is circulated through the condenser's water circuit and then discharged into the sewer. Such an arrangement uses large amounts of water, which is wasteful and may be expensive. Moreover, many places do not allow the use of tap water for cooling condensers. Rather than consuming a constant demand for fresh water, engineers have devised methods of using a set amount of water for cooling a condenser over and over again. This device is a cooling tower.

A ***cooling tower*** is a structure that removes heat from the cooling water of an HVACR system using the evaporation of water. Cooling water used in water-cooled condensers is circulated through a cooling tower to be cooled and recirculated for reuse. Water exposed to flowing air promotes evaporation. As water evaporates, it absorbs heat, which produces the cooling effect passed on to the remaining water, **Figure 33-38**.

A cooling tower is a housing or shed into which air is drawn. It has a series of spray nozzles or drain

Copyright Goodheart-Willcox Co., Inc.

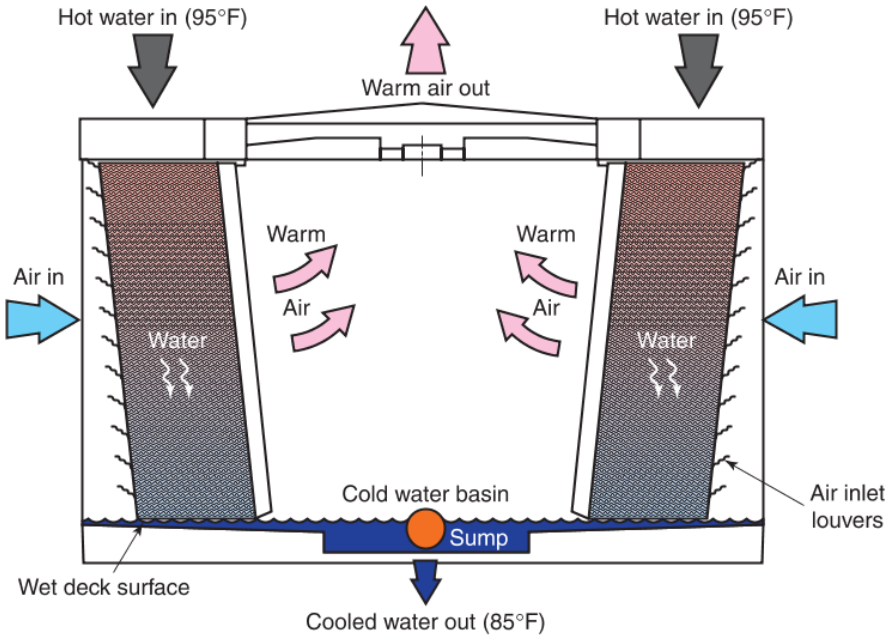

Baltimore Aircoil Company

Figure 33-38. Diagram showing the operation of a typical cooling tower.

holes and baffled material fill. Water from the condenser is routed through the cooling tower, where it is drops through the tower. As the water is exposed to the stream of air, some of it evaporates, and the rest of the water cools.

The cooled water collects in a reservoir at the bottom of the cooling tower. A float in the reservoir controls a shutoff valve in a water supply line. If the water level in the reservoir drops below a minimum level, the float opens the water supply shutoff valve, allowing water to fill the reservoir. As the reservoir fills, the float rises, gradually closing the shutoff valve. A water pump draws cooled water from the reservoir and circulates it through the condenser, **Figure 33-39**.

Cooling towers are available in a great range of sizes. Small ones may be used to cool the water-cooled condensers for a medium-sized commercial air conditioner. Very large ones are required for cooling the condenser water in large steam power plants. **Figure 33-40** shows a complete air-conditioning system equipped with a cooling tower.

Cooling towers use evaporation to reduce the temperature of the water circulating through a condenser. The effectiveness of a cooling tower is partly dependent on the humidity of the air flowing through it. The less humid the air is, the greater the cooling potential provided through evaporation. Because of the cooling effect of evaporation, a cooling tower can cool water to a level below that of the surrounding air temperature. An equal amount of water can transfer more Btus heat than an equal amount of air. For these reasons, water makes an excellent cooling medium in HVACR applications.

For many cooling tower systems, hot vapor refrigerant condenses in the condenser around 105°F (40.5°C). Cooling tower water enters the condenser at 85°F (29.4°C). It absorbs about 10°F (6°C) of sensible heat in the condenser before circulating back to the cooling tower at 95°F (35°C). Through evaporation, the remaining water cools 10°F (6°C) back to 85°F (29.4°C), before flowing through the cycle again. When outdoor air temperature is cooler, water temperature can drop even more. In general, the cooler the cooling water to the condenser, the more heat it can absorb. The more heat that can be absorbed by the cooling water, the greater the subcooling and the more efficient system operation becomes.

As a cooling tower operates, water is lost in a variety of ways. Some water evaporates while cooling the rest of the water. Some water is broken into droplets small enough to be caught in a draft and carried out through the louvers. Water loss in this manner is called ***drift***. Some water is intentionally drained for the purpose of reducing certain mineral concentrations in the water. This is called ***blowdown***. Water vapor, drift, and blowdown eventually lower the water level in the cooling tower sump enough that a float switch opens a valve to allow ***makeup water*** to replace what was lost.

Copyright Goodheart-Willcox Co., Inc.

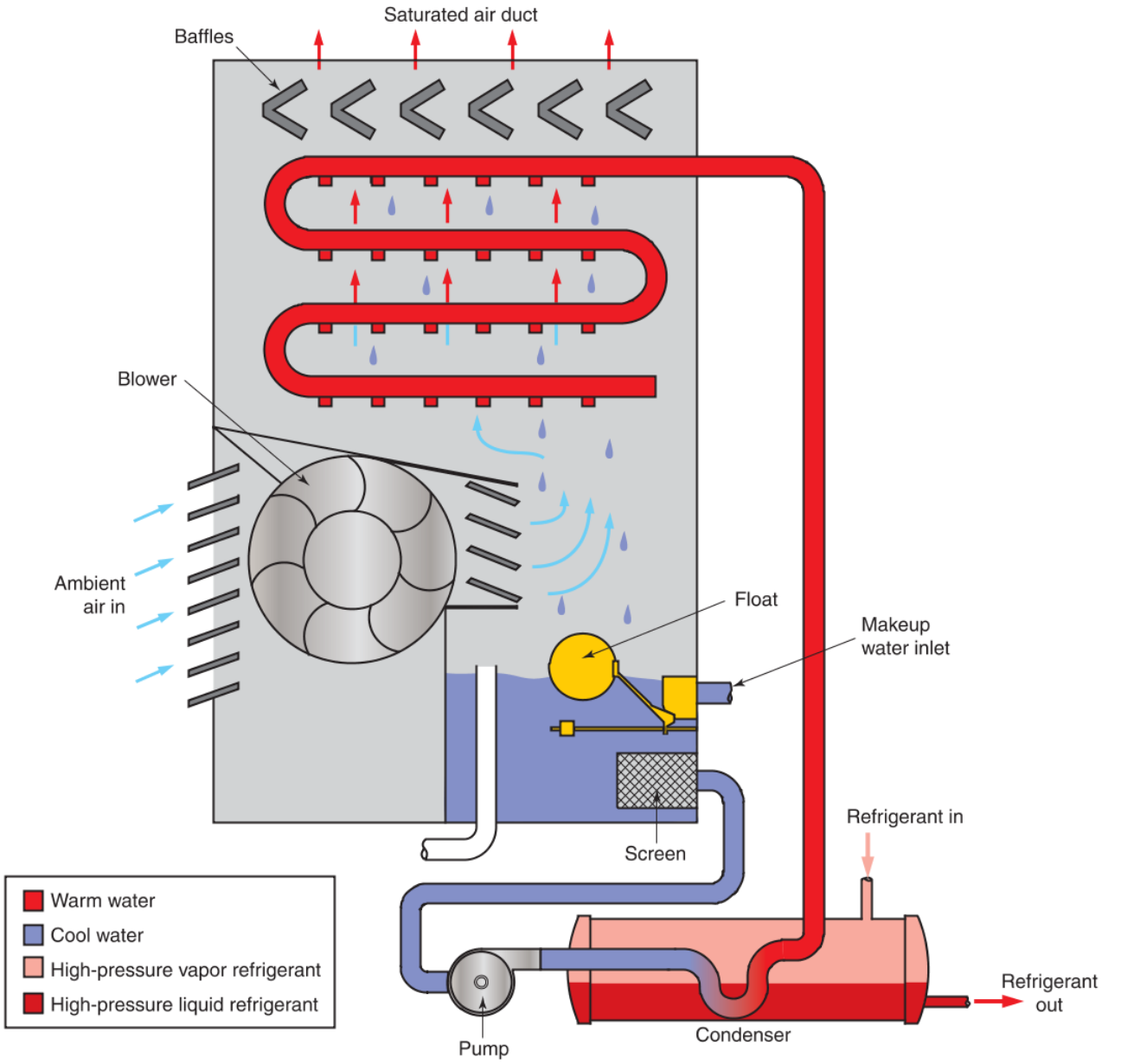

Goodheart-Willcox Publisher

Figure 33-39. The operation of a typical cooling tower is shown here. The cooling tower cools the condenser water, which is then circulated through a condenser to condense and subcool the refrigerant.

Thinking Green

Old and New Water Cooling Systems

Older cooling systems only cycled water through their systems once before exhausting or draining the water. Compared to older systems, modern cooling towers use significantly less water by cooling and recirculating the same water over and over. Reusing cooled water is more environmentally conscious and cost-efficient than older water-cooled systems.

33.3.1 Cooling Tower Construction

For cooling and evaporation to occur, moving air must contact cooling tower water. The larger the amount of water surface area that flowing air contacts, the more evaporation will occur. To increase contact between air and water, structures called ***wet decks*** are placed within cooling towers, **Figure 33-41**.

Wet decks are designed to maximize water and air contact. They are made of components called fill.

Copyright Goodheart-Willcox Co., Inc.

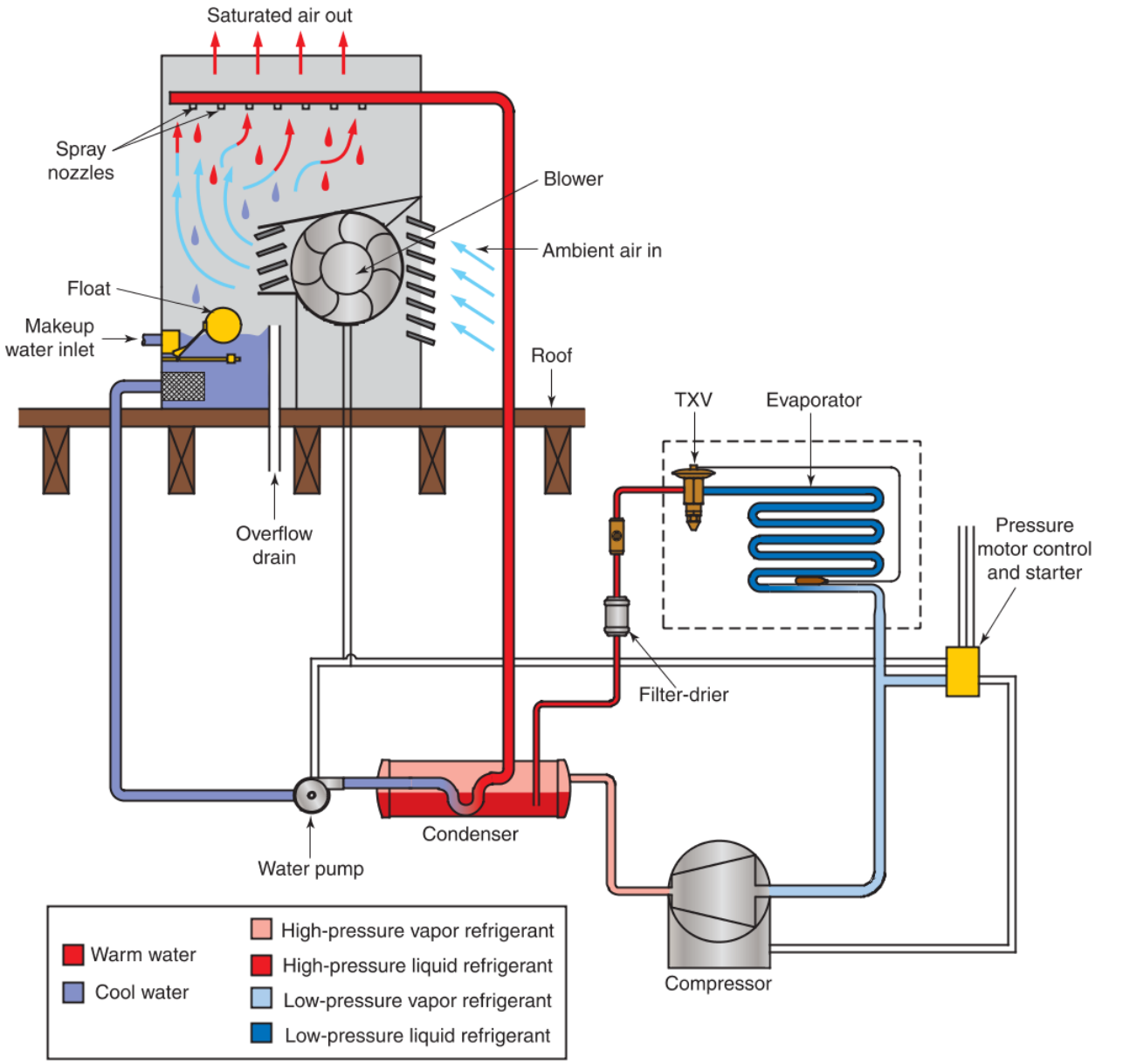

Goodheart-Willcox Publisher

Figure 33-40. An air-conditioning installation using cooling tower.

Fill is a specially designed sheet or structure with different ridges, corrugations, or designs used to increase air-water contact with the lowest possible air-pressure drop. Fill can be wood slats, thin plastic sheets, or other materials. The more water surface in contact with the air flowing through a cooling tower, the more efficient the cooling.

Some installations use the surface of the unit for a water trough. These applications may use wave-formed sheets of galvanized or stainless steel or slats of plastic or wood. Fill made of these materials is designed to be more open to prevent clogging and allow easy access for cleaning by maintenance personnel.

Water in a cooling tower can be distributed over the fill by one of two methods: pressured water system or gravity flow basin. A ***pressured water system*** is a collection of components used in a cooling tower that pumps water through pipes and out of spray heads along the top of wet decks, **Figure 33-42**.

A ***gravity flow basin*** is a water-filled container on top of a cooling tower that has precision holes through which accumulated water flows onto wet

Copyright Goodheart-Willcox Co., Inc.

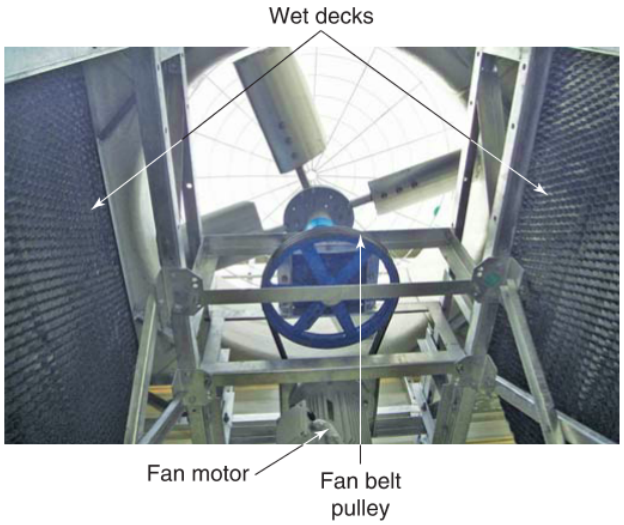

SPX Corporation

Figure 33-41. Upward view from the inside of a cooling tower shows the motor-driven fan and belt assembly in the center and wet decks along each side.

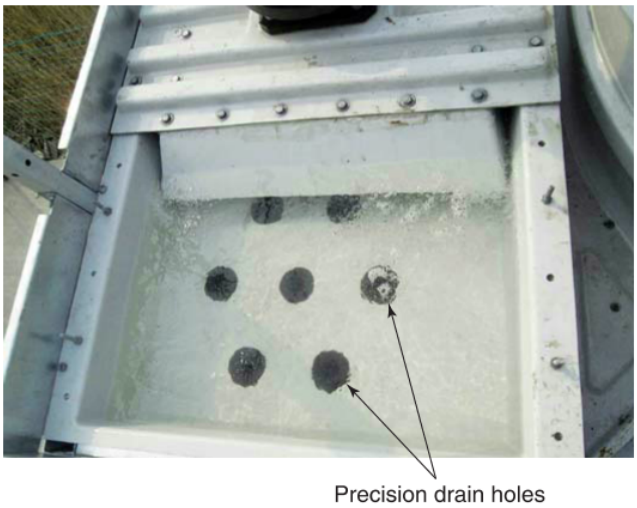

SPX Corporation

Figure 33-43. Overhead view of a fiberglass cooling tower showing the gravity flow basin filled with water passing through precision holes and onto the fill (unseen) below.

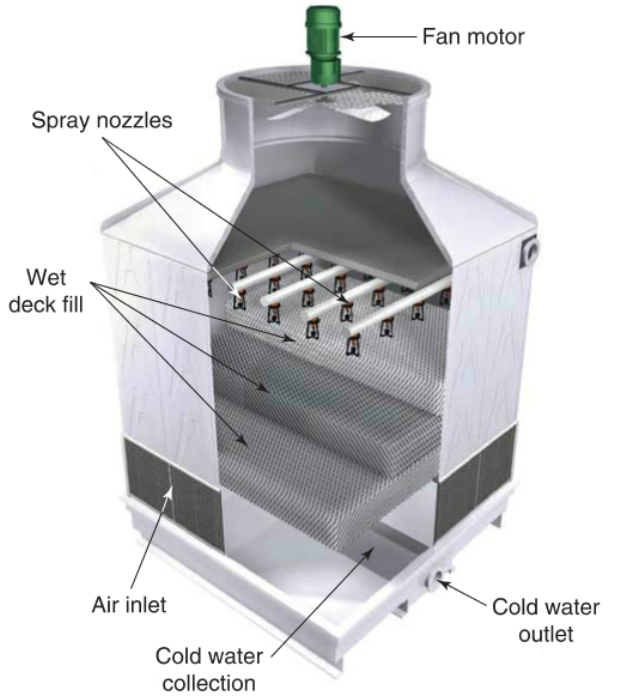

SPX Corporation

Figure 33-42. Counterflow cooling tower cutaway shows wet deck fill onto which the spray nozzles release water for cooling.

decks, **Figure 33-43**. Either type of water distribution system must be inspected regularly and kept clean in order to distribute the water evenly. Proper distribution ensures full thermal performance and prevents scale buildup.

Cooling towers are made of corrosion-resistant materials. Combinations of materials are increasingly popular, such as welded type 304 stainless steel basins with the remainder of the tower above the water line fabricated of galvanized steel. Coatings are also used over galvanized steel to help extend equipment life. The most common materials are galvanized steel, stainless steel, fiberglass, plastic, and treated wood, **Figure 33-44**.

Code Alert

Rooftop Cooling Tower Construction

The International Building Code (IBC) specifies certain restrictions regarding rooftop cooling towers. Rooftop cooling towers with over 250 ft^2 of capacity or being taller than 15′ must be constructed of noncombustible materials. The exception is fill made of wood at least 1″ thick may be used as long as the exterior of the tower is a noncombustible material. Also, the base of a rooftop cooling tower cannot be greater than 1/3 of the area of the supporting roof deck.

Cooling Tower Water Circuits

Cooling towers are designed to have one of two types of water circuits: open loop or closed loop. In an ***open-loop cooling tower***, the water from the condenser flows into the cooling tower and over the wet decks and fill directly. This water is then recirculated through the condenser before returning to the cooling tower. The condenser and cooling tower share the same water. In open-loop circuits, some of the water will be lost to evaporation, drafts, or draining.

Copyright Goodheart-Willcox Co., Inc.

SPX Corporation

Figure 33-44. This crossflow cooling tower with vertical discharge has a fiberglass construction.

In a ***closed-loop cooling tower***, the water in the condenser carries its absorbed heat into a heat exchanger that passes the heat into a separate stream of water that flows through the cooling tower. This separate cooling tower water flows over the wet decks and fill to release the heat from the system. Condenser water and cooling tower water are separate and exclusive. They never mix or contact each other. Condenser water remains in a single circuit, consisting of the condenser and one part of the heat exchanger. Cooling tower water remains in a single circuit, consisting of the cooling tower and the other part of the heat exchanger.

A closed-loop circuit allows far fewer contaminants into the condenser water loop than an open-loop circuit. In a closed-loop system, condenser tube cleaning can be performed much less frequently than in an open-loop system.

Cooling Tower Airflow Designs

Cooling towers can have one of two different airflow designs. In a ***counterflow cooling tower***, air and water travel in opposite directions. Water enters from above and drops downward to the sump or cold water basin. Air enters from the lower part of the tower and flows upward to exit at the top. Air and water flow counter to each other (in opposite directions), **Figure 33-45**.

In a ***crossflow cooling tower***, air flows across the wet deck from side to side, while water drops downward from above. The air and water cross each other's path. Crossflow cooling towers can often be identified as using entire side walls as air inlets, **Figure 33-46**.

SPX Corporation

Figure 33-45. Counterflow cooling towers have air inlets near the bottom of their structure. Air flows upward against the downward flow of the water from above.

Baltimore Aircoil Company

Figure 33-46. A dual inlet crossflow cooling tower with vertical discharge.

Cooling Tower Draft Options

A ***natural-draft cooling tower*** relies on wind and natural convection to blow through the tower to aid evaporation. A natural-draft tower must be bigger than a forced-draft cooling tower in order to have the same amount of cooling capacity. However, natural-draft towers have a lower operating cost, as no energy is consumed in moving air through the tower.

Copyright Goodheart-Willcox Co., Inc.

An ***induced-draft cooling tower*** uses a fan placed at the air exhaust to draw air into the tower through a louver on an opposing side, across the wet deck, and out of the tower through the fan. Induced-draft fans always blow outward and away from the cooling tower. An induced-draft crossflow cooling tower would have its fan along the side wall that air exits the tower. An induced-draft counterflow cooling tower would have its fan mounted along the top of the tower.

A ***forced-draft cooling tower*** uses a fan placed at the air inlet. It draws air in through itself and blows it through and out of the tower. Forced-draft fans always blow directly into the tower. A forced-draft crossflow cooling tower would have its fan along the side wall where air enters the cooling tower. A forced-draft counterflow cooling tower would have its fan mounted on the lower part of the tower where air enters.

Thinking Green

Cooling Tower Efficiency

Cooling tower efficiency can be maximized by using variable speed fans rather than adjustable louvers to control airflow through the tower. Controlling airflow by restricting the air intake is inefficient and places an unnecessary load on the fan motors. Also, ensure that there is good water distribution through the tower. Replace any restricted spray nozzles with clog-resistant, corrosion-resistant nozzles.

33.3.2 Cooling Tower Operational Considerations

Cooling towers are an efficient way to release heat from an HVACR system or an industrial process. However, it is important for building owners and operators to be aware of the various aspects of maintenance and environmental concerns that are necessary for continuous operation.

Air and water vapor absorb latent and sensible heat from the water in cooling towers. When ambient air is already hot, less heat transfer occurs. To adjust for increased ambient temperature, either airflow or water flow must be increased. Humid air absorbs less heat, because it already has a high moisture content, making evaporation more difficult. Dry air is better for cooling tower operation, because it can absorb moisture more easily.

Code Alert

Cooling Towers

Because the vapor plumes from cooling towers can drift in the wind and affect other areas, the positioning of cooling towers is typically strictly regulated by local building codes. Codes also dictate proper anchorage and support of the tower and proper water supply and drainage piping to the tower.

Cooling Towers in Seasonally Cold Climates

Cold ambient temperatures and a low heat load can cause cooling tower water to freeze. Freezing typically starts in the corners with reduced heat load. Ice formation, which causes increased structural load, can damage cooling tower components. One solution is to continuously operate the tower with 40°F (4°C) water leaving the tower. ***Basin heaters*** are available to keep the water temperature up if the system is shut down in freezing temperatures. Piping may need insulation or electric heat tracing. Some systems have water reservoirs inside the building to protect the water from freezing weather. The reservoirs must be large enough to hold all the water in the system. In cold weather, chemicals can be added to the water in the condenser loop of closed systems; however, these chemicals usually are not added to cooling tower water. Do not run fans in reverse for de-icing.

Cooling Tower Capacity Controls

Airflow control can be used to change the cooling capacity as well as to protect the unit as outside air temperature drops. Airflow through a cooling tower can be controlled by cycling fan motors, using multispeed motors or variable frequency drives, or modulating the position of cooling tower louvers. To reduce cooling capacity, close cooling tower louvers, slow fan speed, or turn off fans. These are all ways of stopping or reducing the movement of air, which impedes evaporation and cooling.

Some cooling towers use a thermostatic water mixing valve that maintains a specific head pressure to control water-cooled condenser capacity. By regulating the temperature of the water returning from a cooling tower, condenser head pressure can be held constant. Water temperature regulation is done by mixing some of the cooled return water with hot condenser water that has not yet entered the cooling tower. Temperature is monitored at the condenser water inlet.

33.3.3 Water Valves

Water valves are used in systems having water-cooled condensers. ***Water valves*** stop, allow, and regulate the flow of water. In some cases, they can vary the amount of water proportional to the requirement of the system. A water valve is located between the water supply and the condenser. Usually, it is mounted on the condenser base.

Copyright Goodheart-Willcox Co., Inc.

Caution

Water Velocity

Water velocity should be 7 fps–10 fps (2 m/s–3 m/s). If flow is too fast, water may remove the oxide coating, causing pitting. If the water velocity is too slow, scaling can occur.

Water valves are categorized into groups by their operational control:

- Electric.
- Pressure.
- Thermostatic.

Pro Tip

Strainer in Water Inlets

It is good practice to install a strainer in the inlet to a water valve, **Figure 33-47**.

Electric Water Valves

Electric water valves may be either metered or nonmetered. Metered valves open the flow passage slowly with actuator rotation. This is useful when variable flow control is important. Non-metered valves open faster and fully so a large flow area is immediately available. Both types offer the benefit of minimal pressure drop in full flow application. Voltage level used for electric water valves may be low voltage or line voltage.

The bodies of electric water valves are normally brass. They are made with either threaded or soldered connections. Plungers are made of noncorrosive steel. Valve seats are usually made of brass or bronze. A special rubber composition is used for the valve face. The movement of an electric water valve's plunger is done by either a solenoid or motor.

Solenoid Water Valve

A ***solenoid water valve*** is an electric water valve that opens and closes by the operation of a solenoid. Like other water valves, it prevents water flow when the compressor is off and allows water flow when the compressor is on. Solenoid water valve operation is based on compressor operation. The moment the compressor starts, the solenoid water valve opens. When the compressor motor circuit is opened, the solenoid is de-energized, and the solenoid water valve closes. See **Figure 33-48**.

A solenoid water valve is either fully open or fully closed. It does not offer variable flow control, so it cannot open partially. **Figure 33-49** illustrates two typical electric water valve circuits. One uses a low-voltage solenoid valve. The other uses a 120 V solenoid valve. Most valves require 120 V.

A solenoid water valve with larger capacity may have the valve stem loosely connected to the plunger. This permits a shock action to open the valve. Gravity and water pressure close the valve when the power is shut off. Large-volume water flow may also be controlled by motor water valves.

Motor Water Valve

A ***motor water valve*** is an electric water valve that opens and closes by a motor. The inside of a motor-actuated water valve has a screen that may be cleaned or replaced by removing the cap on the bottom of the valve. These valves have capacities varying from 1/2″ to 4″ pipe size, **Figure 33-50**.

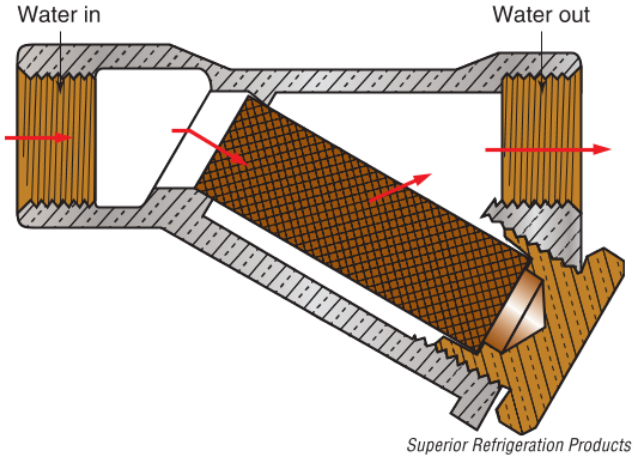

Superior Refrigeration Products

Figure 33-47. Water line strainer. Screen is removable for cleaning.

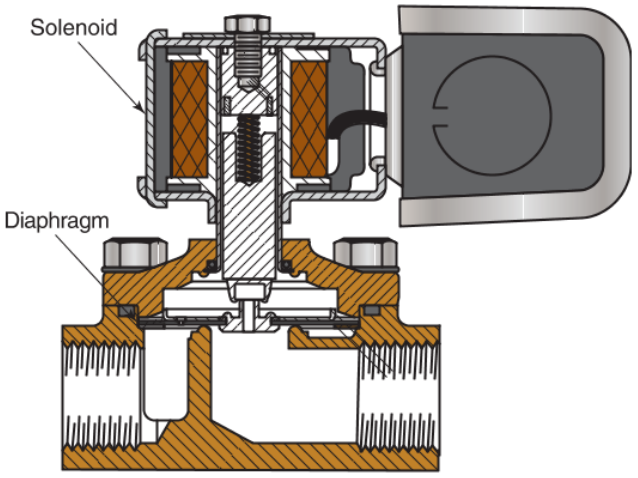

Courtesy of Sporlan Division - Parker Hannifin Corporation

Figure 33-48. A solenoid water valve deforms a diaphragm to either allow or prevent water flow.

Copyright Goodheart-Willcox Co., Inc.

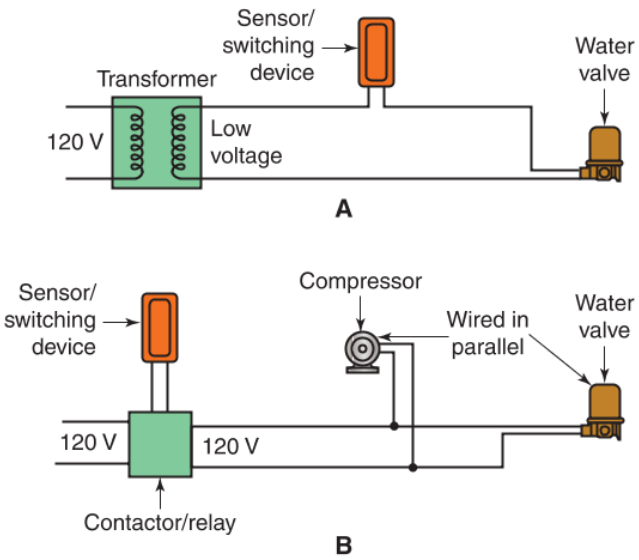

Goodheart-Willcox Publisher

Figure 33-49. Solenoid water valve wiring diagrams. A—Solenoid using low voltage. B—Solenoid using 120 V. The compressor and solenoid are wired in parallel.

Johnson Controls, Inc.

Figure 33-50. A motor raises or lowers the valve stem of this water valve.

Pressure Water Valves

A ***pressure water valve*** is a water valve that regulates water flow to a water-cooled condenser based on high-side pressure. An advantage of a pressure water valve is that it is able to maintain a constant head pressure. This is because it reacts according to high-side pressure, even when the system is cycled off. A pressure water valve's bellows are attached to high-side pressure, usually at the cylinder head. Pressure water valves are the most widely used water valves, **Figure 33-51**.

Variable control is provided by bellows that sense and react to pressure to control the valves. In other

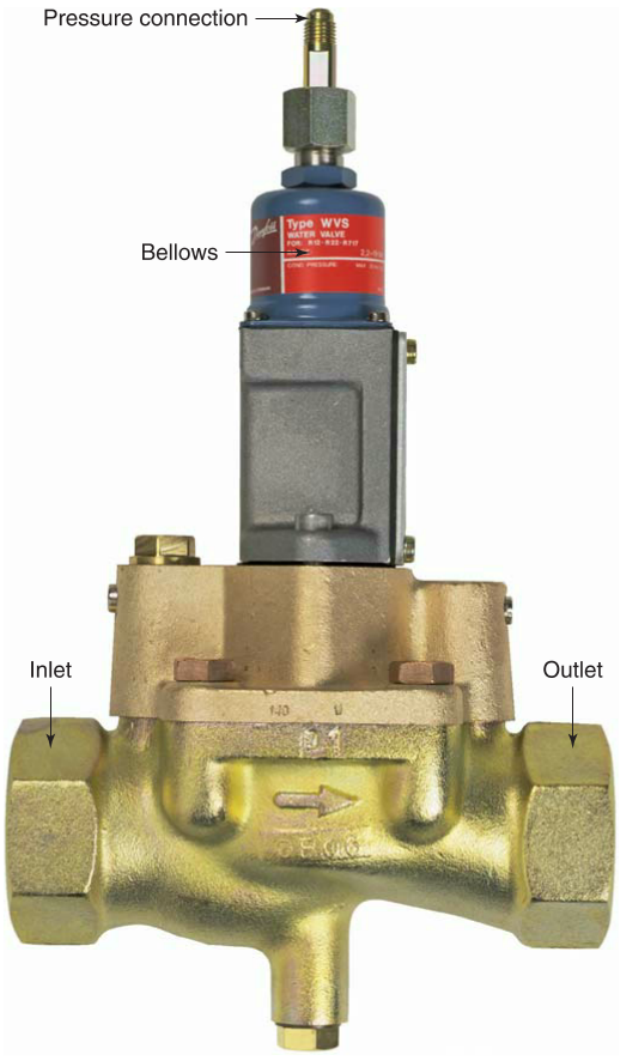

Danfoss

Figure 33-51. A pressure water valve is connected to the high-pressure side of an HVACR system at the compressor head. The rate of water flow can be varied by adjusting the spring pressure using a screw control on the valve.

Copyright Goodheart-Willcox Co., Inc.

words, the higher the head pressure pushing against the bellows, the more the pressure water valve will open and the more water will flow into the condenser. Instead of just preventing or allowing water flow at full blast, pressure water valves adjust the amount of water allowed to flow, depending on system head pressure.

As high-side pressure rises, the bellows in the water valve contract. Water flows into a condenser to cool and condense a system's high-pressure vapor. Pressure water valves open the water circuit only when cooling is needed, which is sensed when high-side pressure rises. Water flow will continue increasing as long as high-side pressure increases.

These valves may be adjusted using a heavy spring that presses against the bellows. The valves are set to open at specific head pressures. The pressure depends on the temperature of the water and the refrigerant used. Some pressure-controlled water designs require opening the system to remove the valve. Others may be removed without disturbing the refrigeration system.

The valve face is often made of a hard rubber composition or fiber. The seat is usually made of copper or brass. The valves are equipped with either a packing gland or a bellows. This is located where the water stem goes into the water valve body. The packing must be adjusted occasionally to keep it from leaking.

These valves usually do not depend on the pipe for support. They do, however, have a mounting arrangement or flange. The inlet and the outlet are clearly labeled. Valves are usually threaded for standard pipe connections. Most are constructed so that water pressure tends to keep the valve closed. The valves reduce incoming water pressure for protection of system components and to reduce water consumption. **Figure 33-52** shows a diagram of a large-capacity valve used on 1″ lines. This valve has a gear mechanism for adjusting the pressures.

Thermostatic Water Valves

A ***thermostatic water valve*** is a water valve that regulates water flow to a water-cooled condenser based on the temperature of condenser exhaust water. These valves are similar to pressure water valves except they

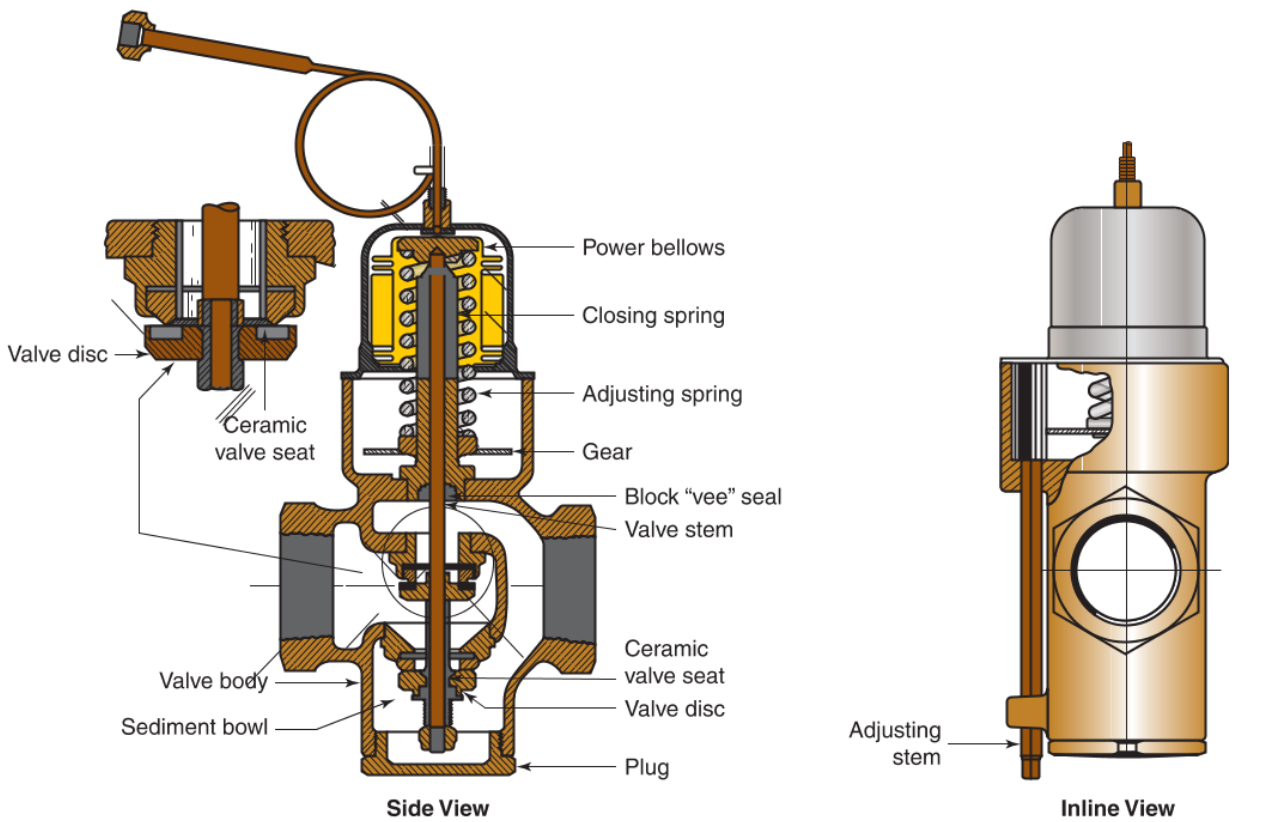

Goodheart-Willcox Publisher

Figure 33-52. Large capacity pressure water valve. Double valve and seat arrangement balances force from water pressure. One valve is opened and the other is closed by water pressure.

Copyright Goodheart-Willcox Co., Inc.

have a thermostatic sensing bulb connected to the bellows operating the valve, **Figure 33-53**.

The sensing bulb is charged with a volatile liquid and mounted in the condenser water line, where it reacts with the heat. Remember that a volatile liquid is one that easily changes into vapor when heat is absorbed. Heat from the condenser water is absorbed by the sensing bulb. The volatile liquid in the sensing bulb vaporizes and expands, pushing against the bellows. In the vaporization of the volatile liquid, heat energy is changed to pressure. As heat is absorbed into the sensing bulb, the pressure rises. This pressure opens the valve when the condenser water becomes warm. As the water cools, pressure is reduced, and the thermostatic water valve closes.

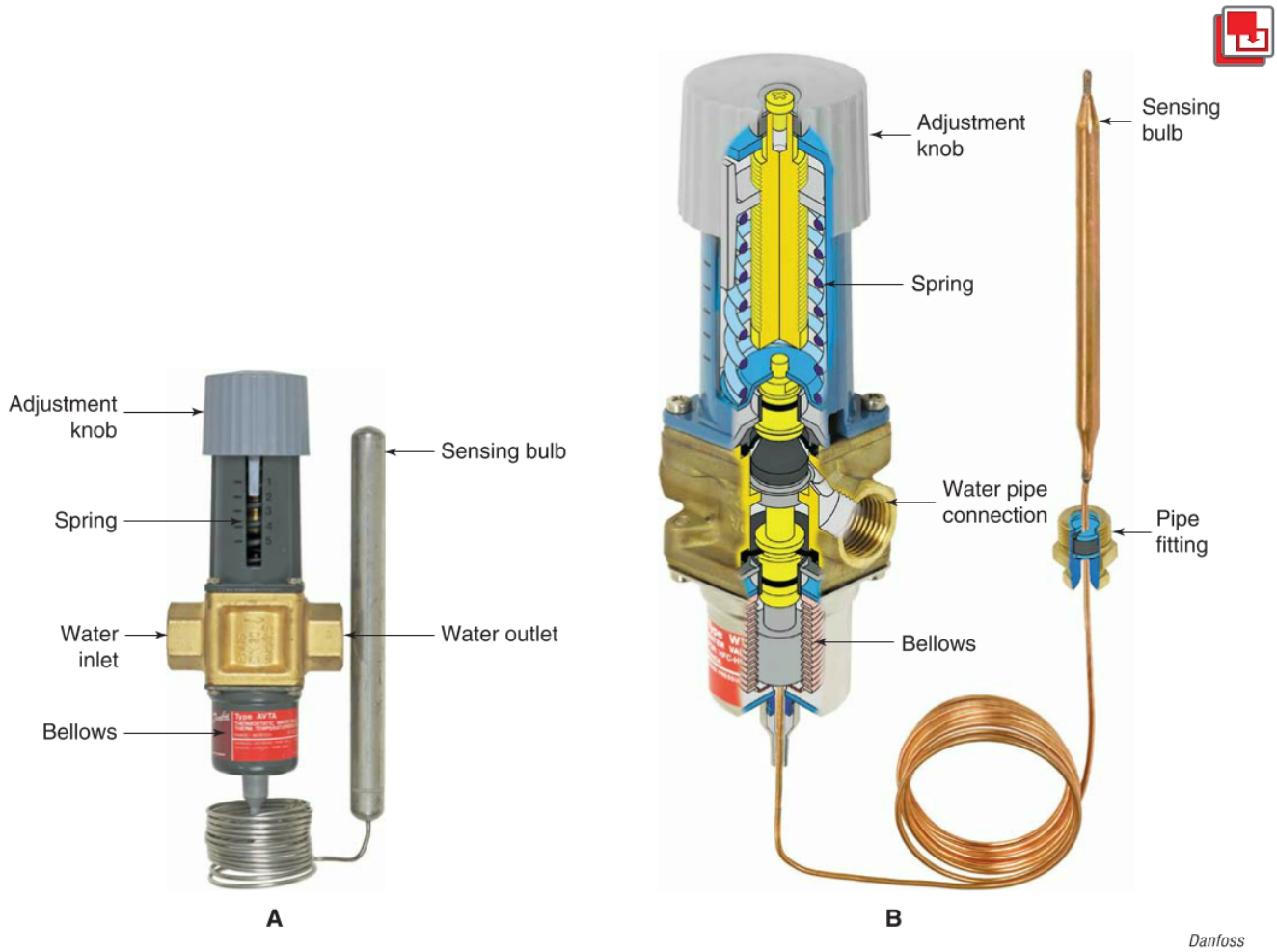

Figure 33-53. Note the sensing bulb and temperature adjustment knob on this thermostatic water valve. A—Thermostatic water valve. B—Cutaway of a thermostatic water valve.

Copyright Goodheart-Willcox Co., Inc.

Chapter Review

Summary

- A rooftop unit (RTU) is a packaged air-conditioning system designed specifically to be installed on the roof of a building. Many are designed to provide cooling and heating. Many also have a fresh air inlet to maintain indoor air quality and also an economizer that can provide free cooling when outdoor conditions are right.
- An RTU may provide heat through a gas-fired furnace, an oil-fired furnace, electric heating elements, or by operating as a heat pump. Cooling is provided by its mechanical refrigeration system. Air circulation is provided by a blower with multiple dampers responding to sensors and controls.
- When indoor temperature is warm but outdoor temperature and humidity are low, an RTU's economizer will turn on the blower and also position the dampers to draw in outdoor air for free cooling. Since the compressor does not run during this time, much less electrical power is used for efficient comfort cooling. An outdoor air temperature sensor and an outdoor humidity sensor (enthalpy control) monitor conditions for economizer operation.
- Comfort cooling systems are equipped with multiple controls. Operating controls, such as thermostats, allow the user to adjust conditions in the conditioned space. Motor controls, such as motor starters and starting relays, activate and deactivate the compressor. Limit controls shut down the system or activate an alarm if operating conditions, such as pressure or temperature, exceed safe limits.
- Safety concerns when servicing RTUs include the height of the building, conveying tools and equipment to the roof, and the high winds and weather conditions to which a technician is exposed on a roof.
- Variable refrigerant flow (VRF) systems use multiple indoor cooling units connected to one or more outdoor units. This provides the flexibility of having separately zoned conditioned spaces.
- A chiller is a refrigeration system that uses a mechanical or absorption refrigeration system to cool water, which is then circulated through a building to provide comfort cooling.
- Chillers are classified by their operating pressures: high-pressure or low-pressure. High-pressure compression chillers are used primarily for comfort cooling. Low-pressure chillers are capable of producing very low evaporator temperatures.
- Water circulated through a water-cooled condenser can be cooled and reused through the use of a cooling tower. A cooling tower is a structure that rejects heat from the cooling water of an HVACR system using the evaporation of water.
- Cooling tower water is lost by evaporation, breezes, and blowdown. A float switch refills the sump with makeup water. If a cooling tower must operate in freezing conditions, a basin heater should be used to prevent ice formation. Outdoor piping may require electric heat tracing.
- Water valves control water flow through water-cooled condensers and chillers. Types of water valves include electric, pressure, and thermostatic.

Review Questions

Answer the following questions using the information in this chapter.

1. Which of the following is a trait of a packaged outdoor air-conditioning unit?
   A. The condenser coil is located outdoors, and the evaporator coil and furnace are located indoors.
   B. Rooftop installation is the only location option.
   C. The supply and return ducts pass through the exterior wall of the building.
   D. All of the above.
2. A rooftop unit may provide heat for the indoor climate using the following methods, *except* _____.
   A. electric heating elements
   B. gas-fired furnace
   C. heat pump
   D. solar radiation
3. A rooftop unit can provide "free cooling" if it is equipped with a(n) _____.
   A. cooling tower
   B. economizer
   C. heat pump
   D. variable refrigerant flow

Copyright Goodheart-Willcox Co., Inc.

4. High humidity outdoors can prevent a rooftop unit's free cooling operation when the system has _____ control.
   A. blowdown
   B. enthalpy
   C. purge
   D. VRF
5. In a commercial HVAC system, if the thermostat's switch controls a liquid line solenoid valve, which control usually cycles off the compressor?
   A. Enthalpy control.
   B. High-side pressure control.
   C. Low-side pressure control.
   D. Sequencing control.
6. A pneumatic control system uses _____ for device actuation.
   A. electrical signals
   B. hydraulic fluid
   C. pressurized air
   D. variable refrigerant flow
7. A large RTU is most frequently conveyed to a rooftop using _____.
   A. a crane
   B. on-site assembly
   C. manual rope and pulley system
   D. ramp and rollers
8. A _____ installed between the base rail of a rooftop unit and the top edge of the roof curb prevents water from leaking through the opening.
   A. condensate channel
   B. permeable membrane
   C. resilient gasket
   D. sheet metal drip collector and drain
9. Which of the following is a valid safety precaution for servicing a rooftop unit?
   A. Before working on equipment, secure hinged panels in the open position.
   B. Extend the top of the ladder 3' above the edge of the roof.
   C. Use a rope to lift equipment, tools, and refrigerant cylinders to the roof.
   D. All of the above.
10. VRF in split commercial air-conditioning systems can effectively match cooling capacity by _____.
    A. active air filtration
    B. modulating the flow of refrigerant
    C. opening and closing dampers
    D. passive humidification
11. A chiller system uses a loop of _____ to provide cooling to a conditioned space.
    A. ammonia
    B. cool water
    C. fresh outdoor air
    D. low-pressure refrigerant vapor
12. The secondary refrigerant used in a chiller system _____.
    A. circulates through the conditioned space to provide cooling
    B. circulates through the mechanical refrigerant circuit
    C. precools the primary refrigerant before it enters the condenser
    D. subcools the liquid line
13. Reciprocating compressors are capable of capacity control through _____.
    A. air-side economizers
    B. cylinder unloading
    C. purge unit operation
    D. venting
14. The purpose of a purge unit is to _____.
    A. bypass the compressor when the cut-out temperature is reached
    B. increase the speed at which the system can be evacuated
    C. prevent excessive pressure from building on the high side
    D. remove noncondensables from the system
15. If a chiller system could only use one compressor but needed to provide 2000 tons of cooling capacity, which type of compressor is most likely to be used?
    A. Centrifugal.
    B. Reciprocating.
    C. Screw.
    D. Scroll.
16. A compression chiller economizer improves system efficiency by _____.
    A. modulating refrigerant flow to match cooling capacity
    B. providing free cooling from cool outdoor air
    C. removing noncondensables from the system
    D. subcooling high-side refrigerant

Copyright Goodheart-Willcox Co., Inc.

17. The purpose of a cooling tower connected to an HVAC system is to _____.
    A. cool refrigerant before it is circulated through the conditioned space
    B. cool condenser water
    C. condense refrigerant before it enters the evaporator
    D. None of the above.
18. Basin heaters are used to prevent _____.
    A. chiller freeze-over
    B. ice formation in a cooling tower sump
    C. icing over of RTU evaporators
    D. All of the above.
19. All of the following water valves provide variable water flow control, *except* _____.
    A. pressure water valves
    B. solenoid water valves
    C. thermostatic water valves
    D. All of the above.
20. The operation of a pressure water valve is in reaction to _____.
    A. condenser exhaust water
    B. evaporator temperature
    C. high-side pressure
    D. low-side pressure

Copyright Goodheart-Willcox Co., Inc.

CHAPTER 34 Absorption and Evaporative Cooling Systems

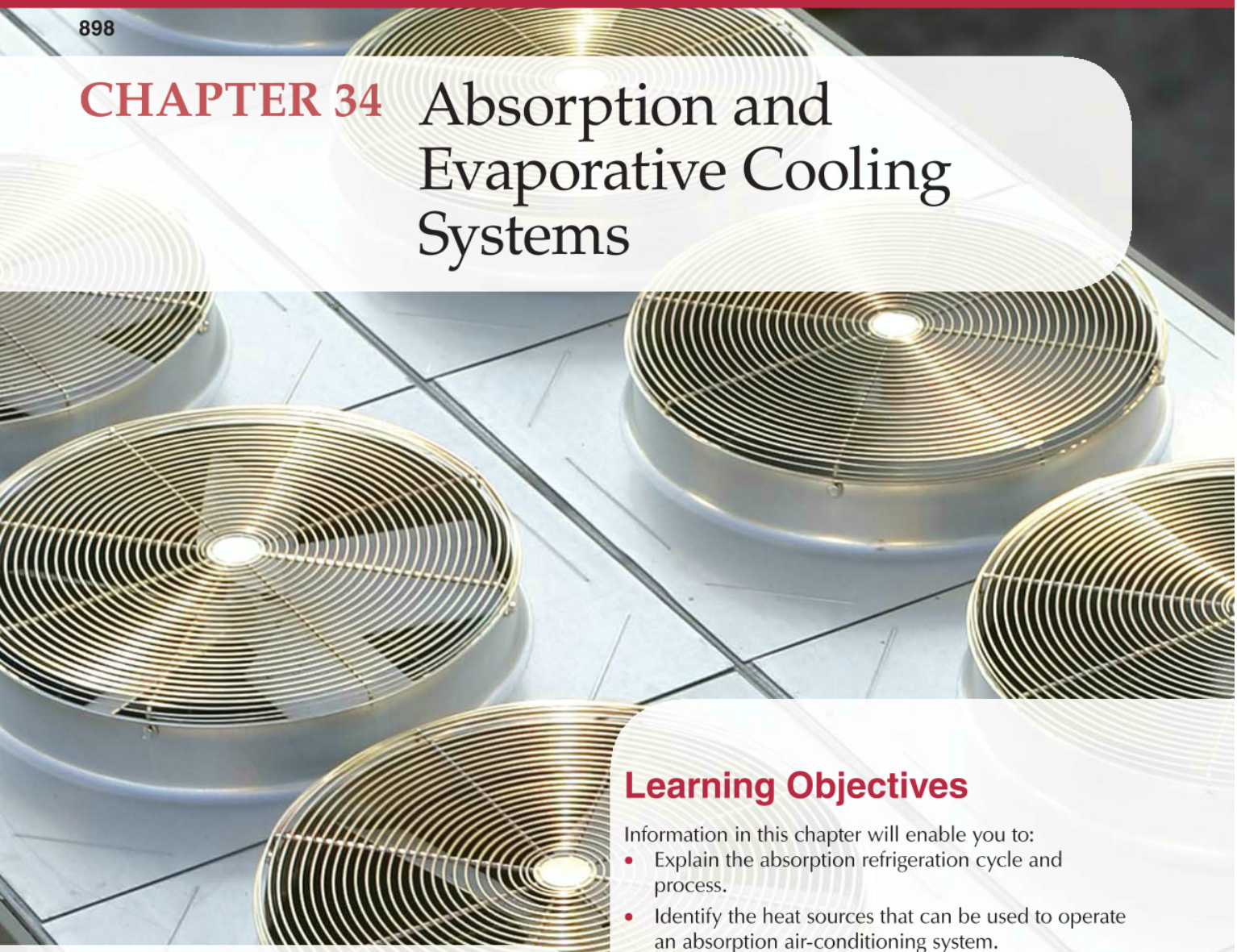

Learning Objectives

Information in this chapter will enable you to:

- Explain the absorption refrigeration cycle and process.
- Identify the heat sources that can be used to operate an absorption air-conditioning system.
- Summarize the operation of residential and commercial absorption chillers.
- Compare direct-fired and indirect fired absorption systems.
- Understand the difference between single-effect and double-effect absorption chillers.
- Explain the differences in operation between ammonia and lithium bromide absorption systems.
- Understand how multiple absorption units can be combined in a multiple unit load system.
- Summarize the energy efficiency advantages of an absorption air-conditioning system.
- Explain the basic concepts behind evaporative cooling.
- Understand how a roof pond works.
- Summarize the function of a roof mist cooling system.
- Summarize the steps involved in absorption cooling system service.

Chapter Outline

34.1 Absorption Refrigeration Systems
34.1.1 Absorbants and Refrigerants
34.1.2 Basic Absorption Refrigeration Cycle
34.1.3 Types of Absorption Systems
34.2 Absorption Cooling Systems
34.2.1 Residential Absorption Chiller Air-Conditioning Systems
34.2.2 Commercial Absorption Systems and Chillers
34.3 Absorption System Service
34.3.1 Servicing Ammonia-Based Absorption Systems
34.3.2 Servicing Lithium Bromide–Based Absorption Systems
34.4 Evaporative Cooling
34.4.1 Indoor Applications
34.4.2 Wet Roof Cooling

Technical Terms

absorbant
absorption
affinity
anhydrous ammonia
cogeneration
combined heat and power (CHP) plant
continuous-cycle absorption system
direct-fired
double-effect absorption system
evaporative cooling
excelsior
indirect-fired
intermittent absorption systems
lithium bromide
lithium bromide absorption chillers
roof mist cooling system
roof pond cooling
single-effect absorption system
strong solution
trigeneration
weak solution
wet roof cooling

Review of Key Concepts

Reviewing these concepts from earlier chapters will help you understand new concepts presented in this chapter:

- The temperature at which a substance changes its state depends on the pressure acting on the substance. The higher the pressure is, the higher the temperature needed to bring about a state change. (Chapter 5)
- Heat transfer is accomplished in refrigeration systems by a refrigerant changing phase between vapor and liquid. As a refrigerant evaporates, it absorbs heat. As it condenses, it releases heat. (Chapter 6)
- The four processes that make up a compression refrigeration system are compressing, condensing, metering, and evaporating. A compression refrigeration system uses mechanical energy to drive the refrigeration process. (Chapter 6)
- Chilled water systems, which are commonly referred to as chillers, are refrigeration systems that cool water, which is then circulated through the building to provide cooling. (Chapter 33)

Introduction

The comfort cooling systems described previously in the book have been based on the familiar compression refrigeration system. In this chapter, you will be introduced to two additional methods of cooling a space. These methods are absorption cooling and evaporative cooling.

34.1 Absorption Refrigeration Systems

Compression refrigeration systems use the mechanical energy of compression to achieve the pressure levels needed for refrigeration. Absorption refrigeration systems use heat energy instead of mechanical energy to achieve refrigeration. Absorption refrigeration systems use heat to change low-temperature, low-pressure vapor into high-pressure vapor.

34.1.1 Absorbants and Refrigerants

In order to accomplish temperature and pressure manipulation, absorption systems use chemicals with specific characteristics. Substances with the right properties can be used as refrigerants and absorbants. A refrigerant is a substance that transfers heat from a conditioned space to an unconditioned space. An ***absorbant*** is a substance that soaks up, or absorbs, a refrigerant and lowers their combined pressure.

Different combinations of substances can be used as an absorbant and refrigerant pair, depending on how the substances interact. If one of the substances tends to absorb the other, it is said to have an ***affinity*** for the other substance. Substances used as absorbants must have an affinity for the substance used as the refrigerant. The absorbant will absorb the refrigerant when cool and release it when heated.

In absorption chillers, the refrigerant is typically water and the absorbant is often a form of sodium. In some systems however, the refrigerant is ammonia and water is the absorbant. As described here, water acts as a refrigerant in one system and as an absorbant in another. The way the substances react to each other determines their use as a refrigerant or absorbant in a given absorption system.

When the absorbant becomes saturated with the refrigerant, it is called a ***strong solution***. When the mixture is not fully saturated, it is referred to as a ***weak solution***. A strong solution contains as much refrigerant as possible. A weak solution contains less refrigerant than a strong solution and is capable of absorbing additional refrigerant.

Pro Tip

Terminology

The terms *strong solution* and *weak solution* can have different meanings in different publications. When these terms are used, it is important to understand whether the term is referring to the ratio of refrigerant to absorbant or referring to the ratio of chemical (lithium bromide or ammonia) to water. In this book, the terms will always refer to the ratio of refrigerant to absorbant.

Figure 34-1 illustrates the difference between a weak and a strong solution. Water has an affinity for ammonia vapor; therefore, water acts as an absorbant.

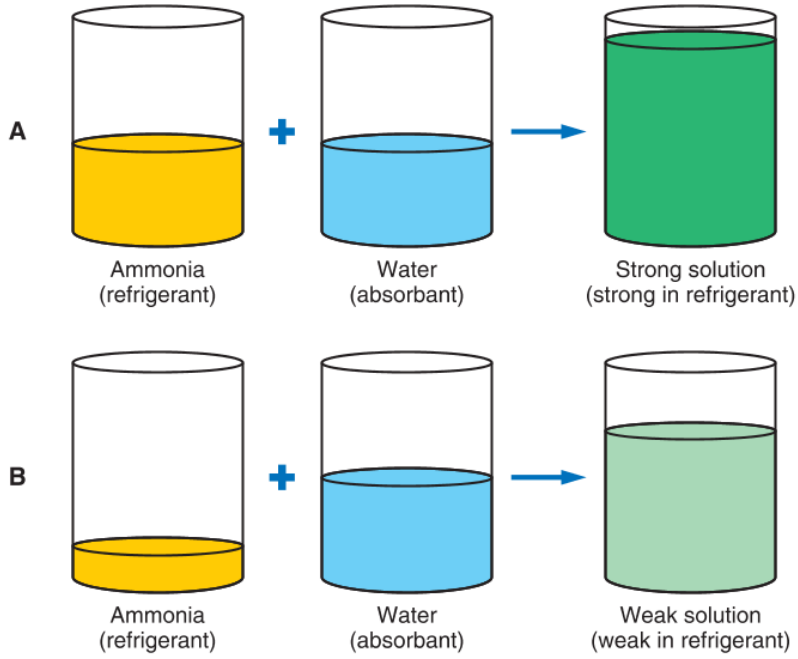

Goodheart-Willcox Publisher

Figure 34-1. Comparison of a weak solution and a strong solution. A—The water absorbs a large amount of ammonia and becomes saturated, creating a strong solution. B—The water absorbs a small amount of ammonia and has a weak concentration of ammonia.

Copyright Goodheart-Willcox Co., Inc.

In **Figure 34-1A**, water mixes with ammonia until it becomes saturated, creating a strong solution. It no longer has the ability to absorb more ammonia. In **Figure 34-1B**, a smaller amount of ammonia is mixed with water and the solution has the ability to absorb additional ammonia. It is a weak solution.

Pro Tip

Adsorption and Absorption

When a solid attracts and holds another substance on its outer surfaces, the process is called *adsorption*. When one substance attracts and combines with another substance to form a uniform solution, the process is called ***absorption***.

34.1.2 Basic Absorption Refrigeration Cycle

Absorption systems have some similarities to compression systems, but also some significant differences. The system can be divided into four sections including generator, condenser, evaporator, and absorber. A basic absorption refrigeration system is shown in **Figure 34-2**.

In an absorption system, the evaporator and condenser perform essentially the same functions they perform in a compression system. However, a compression system uses a compressor to change a low-pressure vapor into a high-pressure vapor. In an absorption system, the function of the compressor is performed by the following components:

- Generator (heater)—heats the refrigerant, raising its pressure.
- Absorber—combines refrigerant vapor from the solution, lowering its pressure.
- Pump—circulates the refrigerant from the absorber to the generator.

An absorption system operates under two pressures. The high-pressure side, consisting of the generator and condenser, operates at a pressure of 200 psig to 300 psig (1400 kPa to 2100 kPa). The low-pressure side, consisting of the absorber and evaporator, operates at

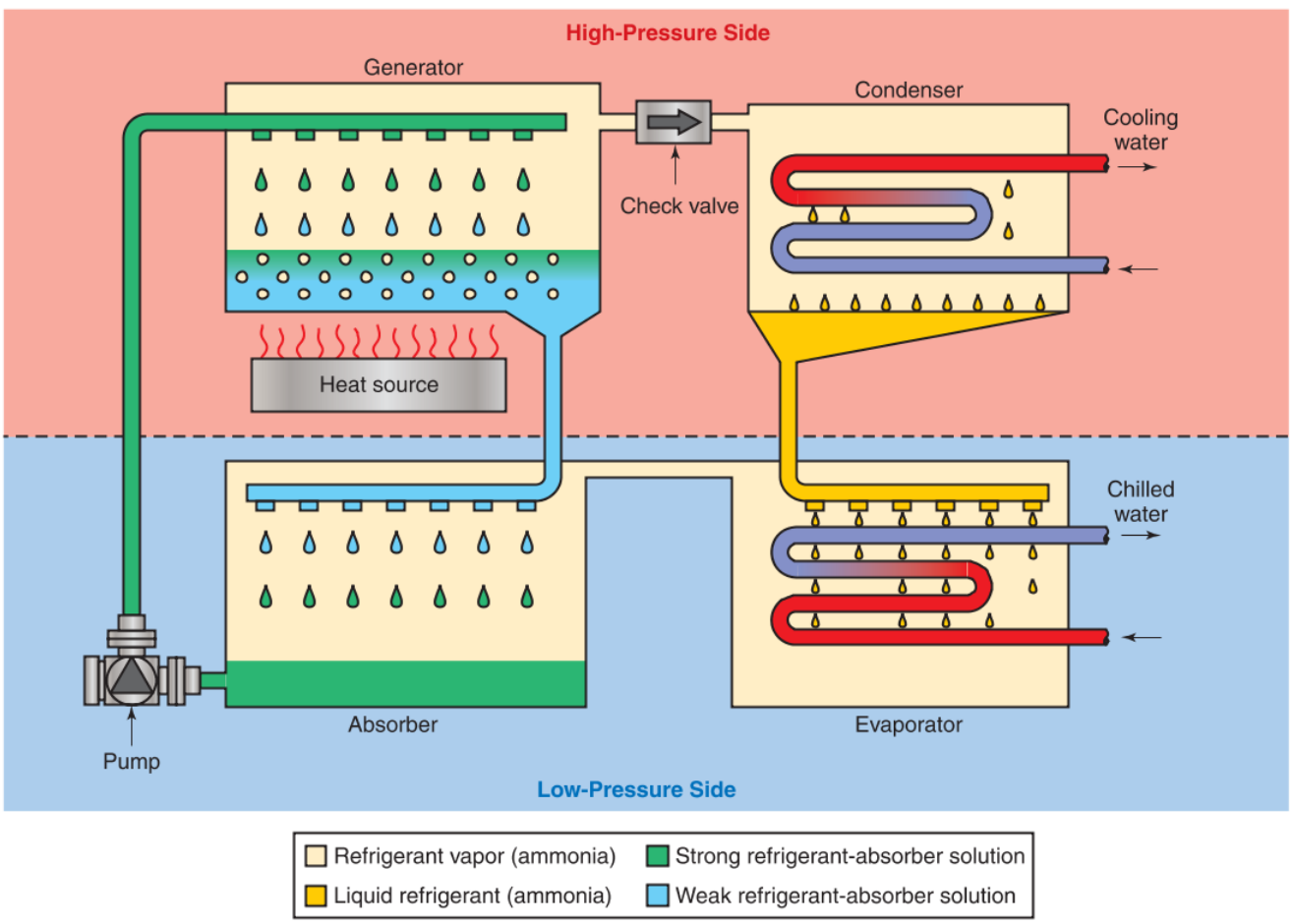

Goodheart-Willcox Publisher

Figure 34-2. Simple absorption refrigeration system.

Copyright Goodheart-Willcox Co., Inc.

40 psig to 60 psig (275 kPa to 410 kPa). The high and low sides are separated by check valves, liquid traps, a pump, or other controlling devices.

The generator is warmed by a heat source. The heat causes refrigerant to boil out of the refrigerant-absorbant solution. The refrigerant vapor rises to the top of the generator and then flows to the condenser. At the same time, some of the solution at the bottom of the generator passes through an orifice and then flows to the absorber. The orifice reduces the pressure on the solution, which lowers its temperature. As a result, the solution flowing into the absorber is once again able to absorb refrigerant.

Meanwhile, in the condenser, heat is removed from the refrigerant vapor by the cooling medium (water or air). This causes the refrigerant vapor to condense into a liquid. The high pressure in the condenser drives the liquid refrigerant into the evaporator through an orifice.

Water tubes pass through the evaporator. The water flowing through these tubes absorbs heat from the conditioned space and carries it to the evaporator. In the evaporator, heat from the water in these tubes is absorbed by the liquid refrigerant. This lowers the temperature of the water in the tubes. The chilled water is recirculated to the conditioned space. Since the water is at a lower temperature than the air in the conditioned space, it is able to absorb additional heat from the space.

The heat that the liquid refrigerant in the evaporator absorbs from the chilled water circuit causes the refrigerant to boil into a vapor. The refrigerant vapor is drawn back to the absorber and is cooled by the flow of weak solution coming from the generator. In the absorber, the heat in the refrigerant vapor is transferred to the surface of the absorber and then to the outside air, causing the refrigerant vapor to condense. The strong solution that is formed at the bottom of the absorber is pumped back to the generator by the solution pump. There, the process is repeated.

34.1.3 Types of Absorption Systems

Chillers are a primary application of absorption refrigeration systems. Absorption chillers use the heat energy of a flame or heating element to complete the refrigeration cycle. These chillers are used for air conditioning or for industrial process cooling. Absorption systems are also used in industrial refrigeration and air conditioning and domestic and recreational vehicle refrigeration.

Absorption systems are generally classified by their operation cycle:

- Intermittent systems.
- Continuous-cycle systems.

Intermittent Absorption System

As their name implies, ***intermittent absorption systems*** are absorption systems that operate intermittently. Often, one charge of fuel will operate the generator for a short period of time that will run the system for about one day. After their cycle of operation ends, they need to be recharged with fuel. The use of intermittent absorption systems is usually limited to places where other adequate, consistent sources of power are unavailable.

Continuous-Cycle Absorption System

A ***continuous-cycle absorption system*** is operated by the application of a limited amount of heat. This heat is furnished by gas, electricity, or kerosene. Continuous-cycle absorption systems are often used in domestic refrigerators in recreation vehicles and in year-round air conditioning of both homes and larger buildings.

34.2 Absorption Cooling Systems

The number of absorption air-conditioning systems used in residential and commercial buildings has increased. The refrigerants most commonly used in these absorption systems are ammonia and water. In most systems, ammonia is the refrigerant and water is the absorbant. Large commercial chiller systems may use water as the refrigerant and lithium bromide as the absorbant.

An absorption system may use any number of heat sources. These include natural gas, LP (liquefied petroleum) gas, kerosene, steam, or electricity (resistance heating). Absorption systems have few moving parts. Small systems have moving parts only in the heat source valves and controls. Some larger systems also have circulating pumps and fans.

34.2.1 Residential Absorption Chiller Air-Conditioning Systems

A typical residential absorption chiller air-conditioning system is shown in **Figure 34-3**. The generator has a gas burner that heats a mixture of ammonia and water. The boiling point of ammonia is lower than that of water. Therefore, the ammonia evaporates and flows through the line marked 1. As the ammonia vapor passes through the rectifier, some of it condenses and is returned to the generator. The remaining ammonia vapor passes to the condenser, marked 2, as a high-temperature, high-pressure gas.

As outside air passes over the condenser, it removes heat from the ammonia. The ammonia condenses to a liquid and passes through the line marked 3, to the

Copyright Goodheart-Willcox Co., Inc.

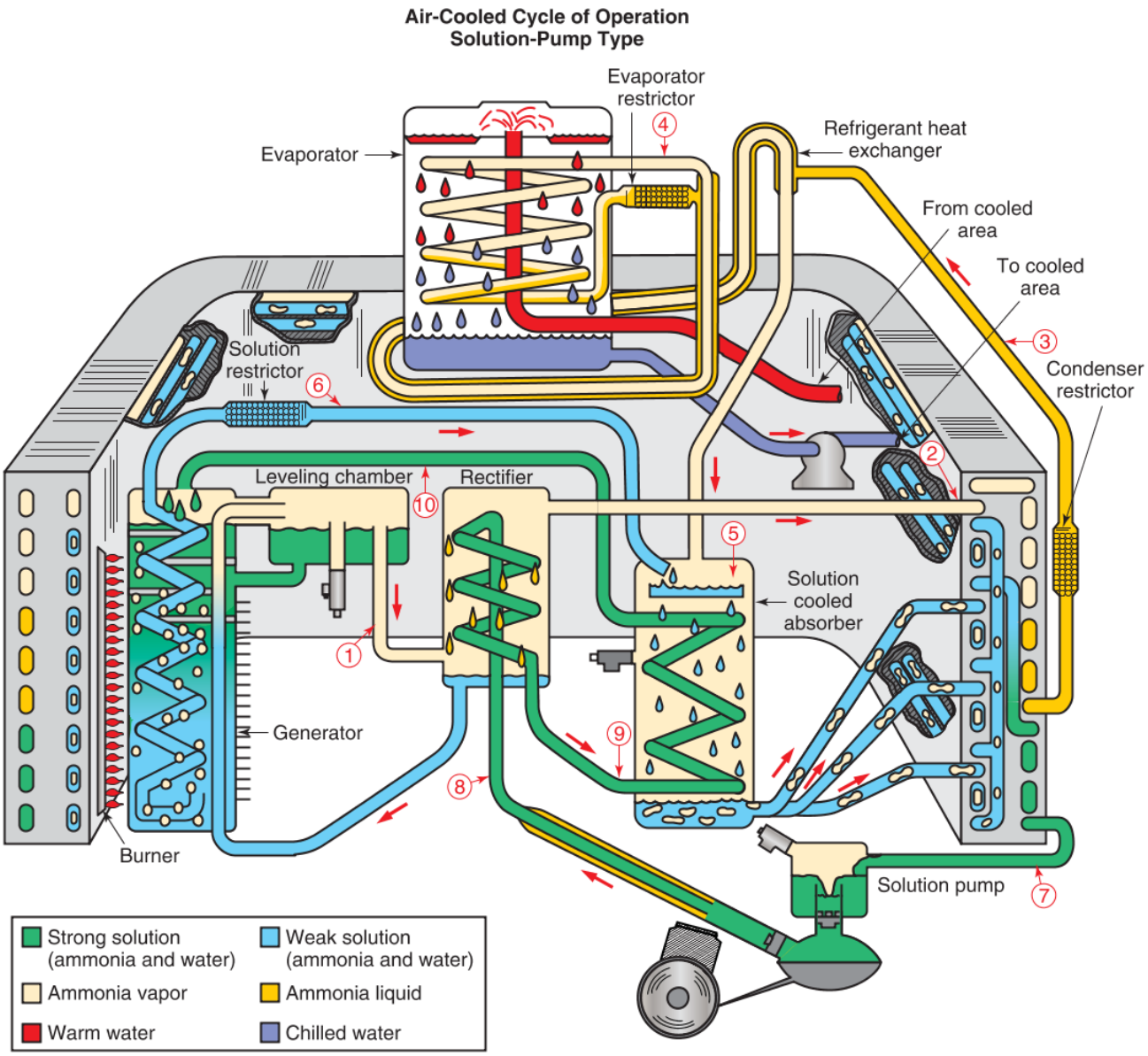

Robur Corporation

Figure 34-3. Refrigeration cycle of a typical residential absorption system. This absorption chiller uses a pump to circulate the solution through the cycle.

refrigerant heat exchanger, also known as a precooler. The heat exchanger reduces the temperature of the liquid ammonia before the ammonia reaches the evaporator. It also heats the cold ammonia vapor leaving the evaporator through line 4.

Pressure drops as liquid ammonia leaving the heat exchanger passes through the evaporator restrictor into the evaporator. Here, it picks up heat from the chilled water circuit and boils to ammonia vapor. Ammonia vapor in line 4 passes through the heat exchanger, where it absorbs heat from the refrigerant coming out of the condenser. After passing through the heat exchanger, the ammonia vapor passes to the solution-cooled absorber, marked 5. In the generator, most of the ammonia boils out, leaving a solution with a weak concentration of ammonia. This solution leaves the generator at a high pressure. It passes through a restrictor in line 6, which meters the flow and separates the high- and low- pressure sides of the system.

The weak solution passes from line 6 into the absorber. Here, the solution temperature is lowered by

Copyright Goodheart-Willcox Co., Inc.

transferring heat to the ammonia vapor in the absorber. The weak solution absorbs the low-pressure ammonia vapor coming from the evaporator, increasing the concentration of ammonia in the solution at the bottom of the absorber.

The solution travels from the absorber, through the condenser, where it loses some of its heat. As the solution cools, its ability to absorb additional ammonia is decreased, so it becomes a strong solution. The strong solution leaves the condenser and is carried to the solution pump through line 7. The pump forces it at a high pressure to the rectifier through line 8. The strong solution absorbs some heat from the ammonia vapor in the rectifier. The strong solution then flows to the absorber through line 9, where it absorbs additional heat. This preheated solution returns through line 10 to the generator. The cycle begins all over again. The same action occurs in larger units except that two burners may be used.

Residential Absorption Air Conditioner Construction

A typical residential gas-fired absorption chiller is shown in **Figure 34-4**. The unit is installed on a concrete pad. On the surface, the installation appears similar to that of a typical compression-type central air-conditioning system. However, the supply and return water lines are flexible hoses that are both covered with hose insulation. The hoses are secured with stainless steel clamps to prevent sound transmission. A water-type cooling coil is installed in the air handler of the forced-air system. If the coil is located in a system that heats during the cold season using a furnace, plastic piping should not be attached directly to the coil. Copper piping extensions should be used to connect the supply and return hoses to the coil. The condensate drain lines must also be insulated.

Code Alert

Absorption System Piping

All piping for gas lines and chilled water circuits must comply with local building codes.

The burner operation of absorption systems is similar to that of a residential gas-fired furnace. The same controls and gas valves are used as in a normal furnace. The burner of the absorption system is generally much smaller than that of a whole house residential furnace. A control transformer applies the power for the control circuit. The circuit includes a gas valve, direct-spark igniter, and time delay switch for both heating and cooling. An electromagnetic ignition system provides a direct-spark ignition to the main burner. It has a ten-second flame detection system.

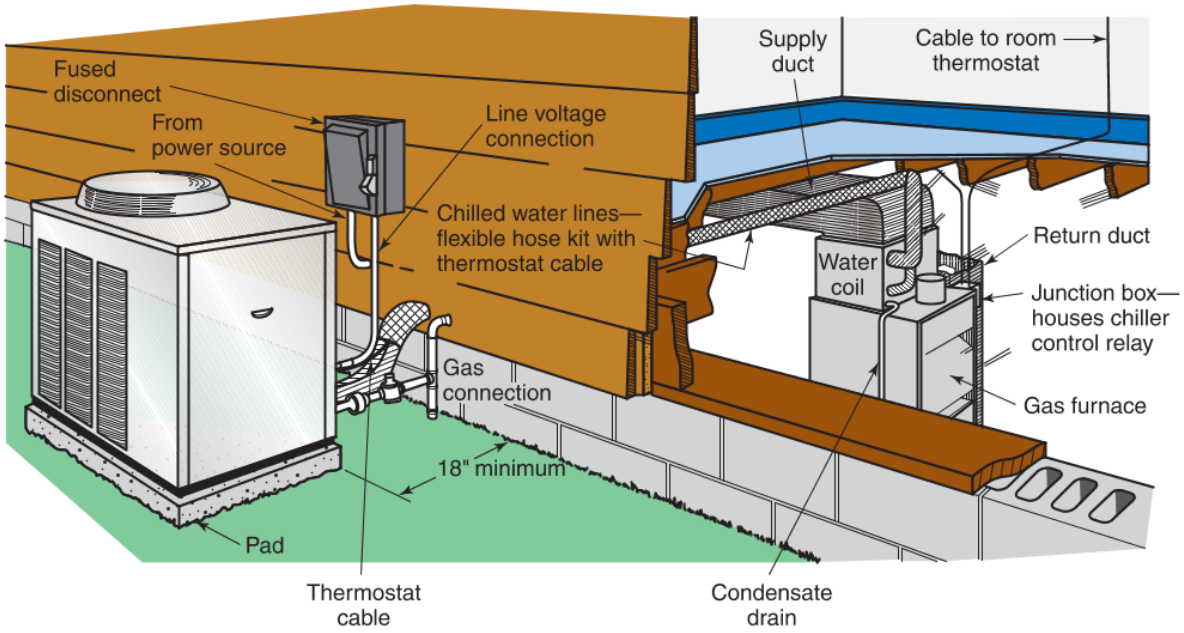

Robur Corporation

Figure 34-4. Residential absorption chiller combined with a typical forced-air furnace. Note the various insulated lines running between the cooling system and the furnace.

Copyright Goodheart-Willcox Co., Inc.

Residential absorption chillers are equipped with a solid-state time delay. The delay prevents the circulation of refrigeration solution and chilled water until the generator is up to operating temperature. The delay also continues the circulation of solution and water after the thermostat has been satisfied, until the generator has had time to cool down.

The basic system also has numerous safety controls. These include flame detectors, chilled water switches, and heating-side operating controls. These are in addition to basic safety controls, such as high-temperature limits and fused disconnects.

The capacity of air-cooled chillers varies with ambient air temperature and the temperature of the chilled water. A decrease in the temperature of the chilled water leaving the system or an increase in the temperature of the air used to cool the condenser results in a decrease in the overall capacity of the system. The capacity of a system is directly proportional to the temperature of the chilled water leaving the system and inversely proportional to the temperature of the air entering the condenser. **Figure 34-5** shows the relationship between chilled water temperature, condenser temperature, and system capacity for typical models of residential absorption chillers.

An absorption system may have several chilled water coils at different locations throughout a building. The absorption unit produces chilled water, which is then distributed to various fan coils. In this application, the low pressure and temperature of the chilled water system allows the use of PVC piping for the chilled water distribution circuit. The gas-fired absorption units used in such an arrangement operate on single-phase power, 115 V or 230 V. Individual units range from 3 tons to 25 tons.

Safety Note

Absorption System Materials

These internal components of an absorption system are made of steel and aluminum. Use of copper or copper alloys is very dangerous, as it may not be able to handle the corrosive nature of the solution and high pressures. Use of copper pipe or components must be strictly limited to the chilled water circuit. Use of copper materials in any part of the system that circulates refrigerant-absorbant solution could result in an explosion.

Absorption Heat Pumps

Absorption systems can be designed to provide hot water for heating in addition to providing chilled water for cooling. Such systems are equipped with a change-over valve which alters the flow of refrigerant through the system. See **Figure 34-6**.

In cooling mode, the system works as previously described. The generator separates the refrigerant vapor from a strong solution. The refrigerant vapor is condensed in the condenser and then metered into the evaporator. In the evaporator, the refrigerant vaporizes and absorbs heat from the chilled water circuit. The refrigerant vapor is reabsorbed by the weak solution in the absorber. The solution is then pumped back to the generator to repeat the cycle.

In the heating mode, the change-over valve is opened, and the flow of cooling water to the condenser and absorber is shut off. As the generator is

10

Capacities in Thousands of Btu/hr												
Leaving Chilled Water Temperature	Air Temperature Entering Condenser											
	3-Ton Unit				4-Ton Unit				5-Ton Unit			
	90°F	95°F	100°F	105°F	90°F	95°F	100°F	105°F	90°F	95°F	100°F	105°F
50°F	36.76	36.28	35.10	33.64	49.01	48.37	47.37	44.85	61.26	60.46	58.50	56.07
48°F	36.72	36.18	34.92	32.65	48.96	48.24	47.13	43.53	61.20	60.30	58.20	54.42
46°F	36.65	36.04	34.50	31.32	48.86	48.04	46.57	41.76	61.08	60.06	57.50	52.20
44°F	36.54	35.82	33.72	29.60	48.72	47.76	45.51	39.45	60.90	59.70	56.20	49.32
42°F	36.36	35.53	32.30	27.43	48.48	47.37	43.60	36.57	60.60	59.22	53.84	45.72
40°F	36.00	35.03	30.60	23.40	48.00	46.70	41.30	31.20	60.00	58.38	51.00	39.00

Robur Corporation

Figure 34-5. Capacities of typical air-cooled chillers in thousands of Btu/hr.

Copyright Goodheart-Willcox Co., Inc.

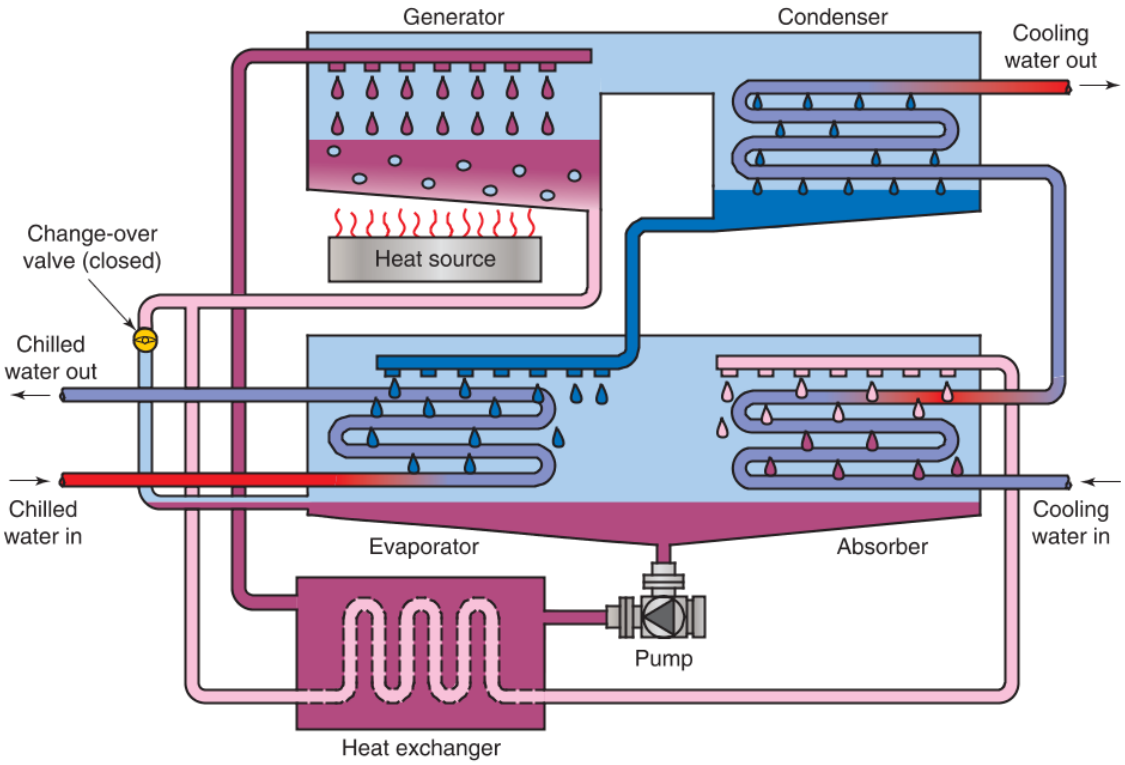

A

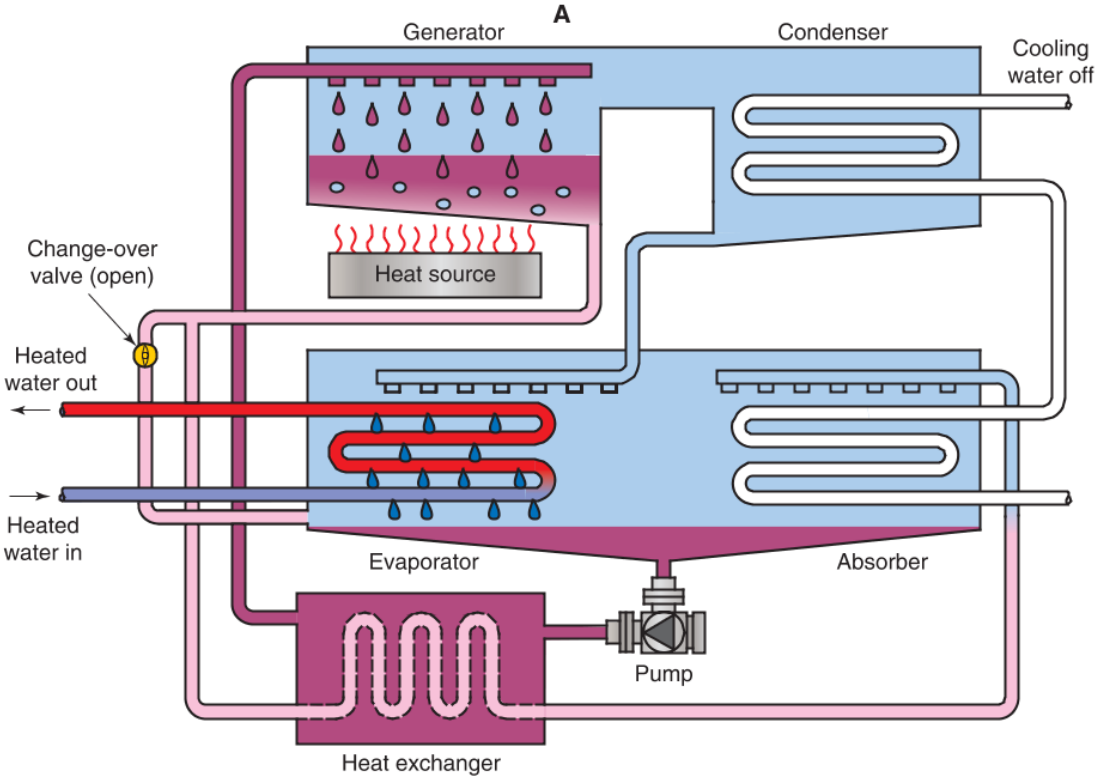

B

Strong solution | Weak solution | Liquid refrigerant (water) | Vapor refrigerant (water)

Goodheart-Willcox Publisher

Figure 34-6. Absorption heat pump. A—Cooling mode. B—Heating mode.

Copyright Goodheart-Willcox Co., Inc.

heated, refrigerant vapor fills the system. At the same time, weak solution from the generator flows into the evaporator through the change-over valve. Relatively cool water is passed through the coil in the evaporator. The water in the coil absorbs heat from the hot, high-pressure refrigerant vapor in the evaporator, causing the refrigerant to condense. The condensed refrigerant mixes with the solution at the bottom of the evaporator. The solution is then pumped back to the generator to repeat the process. Since the flow of cooling medium is shut off in the heating mode, no condensation takes place in the condenser or absorber. All the heat is absorbed in the evaporator by the cool water in the coil.

34.2.2 Commercial Absorption Systems and Chillers

Absorption systems are sometimes used for commercial air conditioning. **Figure 34-7** shows an air-cooled absorption unit designed to cool a small commercial building.

Some commercial absorption systems are ***direct-fired***, meaning that they are directly heated by a burner or other heating element. Other commercial absorption systems are ***indirect-fired***, meaning that the heat that powers the system is produced somewhere outside the absorption system and then delivered to the absorption system, such as piped-in steam, hot water, or hot gas. If an absorption system uses waste heat from another industrial process, it is an indirect-fired system. See **Figure 34-8**.

Absorption systems can be further classified as single-effect or double-effect systems. A ***single-effect absorption system*** is a design in which all of the heat released in the condensation of the refrigerant is transferred to the cooling water and then dissipated to the atmosphere in the cooling tower. This type of system has a relatively low operating efficiency, but requires less heat energy to function.

A ***double-effect absorption system*** uses a secondary, smaller, low-temperature generator to recover some of the waste heat from the primary generator. See **Figure 34-9**. A double effect system requires more heat input to operate, but a higher percentage of the heat input to the system is converted to cooling action. The result is a higher operating efficiency than that achieved by a single-effect absorption system. Double-effect absorption systems may use waste heat from industrial operations or solar heat for the secondary generator heat source.

Ammonia Systems

Ammonia absorption systems for commercial applications are very similar in operation to the absorption

Robur Corporation

Figure 34-7. Gas-fired absorption heat pump for small commercial applications.

systems used in residential applications. The primary function of these systems is to produce chilled water. The chilled water, in turn, may be used for various purposes. It may be used for quenching baths in an industrial process or for chilling drinking water. It may also serve as a special coolant to lower the working temperature of welding tips.

Ammonia is typically used as the absorbant in single-effect absorption chillers, but may also be used in double-effect chillers. A double-effect ammonia absorption chiller system capable of both chilling and heating water is shown in **Figure 34-10**. The cooling cycle for this type of chiller system is shown in **Figure 34-10A**.

The refrigerant that is dispersed in the evaporator extracts the heat from the cooling water. As the heat is absorbed, the refrigerant vaporizes and the water in the chilled water coil is cooled. The chilled water is

Copyright Goodheart-Willcox Co., Inc.

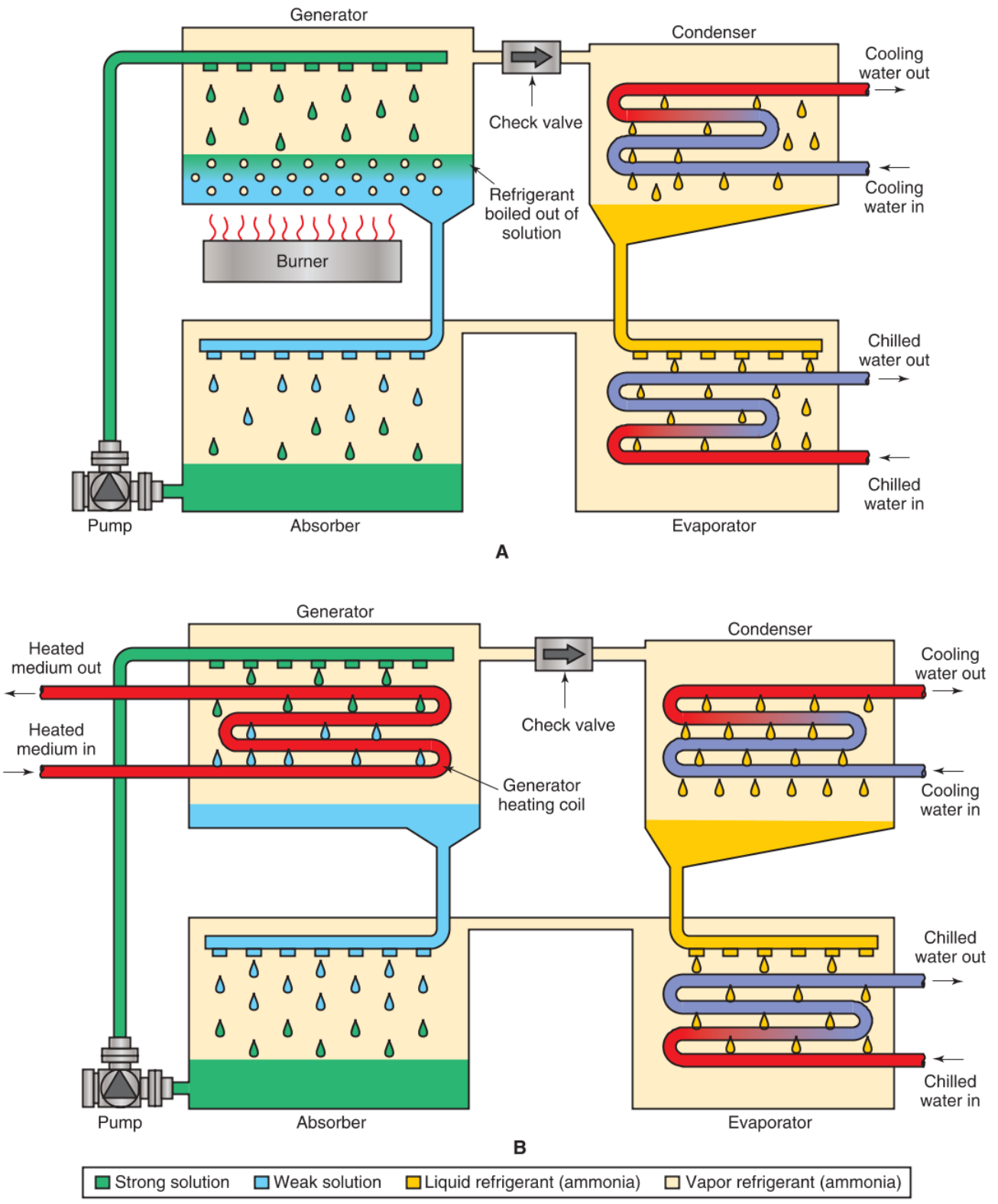

Goodheart-Willcox Publisher

Figure 34-8. Direct-fired and indirect-fired absorption chillers. A—Direct-fired absorption chillers heat the solution inside the generator using electric heating elements, gas burners, or oil burners. B—Indirect-fired absorption boilers pipe steam, hot water, or heated gas through a coil in the generator to separate the refrigerant from the absorbant solution.

Copyright Goodheart-Willcox Co., Inc.

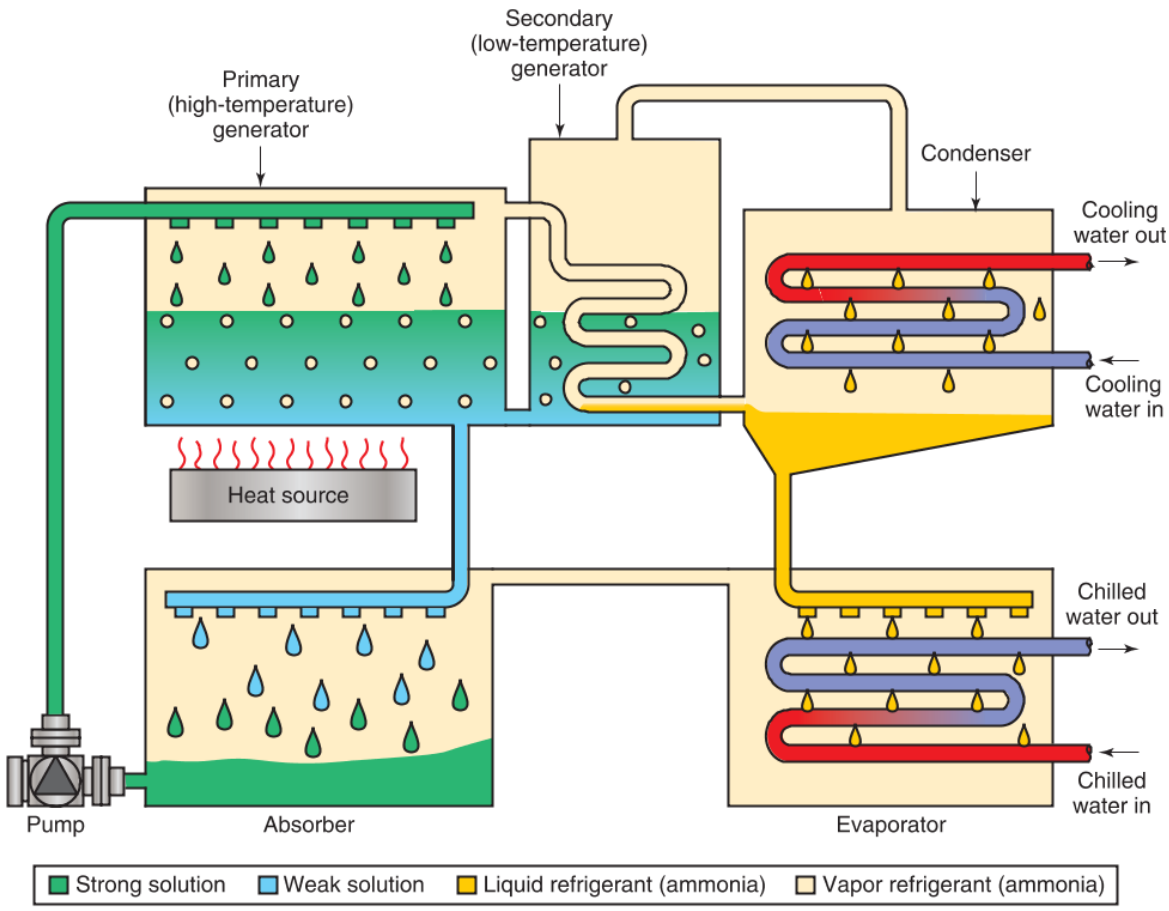

Goodheart-Willcox Publisher

Figure 34-9. A double-effect absorption chiller has a low-temperature generator, which extracts additional heat from the vapor leaving the high-temperature generator. This increases the efficiency of the system, but requires a higher initial heat input.

then recirculated through the conditioned space. The refrigerant vapor is reabsorbed by the solution in the absorber. The solution is returned to the generator to repeat the process.

The heating cycle is shown in **Figure 34-10B**. During the heating cycle, the evaporator functions as a condenser. Hot water in the evaporator tubes absorbs the heat given off during condensation of the refrigerant. The heated water is then recirculated through the conditioned space.

Thinking Green

Use of Waste Heat

Although a direct-fire burner is shown in **Figure 34-10**, the heat for generation could also be supplied by waste heat from another industrial or residential system. Use of waste heat in the absorption system generator greatly increases the building's overall energy efficiency.

Lithium Bromide Systems

Lithium bromide absorption chillers use water as the refrigerant and lithium bromide (LiBr) as the absorbant. Hydraulic diaphragm pulse pumps or electric motor–driven pumps are frequently used to transfer the solution to various parts of the system. These systems are often used in large-scale industrial and commercial applications to provide comfort cooling and cooling for various industrial processes.

As with all absorption systems, heat energy rather than mechanical energy is input into the system to produce the refrigeration effect. A heater or generator is used in place of a compressor. Lithium bromide chillers operate continuously on low power. The absorbant, lithium bromide, is able to absorb large quantities of water vapor.

The basic design of a lithium bromide absorption chiller consists of an upper shell and a lower shell. The upper shell contains the generator and condenser. The

Copyright Goodheart-Willcox Co., Inc.

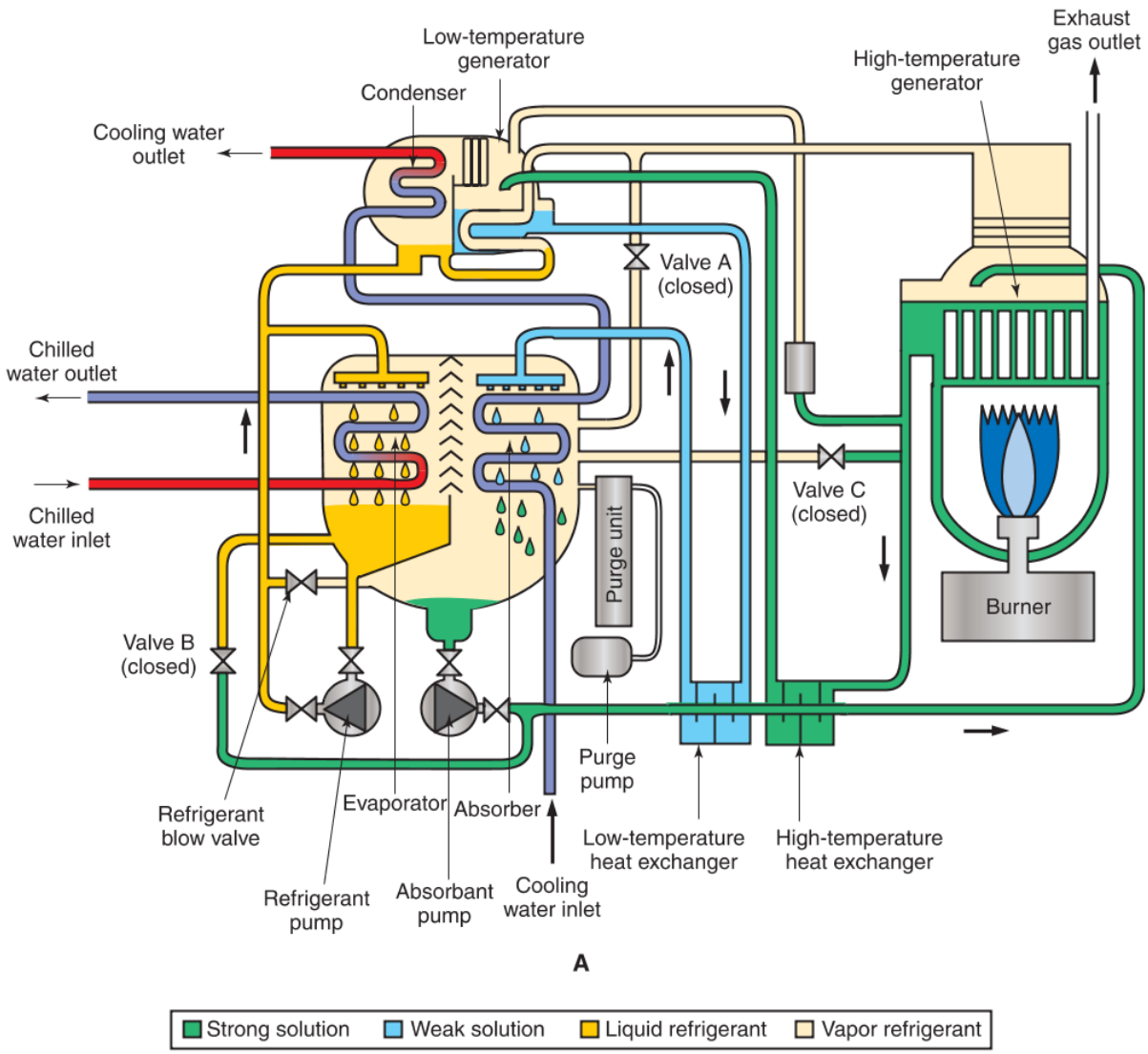

Goodheart-Willcox Publisher

Figure 34-10. Schematic diagrams of an ammonia absorption system. A—Cooling cycle. B—Heating cycle.

lower shell contains the absorber and the evaporator. See **Figure 34-11**.

Steam inside the generator tubing bundle boils the solution. The heat from the steam causes the water (refrigerant) to boil out of the solution, weakening the solution. This weak solution returns to the absorber via the heat exchanger. Water vapor released from the solution in the generator travels to the condenser. There, it condenses on the cooling tubes, and returns to the evaporator.

The absorber and evaporator are housed together and operate at the same temperature and pressure. The absorber contains a solution with a high concentration of lithium bromide (weak solution). The evaporator contains water.

A pump circulates the water in the evaporator through an evaporator spray head. The water is sprayed inside the evaporator over the chilled water coil. The chilled water coil is a closed loop that delivers chilled water to the conditioned space that needs to be cooled. The water in the chilled water coil is flash-cooled by the water vaporizing on the outside of the coil. Water vapor from the evaporator flows to the absorber, where it is absorbed by the concentrated lithium bromide (weak) solution. The absorber has a pump to circulate the lithium bromide solution through a spray head, increasing water vapor absorption. As the water vapor is absorbed, the pressure on the remaining water in the evaporator is reduced. This reduced pressure makes it

Copyright Goodheart-Willcox Co., Inc.

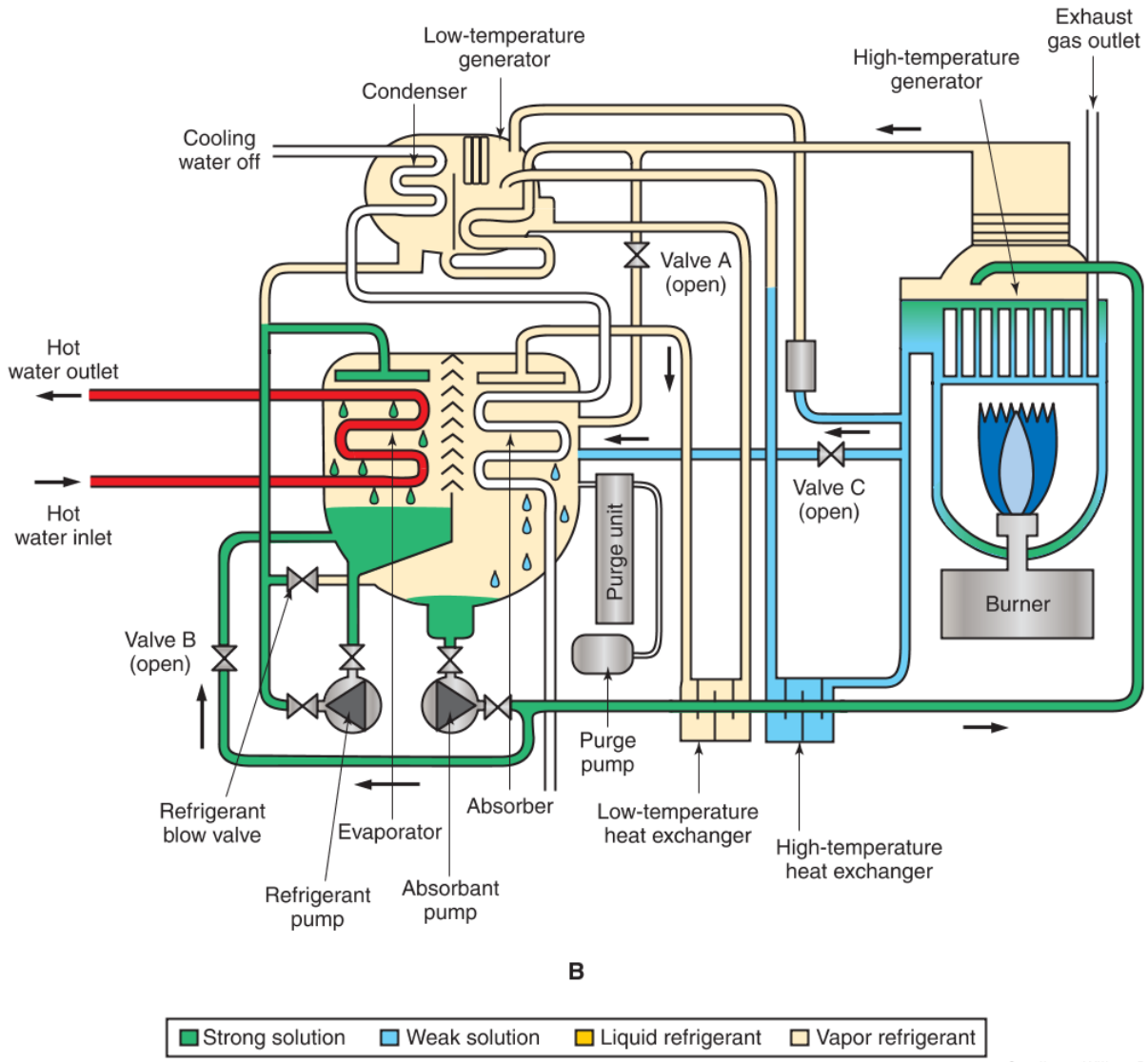

Figure 34-10. (Continued)

easier for the water in the evaporator to boil, generating additional vapor. The generator pump moves the solution from the absorber, pumping it through the heat exchanger and back into the generator.

Figure 34-12 provides a more detailed view of the operation of such a system. Steam or hot water heats the water and lithium bromide solution in the generator. The water turns to water vapor and boils out of the solution. The water vapor is then condensed by a water-cooled condenser. The water flows into the evaporator. There, it evaporates and is absorbed by the concentrated lithium bromide (weak) solution in the absorber.

Three pumps maintain the pressure difference. The absorber pump (1) moves the weak solution. The solution is delivered to the absorber. Strong solution is drawn from the bottom of the absorber toward the absorber pump (1), where it mixes with weak solution returning from the generator. The evaporator pump (2) recycles the water that did not evaporate in the evaporator back to the spray heads. The generator pump (3) moves the strong solution up to the generator.

The temperature changes in the system are marked on the drawing. Cooling water leaves the evaporator at 44°F (7°C). It travels through the cooling coils located in the rooms to be air conditioned (comfort-cooled). The water then returns to the evaporator at 54°F (12°C). If the correct operating conditions

Copyright Goodheart-Willcox Co., Inc.

are maintained, the lithium bromide solution always stays in liquid form. The condenser cooling water also cools the absorber, increasing the solution's ability to absorb water.

The type of lithium bromide absorption system in **Figure 34-11** and **Figure 34-12** uses pumps to circulate the liquids through the system. Some lithium bromide absorption systems rely on gravity to circulate the liquids through the system, **Figure 34-13**.

Steam heat applied to the generator percolates water vapor and weak solution up to the separator. The weak solution then flows by gravity through the heat exchanger. It flows to the absorber where it absorbs water vapor that is exiting the evaporator. The strong solution settles to the bottom of the absorber. It returns to the generator after passing through the heat exchanger. The pressure difference is maintained by the pressure head of the solution.

In the upper half of the system, the water vapor in the separator rises to the condenser. There, it is condensed and becomes liquid water. The water flows by gravity through an orifice into the evaporator. The water evaporates at a low temperature due to a near-perfect vacuum in the system. The water vapor is absorbed by the lithium bromide solution as it enters the absorber.

Note that the absorber and condenser are both cooled by water coils. The condenser water is cooled in a cooling tower and recirculated. Cooling towers were discussed in Chapter 33, *Commercial Air-Conditioning Systems*. The condensing pressure in a system like this is about 50 mm to 60 mm Hg (about 1 psia or 6.9 kPa). The evaporating pressure is 8 mm Hg to 10 mm Hg (about 0.17 psia or 1.2 kPa). Lithium chromate is often used as a corrosion inhibitor.

Chiller Control Centers

Many modern chillers are equipped with a control center. The control center displays performance information, such as inlet and outlet temperatures of

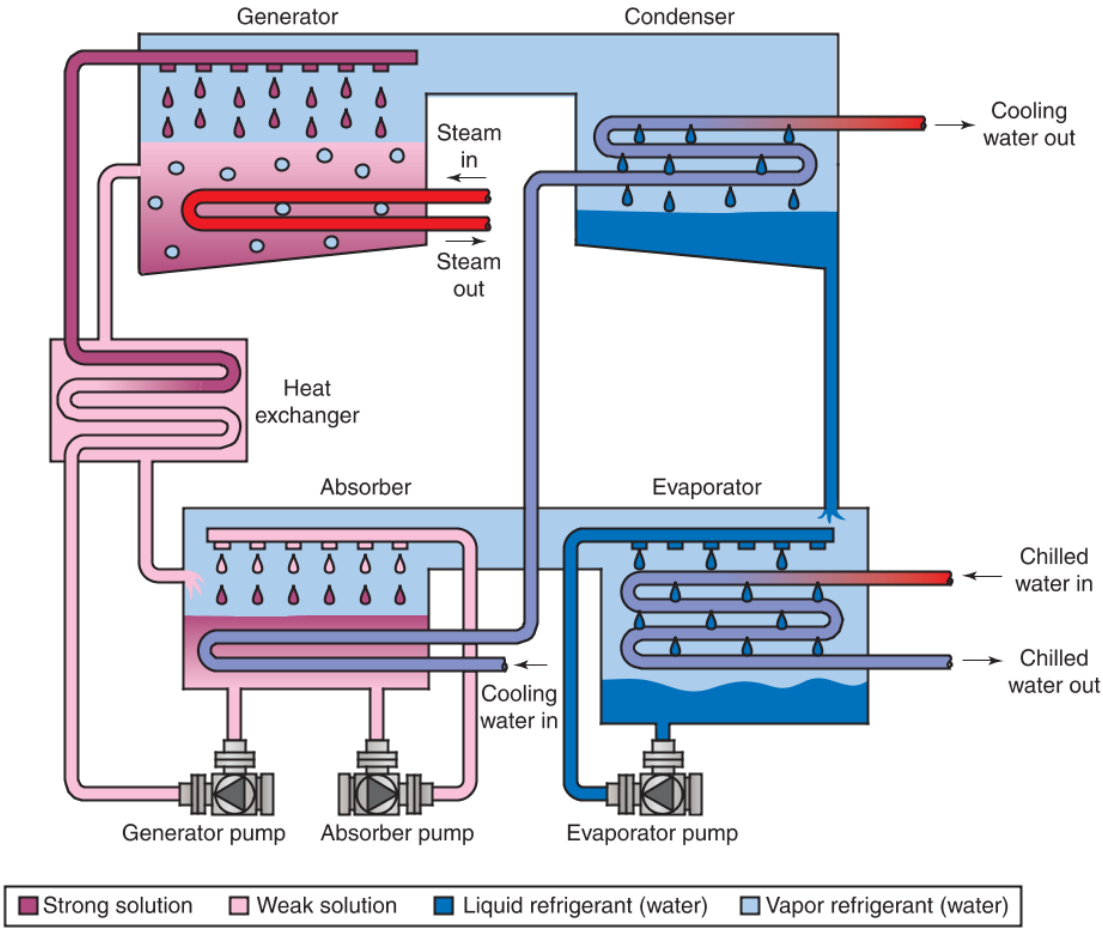

Goodheart-Willcox Publisher

Figure 34-11. Process schematic of a lithium bromide absorption chiller.

Copyright Goodheart-Willcox Co., Inc.

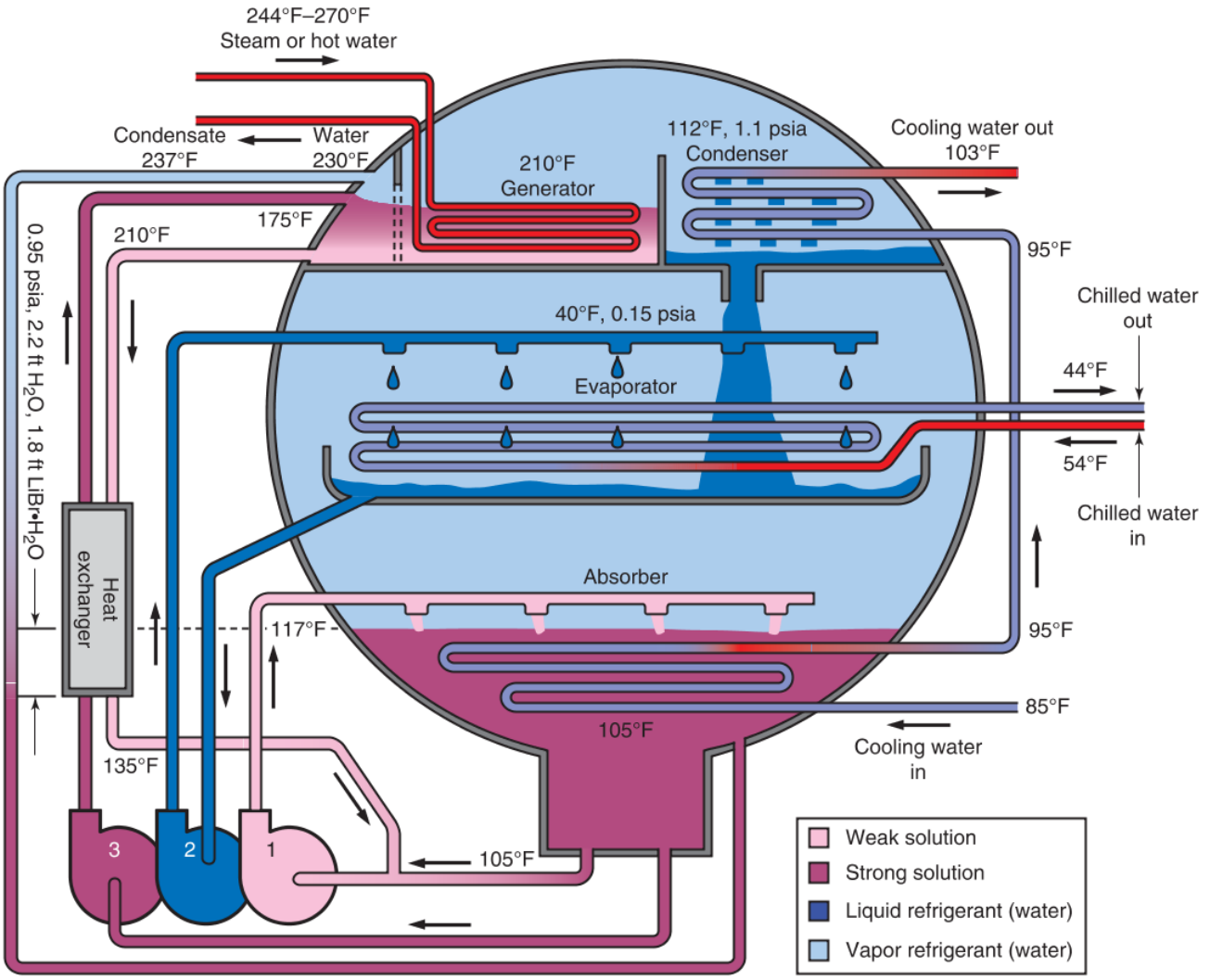

The Trane Co.

Figure 34-12. Absorption-type air conditioning system. It uses water as the refrigerant and lithium bromide solution as the absorbant.

10

the chiller, condenser, and hot water circuits. It also indicates generator pressure and temperature, refrigerant and solution temperatures, and heat input. The panel may display additional information, such as the unit's total operating hours, number of starts, and number of purge cycles completed.

Efficiency Advantages of Absorption Chillers

The application of absorption refrigeration systems in comfort cooling and heating is increasing. Energy efficiency is critical in most commercial applications, and an absorption system offers increased energy efficiency in many situations.

When the waste or by-product energy from one process is used as the primary source of energy for another process, the overall energy efficiency of a building is increased. The use of energy by-products from one process as the primary energy source for another process is referred to as ***cogeneration***. For example, a building using steam to run a generator turbine could use the waste heat from that process to operate an absorption chiller. See **Figure 34-14**.

Pro Tip

Trigeneration

A power plant that produces electricity and useful steam is referred to as a cogeneration plant, or ***combined heat and power (CHP) plant***. If some of that steam is used for heating and some is used to power an absorption chiller, the process is referred to as a ***trigeneration*** or *polygeneration*.

Copyright Goodheart-Willcox Co., Inc.

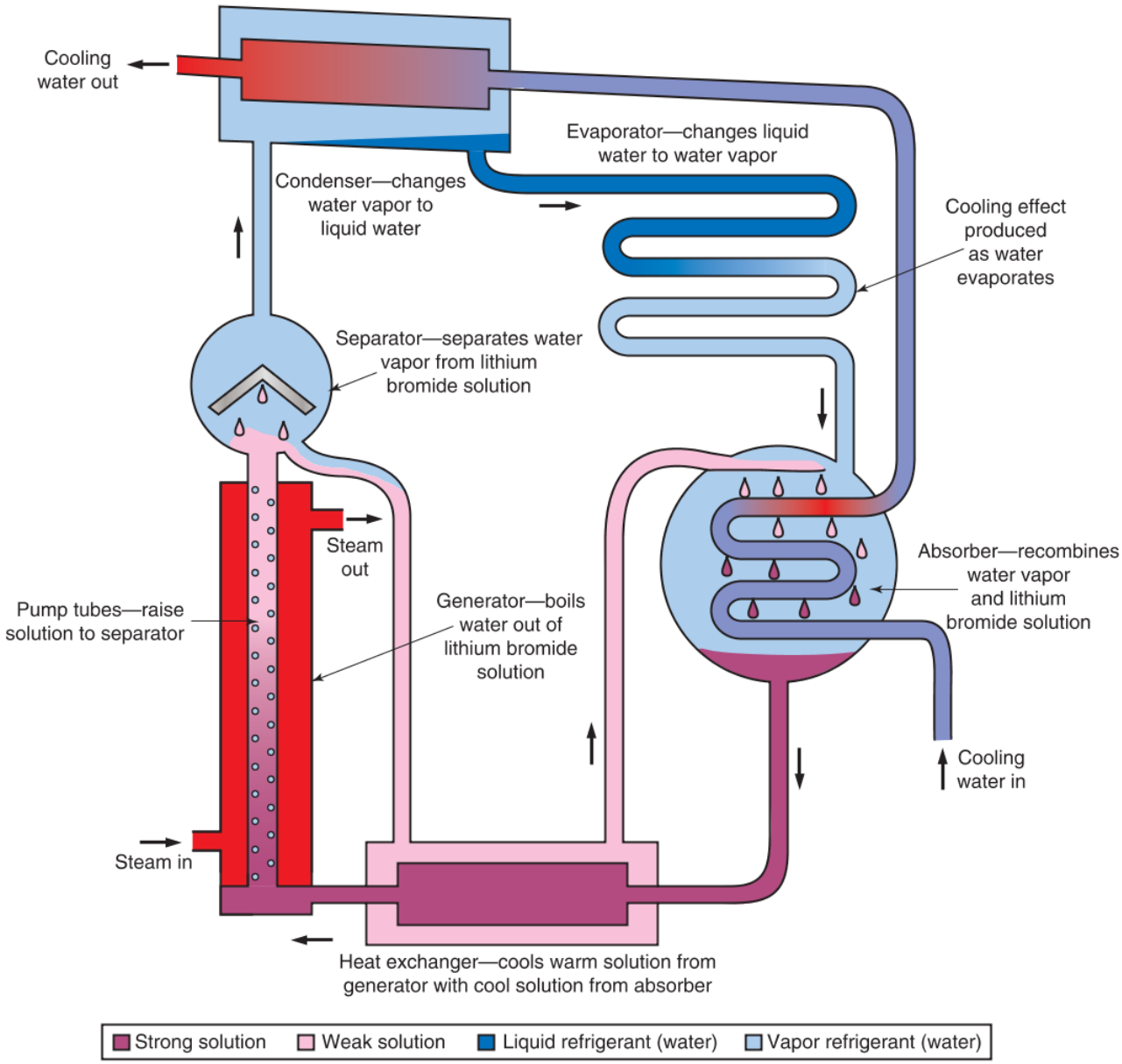

Goodheart-Willcox Publisher

Figure 34-13. Absorption cycle that uses water as refrigerant and lithium bromide as the absorbant. This system relies on gravity to circulate the fluids through the system.

Absorption units provide very high efficiency when they are used in conjunction with solar energy systems. With the right equipment setup, the heat generated by solar energy can be used to heat water, which can then either be used to heat the building or to operate an absorption cooling system that will cool the building.

An advantage of using a gas-fired absorption chiller is seasonal energy costs. Gas usage is traditionally lower during the summer months. Therefore, gas prices are usually lower during these months. Absorption chillers take advantage of this price reduction and provide chilled cooling water at an economical cost during peak cooling load seasons.

34.3 Absorption System Service

Most residential absorption systems are serviceable. They are typically equipped with service valves.

Copyright Goodheart-Willcox Co., Inc.

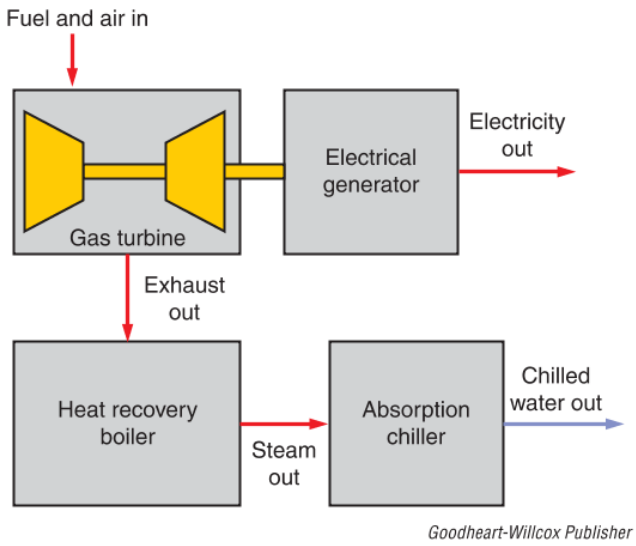

Figure 34-14. Cogeneration example. A gas turbine powers a generator to produce electricity. Exhaust from the gas turbine heats a boiler. Steam from the boiler is used to power an absorption chiller.

However, the technician should be trained by the manufacturer before attempting to service these systems.

Safety Note

Working with Ammonia-Based Absorption Systems

Ammonia is toxic and flammable when mixed at certain ratios with air. Wear a face shield or safety goggles when working with ammonia. Because ammonia reacts with some metals, you should use only steel or aluminum tubing, gauges, fittings, and manifolds when servicing ammonia systems.

34.3.1 Servicing Ammonia-Based Absorption Systems

An ammonia-based absorption chiller is charged with a solution of ammonia, distilled water (pH 6.0 +), and a corrosion inhibitor. A solution cylinder is used to charge the system with the solution. This cylinder usually has about a 45-lb (20-kg) capacity. The solution charge is about 35 lbs (16 kg) of distilled water. It also contains corrosion inhibitor and 10 lbs (4.5 kg) of ***anhydrous ammonia*** (ammonia that is free of water).

The solution cylinder is filled with distilled water and corrosion inhibitor (yellow in color). It is put in through the fill plug. If a white precipitate forms in the solution, the solution should be discarded and a new batch made.

The solution cylinder is then charged with anhydrous ammonia. Anhydrous ammonia is available in 25-lb (11-kg) cylinders. The cylinder has both a vapor and a liquid valve. **Figure 31-15** shows the charging arrangement.

Note that the charging line is connected to the liquid valve of the anhydrous ammonia cylinder. The pail is partly filled with water. It is connected to the vapor valve of the solution cylinder. Vapor is purged from the solution cylinder if necessary to lower the pressure. (This will enable anhydrous ammonia to flow into the solution cylinder.) The water in the pail will absorb the small amount of ammonia purged.

The system must have the correct pressures and the correct amount of anhydrous ammonia. It must also have the correct amount of distilled water and corrosion inhibitor. To check pressures, install a 100% steel gauge manifold, steel lines, and steel fittings. Do not use any equipment containing copper or brass. The steel gauge manifold must have standard steel fittings and steel valves. The manifold will operate exactly like the gauge manifolds described in earlier chapters, **Figure 34-16**.

Leaks in ammonia absorption systems can often be detected by smell. If a leak is too small to produce a noticeable odor, a wet litmus paper test strip can be moved around the suspected leak site. The litmus paper will turn red if it is exposed to ammonia.

Caution

No Bubble Leaks with Ammonia

Bubble leak tests cannot be used for ammonia absorption systems. The leaking ammonia would be absorbed by the soapy water without producing bubbles.

10

34.3.2 Servicing Lithium Bromide–Based Absorption Systems

Lithium bromide is a nontoxic, nonflammable, nonexplosive, and chemically stable salt used in some absorption systems. In a lithium bromide absorption system, water is the refrigerant. Lithium bromide is mixed with the water as an absorbing solution. The resulting mixture is a liquid. It can be handled in open containers but becomes corrosive when exposed to air. Octyl alcohol is sometimes added to reduce the surface tension of the lithium bromide solution. It acts as a wetting agent.

A solution containing 65% lithium bromide by weight will start to crystallize at 110°F (43°C). The solution must not be allowed to reach lithium bromide concentrations high enough or temperatures low enough to allow crystallization.

Copyright Goodheart-Willcox Co., Inc.

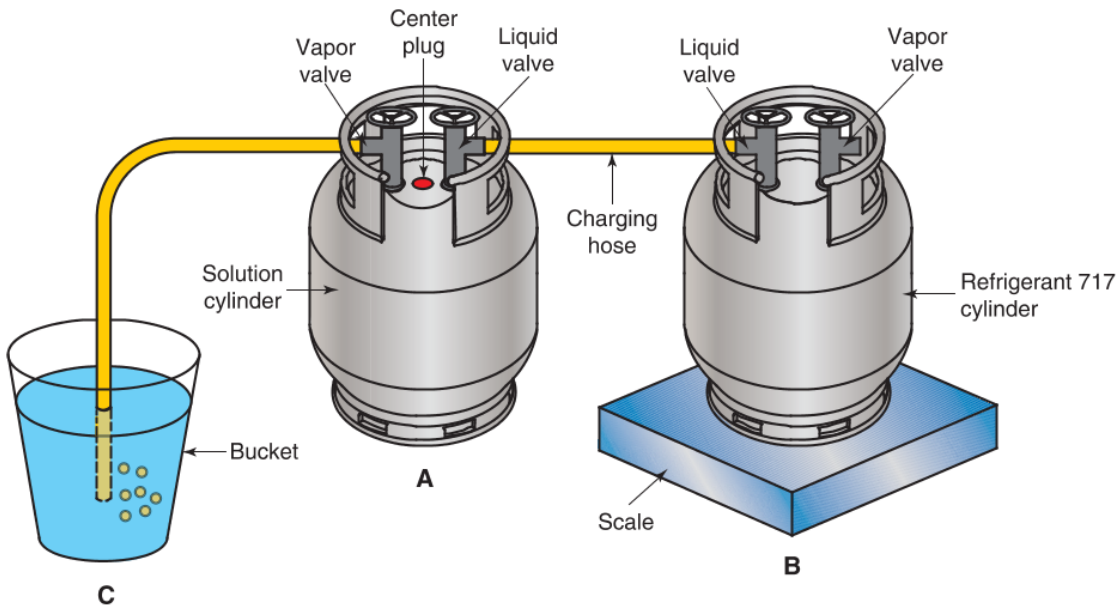

Goodheart-Willcox Publisher

Figure 31-15. Cylinders set up for recharging an absorption system. A—The solution cylinder has a liquid valve, vapor valve, and center plug. It is being charged with liquid ammonia from the cylinder at the right (1 lb ammonia for each 2 lbs distilled water). B—Ammonia cylinder on a scale. C—The pail holds water and a purge line connected to the gas valve of the solution cylinder. Purging decreases pressure in A to allow flow from B.

A B

Ritchie Engineering Co., Inc. – YELLOW JACKET Products Division

Figure 34-16. Ammonia systems typically use gauges, hoses, and fittings made from steel. A—Gauge manifold for ammonia system. Notice the chemical formula for ammonia: NH_3. B—Refrigerant service hose with steel fittings for use with ammonia.

Copyright Goodheart-Willcox Co., Inc.

A typical charge is made up of the following ingredients:

- Lithium bromide solution 120 gal (454 liters).
- Corrosion inhibitor 1 pt (473 ml).
- Refrigerant (water) 35 gal (132 liters).
- Octyl alcohol (2-ethylhexanol) 1 gal (3.7 liters).

The solution becomes thicker if the amount of lithium bromide in the solution increases. A greater concentration of lithium bromide will cause a greater temperature difference between the evaporator and the chilled water. If solution concentration gets too high, the refrigerant will turn solid and must be dissolved. If the absorber becomes too cold (below 85°F or 29°C), solidification can also occur.

Safety Note

Working with Lithium Bromide

Lithium bromide solution may irritate skin, eyes, and mucous membranes. Always use protective gloves, face mask, and eye protection when working with lithium bromide.

Maintenance of a lithium bromide absorption system should include the following tests:

- Specific gravity.
- Alkalinity and pH.
- Copper content.
- Suspended solids.
- Corrosion inhibitor concentration.

To check the system for leaks, it is charged with nitrogen or helium in accordance with the manufacturer's instructions. Soapy water is applied to potential leak points, such as welded joints, sight glasses, and diaphragm valves. If bubbles form, a leak is indicated. After the leak test, the nitrogen or helium is removed, any necessary repairs are made, and the system is purged. Proper purging is necessary to remove any noncondensibles from the refrigerant-absorber solution.

Pro Tip

Maintenance of Lithium Bromide Absorption Chillers

Once air enters a lithium bromide system, the lithium bromide solution becomes highly corrosive. The damage caused by corrosive solution can make it very difficult to recondition a failing system. Every effort should be made to prevent air from entering the system and to keep the lithium bromide solution properly balanced and free of contaminants. The manufacturer's maintenance recommendations must be closely followed.

34.4 Evaporative Cooling

As you have already learned, if warm, dry air is moved rapidly over water at the same temperature, some of the water will evaporate. When those water molecules evaporate, they absorb heat energy from the surrounding molecules, causing the temperature of the remaining liquid water to drop. When this natural cooling process is used to cool a space or objects, it is referred to as ***evaporative cooling***. In dry climates, evaporative cooling is both effective and practical.

For example, if air that is 105°F (41°C) with 20% relative humidity is blown over a reservoir of water, some of the water will evaporate. The remaining water can cool to as low as 55°F (13°C). Normally, the water will cool down to a range of about 65°F (18°C) to 70°F (21°C). As air is forced around the water container, the air is cooled to approximately 75°F (24°C) or 80°F (27°C) with about 40% relative humidity. The cooled air can then be distributed into the space to be cooled. The conditioned room would be quite comfortable. **Figure 34-17** illustrates such a system.

34.4.1 Indoor Applications

Evaporative cooling is often used in climates with bright sunshine and low relative humidity. For example, evaporative cooling can maintain a safe temperature for plants growing in greenhouses. The typical evaporative cooling system used in greenhouses is shown in **Figure 34-18**.

At one end of the greenhouse is an opening covered by a tight lattice of fibers such as ***excelsior*** (fine curled wood shavings). At the top of the lattice are water pipes with small holes. Water leaks out of the small holes and flows downward, wetting the fibers. A fan at the other end of the greenhouse draws in outside air through the lattice. The air entering the greenhouse is cooled by the evaporation of the water on the lattice surfaces. Plants do best under conditions of high relative humidity. Therefore, this type of cooling is ideal. It provides a high relative humidity as well as a lower temperature inside the greenhouse.

Foundries sometimes use this system in situations where a few degrees of cooling are desirable. In such installations, the evaporation takes place in a structure on the roof of the building. The cooled air is brought down into the work area.

34.4.2 Wet Roof Cooling

Wet roof cooling is a method of cooling indoor temperature by the evaporation of water on a

Copyright Goodheart-Willcox Co., Inc.

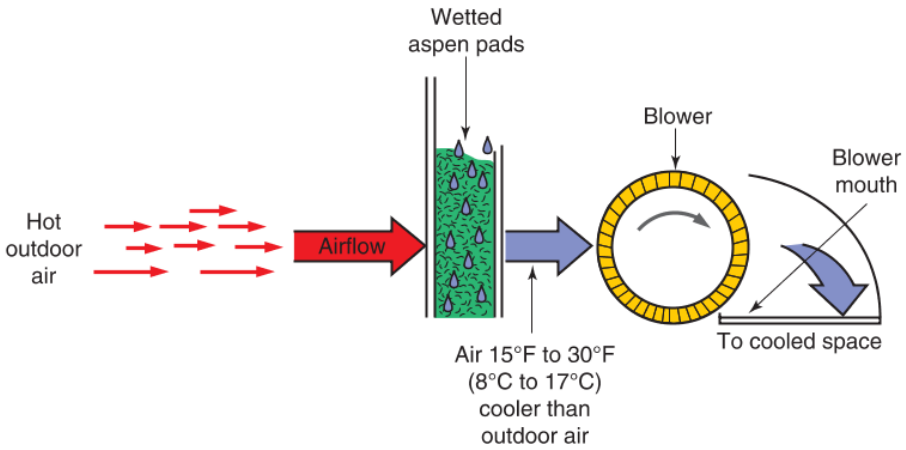

Goodheart-Willcox Publisher

Figure 34-17. Evaporative cooling process. Outside air filters through a water-saturated evaporative medium, is cooled by evaporation, and is circulated by a blower.

building's roof. Like other applications of evaporative cooling, it is used primarily in climates where ambient air temperatures are high and relative humidity is low. There are numerous methods of wet roof cooling. Some systems are designed so that the roof is a trough or pond.

With a ***roof pond cooling***, the entire surface of the roof remains wet and the water is replaced as it evaporates. Roof ponds are typically 2″–3″ (50 mm–75 mm) deep. Where there is bright sunshine much of the day, the building heat load may be high. If the relative humidity is low, a roof pond can maintain a comfortable indoor temperature.

Roof misting systems are another type of wet roof cooling system. A ***roof mist cooling system*** periodically mists small amounts of water onto the roof of a building. The water droplets evaporate when they hit the hot roof. In doing so, the water absorbs a relatively large amount of heat from the roof's surface. Roof mist cooling is designed to prevent heat from entering a structure. It is a simple method of cooling. The cost of a roof misting system may be less than the cost of other types of mechanical air-conditioning equipment.

Roof mist cooling systems operate only during the summer and primarily during daylight hours. However, the systems may be operated into the night for additional cooling. One type of system cools the water at night and stores it in an insulated container. The water cooled at night is then used for evaporative cooling during the day. A roof mist cooling system can reduce the

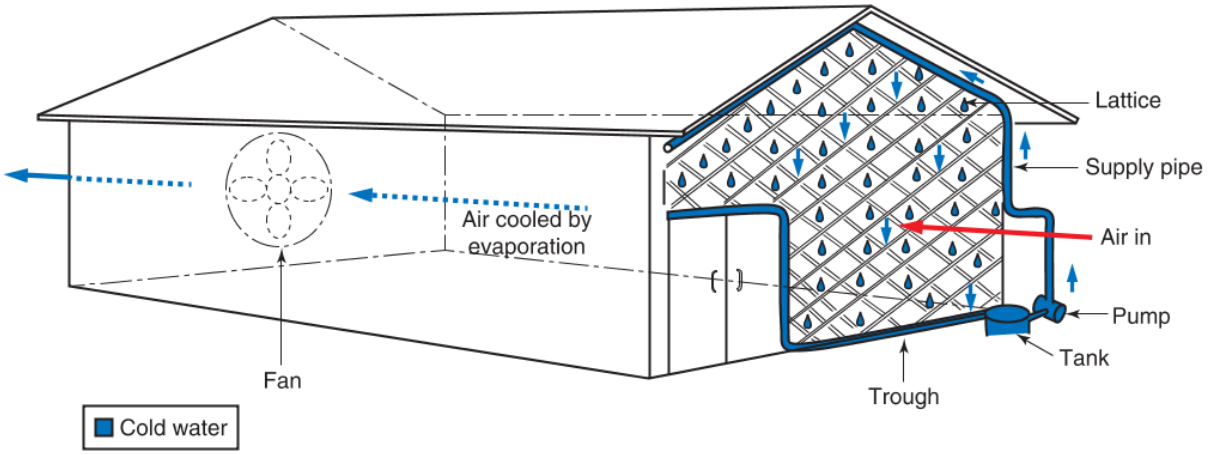

Goodheart-Willcox Publisher

Figure 34-18. A typical evaporative cooling system used in a greenhouse.

Copyright Goodheart-Willcox Co., Inc.

flow of solar heat from the roof into the building's interior by more than 90% during daylight hours.

A roof mist cooling system includes a network of water pipes on the roof. The network is a supply line that branches into "fields." Depending on water pressure available, fields are generally 5000 ft^2 (465 m^2) or larger. Spray heads are distributed throughout the network of piping and are turned on and off by solenoid valves, **Figure 34-19**.

An electronic control designed specifically for roof misting turns the solenoid valves on and off as needed. The solenoid valves open and close the water supply to the sprinkler heads. The electronic control receives data from temperature sensors on the roof and uses that data to calculate the amount of water that can be evaporated at any given time. Only that amount of water is sprayed onto the roof. This prevents water runoff, waste of water, and water stagnation.

Evaporation continues as long as the roof's surface temperature is greater than the wet-bulb temperature of the ambient air. Roof temperatures of 150°F–165°F (65°C–74°C) can be reduced by 60°F–75°F (33°C–42°C), thus reducing the heat gain into the building through the roof.

As the water mist evaporates, the roof is cooled. This reduces the amount of solar radiation (heat) transferred through the roof to the interior of the building. It should be noted that solar radiation transferred through the roof is generally the largest contributor of unwanted heat inside a building. A roof misting system virtually eliminates the roof as a contributor to the internal heat load. See **Figure 34-20**.

The higher the temperature of air, the more water vapor it can hold. Evaporation will continue even when the surrounding air's relative humidity is 100%, as long as the temperature of the roof is higher than the wet-bulb temperature of the air/vapor combination adjacent to the surface. The roof cooling system should maintain a roof surface temperature close to the wet-bulb temperature of the air surrounding it, thereby minimizing the transfer of heat from the roof into the building.

In circumstances where the interior of a building is very hot due to generation of heat within the building, cooling the roof can transfer the internal heat to the outside of the roof. The cooler the roof is, the greater the amount of internal heat that will be transferred to the roof, where it is dissipated.

Evaporative roof cooling can be used as a stand-alone system or in conjunction with a mechanical air-conditioning system or energy management program.

A

B

Sprinkool Systems International, Inc.

Figure 34-19. Roof misting system. A—The system consists of a network of piping and spray heads, creating a cooling field. B—Individual spray head.

Copyright Goodheart-Willcox Co., Inc.

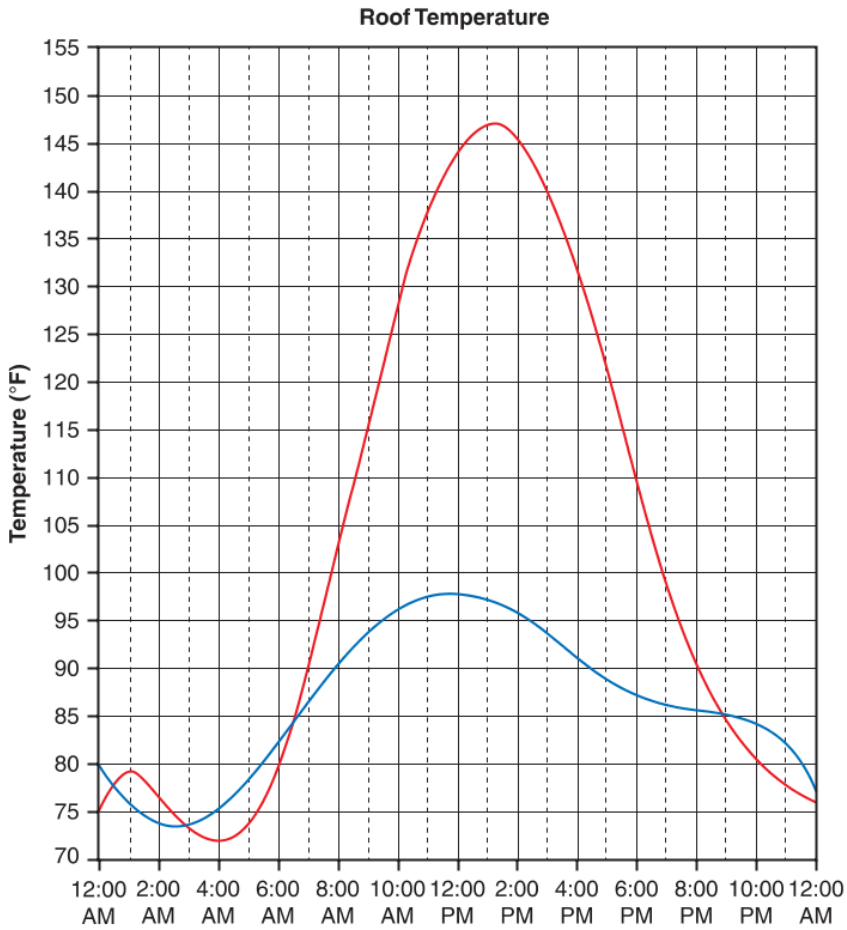

Sprinkool Systems International, Inc.

Figure 34-20. Graph showing the real-time temperature reductions using a roof cooling system (RCS). The red line denotes the roof temperature with the system off. The blue line indicates the roof temperature with the system on.

Copyright Goodheart-Willcox Co., Inc.

Chapter Review

Summary

- An absorption refrigeration system uses heat energy to drive the refrigeration process. Both compression and absorption refrigeration systems use evaporators and condensers, but instead of using a compressor, absorption systems use a generator.
- The two classifications of absorption refrigeration systems are intermittent and continuous-cycle. Intermittent systems do not have a constant power source; therefore, they run on a single charge for a given amount of time. Continuous-cycle systems have a constant power source; therefore, they run as long and often as needed.
- Absorption systems can use ammonia as the refrigerant and water as the absorbant, or water as the refrigerant and lithium bromide as the absorbant. The heat needed to run an absorption system can come from many sources, including natural gas, LP gas, kerosene, steam, solar energy, and electricity.
- In a typical absorption chiller, heat supplied to the generator boils refrigerant out of a refrigerant-absorber solution. The solution, which contains very little refrigerant (weak solution), then travels to the absorber. The refrigerant vapor passes to the condenser, where it is changed to a liquid. The liquid refrigerant passes through a restriction, into the evaporator where it turns into refrigerant vapor again. As it evaporates, it absorbs heat from the water in the cooling coil. The refrigerant vapor travels into the absorber, where it is reabsorbed by the solution, returned to the generator, and begins the cycle again.
- Residential absorption chillers are typically installed outside on a slab. The cooling coil is installed in the plenum of the air handler. Controls for such systems can include gas valves, ignition system, flame detectors, chilled water switches, and time delays for heating and cooling.
- The capacity of an absorption chiller system is dependent on ambient air temperature and the temperature of the chilled water. The capacity is directly proportional to the temperature of the chilled water leaving the system and inversely proportional to ambient air temperature.
- Commercial absorption systems may be direct-fired or indirect-fired. Direct-fired systems use a burner or other heat source inside the system to directly heat the solution in the generator. Indirect-fired systems use piped-in steam, hot water, or hot gas to heat the solution in the generator.
- Absorption systems can be further classified as single-effect or double-effect systems. In single-effect systems, all of the heat absorbed during the condensation of the refrigerant is rejected from the system through a cooling tower. In a double-effect system, some of the heat from the high-temperature generator is used to create additional vapor in the low-temperature generator.
- Some commercial absorption systems use ammonia as the refrigerant and water as the absorbant. Other systems use water as the refrigerant and lithium bromide as the absorbant.
- Some simple evaporative cooling systems, like those used in some greenhouses, draw air through a wetted medium into the space to be cooled. This cools the air being drawn in and increases its humidity.
- Evaporative cooling can be used to cool roofs in order to prevent the transfer of heat from the roof to the interior of the building or to transfer heat from inside a building to outside. Roof cooling systems are usually ponds or mists.
- A roof pond is a shallow pool of water that continuously evaporates and is replenished, cooling the roof. A roof mist cooling system sprays a precise amount of water onto the roof. The water evaporates quickly, cooling the roof in the process.

Review Questions

Answer the following questions using the information in this chapter.

1. While compression systems use mechanical energy to power refrigeration, absorption systems use _____ energy to do the same.
   A. heat
   B. magnetic
   C. mechanical
   D. nuclear

Copyright Goodheart-Willcox Co., Inc.

2. In an absorption system, a substance that soaks up the refrigerant returning from the evaporator is called the _____.
   A. absorbant
   B. affinity
   C. precooler
   D. restrictor
3. Which of the following is the process in which a solid attracts and holds a substance on its outer surfaces?
   A. Absorption.
   B. Adsorption.
   C. Subcooling.
   D. Superheating.
4. Which of the following is the process in which a substance attracts and combines with another substance to form a uniform solution?
   A. Absorption.
   B. Adsorption.
   C. Subcooling.
   D. Superheating.
5. When an absorption system is operating, high pressure is maintained in the _____.
   A. absorber and generator
   B. condenser and evaporator
   C. condenser and generator
   D. evaporator and generator
6. When a solution in an absorption system is saturated with refrigerant, it is a(n) _____ solution.
   A. affinity
   B. cogeneration
   C. strong
   D. weak
7. In an absorption system, refrigerant is boiled out of the refrigerant-absorber solution in the _____.
   A. absorber
   B. condenser
   C. evaporator
   D. generator
8. Which of the following may be used for a heat source in absorption chillers?
   A. Natural gas.
   B. Steam.
   C. Electricity.
   D. All of the above.
9. In a residential absorption chiller, the _____ is installed in the air handler plenum.
   A. absorber
   B. evaporator
   C. generator
   D. water-type cooling coil
10. When an absorption heat pump is in heating mode, _____.
    A. the evaporator acts like a condenser
    B. the condenser acts like an evaporator
    C. the generator acts like an absorber
    D. All of the above.
11. Which of the following statements regarding an indirect-fired absorption system is true?
    A. Indirect-fired absorption systems do not have a generator.
    B. Indirect-fired absorption systems must have a secondary (low-temperature) generator.
    C. Steam, hot water, or hot gas is produced away from the system and delivered through pipes.
    D. All of the above.
12. Which of the following best explains the difference between a double-effect absorption system and single-effect absorption system?
    A. A double-effect system has a lower operating efficiency than a single-effect system.
    B. A double-effect absorption system has both a primary and secondary generator.
    C. A double-effect absorption system requires less heat input to operate than a single-effect system.
    D. In a double-effect absorption system, the function of the absorber and condenser are combined in a single chamber.
13. Which of the following is *not* true when an absorption system changes from cooling to heating mode?
    A. Cooling water is shut off.
    B. The generator produces no heat.
    C. One or more valves change position.
    D. Water sent to the conditioned space is warmed.
14. Which of the following statements regarding ammonia absorption systems is *not* true?
    A. Ammonia acts as the refrigerant.
    B. Water boils out of the solution in the generator and condenses in the condenser.
    C. Water acts as the absorbant.
    D. All of the above.

Copyright Goodheart-Willcox Co., Inc.

15. Which of the following statements regarding lithium bromide absorption systems is *not* true?
    A. Lithium bromide acts as the refrigerant.
    B. Water acts as the absorbant.
    C. Lithium bromide is reabsorbed by the weak solution in the absorber.
    D. All of the above.
16. Using waste heat from one process to power another process is referred to as _____.
    A. coadaptation
    B. cogeneration
    C. polyreabsorption
    D. power derivation
17. For servicing ammonia absorption systems, it is important that the gauge manifold, valves, lines, and fittings used should *never* be made of _____.
    A. aluminum
    B. cast iron
    C. copper
    D. steel
18. A water and lithium bromide solution should *not* be exposed to air to prevent the solution from becoming _____.
    A. bitter
    B. corrosive
    C. explosive
    D. nuclear
19. Roof misting and roof ponds are examples of _____ cooling systems.
    A. absorption
    B. evaporative
    C. excelsior
    D. trigeneration
20. Wet roof cooling is most effective in _____ climates.
    A. cool, dry
    B. cool, humid
    C. hot, dry
    D. hot, humid

Copyright Goodheart-Willcox Co., Inc.

CHAPTER 35 Humidity Control

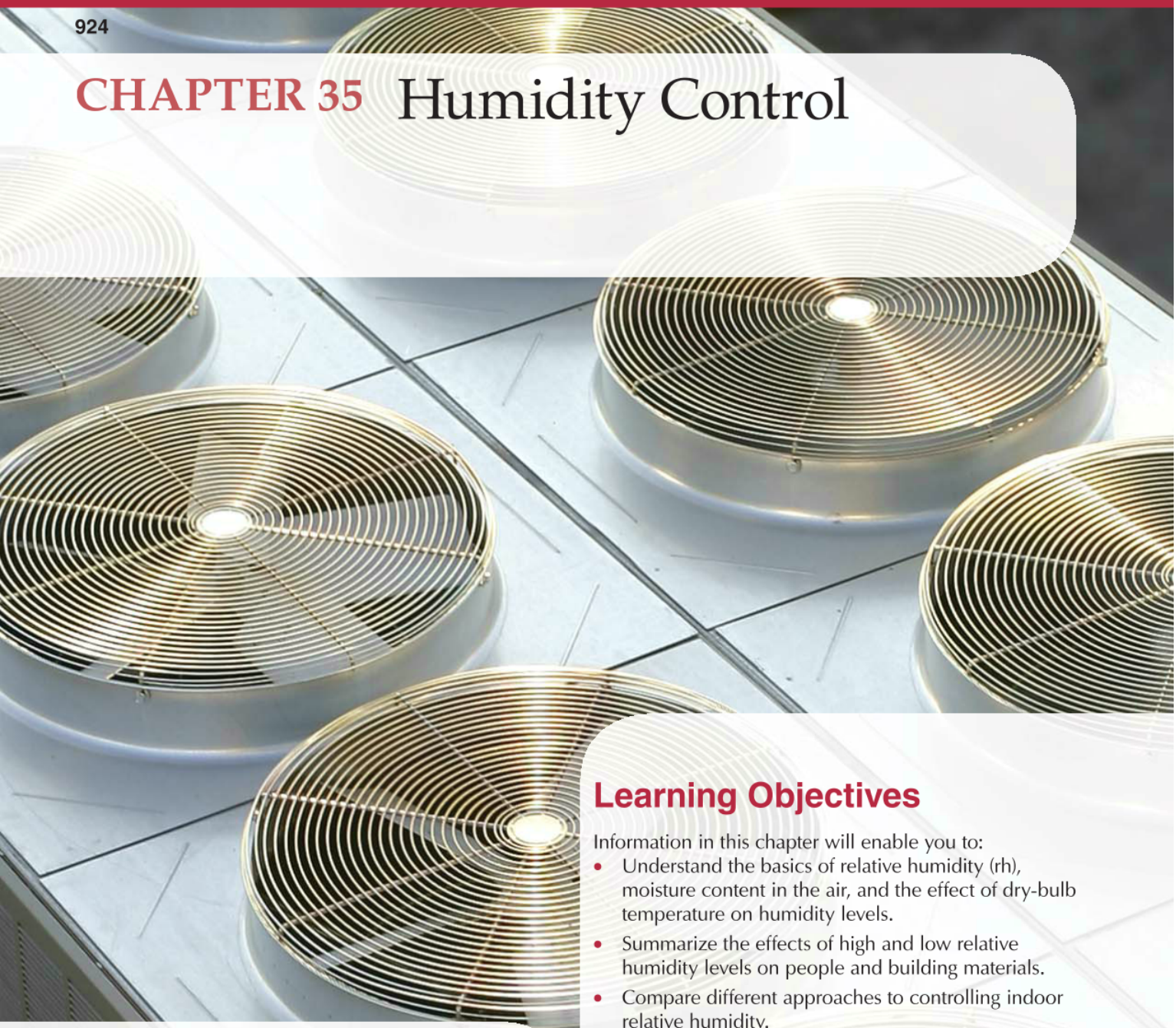

Learning Objectives

Information in this chapter will enable you to:

- Understand the basics of relative humidity (rh), moisture content in the air, and the effect of dry-bulb temperature on humidity levels.
- Summarize the effects of high and low relative humidity levels on people and building materials.
- Compare different approaches to controlling indoor relative humidity.
- Understand how humidistats control humidifiers and dehumidifiers.
- Compare the design and operation of evaporative humidifiers, atomizing humidifiers, and vaporizing humidifiers.
- Explain the different ways water is supplied to humidifiers and compare the different type of water that can be used (hard, naturally soft, softened, demineralized, and distilled).
- Summarize the design and operation of a typical dehumidifier.
- Understand the steps involved in humidifier installation and service.

Chapter Outline

35.1 Humidity Levels and Comfort
35.1.1 Humidifier Basics
35.1.2 Humidistats
35.2 Types of Humidifiers
35.2.1 Central Humidifier Designs
35.2.2 Portable Humidifiers
35.3 Dehumidifying Equipment
35.3.1 Dehumidifiers
35.3.2 Use of Desiccants
35.4 Servicing and Installing Humidifiers

Technical Terms

air changes per hour (ACH)
atomizing humidifier
bypass humidifier
central humidifier
dehumidifier
demineralized water
desiccant
evaporative humidifier
fixed filter humidifier
humidifier
humidistat
hygroscopic element
impeller humidifier
medium hard water
nozzle-type humidifier
piezoelectric crystal
piezoelectric (ultrasonic) humidifier
plate humidifier
plenum-mounted humidifier
portable humidifier
rotating disk humidifier
rotating drum humidifier
soft water
softened water
under-duct humidifier
vaporizing humidifier
very hard water

Review of Key Concepts

Reviewing these concepts from earlier chapters will help you understand new concepts presented in this chapter:

- Latent heat is heat that changes the physical state of a substance, such as ice melting or water evaporating. (Chapter 4)
- Since the evaporation of a substance, such as water into vapor, requires it to absorb heat, there is a cooling effect around the substance from where the heat is drawn into the substance. (Chapter 4)
- Since the condensing of a substance, such as vapor into water, requires it to expel heat, there is a warming effect around the substance. (Chapter 4)
- Humidity is the presence of moisture or water vapor in the air. Humidity is moisture in vapor form, and it is invisible. (Chapter 27)
- The amount of moisture that air will hold depends on the air temperature. Warm air holds more moisture than cold air. (Chapter 27)
- Relative humidity (rh) is a term used to express the amount of moisture in an air sample compared to the total amount of moisture the same sample would hold if it were completely saturated at the same temperature. (Chapter 27)
- Relative humidity is stated as a percentage. Air with a relative humidity of 25% contains only one-fourth of the moisture it is capable of holding. (Chapter 27)
- Dew point is the temperature below which water vapor in the air will start to condense. It is the temperature at which air will have 100% relative humidity. (Chapter 27)

Introduction

Good, complete air-conditioning systems must provide heat, remove heat, and clean and circulate the air. Most systems accomplish all of these tasks. However, many systems do not completely control the relative humidity of the air. To control relative humidity, there must be two devices in the system ready to be used at any time, winter or summer:

- A device to add water vapor to the air (humidifier).
- A device to remove water vapor from the air (dehumidifier).

In some central air-conditioning systems, a humidistat causes the system to operate if the air is too moist. The evaporator is located in the plenum chamber of the central air-conditioning system. When the air-conditioning system is operating, the cold surfaces of the evaporator will condense out moisture, drying the air. This method provides fairly effective humidity control during the cooling season.

Another method of controlling humidity is to bring in and mix cool air and warm air to achieve the desired temperature and relative humidity. Both cool and warm air should have a normal (50%) relative humidity. By mixing these air volumes in different proportions, the needed temperature and relative humidity conditions can be produced.

Video

- Installing a Whole House Humidifier

35.1 Humidity Levels and Comfort

Relative humidity (rh) is a ratio of the moisture content in the air compared to the maximum amount of moisture that the air can hold at its current temperature. As air is heated, it is able to hold more moisture, so its relative humidity decreases (unless additional moisture is added). For example, when outside air at 30°F (–1°C) and 90% rh is heated to 72°F (22°C), its rh drops to about 18%. The amount of moisture in the air is the same, but humidity has dropped. The psychrometric chart in **Figure 35-1** shows this relationship.

Human comfort requires a relative humidity between 30% and 50%. A lower relative humidity results in dry skin, mouth, nose, and throat. A low relative humidity also causes hygroscopic materials to lose moisture. Examples of common hygroscopic materials include natural wood fibers (wood furniture and woodwork) and most foods. Low relative humidity can cause wood to crack and furniture joints to get loose. Dry air also promotes the generation of static electricity. To increase relative humidity, moisture must be added to the air.

Typical indoor moisture sources are plumbing devices, cooking, and perspiration. In fact, all water-based activities in a building increase the relative humidity. Perspiration and respiration of humans and animals increase relative humidity. In addition, moisture in the air can be increased and controlled with humidifiers.

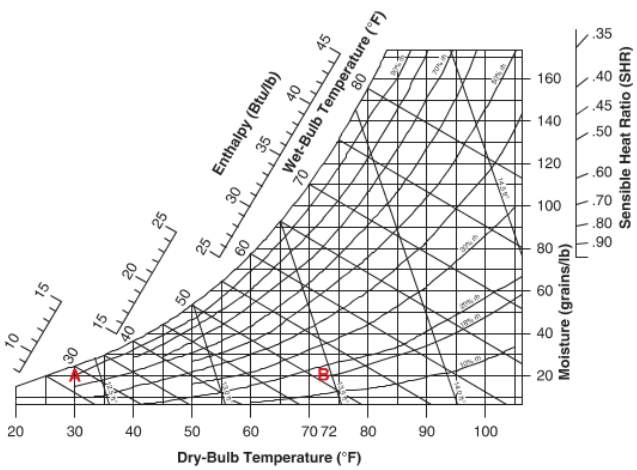

Goodheart-Willcox Publisher

Figure 35-1. This graph shows that an increase in dry-bulb temperature results in a decrease in relative humidity but a constant moisture content (grain/lb). A—Starting point. The air is at 30°F (–1°C) with a 90% rh. B—The air sample is heated from 30°F (–1°C) to 72°F (22°C) without adding any water vapor. As a result, the relative humidity decreases from 90% to 18%.

Too much humidity may cause swelling of hygroscopic materials (such as wood products). It may cause condensation on cold surfaces, such as windows, window frames, and doors. Water vapor may also condense on the inner surface of outside walls. Wood frames can rot from water dripping off cold glass window panes. Mold can grow and rot can occur if a home's relative humidity level is maintained above 50%. At a relative humidity of 70%, mold thrives.

During the heating season, the windows and exterior walls of a building can often be much colder than the indoor air temperature. If the temperature of the walls or window panes falls below the dew point of the indoor air, condensation will form. This condensation can drip onto wood and drywall surfaces where it will support mold growth, mildew, and rot. For this reason, it is sometimes necessary to lower the humidity indoors when the temperature outside is extremely cold. Although drier air might not be as comfortable in the short term, it will help prevent condensation from forming and the damage and health problems that can result from it.

The chart shown in **Figure 35-2** identifies the recommended indoor relative humidity levels for various outdoor temperatures. The recommended indoor relative humidity is 40% when the indoor temperature is 72°F (22°C) and the outdoor temperature is 30°F (–1°C). If the temperature outside drops to 0°F (–18°C), the recommended indoor relative humidity level would be 25%. A higher relative humidity level would increase the risk of condensation forming. If the indoor temperature is cooler than 72°F (22°C), the recommended indoor relative humidity levels would be slightly higher than those listed. If the indoor temperature is above 72°F (22°C), the recommended relative humidity levels would be slightly lower.

Recommended Indoor Relative Humidity Based on Outdoor Temperatures

Outside Temperature	Recommended Inside RH (at 72°F)
–10°F	20%
0°F	25%
10°F	30%
20°F	35%
30°F	40%

Goodheart-Willcox Publisher

Figure 35-2. This chart shows the recommended inside relative humidity based on outside air temperature when inside temperature is kept at 72°F (22°C).

Copyright Goodheart-Willcox Co., Inc.

35.1.1 Humidifier Basics

The term ***humidifier*** refers to equipment that adds water vapor to the air. For example, imagine a system where the air returning to a warm air furnace is 60°F (16°C) with 25% rh. The furnace heats the air to 140°F (60°C), and a humidifier adds moisture to the warmed air. This heated air is then mixed with the air in the room.

The graph in **Figure 35-3** shows the effects of the heating and humidifying process. The line from A to B represents the air being heated. The line from B to C represents the warm air passing over the humidifier. The temperature of the air decreases, but the latent heat in the air increases, so the total heat remains constant. Remember, it requires about 1000 Btu to vaporize each pound of water. The dotted line between C and A represents all of the possible temperature and relative humidity combinations that can be created by mixing various ratios of the heated and humidified air with untreated air. D indicates the final condition of the air as it is delivered to the conditioned space.

The ideal relative humidity for a room depends on personal preference. Some people like more humidity than others. As a general rule, relative humidity should be maintained at about 30%. During extremely cold weather, a home loses humidity. Cold air inside a home being heated to 73°F can have a relative humidity as low as 6%. As a comparison, the humidity in the Sahara Desert is approximately 25%.

Too much moisture in the air may result in the formation of bacteria and fungus, and too little moisture can dry out building materials and skin. The amount of moisture required to maintain a relative humidity of 30% can be significant. For example, it may require the addition of up to 25 gallons of water to the air of a 3,000 square foot home to maintain 30% relative humidity at 72°F (22°C).

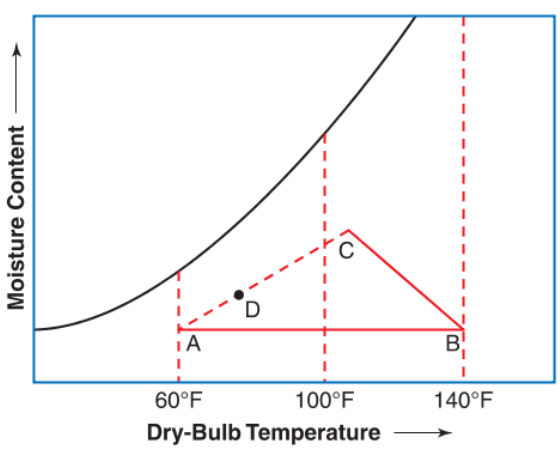

Goodheart-Willcox Publisher

Figure 35-3. This psychrometric chart depicts a warm air recirculating heating cycle. A—Cold air return. A to B—Heating in furnace. B to C—Humidifying air. C to A—Range of conditions available by mixing warmed and humidified air with room air. D—Final condition after mixing.

Humidifiers are used to add needed moisture (water vapor) to room air. A ranch home that is 25′ × 60′ with 8′ ceilings has a volume of 12,000 ft^3. Up to 16 gallons of water may need to be added to the air per day. The amount of water needed would be impacted by the relative humidity of the intake air entering the building. If air entering the space has a high moisture or humidity level, less water would need to be added.

Air changes per hour (ACH) is a measure of how many times the entire volume of air within a defined space is replaced in one hour. It is used to measure the ventilation rate. The following formula can be used to calculate the number of air changes necessary in a building:

$$\text{Air changes per hour} = \frac{\text{airflow (in cfm)} \times 60 \text{ min}}{\text{volume of room (cubic feet)}}$$

35.1.2 Humidistats

A ***humidistat*** is a control device that responds to changes in humidity and activates and deactivates parts of the humidity control system, such as humidifiers, dehumidifiers, or air mixers as needed. It is usually located in the same room as the temperature controls. In humidifiers, the humidistat closes the circuit when humidity decreases (drops). On a dehumidifier, the humidistat closes the circuit when the humidity increases (rises). See **Figure 35-4**.

Humidistats are typically adjustable to maintain relative humidity between 20% and 90%. Most humidistat sensing elements should be mounted on a return air duct at a minimum of 6″ upstream of the bypass duct or humidifier. A humidifier's solenoid valve opens only when the furnace and blower are running. If the water is still flowing when the furnace is not running, there is a bad connection or valve that is not seated properly. **Figure 35-5** shows two humidistats.

The sensing element of a traditional electromechanical humidistat is called a ***hygroscopic element***. Such an element stretches as the moisture content of the air increases and shrinks as humidity decreases. Commonly used hygroscopic elements include human hair, wood, nylon ribbon, and membranes.

Electronic humidistats are equipped with solid-state sensors in place of a hygroscopic element. In an electronic humidistat, the sensor resistance changes as the moisture content of the air changes. Some materials used in solid-state sensors include:

Copyright Goodheart-Willcox Co., Inc.

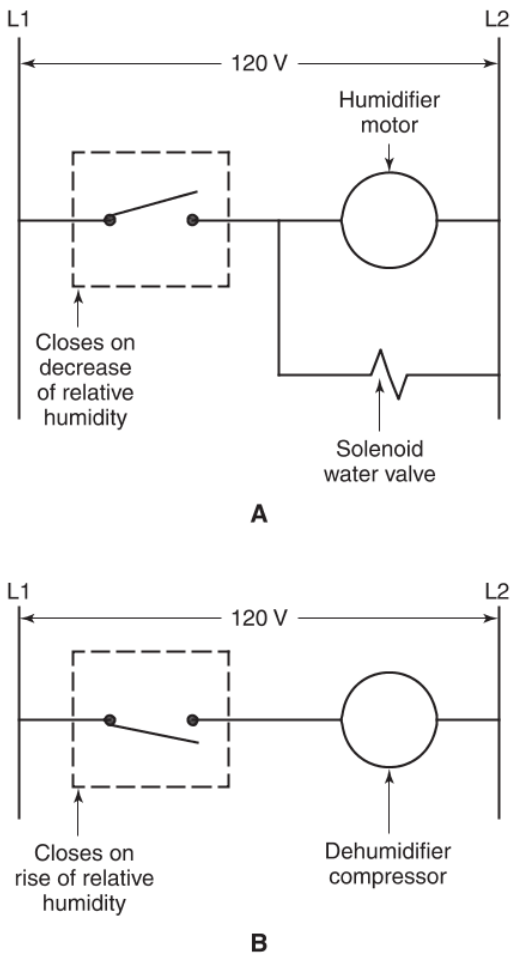

Goodheart-Willcox Publisher

Figure 35-4. This diagram shows the role of a humidistat in a humidifier and in a dehumidifier. A—In a humidifier, the humidistat energizes the solenoid water valve and humidifier motor when humidity drops below a set level. B—In a dehumidifier, the humidistat activates the dehumidifier compressor when the relative humidity rises above a set level.

General Filters, Inc.

Figure 35-5. Humidistats are available with analog dial adjustments or incremental digital adjustments for controlling relative humidity.

- Hygroscopic salt (for example, lithium chloride).
- Carbon particles embedded in a hygroscopic material.

In these substances, the resistance decreases as the humidity increases. An electronic humidistat recognizes the changes in resistance in these materials and generates a corresponding output signal.

The change in size, shape, or electrical resistance of the sensing element is used to operate a switch that activates or deactivates a humidity control system, like a humidifier or dehumidifier, or triggers a damper actuator. An electronic humidistat varies its output current based on an internal resistance that changes with humidity.

35.2 Types of Humidifiers

Humidifiers can be attached into ductwork, in which case they add moisture to the air before it leaves the supply ducts and enters the conditioned space. These types of humidifiers are referred to as *central humidifiers*. Humidifiers can also be standalone units that are placed in the spaces where the humidity level is to be maintained. These types of humidifiers are referred to as *portable humidifiers*.

35.2.1 Central Humidifier Designs

Central humidifiers are humidifying units that are incorporated into an HVAC system through bypass

Copyright Goodheart-Willcox Co., Inc.

ductwork or by installing directly into the return or supply ductwork. These installations may vary by manufacturer.

A ***bypass humidifier*** humidifies bypassed air that flows from the supply air plenum into the return air plenum. A certain amount of conditioned air in the supply plenum flows through a bypass duct, into the humidifier, and back into the return plenum. Not all of the conditioned air follows this bypass route. The air that is bypassed is humidified, **Figure 35-6**.

The pressure difference between the lower pressure return plenum and the higher pressure supply plenum forces some air from the supply plenum through the bypass humidifier and into the return plenum just ahead of the furnace. During the cooling season, a damper in the bypass duct is closed to prevent air from passing through the humidifier, **Figure 35-7**.

For central humidifiers that are not the bypass type, there are two ways to install it into ductwork. A ***plenum-mounted humidifier*** is installed through the side of a return or supply ductwork. An ***under-duct humidifier*** is installed through the bottom of a return or supply ductwork.

Humidifiers can be further classified based on the way they add moisture to the air. There are three main categories of humidifiers: evaporative humidifiers, atomizing humidifiers, and vaporizing (steam) humidifiers.

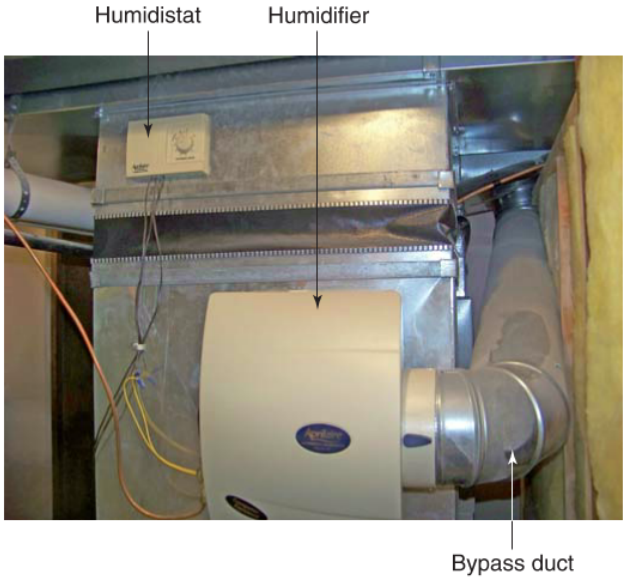

Goodheart-Willcox Publisher

Figure 35-6. This bypass humidifier is mounted on the return supply plenum. A bypass duct from the supply plenum connects to the humidifier.

General Filters, Inc.

Figure 35-7. Air flows through this bypass humidifier by entering from behind and exiting out the side. In summer, when a humidifier will not be used, the bypass passage may be closed by the seasonal damper.

Evaporative Humidifiers

Evaporative humidifiers add moisture to the air through evaporation. In general, these humidifiers contain an element that is kept damp. As air is forced through the humidifier, some of the moisture in the element evaporates, increasing the humidity of the air. There are four main types of evaporative humidifiers:

- Plate humidifiers (low-capacity).
- Fixed filter humidifiers.
- Rotating drum humidifiers (for restricted spaces).
- Rotating disk humidifiers.

Plate Humidifiers

Plate humidifiers consist of a series of porous plates and a water pan. The pan is typically equipped with a float valve, which regulates the water level. The porous plates are arranged so their bottom portions are submerged in the water pan. The porous material acts like a wick, drawing water up through the plate. As air passes through and around the plates, some of the water in the plates evaporates, increasing the humidity of the air. As the water evaporates out of the plates, additional water is drawn up through the plates by capillary action. Plate humidifiers generally have a lower capacity than other types of humidifiers. Also, their effectiveness decreases as the evaporating water leaves behind mineral buildup that clogs the porous material.

Copyright Goodheart-Willcox Co., Inc.

Fixed Filter Humidifiers

In a *fixed filter humidifier,* a pad consisting of numerous layers of a tight metallic mesh is wetted by water metered through a solenoid valve. Evaporation takes place as heated air passes through the evaporator pad. Water that has not evaporated flows to the bottom of the humidifier and is drained out. Humidified air is then returned to the heating system and enters the living area.

This type of humidifier is equipped with a solenoid water valve to regulate water flow, and can be a bypass or plenum-mounted type. **Figure 35-8** shows an under-duct humidifier that uses a fixed filter.

Rotating Drum Humidifiers

The main components of a *rotating drum humidifier* are a water pan and a rotating drum. The drum is covered in an absorbent filter sleeve and the bottom portion of it is submerged in the water pan. As the drum rotates, it soaks up water from the water pan. Moisture in drum filter sleeve material then evaporates as the moistened section of the filter sleeve is rotated into the airstream, **Figure 35-9**.

Figure 35-10 shows a typical under-duct rotating drum humidifier. A float in the water pan opens and closes a water supply valve to maintain a constant water level in the pan. The water for the humidifier is typically supplied by the building's potable water lines.

Drum humidifiers may be wired to run when the furnace operates or when the air handler blower operates. Two types of installation are common: bypass and under-duct. For a bypass installation, a standalone drum humidifier may be installed with a bypass duct running from the furnace plenum to the humidifier. An under-duct drum humidifier is installed into the bottom of a duct. In both cases, heated air passes over the wet, rotating drum and absorbs moisture. The humidified air is then reheated in the furnace and distributed throughout the house.

Drum humidifiers should be inspected annually. Their sleeves should be checked for wear and cleaned

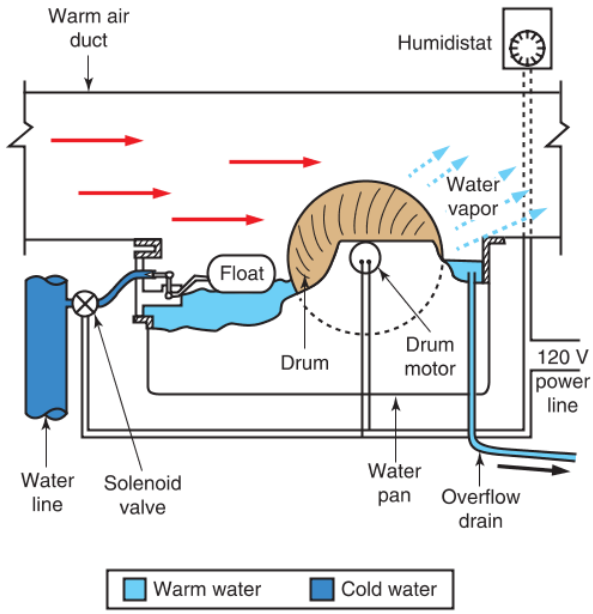

Goodheart-Willcox Publisher

Figure 35-9. Illustration of an under-duct humidifier using a rotating drum to add moisture to the plenum air.

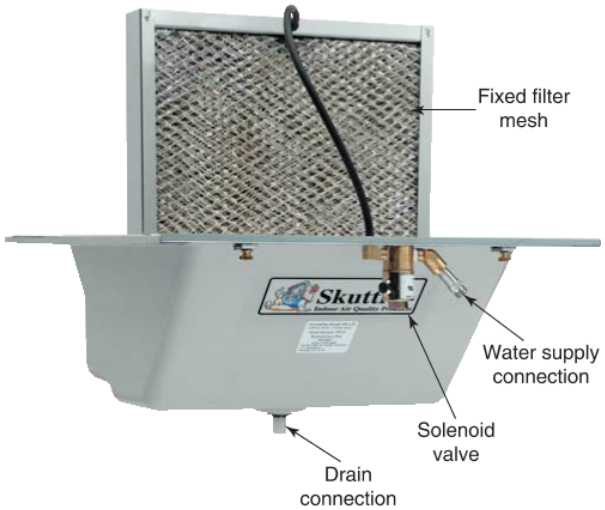

Skuttle IAQ Products

Figure 35-8. When a fixed filter humidifier's solenoid valve opens, water flows down across the mesh medium. Heated air circulating through the ductwork evaporates the dropping water.

Skuttle IAQ Products

Figure 35-10. A rotating drum humidifier consists of a motorized drum with an absorbent filter sleeve, a water pan, and a float-operated water supply valve.

Copyright Goodheart-Willcox Co., Inc.

or replaced as needed. Float mechanisms should be checked for calcium buildup and cleaned. Always replace the sleeve with the correct replacement part.

Rotating Disk Humidifiers

Rotating disk humidifiers are similar to rotating drum humidifiers, but instead of having a single rotating drum covered by an absorbent sleeve, they have a series of plastic disks covered with shallow grooves. Like the drum in a rotating drum humidifier, the disks in a rotating disk humidifier are partially submerged in a water pan. Water clings to the grooves as the disks are rotated. As air passes around the disks, the residual water on the disks evaporates, adding moisture to the air.

Pro Tip

Rotating Disk Humidifier Applications

Because the disks do not deteriorate the way an absorbent drum sleeve deteriorates, less maintenance is required. Because there is no porous material to clog or deteriorate, this type of humidifier is often recommended for situations where only hard water is available.

Atomizing Humidifiers

An *atomizing humidifier* sprays small water droplets into the air, either by mechanically flinging water against a diffuser or by forcing it through a nozzle, atomizing the water. The atomized moisture evaporates easily in dry, warm environments.

There are three main types of atomizing humidifiers:

- Nozzle-type humidifiers.
- Impeller-type humidifiers.
- Piezoelectric (ultrasonic) humidifiers.

Nozzle-Type Humidifiers

In a *nozzle-type humidifier*, water is forced through a restrictive nozzle, which creates a very fine mist. That fine mist is injected directly into the supply airflow, where it evaporates, raising relative humidity. Since this type of humidifier does not have a water reservoir, there is no risk of problems associated with stagnant water.

Pro Tip

Nozzle Clogging

The nozzle on nozzle-type humidifiers can easily become clogged with minerals from the water. If possible, filter the supply water. If not possible, then regularly clean the nozzle.

Impeller Humidifiers

Impeller humidifiers have a spinning disk that flings water against a diffuser, which atomizes the water on impact. The water droplets then enter the airstream, where they evaporate, raising the relative humidity of the air.

Piezoelectric (Ultrasonic) Humidifiers

Piezoelectric (ultrasonic) humidifiers use a vibrating element to atomize water (break it up into tiny droplets). Often, the vibrating element is a *piezoelectric crystal*. A piezoelectric crystal is an electronic device that vibrates when electric current is run through it. The crystal operates at a high frequency of about 100 kHz (100,000 cycles per second). See **Figure 35-11**.

A piezoelectric humidifier produces moist air that feels cool when it comes in contact with the body. This is because the tiny droplets of water in the air quickly vaporize when they contact a warmer object. A piezoelectric humidifier is shown in **Figure 35-12**.

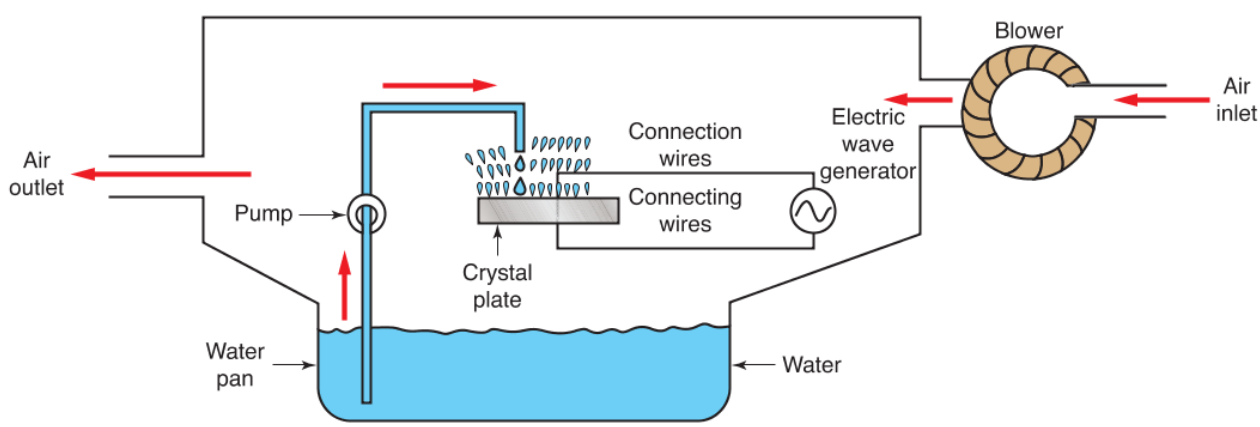

Goodheart-Willcox Publisher

Figure 35-11. In this type of humidifier, a piezoelectric crystal vibrates to break water into mist. Note that the crystal plate size is exaggerated for clarity.

Copyright Goodheart-Willcox Co., Inc.

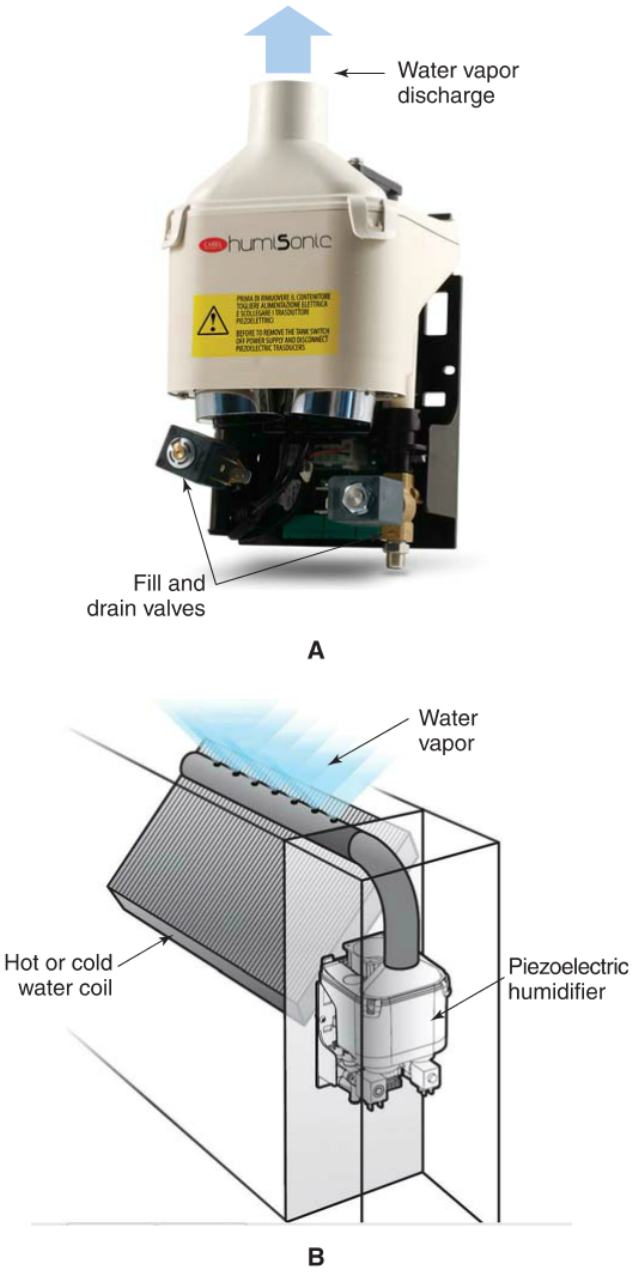

with permission from Carel Industries - all right reserved

Figure 35-12. A—Piezoelectric humidifier. B—Diagram of a piezoelectric humidifier installed in a fan coil unit.

Vaporizing (Steam) Humidifiers

Evaporative and atomizing humidifiers rely on heat in the airstream to evaporate water. These systems work well when the air in the supply ducts is very warm. However, the cooler the supply air is, the less effective the humidifiers operate. Evaporative and atomizing humidifiers may not provide adequate humidification when used with certain warm-air heating systems, like low-temperature heat pumps.

Unlike evaporative and atomizing humidifiers, ***vaporizing humidifiers*** use their own heat source (electric heating coils) to create steam. This steam is then added to the air to increase its humidity. Rather than relying on the heat of the warm air, vaporizing humidifiers can accurately control their steam production using their own heat source.

An adjustable humidistat controls the electric heating coil. When the humidistat turns on a vaporizing humidifier, its water supply solenoid valve opens to fill the water reservoir. When the water level touches the water level probe, the solenoid valve closes, and the electric heater begins heating the water. Steam rises from the water reservoir and travels through tubing to enter the airstream leaving the furnace, increasing the humidity, **Figure 35-13**.

Vaporizing humidifiers are relatively easy to install. They may be designed to be installed in a duct or plenum chamber or installed remotely with a small duct connecting its steam chamber to the ductwork. Vaporizing humidifiers may be used in buildings using steam, hydronic, or warm-air heating systems.

Central Humidifier Water Supply

In most central humidifiers, water is supplied to the humidifier through potable (suitable for drinking) water lines. Typically, a saddle valve is used to tap into one of the home's water lines. Then, compression fittings are used to connect tubing between the saddle valve and the humidifier's water supply valve, **Figure 35-14**.

General Filters, Inc.

Figure 35-13. A vaporizing (steam) humidifier's front panel conceals controls, hardware, and the steam cylinder.

Copyright Goodheart-Willcox Co., Inc.

Code Alert

Accessing Domestic Water

When dealing with water, be aware of local building and plumbing codes. Some jurisdictions require that access to a water line include a T-fitting and a permanent shut-off valve instead of a saddle valve. Codes may also place restrictions on the use of compression fittings. Check with local building authorities before beginning work on such a project. Note that this often applies to water accessed for central humidifiers and also ice makers and water dispensers for refrigerator-freezers.

Water from city water mains or from wells contains various types of foreign matter. If the water is to be used in a humidifier, this foreign matter should be treated or removed. The quality of water varies with its source:

- ***Soft water*** is natural, untreated water with a low mineral content of less than 5 grains of hardness per gallon and no chlorides. The natural source is rainwater.
- ***Softened water*** is water in which minerals have been removed by the ion exchange process (as with a water softener). When water is softened, unwanted mineral ions are replaced with water-soluble sodium salts.
- ***Demineralized water*** is water that has been treated to remove minerals.
- ***Medium hard water*** (well water) is untreated water with 5 to 15 grains/gal. of mineral content.
- ***Very hard water*** (well water) is untreated water with over 15 grains/gal. of mineral content.

Hard water is tested by using a water hardness test kit. These kits include two strips that are dipped into the water source. The resulting color change indicates the hardness of the water. Consult a reference chart for recommendations for water filtration.

Ideally, distilled water would be used in humidifiers because it does not put any foreign matter into the air. In addition, it leaves no deposits in the humidifier or in the duct system. Although distilled water would be the best type of water for a humidifier, it is not available in sufficient quantity for use in central humidifiers. City water is often used and results in minimal calcium buildup and corrosion of metal parts. Annual cleaning of a humidifier will help prevent failures. In areas that have hard or very hard well water, a water softener is often used to remove minerals from the home's water supply. Humidifiers that operate with well water and softened well water may require more frequent maintenance.

35.2.2 Portable Humidifiers

Central humidifiers can be easily added to forced-air heating systems. However, central humidifiers cannot always be added to heating systems that use hydronics, steam, or electric heat. Also, some buildings may not need humidification in every room. In such cases, occupants may decide to use a portable humidifier.

A ***portable humidifier*** is a stand-alone unit placed where a specific humidity level needs to be maintained. These are used for room humidity control, not building humidity control. **Figure 35-15** shows a typical portable humidifier.

Goodheart-Willcox Publisher

Figure 35-14. A self-tapping water valve that can be used to access potable water for humidifiers in jurisdictions where allowed.

Goodheart-Willcox Publisher

Figure 35-15. Portable humidifiers often have a water tank that needs to be removed and refilled after a cycle.

10

Copyright Goodheart-Willcox Co., Inc.

Like a central humidifier, a portable humidifier is used to maintain the relative humidity in a given space. The components of a portable humidifier are housed in a single cabinet, which is located in the room or space in which humidity is to be increased. Many portable humidifiers add moisture by circulating air across a wet filter, though some units use ultrasonic humidification.

The cabinet has air intake and outlet openings. Often, a fan circulates air through the cabinet. The wet filter is partially submerged in a reservoir filled with water. Water wicks up the filter and is exposed to the airstream. With its water tank removed, a portable humidifier's wet filter is accessed for inspection or replacement, as shown in **Figure 35-16**.

An electric heating element is sometimes installed in the water pan to warm the water for greater evaporation. The controls on a typical cabinet humidifier consist of an on-off switch and a humidistat, which controls the fan motor and other components, depending on the type of humidifier.

Some portable humidifiers use a float-operated switch that turns on an indicator light when the water level in the water pan gets too low. Most units must be refilled manually. However, some can be connected to building water supply and refilled by means of a valve controlled by an automatic float mechanism.

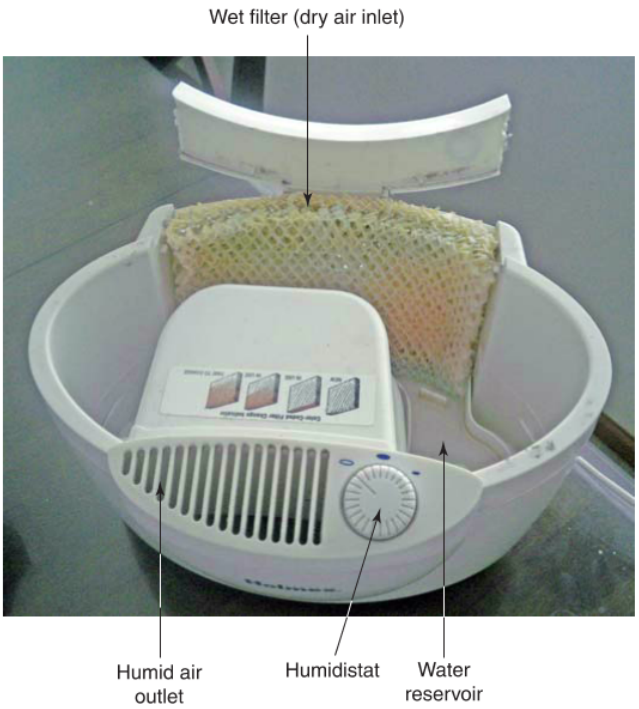

Goodheart-Willcox Publisher

Figure 35-16. With its water tank removed, a portable humidifier's wet filter is revealed. A fan draws in dry air through the wet filter.

Portable humidifiers are easily maintained. The water tank and the wet filter can be removed and cleaned or replaced. Maintenance should be performed in strict accordance with the manufacturer's schedule to keep the humidifier working properly.

35.3 Dehumidifying Equipment

Excessive humidity is a common problem that can cause discomfort to occupants, cause wood to swell, and promote the growth of mold and mildew. If a conditioned space's relative humidity is too high, some type of dehumidifying equipment may be needed. For example, buildings using electric heat frequently have high relative humidity. If a building envelope is very tight, humidity can build up as a result of normal activity. Common sources of humidity include:

- Cooking.
- Wash basins.
- Lavatories.
- Respiration.
- Perspiration.
- Laundry.
- Showers and bathing.
- Houseplants.
- Pets.

35.3.1 Dehumidifiers

A ***dehumidifier*** is a device that decreases relative humidity by condensing moisture out of the air. Dehumidifiers have a cooling coil over which air is blown. By keeping the coil temperature below the dew point of the air, moisture condenses out of the air when the air comes into contact with the cold surface.

Typically, a dehumidifier consists of a hermetic compressor, condenser, and evaporator with a capillary tube refrigerant control in a single packaged unit. A motor-driven fan forces air through the evaporator. Due to the low evaporator temperature, moisture carried in the air condenses on the evaporator surfaces. The moisture drips to the bottom of the evaporator and into the condensate trough, **Figure 35-17**.

Air flowing through a dehumidifier's evaporator coil is both cooled and dehumidified. The air then flows through the condenser coil. Heat from the condenser is transferred to the air flowing through it. Therefore, the air leaving a dehumidifier is about the same temperature as it was when it entered. However, air discharged from a dehumidifier has a lower relative humidity than its intake air.

Dehumidifiers may be standalone, portable units for spot dehumidification or units incorporated into

Copyright Goodheart-Willcox Co., Inc.

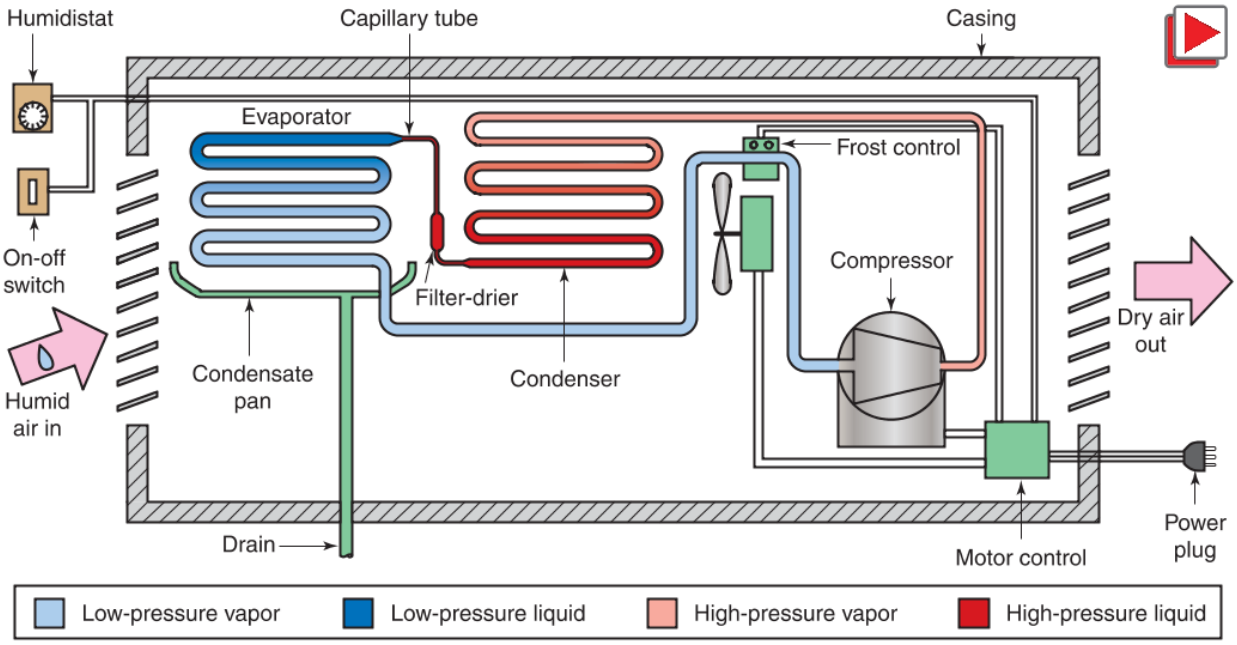

Goodheart-Willcox Publisher

Figure 35-17. The components and operation of a room dehumidifier are similar to those of a window air conditioner.

a central HVAC system for building dehumidification. Often, a house may have acceptable humidity on the ground floor and upstairs but high humidity in its basement or crawlspace. In such a case, a portable dehumidifier is the solution, **Figure 35-18**.

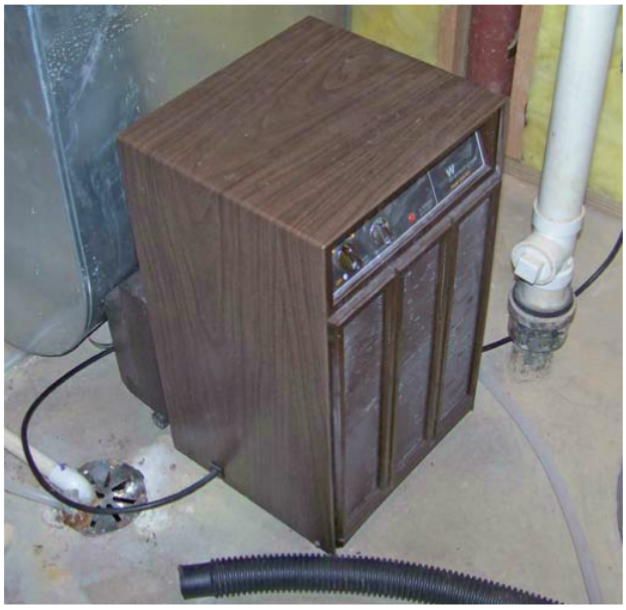

Goodheart-Willcox Publisher

Figure 35-18. This portable dehumidifier is located in a basement mechanical room.

A whole house dehumidifier is ducted into the airstream of a forced-air furnace. Air that is drawn from all the rooms of a building through the return air duct passes over the dehumidifier's evaporator coil to remove moisture. This dehumidified air then returns to the rest of the ductwork, **Figure 35-19**.

Ducting arrangements can vary by application. Some ducting arrangements require the dehumidifier to run simultaneously with the HVAC system, and others require the dehumidifier to run during the Off cycle. A dehumidifier can work with the air conditioner to balance humidity levels, or it can work independently of the air conditioner. This arrangement will affect how controls are wired.

General Filters, Inc.

Figure 35-19. A typical whole house dehumidifier. Ducts divert air through the dehumidifier and return it into the airstream dehumidified.

Copyright Goodheart-Willcox Co., Inc.

Some duct arrangements used with dehumidifiers may incorporate automatic dampers to regulate airflow to dehumidify two different zones to different levels. Some ducts may include dampers be used for fresh air inlet from outside.

A dehumidifier is usually controlled by a humidistat. However, some electronic thermostats have a built-in humidistat function. These can be used to control heating, cooling, humidity, and fresh air intake for indoor air quality control. In addition to an on-off switch and a humidistat, a dehumidifier usually has other controls for safety and optimal operation.

One such control is a float switch. If the condensate drain line becomes clogged or restricted, moisture condensed in the dehumidifier could spill out. Before spilling occurs, a float switch responds by turning off the dehumidifier's compressor, which stops the condensing and accumulation of moisture.

A dehumidifier's evaporator coil surface temperature must be kept above freezing, otherwise frost or ice could form on the coil. This could happen when a dehumidifier operates for a long time or conditioned space air is already very cool. If frost builds up enough, it could block airflow and stop dehumidifying the air. To prevent this from happening, a frost control element monitors temperature. If temperature drops too low, the frost control will turn off the dehumidifier's compressor. However, the fan will continue to operate to bring as much heat as possible to melt any frost quickly. Once the temperature rises, the frost control element will turn on the compressor to begin dehumidification again.

35.3.2 Use of Desiccants

Sometimes, dehumidification of air is accomplished with special chemicals called ***desiccants***. The chemicals are usually circulated so they are exposed to the air. Moisture from the air is adsorbed by the chemicals. The chemicals are then circulated to a different chamber where they are heated. Any moisture adsorbed by the chemicals is released as water vapor when the chemicals are heated. The moisture driven out of the chemicals is exhausted to an area outside the conditioned space. The heated, dry chemicals are then ready to repeat the process.

35.4 Servicing and Installing Humidifiers

Humidifier capacity should be based on the size of the space being conditioned and the design conditions in that space. The humidifier must be able to deliver adequate moisture to the air under all operational conditions. Once selected, humidifiers must be carefully installed. If the unit has a water reservoir, mount it so it is level in all directions. Use a spirit level to check the angle.

The water feed line should be tapped into a cold water line. This is often done in the same manner as an ice cube maker line, using a piercing or saddle valve. See **Figure 35-20**. Check with local authorities to see if this is acceptable. After water lines are connected, check for leaks.

The overflow drain tube (bleeder tube) should slant down all the way to the outlet. The outlet should be at least 1″ above the open drain to prevent siphoning of waste water back into the potable water supply.

The humidifier may be controlled by a low-voltage humidistat and a relay or by a 120 V humidistat. Electrical installation should be done according to the local electrical codes. The humidifier must be plugged into a grounded receptacle.

After installation, the unit should be turned on (electricity and water) and checked for proper operation. After each month of operation, check for bacterial growth and scale buildup inside the humidifier. If evidence of bacterial growth, algae, or scale is found in the humidifier, clean the unit thoroughly and treat the water in the reservoir on a regular schedule to prevent future problems. Water treatment compounds are available at hardware stores and HVAC supply dealers.

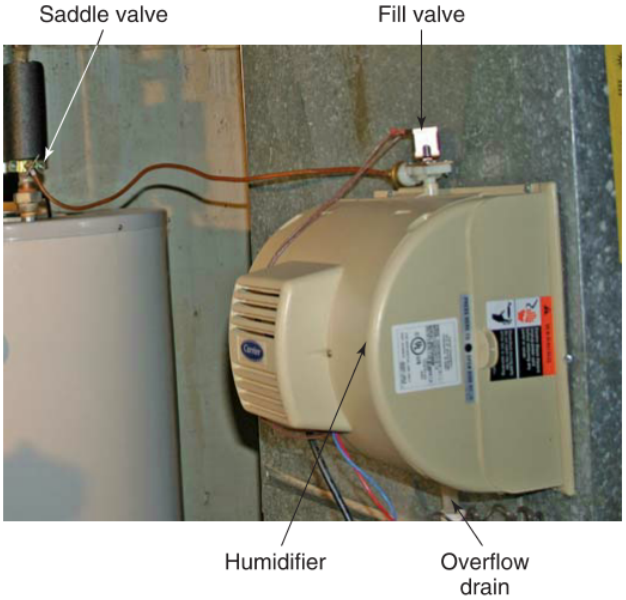

Goodheart-Willcox Publisher

Figure 35-20. A whole house humidifier with a water line tapped from the cold water supply to the water heater.

Copyright Goodheart-Willcox Co., Inc.

Chapter Review

Summary

- Relative humidity is the ratio of the moisture content of air compared to the maximum amount of moisture that the air can hold at its current temperature. The warmer air is, the more moisture it can hold. People are generally comfortable at a relative humidity between 30% and 50%.
- Low relative humidity can shrink wood and dry out skin. High humidity causes wood to swell and allows mold and mildew to grow. During the heating season, if indoor relative humidity levels are not adjusted to correspond with outdoor temperatures, condensation can form inside on walls and windows. During extremely cold weather, indoor relative humidity should be kept lower than normal.
- Humidity can be controlled in different ways. Air-conditioning systems can remove excess humidity. Humidifiers can add moisture to the air, and dehumidifiers can remove moisture from the air.
- Humidistats measure the moisture content of the air and turn on or off humidity control equipment.
- Humidifiers can be part of a central HVAC system or standalone, portable units. Central humidifiers may be installed outside the plenum using bypass ductwork or directly into the plenum.
- Humidifiers can be classified by the way they introduce moisture into the air. There are three main categories of humidifiers: evaporative humidifiers, atomizing humidifiers, and vaporizing humidifiers.
- As air passes through an evaporative humidifier, moisture from a dampened element evaporates and increases the humidity of the air. Common types of evaporative humidifiers include plate, fixed filter, rotating drum, and rotating disk.
- Atomizing humidifiers add a mist of fine water particles to the air by either flinging water or by forcing the water through a nozzle. Common types of atomizing humidifiers include nozzle-type, impeller, and piezoelectric (ultrasonic).
- Vaporizing humidifiers use a concentrated heat source to produce steam, which enters the airstream and increases humidity.
- In most central humidifier installations, water is supplied to the humidifier through the building's potable water lines. Water often contains minerals that leave a residue as the water is evaporated. The most common mineral removal process is ion exchange water softening.
- If hard water or softened hard water is used in a humidifier, it will require more frequent maintenance than a humidifier that uses natural soft water or city water.
- Portable humidifiers are standalone units that are placed in the space that requires humidity control. In most portable humidifiers, the water supply must be replenished manually.
- A dehumidifier is a device that removes excess humidity from the air. The most common type of dehumidifier is very similar to a window air conditioner in design and operation. Air drawn into the dehumidifier passes over the cold evaporator, which causes moisture to condense out of the air. The air then passes over the warm condenser and is reheated before it exits the dehumidifier.
- Other methods of dehumidification use a desiccant to remove unwanted moisture from the air. In these systems, a chemical is exposed to the air and adsorbs moisture. The chemical is then circulated to a different part of the system where it is heated. As the chemical is heated, the moisture it has adsorbed is vaporized and vented to an area outside the conditioned space.
- Humidifiers must be properly sized to provide adequate moisture under all operational conditions. The water supply line should be tapped into a cold water line. The humidifier's drain line should end at least 1″ above a drain to prevent siphoning. Electrical hookup of the humidifier must be in accordance with local electrical codes, and water connections must be done according to local plumbing and building codes.

Copyright Goodheart-Willcox Co., Inc.

Review Questions

Answer the following questions using the information in this chapter.

1. The ratio of the moisture content in the air compared to the maximum amount of moisture that the air can hold at its current temperature is called _____.
   A. hygroscopic level
   B. piezoelectric pressure
   C. relative humidity
   D. vapor saturation level
2. When humidity is too high in a building, the following events may occur, *except* _____.
   A. frequent generation of static electricity
   B. growth of mold, bacteria, and fungus
   C. formation of condensation on cold surfaces
   D. swelling of hygroscopic materials
3. When a humidifier adds moisture to air already heated by a furnace, the temperature of the air _____.
   A. decreases somewhat
   B. increases somewhat
   C. increases a lot
   D. remains steady
4. Being a measure of ventilation rate, _____ refers to the replacing of the entire volume of air in one hour.
   A. air changes per hour (ACH)
   B. available static pressure (ASP)
   C. external static pressure (ESP)
   D. total air balance (TAB)
5. A humidistat is a control device that responds to changes in conditioned space humidity by doing the following tasks, *except* _____.
   A. cycle on and off the attic exhaust fan
   B. modulate dampers and air mixers
   C. turn on or off a dehumidifier
   D. turn on or off a humidifier
6. A traditional electromechanical humidistat senses humidity using a(n) _____.
   A. desiccant
   B. hygroscopic element
   C. piezoelectric crystal
   D. solid-state sensor
7. Humidifying an entire building's conditioned space, central humidifiers are categorized by the following installation types, *except* a(n) _____ humidifier.
   A. bypass
   B. portable
   C. plenum-mounted
   D. under-duct
8. The following humidifiers are categorized as atomizing, *except* _____.
   A. hygroscopic
   B. impeller-type
   C. nozzle-type
   D. piezoelectric (ultrasonic)
9. Using their own heat source (electric heaters), _____ humidifiers add moisture to air by creating steam.
   A. piezoelectric (ultrasonic)
   B. plate
   C. rotating drum
   D. vaporizing
10. Central humidifiers are typically supplied with water from _____.
    A. a building's tapped water lines
    B. bottled water
    C. rain
    D. sewer piping
11. Moisture from air passing through a dehumidifier condenses on its _____.
    A. compressor
    B. condenser
    C. evaporator
    D. humidistat
12. Before condensation spills out of a dehumidifier, its _____ shuts off the compressor, stopping the production and accumulation of moisture.
    A. float switch
    B. frost control element
    C. humidistat
    D. hygroscopic element
13. To prevent or undo the blocking of airflow through a dehumidifier, the _____ shuts off the compressor.
    A. float switch
    B. frost control element
    C. humidistat
    D. hygroscopic element

Copyright Goodheart-Willcox Co., Inc.

14. Special chemicals exposed to conditioned air to adsorb moisture and release it outside of the conditioned space are called _____.
    A. bioaerosols
    B. desiccants
    C. hygroscopic elements
    D. piezoelectric crystals
15. Why must the overflow outlet of a whole house humidifier be installed at least 1″ above an open drain?
    A. The gap allows gasses to escape from the condensate before it enters the sewer system.
    B. The gap prevents drain water from being siphoned back into the potable water supply.
    C. The gap prevents humidifier vibration from stressing the drainpipe.
    D. The gap provides an air break that allows the condensate to drain properly.

Copyright Goodheart-Willcox Co., Inc.

CHAPTER 36 Thermostats

Chapter Outline

36.1 What Is a Thermostat?
- 36.1.1 Thermostat Sensing and Operation
- 36.1.2 Thermostat Features and Options

36.2 Types of Thermostats
- 36.2.1 Heating Thermostats
- 36.2.2 Cooling Thermostats
- 36.2.3 Combination Thermostats
- 36.2.4 Multistage Thermostats

36.3 Line-Voltage Thermostats

36.4 Low-Voltage Thermostats

36.5 Millivolt Thermostats

36.6 Digital and Programmable Thermostats
- 36.6.1 Wireless Thermostats
- 36.6.2 Power-Stealing Thermostats
- 36.6.3 Programmable Thermostats
- 36.6.4 Programming a Thermostat

36.7 Thermostat Installation
- 36.7.1 Thermostat Wiring
- 36.7.2 Free Cooling
- 36.7.3 Installing Wireless Thermostats

36.8 Thermostat Diagnostics
- 36.8.1 Heating System Diagnostics
- 36.8.2 Cooling System Diagnostics
- 36.8.3 Multistage HVAC Systems
- 36.8.4 Low-Voltage Measurements
- 36.8.5 Closing a Troubleshooting Service Call
- 36.8.6 Line-Voltage Thermostats
- 36.8.7 Domestic and Commercial Refrigeration Systems

36.9 Zoned Systems
- 36.9.1 Zoned System Operational Sequence for Heating
- 36.9.2 Zoned System Operational Sequence for Cooling
- 36.9.3 Troubleshooting Zoned Systems

Learning Objectives

Information in this chapter will enable you to:

- Describe how a thermostat can function in different roles in HVACR systems.
- Explain the operating principles of different temperature-reactive components and the switching components used in thermostats.
- List the features and options available in modern thermostats.
- Understand the differences among heating, cooling, combination, and multistage thermostats.
- Understand the purpose and operation of anticipators in thermostats.
- Summarize the operations and applications of line-voltage, low-voltage, and millivolt thermostats.
- Identify and explain the operation of line-voltage thermostats.
- Explain the operation of low-voltage thermostats.
- Understand the use and operation of millivolt thermostats in standing-pilot heating systems.
- Explain the use and operation of wireless and power-stealing thermostats.
- Program and set up a programmable thermostat.
- Identify thermostat wiring terminals by their letters.
- Arrange free cooling through the use of an air-side economizer in a forced-air HVAC system.
- Evaluate a building to determine suitable locations for thermostats and remote sensing devices.
- Diagnose an HVAC system that is not operating properly by using its thermostat.
- Diagnose a high current draw on a step-down transformer used with a low-voltage thermostat.
- Understand the operation and purpose of the various components used in a forced-air zoned system.
- Troubleshoot a forced-air zoned system that is not operating properly.

Technical Terms

barometric damper
bypass damper
combination thermostat
contact point bounce
cooling anticipator
DIP switch
free cooling
freezestat
heat anticipator
heating-cooling thermostat
learning thermostat
line voltage
line-voltage thermostat
low-voltage thermostat
master thermostat
master-slave thermostat design
mercury switch
millivolt thermostat
modulate
multistage thermostat
normally closed damper
normally open damper
ohm out
power-stealing thermostat
power-open/power-closed damper
programmable thermostat
reed switch
slave thermostat
system lag
system overshoot
temperature limit switch
temperature swing
thermostat
Wi-Fi enabled thermostat
zoned system

Review of Key Concepts

Reviewing these concepts from earlier chapters will help you understand new concepts presented in this chapter:

- Series circuits provide current with a single path to follow, whereas parallel circuits allow current to flow along two or more electrical paths. Therefore, in a series circuit, the voltage drop across each electrical load is added together to calculate the total circuit voltage drop. In a parallel circuit, amperage through each electrical load is added to calculate the total circuit current. (Chapter 12)
- According to Ohm's law, voltage equals current times resistance ($V = I \times R$). According to Watt's law, electrical power (watts) equals current times voltage ($P = I \times E$). (Chapter 12)
- Sensing devices, such as bimetal devices, thermistors, and fluid-filled sensing bulbs, react to temperature change and can be incorporated in various control devices. (Chapter 17)
- Solid-state (semiconductor) electronic components are incorporated into many sensing and switching devices in HVACR systems. (Chapter 14)
- Wiring diagrams for HVACR systems can be ladder diagrams, which show sequence of operation, or pictorial diagrams, which show the location and wiring interconnection of devices. (Chapter 16)
- A control system relies on processing feedback based on its set point, control point, and offset. (Chapter 16)
- Airflow through ductwork can be managed manually or automatically using dampers. (Chapter 29)

Introduction

One of the most common control devices in HVACR systems is the thermostat. A ***thermostat*** is a sensing device that reacts to temperature change. Often, a thermostat reacts in order to control a system's starting and stopping when preset temperature conditions are reached. Conditioned space temperature is usually the primary variable that must be measured, but many other temperatures can be measured to monitor system operation and efficiency.

Video

- Wiring a Thermostat

36.1 What Is a Thermostat?

Over time, specific industries, such as HVACR, develop their own jargon. As a result, miscommunication can result when an industry person and a non-industry person speak together. For example, the word *thermostat* does not mean the same thing to everyone. To most non-HVACR people, a thermostat is just the device they operate to change the temperature in their building. To HVACR people, a thermostat may be any kind of switch that automatically responds to a change in temperature, such as a bimetal disc. Many HVACR parts manufacturers list bimetal switches as thermostats. These thermostats are often used as safety devices, such as some roll-out switches in gas furnaces. Be mindful of the word *thermostat* and what that term may mean to customers, clerks, and any person using that word. This chapter will focus on the thermostat as it is understood by the average non-HVACR person: as the control device running a building's heating and cooling system.

Thermostats were traditionally a simple set of contacts that closed or opened on a temperature rise or fall. They required the occupant to manually adjust the set point to maintain a room at the desired temperature.

Modern thermostats can be much more responsive and intuitive. Wi-Fi enabled thermostats, for example, can be operated from anywhere in the world using a smartphone. ***Learning thermostats*** can remember an occupant's desired set point and adapt the HVAC system operation to automatically program On and Off cycles and temperature set points. Some thermostats can ***modulate*** system operation (increase or decrease intensity), in addition to starting and stopping a system. This can result in a significant reduction in energy usage over the life of the thermostat. This chapter describes the basic components of thermostats and reviews specific thermostats in depth.

36.1.1 Thermostat Sensing and Operation

An important part of a thermostat is its sensing element. This component reacts to temperature change. There are several different types:

- Thermistor.
- Bimetal strip.
- Rod and tube.
- Bellows or diaphragm.
- Thermocouple.
- Hydraulic.
- Digital sensor.

Figure 36-1 shows various sensing elements used in different types of thermostats. A bimetal strip reacts to changes in temperature by bending. It is usually wound into a coil, which allows a longer strip to be used in a smaller space. The longer the strip, the greater the movement it will produce.

Contacts and Magnets

Having a long bimetal coil that can produce more movement for each degree of temperature change is designed to reduce ***contact point bounce***, which causes arcing. Using magnets to hold contacts closed also reduces arcing and contact point bounce. Longer bimetal strips also reduce contact "walking" (sliding over each other). Contact walking can also cause arcing.

Some three-wire thermostats have two sets of contacts. One set is for "pull-in" and the other is for "hold-in." Pull-in contacts are energized first. They are usually larger and draw more current than hold-in contacts. The hold-in contacts are then energized to maintain the contacts in a closed position. These contacts maintain stable connections.

Reed Switch

Bimetal strips in thermostats are not always designed to work with a pair of contacts. A bimetal strip can also work in conjunction with a reed switch or a mercury switch. A ***reed switch*** consists of a pair of electrical contacts in a glass tube that are opened and closed by an outside magnet. A magnet connected to the movable end of a bimetal coil opens and closes a reed switch's contacts based on how close it is to the reed switch, **Figure 36-2**.

Mercury Switch

The movable end of a coiled bimetal strip may hold a mercury switch. A ***mercury switch*** consists of a sealed tube containing a small puddle of mercury and two to four contacts made of the ends of wires that run outside the tube, **Figure 36-3**.

Since a mercury switch opens and closes based on how far it is turned or tilted, it may also be called a *tilt switch*. Since the tube is enclosed and the mercury moves quickly from end to end when tilted, electrical arcing does not occur.

Thinking Green

Proper Mercury Thermostat Disposal

Older thermostats used mercury as a switching element. Mercury is a toxic substance. Prolonged exposure may cause severe health effects. It is also harmful to the environment. Due to its health risk and harm to the environment, the use of mercury thermostats is being phased out and banned in some nations. Mercury

Copyright Goodheart-Willcox Co., Inc.

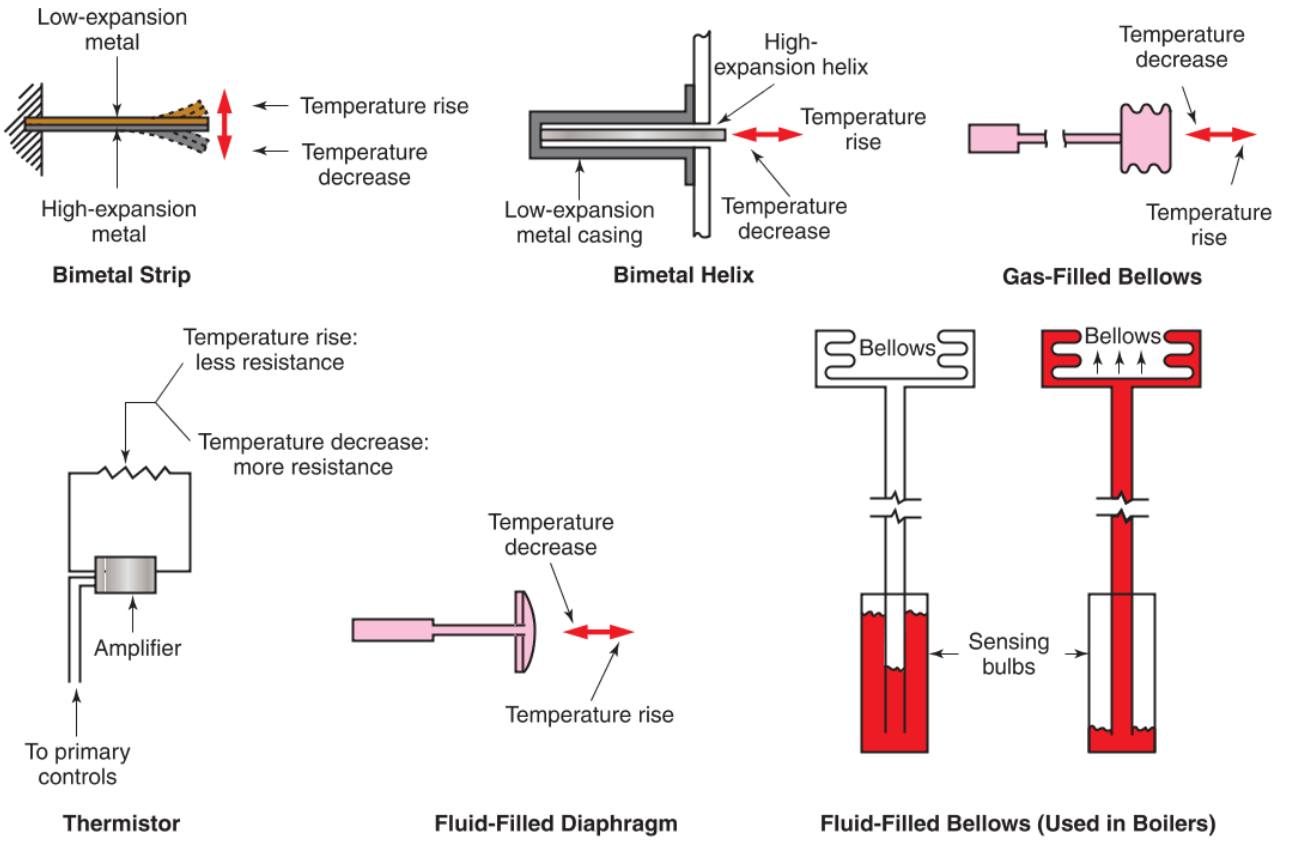

Goodheart-Willcox Publisher

Figure 36-1. Basic types of thermostat sensing elements.

is a hazardous waste. Proper disposal of mercury thermostats is required by law. Mercury should only be sent to an authorized recycler, **Figure 36-4**. The Thermostat Recycling Corporation is an industry-funded, nonprofit organization that offers recycling services to HVACR contractors. Many states and municipalities hold mercury and hazardous material recycling and collection programs. Check with your local town hall for additional information on local programs. Additional information about proper mercury handling and disposal procedures can be found at the Environmental Protection Agency website.

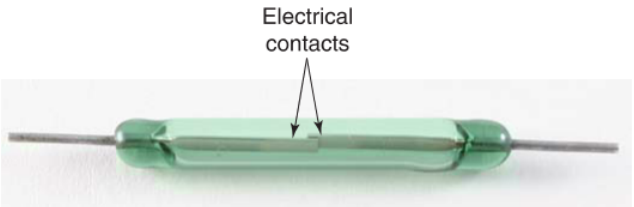

Goodheart-Willcox Publisher

Figure 36-2. A reed switch may be used in a thermostat with a bimetal coil and magnet.

A mercury switch's sealed glass tube prevents dust, lint, and oxygen from wearing and corroding the contacts. As the bimetal coil warms, it expands, which tilts the mercury tube. Once it turns far enough, mercury slides from one end of the tube to the other end. At one or both ends, the mercury puddle flows to complete the circuit between

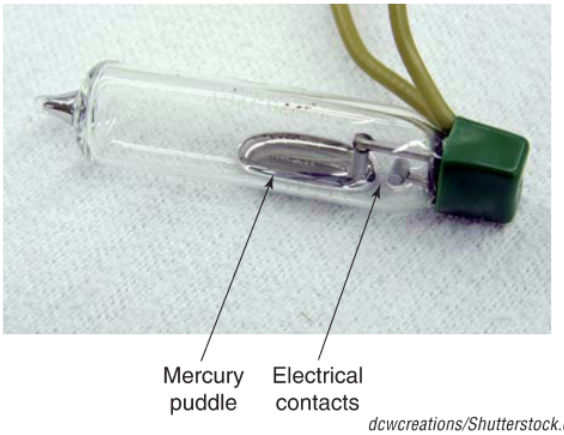

dcwcreations/Shutterstock.com

Figure 36-3. The electrical contacts of this mercury switch are positioned on only one end of the bulb.

Copyright Goodheart-Willcox Co., Inc.

Thermostat Recycling Corporation

Figure 36-4. Take old mercury thermostats to an authorized recycler to ensure they are properly handled.

the wires. Mercury switches were used extensively until the 1990s. They are still found in many older thermostats in residential and commercial buildings.

Caution

Mercury Exposure

Mercury is an extremely hazardous material and must be disposed of properly in accordance with local and federal guidelines. If a mercury spill occurs, do not touch it. Call local hazardous material (HAZMAT) disposal authority. Persons exposed to mercury should seek medical help immediately.

As a coiled bimetal strip reacts to heat by expanding or contracting, it tilts the mercury switch. The puddle of mercury always flows to the lowest point in the glass tube. If the mercury puddle is touching any two or more contacts, it will allow current to flow through the wires. When a bimetal coil expands or contracts in the other direction, it will tilt the glass tube, and the mercury puddle will flow away from those contacts, opening the circuit and stopping the current, **Figure 36-5**.

Pro Tip

Leveling a Thermostat with a Mercury Switch

Be aware of how important angle and tilt is to mercury switch operation. If a thermostat with a mercury switch is mounted at an angle, its set point calibration can be off. On every service call, a technician should make sure to check that a thermostat is mounted level, as this will affect the temperature at which the mercury flows from one end of the tube to the other.

Figure 36-6 shows a mercury switch thermostat wiring diagram for a hot water heating zone valve. When connections #5 and #4 are closed, the motorized zone valve opens. When the thermostat's bimetallic strip tilts the mercury tube the other direction, connections #5 and #6 close. This closes the motorized zone valve.

Due to the hazardous nature of mercury, many thermostats use other sensing elements to monitor temperature. Electronic thermostats use a small thermistor to sense room air temperature. There are no moving parts in an electronic thermostat. A thermistor changes its electrical resistance in response to temperature change.

Safety Note

Handling Mercury Spills

In the event of a mercury spill, immediately evacuate the area. Mercury spills may release mercury vapor into the surrounding area. Stay out of the exposed area for at least 15 minutes. Ventilate the area and shut off HVAC equipment and open windows. Follow these guidelines:

- Never touch mercury.
- Never vacuum up mercury. Doing so would spread it through the air.
- Never wash mercury down the drain.
- If you get any mercury on your clothing or skin, immediately remove contaminated clothing and wash all contaminated skin areas with soap and cold water. Seek medical attention.
- Contact a local hazardous material disposal agency for cleanup and disposal instructions.

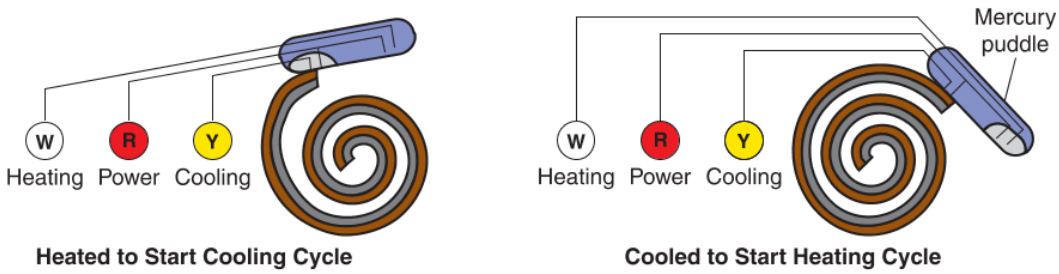

Goodheart-Willcox Publisher

Figure 36-5. When a bimetal coil tilts the mercury switch within a certain range of angles, the mercury puddle will flow to and remain in contact with the wire contacts, allowing current to flow.

Copyright Goodheart-Willcox Co., Inc.

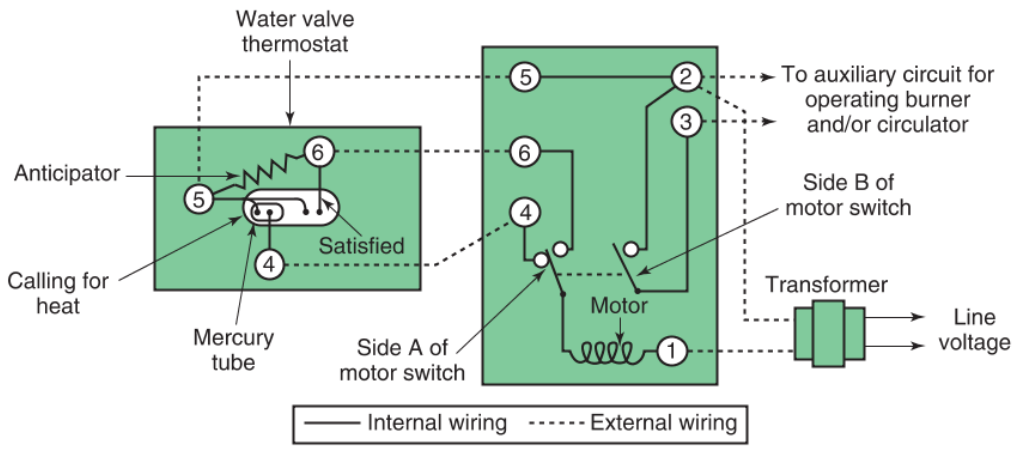

Goodheart-Willcox Publisher

Figure 36-6. The single-pole, double-throw mercury switch in this thermostat opens and closes a motorized zone valve in a hydronic, steam heating, or chilled-water cooling system.

36.1.2 Thermostat Features and Options

When selecting a thermostat for a given application, be aware of all the available features and options. Several to review include the following:

Power source:

- Low-voltage: 24 Vac.
- Power-stealing.
- Battery.
- Millivolt—from heat applied to a thermocouple device.
- Line voltage: hardwired into the building service at 120 V, 120/240 V, 208 V, or 240 V.

Temperature-sensing device:

- Thermistor.
- Thermocouple.
- Bimetal coil.

Switching:

- Solid-state.
- Reed (magnetic) switch.
- Diaphragm switch.
- Mercury switch.
- Bellows switch.
- Contacts with magnets.

Contact points:

- SPST (single-pole, single-throw) two-wire.
- SPDT (single-pole, double-throw) three-wire.

Changeover (how the system switches between heating and cooling modes):

- Manual—usually has a three-position selector switch: Heat, Off, and Cool.
- Automatic—occurs whenever the set point temperatures are sensed.

Programming options:

- Learning.
- Nonprogrammable.
- Weekdays and weekend.
- 7-day.
- Vacation/away settings.

Display:

- Touchscreen.
- Smartphone.
- LCD.

Service reminders:

- None.
- Air filter change.
- Air cleaner.
- Humidifier water pad change.
- UV lightbulb change.

Communication interface:

- Wi-Fi.
- Ethernet (hard-wired).
- Internet accessible.
- Home automation system interface.

Copyright Goodheart-Willcox Co., Inc.

Special features:

- Talking thermostat.
- Easy-to-read display.

Temperature display:

- Indoor.
- Outdoor.
- Multiple (in different set point zones).

36.2 Types of Thermostats

There are many types of thermostats that control heating and cooling systems. The two basic ones are heating thermostats and cooling thermostats. Often these are combined into one unit called a ***heating-cooling thermostat*** or a *combination thermostat*. Some heating-cooling thermostats change from one mode of operation to another automatically, while others must be switched manually.

36.2.1 Heating Thermostats

This section introduces the basic operation of a heating thermostat. A residential heating thermostat typically controls a 24 Vac or 120 Vac circuit. However, there are also some heating thermostats that control millivolt circuits.

Heating thermostats usually operate on a 0.5°F to 2°F (0.3°C to 1°C) differential or smaller. This allows close temperature control. Older thermostats use a bimetal strip as the temperature-sensing element instead of a thermistor. A small magnet connected on or near the contacts is often used to produce snap action between the contact points. The differential is usually established by moving this small magnet closer to or farther from the bimetal strip. Moving the magnet closer reduces the differential. Moving the magnet farther away increases the differential. A range adjustment is usually a direct force on the bimetal. Thermistors use an electric resistance element for temperature control. It is possible to obtain differentials of 0.01°F using thermistors for more accurate control.

Some thermostats are hydraulically operated. **Figure 36-7** shows a diaphragm mechanism. The diaphragm moves as a liquid expands and contracts. The dial adjusts the setting and the small magnet produces snap action in the thermostat. Hydraulic thermostats are primarily used in industrial applications where having wiring in an enclosed area may be a safety issue due to explosive fumes, such as in manufacturing processes.

Thermostats are rated by the voltage they carry. They are also rated by the controls to which they are electrically connected. These controls open the circuit when the temperature rises. They complete the circuit when the temperature falls.

One type of 24 V thermostat is a two-wire 24 V thermostat. It controls the 24 V furnace devices directly. **Figure 36-8** shows a wiring circuit for a control using a mercury switch. The circuit is designed for forced-air heating.

Another type of low-voltage thermostat has three wires connected to it. The wires are connected when the thermostat's sensing element reacts to a temperature drop. Once these wires are connected, they close a holding circuit. The wires will open the circuit when the thermostat's sensing element reacts to a rise of temperature. This type of thermostat must be used with a relay. The relay opens and closes the 120 V circuit for an oil burner, gas burner, or electric heater.

A holding circuit is used in larger applications where a 24 V relay does not have enough strength to hold down the gas relay. The 24 V circuit signals a 120 V circuit, which is capable of providing sufficient current to hold down a large burner relay.

Another type of 24 V thermostat has separate on and off controls. One of these opens the contacts on a rise in temperature to cycle off the heat. The other closes contacts on a drop in temperature to cycle on the heat. This type of thermostat is used on gas burners, oil burners, or electric heaters.

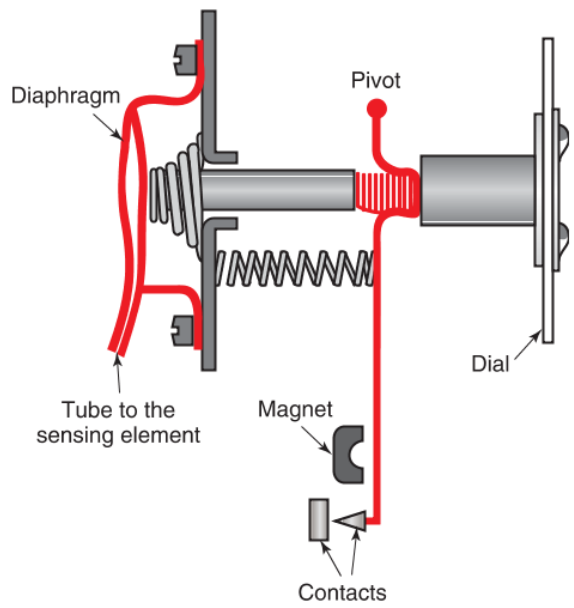

White-Rodgers, Emerson Climate Technologies

Figure 36-7. Diagram shows a side view of a hydraulically operated thermostat.

Copyright Goodheart-Willcox Co., Inc.

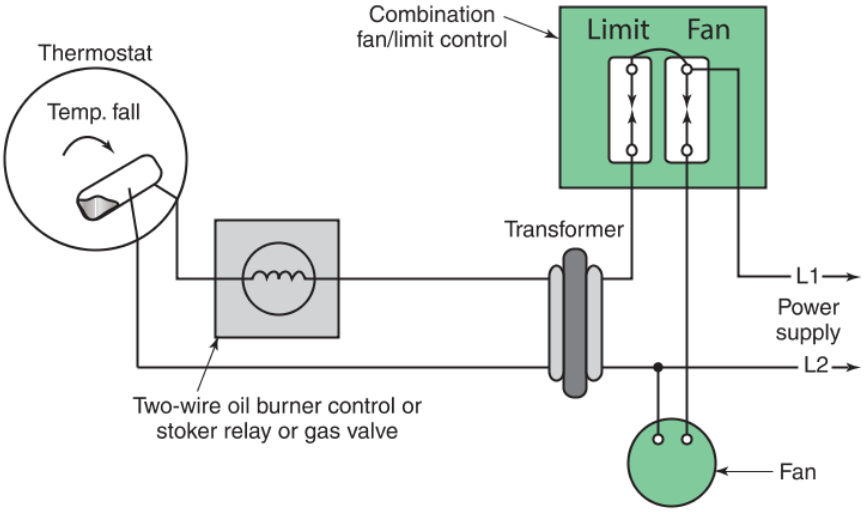

Goodheart-Willcox Publisher

Figure 36-8. Wiring diagram of a circuit for a heating thermostat. The fuel control is in the low-voltage (24 V) circuit, and the blower fan is in the line-voltage (120 V) circuit.

Pro Tip

Open Thermostat Contacts

If contact points remain open when they should be closed, there may be lint or some other substance between the points, resulting in an open circuit. To clean contact points, first shut off power to the thermostat. Then use a piece of clean paper to rub between the contacts. If the contacts are pitted, a fine emery cloth may also be used to clean the terminals.

If a mercury switch remains open when it should be closed, the open circuit may be caused by a mercury tube that is not level. Use a plumb line or level to carefully level the tube.

Heating systems are equipped with safety controls known as ***temperature limit switches***. Most furnaces contain a bonnet temperature limit, which ensures that the furnace plenum does not exceed recommended temperatures. A bonnet temperature limit is also known as a *high-limit*. Large-capacity heating systems use a relay along with low-voltage thermostats to control high-wattage loads. Some technicians prefer low-voltage thermostats with a relay on all electric heating systems. This reduces system overshoot.

System overshoot (heat lag) occurs when a furnace shuts down and the amount of residual heat that has built up is sent through the ductwork and into the conditioned space, raising the temperature above the set point. Some thermostats compensate for heat lag and are programmed to shut down the furnace and blower before the thermostat reaches the set point.

Temperature Swing

Some line-voltage thermostats produce a wide swing of temperatures. Conditioned space temperature will vary too much. ***Temperature swing*** is the total difference of the high and low temperature in a room. This includes values below the cut-in temperature and above the cut-off temperature.

For example, a thermostat is set for 75°F (24°C) with a 6°F (3.3°C) differential. However, the room cools to 70°F (21°C) before any heat is delivered to the room, and then the room warms to 80°F (27°C) before heat flow is stopped. The 10°F (5.6°C) temperature swing may be too large for comfort.

Pro Tip

Thermostat Setting Adjustment

When adjusting a thermostat, avoid heating it with your hands or breathing on the sensing element. If the thermostat is warmed above the room temperature, incorrect thermostat settings may result.

When a thermostat's points close at the beginning of a heating cycle, it takes a certain amount of time for the furnace to heat up and to move this heat to the conditioned space. During this start-up period, the conditioned space temperature may continue to drop, even as much as a few degrees. This temperature drop between the time the heating system turns on and the time heat is delivered to the conditioned space is called ***system lag***. To avoid the discomfort of lower temperatures, a system's cut-in temperature may need to be set about 1°F (0.6°C) above the lowest temperature desired.

Copyright Goodheart-Willcox Co., Inc.

The combination of system lag and system overshoot often results in occupant discomfort and frustration, because of the wide range of temperatures in a conditioned area. For example, a system has a set differential of 6°F (3.3°C), and an occupant sets the heating system for 75°F (24°C). This means that the heating system will turn on at 72°F (22°C) and turn off at 78°F (26°C). However, due to system lag, heat only begins reaching the room when the temperature has dropped to 70°F (21°C). Also, heat only stops warming the room by the time it reaches 80°F (27°C). In one cycle of operation, the temperature swings from 70°F to 80°F (21°C to 27°C), **Figure 36-9**.

This wide temperature swing can be reduced but not completely eliminated. To stop system overshoot, a thermostat would need to shut off the system before the set temperature is reached in the conditioned space. In order to do this, additional heat above room temperature must be produced for the temperature-sensing device to detect in order to switch off the heater early.

Heat Anticipators

Electronic thermostats using a thermistor as the sensing element are simply programmed to provide control as standard heating and cooling anticipators. The system may also have an algorithm or program that learns how long it takes the system to reach the set point temperature and automatically shuts down the unit prior to reaching the set point.

Mechanical thermostats generate heat in the thermostat's electrical circuitry. Often, it is not enough to keep the thermostat temperature higher than the conditioned space temperature. To produce this higher temperature, many thermostats contain a small heating coil. When the thermostat closes its contacts to call for heat, current flows through the coil to produce enough heat to keep the thermostat warmer than the ambient air temperature. These small resistance coils are usually called ***heat anticipators***. **Figure 36-10** shows a heating thermostat wiring schematic diagram with a heat anticipator.

During the heating cycle, a thermostat with a heat anticipator remains about 1°F (0.6°C) warmer than the conditioned space. If the thermostat is set for 74°F (23.3°C), the thermostat will turn off the heater while the room temperature is actually 73°F (22.8°C). Then residual heat from the furnace will continue to flow into the conditioned space, and room temperature will rise to 74°F (23.3°C). By turning off the heating system before this occurs, system overshoot is reduced.

Heat anticipators can be either fixed or adjustable. They are most often used on low-voltage and millivolt thermostats (24 Vac and 750 mV). The anticipator size (current capacity) is related to the current flowing through the thermostat contacts. Current level depends on the electrical loads connected to the thermostat for both millivolt and 24 Vac thermostats, such as a gas valve or relay coil. The current varies between 0.15 A and 1.0 A.

With a fixed anticipator, current through the anticipator equals the control circuit current. An adjustable anticipator is regulated to match the control circuit current. Manufacturer's installation

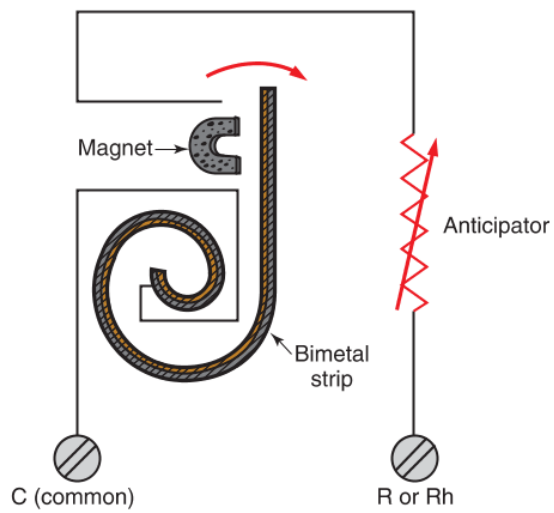

Goodheart-Willcox Publisher

Figure 36-10. This diagram shows a heat anticipator wired in series with the bimetal coil. In this design, the heat anticipator warms the coil when current flows through it, which is only when the heating system is producing heat for the conditioned space.

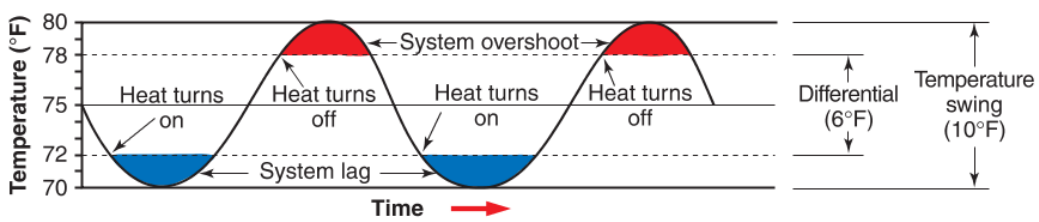

Goodheart-Willcox Publisher

Figure 36-9. Chart showing temperature swing.

Copyright Goodheart-Willcox Co., Inc.

instructions indicate the setting and adjustment process for heat anticipators.

An anticipator with a higher rating than the control circuit current will warm the thermostat more slowly. This higher rated anticipator will produce less heat, because it is designed for a higher current than the control circuit provides. An anticipator with a lower rating than the control circuit will warm the thermostat more quickly. The more residual heat in the heating system, the larger the capacity of the anticipator.

36.2.2 Cooling Thermostats

Comfort cooling thermostats are similar in design to heating thermostats, but they react in the opposite manner. The control contacts open as the room cools and close as the room warms.

Pro Tip

Function on a Rise

In the HVAC industry, the function that a control performs is normally the function that occurs during a rise in the system variables. For instance, a heating system *opens* on a rise in temperature. In other words, a heating control opens its circuit to stop the heater when it senses a rise above the thermostat set point. The opposite happens in a cooling system, which *closes* its circuit on a rise in temperature. Many safety and limit switches open on a rise to stop operation and prevent damage to components.

As with heating thermostats, the most commonly used cooling thermostats are electronic, which use a thermistor to sense room temperature. Although cooling thermostats are available as either 24 Vac or 120 Vac controls, the 24 Vac thermostat is most widely used. Bimetal thermostats usually have a 1°F (0.6°C) differential and have cooling anticipators. These small electric resistance elements are in parallel with the contact points. Cooling anticipators close the bimetal-controlled points just before the room reaches the cut-in temperature, as they are energized when the thermostat has not yet turned on the cooling cycle.

Cooling Anticipators

System lag and system overshoot problems are not limited to heating systems but are also often present in comfort cooling systems. To compensate for system lag, cooling thermostats often include cooling anticipators. A ***cooling anticipator*** is a high-value resistor wired in parallel with the bimetal coil. Both are connected to the common (C) and cooling (Y) terminals in a thermostat, **Figure 36-11**.

A cooling anticipator conducts current during the cooling system's Off cycle to produce heat. This added heat causes the bimetal coil to activate the cooling system when the room temperature is about 1°F (0.6°C) below the cut-in setting. For example, if a thermostat is set to cut in at 78°F (25.6°C), it will actually start the system at 77°F (25.0°C).

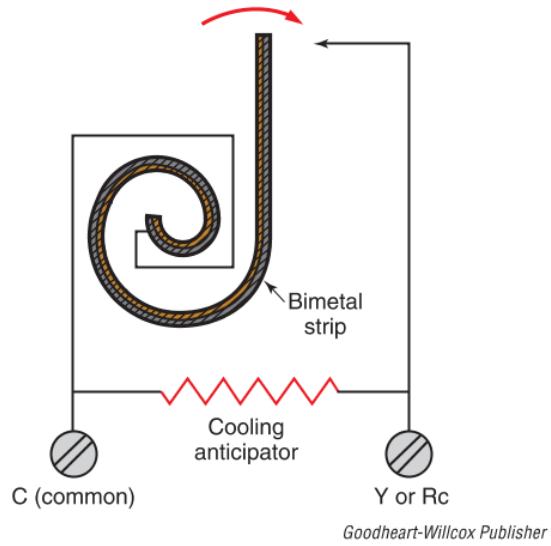

Figure 36-11. Schematic wiring diagram of a cooling thermostat equipped with a cooling anticipator.

Often, cooling systems require a few minutes to begin operating at full capacity. If a cooling system were to begin operating when a conditioned space reaches the cut-in temperature, it could still be a short while before any cooling would occur. During this time, the temperature in the conditioned area would continue to rise. A comfort cooling system with a cooling anticipator can start an air-conditioning system in time for cooling to begin when the cut-in temperature is reached.

During the On cycle, the bimetal coil closes its contact, and nearly all of the current flows through the contacts rather than through the anticipator. Essentially, the bimetal coil contact bypasses the anticipator. As a result, the cooling anticipator provides no heat during the On cycle.

36.2.3 Combination Thermostats

Today, most thermostats are used for operating both heating and cooling systems. Such thermostats are called ***combination thermostats***. **Figure 36-12** shows a simplified wiring diagram for a combination thermostat that includes a bimetal coil, heat anticipator, and cooling anticipator.

Combination thermostats are available for both line-voltage and low-voltage applications. Many combination thermostats use switches to change from

Copyright Goodheart-Willcox Co., Inc.

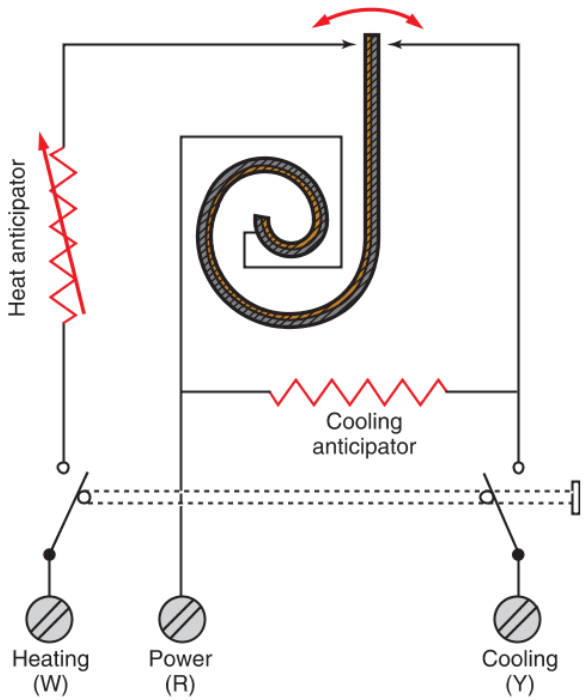

Goodheart-Willcox Publisher

Figure 36-12. Schematic of a bimetal heating-cooling thermostat equipped with both a heat anticipator and a cooling anticipator.

heating to cooling and to select fan operation as continuous or automatic. Some use a dial or slide for setting the temperature. On others, these features are accessed through a touch screen or keypad. Combination thermostats can have either a mechanical or digital display, **Figure 36-13**.

Multiple wires connect to a thermostat. The number of wires depends on the heating and cooling stages and other features that the thermostat is designed to control. A schematic diagram including a combination thermostat is shown in **Figure 36-14**.

Some thermostats include advanced controls, such as controls designed to monitor and regulate humidity, indicate when to replace an air filter, or operate other functions. These controls usually operate on a 24 V circuit.

36.2.4 Multistage Thermostats

A ***multistage thermostat*** is a thermostat that can control a system's heating and cooling capacity through various means, such as modulating compressor and fan operation or varying fuel combustion or electrical power. For electric heat, this may involve energizing more or fewer electric heating elements. For gas or oil heat, this could mean regulating fuel to a burner. For a

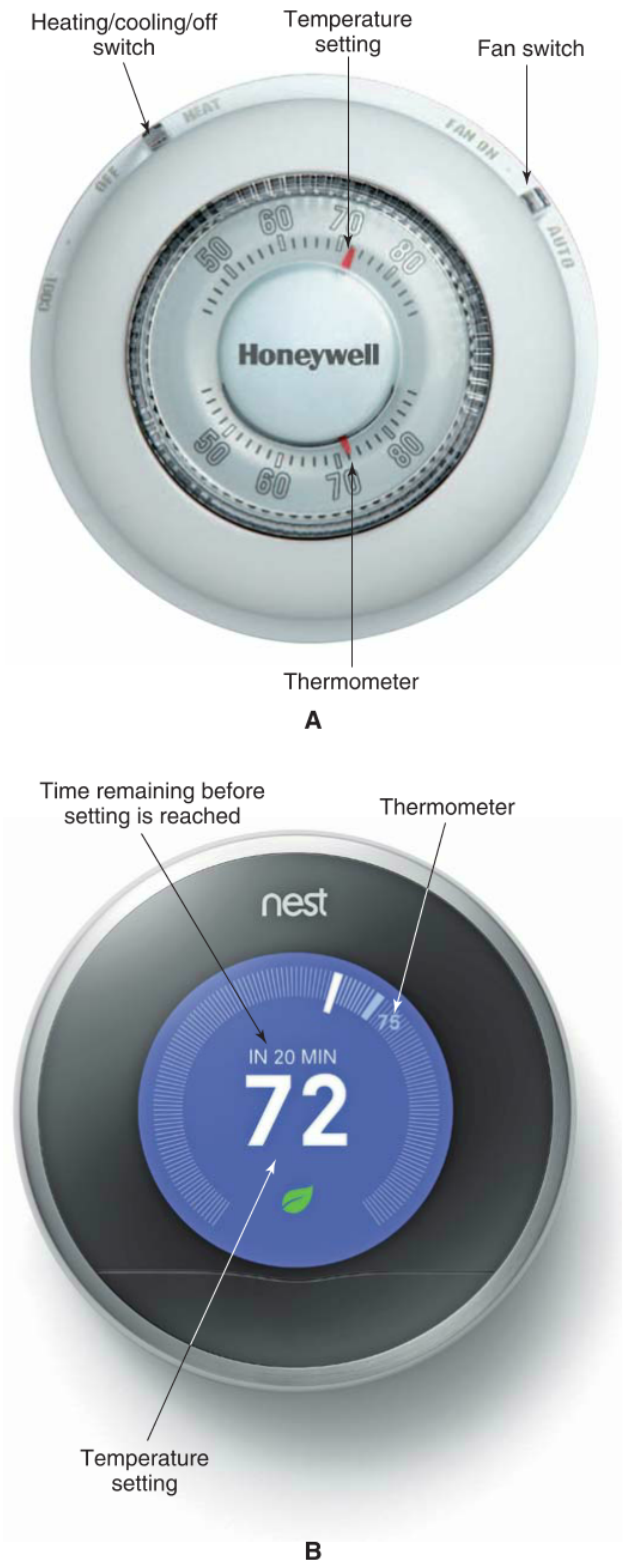

Honeywell, Inc.; Courtesy of Nest Labs, Inc. Copyright © 2012 Dwight Eschliman

Figure 36-13. A—Round thermostat with analog readout. B—Round thermostat with digital readout.

Copyright Goodheart-Willcox Co., Inc.

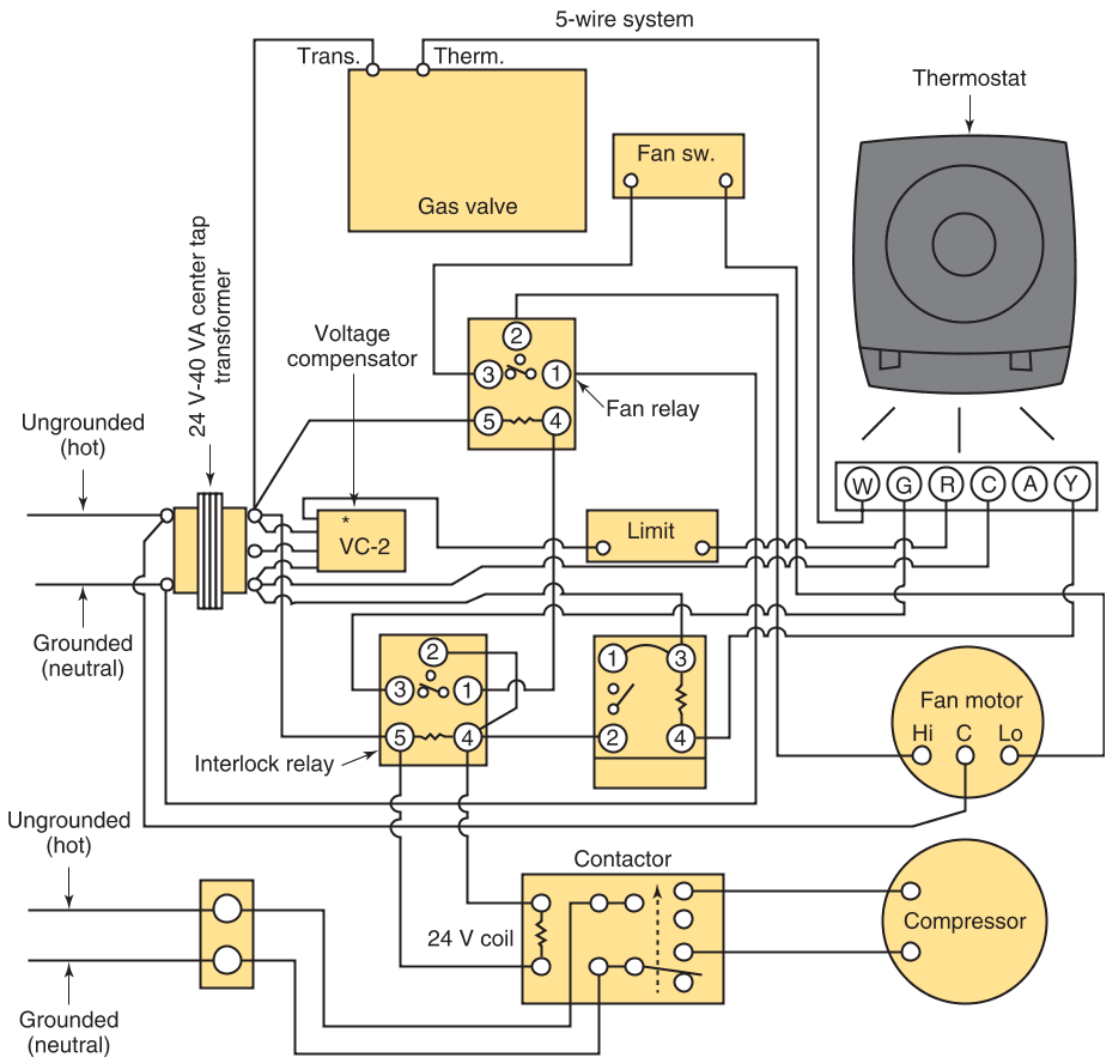

Siebe Environmental Controls, Invensys Climate Controls Americas

Figure 36-14. Electrical wiring diagram for a 24 Vac combination thermostat.

10

heat pump or air conditioner, this could mean governing fan and compressor operation. Multistage thermostats are usually designed for low-voltage operation.

In single-family residences, a multistage thermostat may control different parts of a building's HVAC system. In a gas furnace, a multistage thermostat will often control a two-stage or modulating gas valve that will vary the amount of gas burned and the amount of heat produced. A multistage thermostat will also often vary the speed of the indoor blower based on temperature readings and settings.

In an electric furnace, more or fewer sets of electric heating coils may be energized to produce more or less heat. These operations are used to reduce energy consumption, prolong furnace operation, and maintain a stable average temperature in the conditioned space.

For cooling in a single-family residence, a multistage thermostat may control blower speed and compressor capacity. Some scroll compressors can bypass a small amount of discharge vapor into the suction line to reduce cooling capacity. Other compressors may be able to run at different speeds, which a multistage thermostat would determine.

In large residential or commercial buildings, a single multistage thermostat uses multiple sets of contacts to control multiple condensing units, furnaces, and blowers. This allows sequenced operation for heating or cooling capacity control. Most multistage mechanical thermostats are replaced with electronic thermostats, which offer the advantage of programming different set points and cycles for each unit.

Copyright Goodheart-Willcox Co., Inc.

Many multistage thermostats are recognizable by their terminals used for multiple stages of operation. Standard heating and cooling systems only have one stage of operation. Terminal W controls heating operation, and terminal Y controls cooling operation. When a thermostat has more than one W terminal (W1, W2, etc.), it can control multiple stages of heating operation. If a thermostat has more than one Y terminal (Y1, Y2, etc.), it can control multiple stages of cooling operation, **Figure 36-15**.

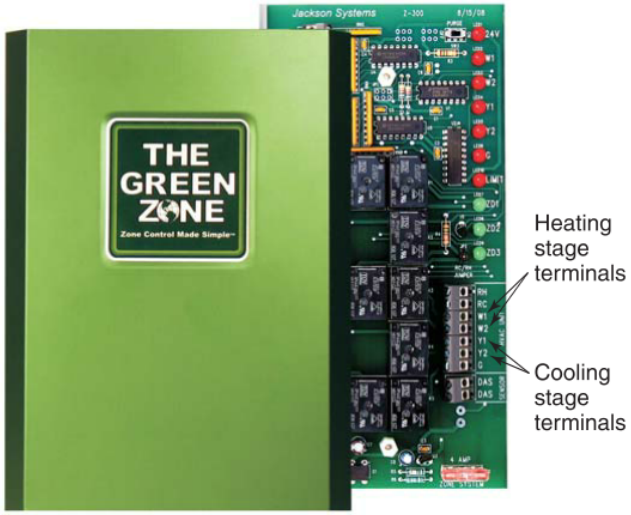

Jackson Systems, LLC

Figure 36-15. This zone control panel is capable of communicating with multistage thermostats for heating and cooling operation.

36.3 Line-Voltage Thermostats

In industry, ***line voltage*** is typically considered either 120 Vac or 240 Vac. A ***line-voltage thermostat*** is a thermostat that typically operates using either 120 Vac or 240 Vac. It may be designed to control current as high as 22 A.

Line-voltage thermostats are primarily used for electric baseboard resistance heaters and do not require the use of a step-down transformer to a low-voltage thermostat. They offer the advantage of being wired directly to the heater. Line-voltage thermostats are also used in commercial applications to control infrared heaters that operate on 240 V.

A line-voltage thermostat may be wall-mount or mounted directly to an electric heating unit, **Figure 36-16**. Thermostats mounted on baseboard heaters are usually encased in attractive covers. They may have a calibrated dial mounted on an adjustment knob or digital controls, **Figure 36-17**.

Cadet Manufacturing Co.

Figure 36-16. This analog line-voltage thermostat uses a bimetal switch to turn on and off electric resistance heating units.

36.4 Low-Voltage Thermostats

A ***low-voltage thermostat*** is a thermostat that typically operates at 24 Vac supplied by a step-down transformer. A heating and cooling system uses a 120 Vac to 24 Vac step-down transformer to power a low-voltage thermostat's control circuit board. This includes the display showing a variety of relevant information to occupants, **Figure 36-18**.

Low-voltage thermostats often control relays and contactors. These relays and contactors are often used to switch line-voltage circuits on and off. Low-voltage thermostats carry only a small amount of electrical power. This is an advantage, as these lower current levels are safer, having lower shock potential than line voltage, **Figure 36-19**.

Transformers are usually rated by their primary and secondary voltages, as well as the volt-ampere (VA) rating of their design. For example, a step-down transformer may come with a rating of 120 V to 24 V and a VA rating of 40. This means that the primary side

Copyright Goodheart-Willcox Co., Inc.

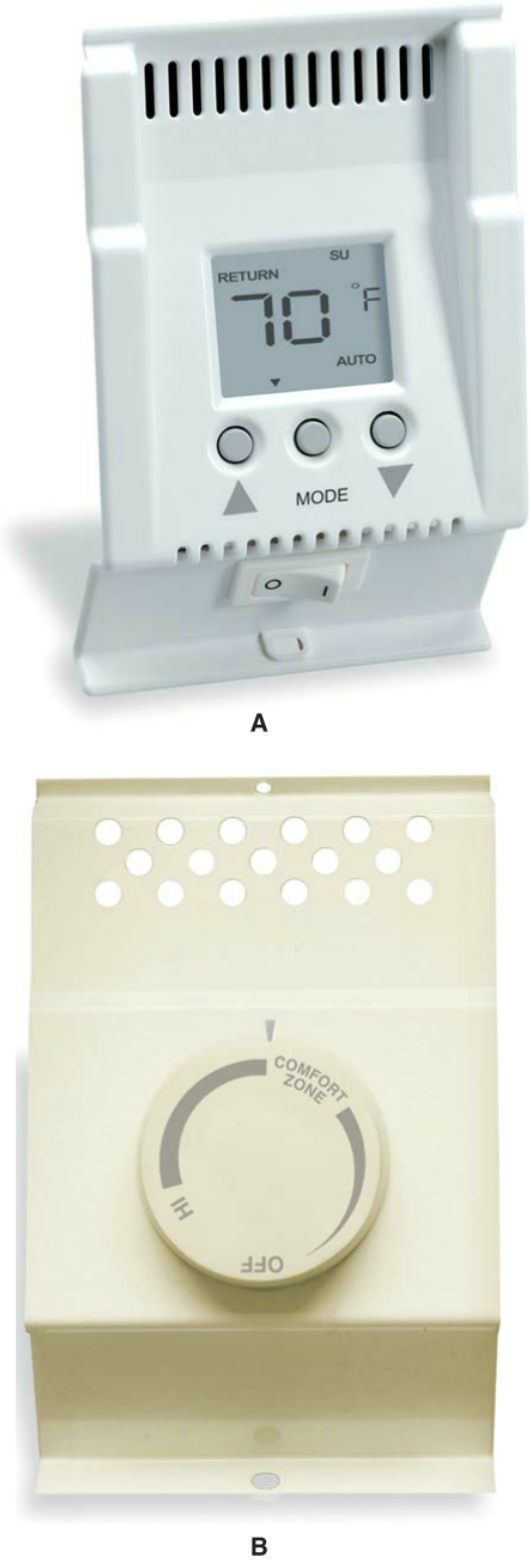

Cadet Manufacturing Co.

Figure 36-17. Electric heat baseboard-mounted thermostats. A—Electronic programmable thermostat controlling line voltage. B—Analog dial thermostat controlling line voltage.

Insteon

Figure 36-18. A low-voltage thermostat's display showing temperature measurements, temperature set point, humidity, time, and other information.

York International Corp.

Figure 36-19. Low-voltage thermostat wiring going to an air conditioner's condensing unit uses relays to switch the higher current loads of the compressor and condenser fan.

10

Copyright Goodheart-Willcox Co., Inc.

input voltage is 120 V, the secondary side output voltage is 24 V, and the current rating on the secondary side of the transformer is 1.67 A (40 VA ÷ 24 V = 1.67 A).

Be aware of the current load of a circuit in which a transformer is being placed. Drawing too much current on its secondary can cause a transformer to fail. When possible, include a properly sized fuse on the secondary side of a transformer circuit. The fuse should be rated high enough that all loads can operate without a problem. However, the fuse should be rated low enough to protect the transformer from a high current draw that could burn out the windings, **Figure 36-20**.

Pro Tip

Overloading 24 V Transformers

Most 24 V transformers will produce between 27 V and 28 V when properly placed into a circuit. If the technician measures a voltage of 24 V or lower, it is time to check the transformer and the loads on the circuit for excessive current draw or failure.

Caution

Low-Voltage and Line-Voltage Devices

Low-voltage thermostats will be damaged if connected to line-voltage (120 V or 240 V) circuits. Be careful to check an electrical device's voltage and current before installing it and energizing the circuit.

Low-voltage thermostats normally use 18 AWG wire for distances up to 50′ (15 m). For distances over 50′, 16 AWG wire is typical. Thermostats require multiple wire connections. Always review system and thermostat specifications before buying thermostat cable for installation to ensure it has enough conductors.

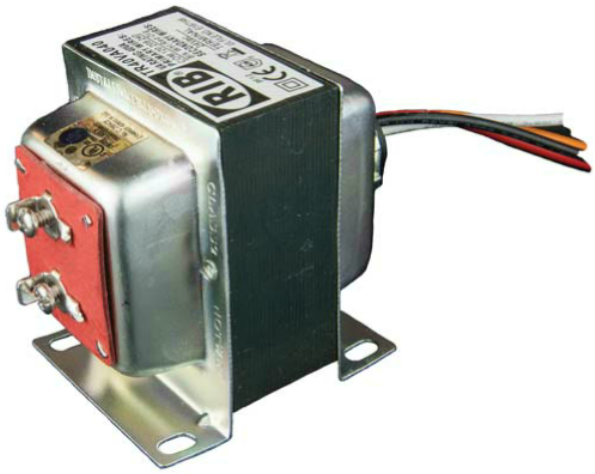

Jackson Systems, LLC

Figure 36-20. Many step-down transformers used with HVAC systems are rated 40 VA. These can safely provide 1.67 A at 24 Vac.

Pro Tip

Thermostat Wiring Diagrams

Because of the variety of systems and optional controls, not all manufacturers follow the same wiring color code or lettering system. Be sure to connect wires as indicated in the wiring diagrams provided by the manufacturer. When installing a replacement thermostat, always mark the existing thermostat's wires according to their terminal connection before disconnecting any wires.

Code Alert

Class 2 Circuits

Low-voltage thermostats control the power to low-voltage controls of Class 2 (power) circuits as defined by the National Electrical Code (NEC). Class 2 circuits are generally used for remote control or signaling circuits. These are power-limited circuits, which means there is less chance of electric shock or fire initiation. Some municipalities require that a licensed electrician complete the wiring for these circuits. For more information on Class 2 circuits, see Article 725 of the NEC.

The thermostat mounting usually requires other parts. The subbase—the part to which the thermostat is attached—contains the wiring terminals. Sometimes it holds other parts, such as switches, indicator lamps, and batteries. Beneath the subbase may be a wall plate. This is the part attached to an outlet box or wall. **Figure 36-21** shows a simple wiring diagram for a low-voltage thermostat.

Most low-voltage thermostats sense temperature using a thermistor. A thermistor is a device that changes its electrical resistance based on temperature.

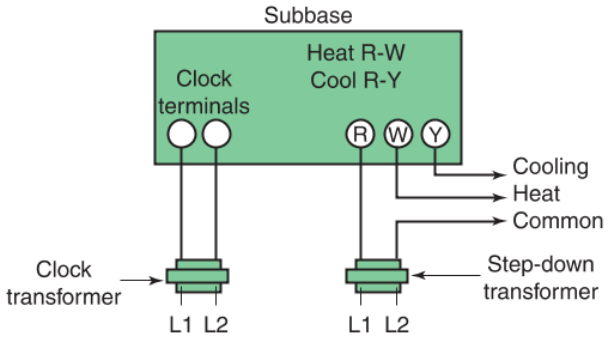

Honeywell Inc.

Figure 36-21. Low-voltage thermostat wiring diagram. Note that not all thermostats have clock terminals, and not all require a clock transformer.

Copyright Goodheart-Willcox Co., Inc.

These thermostats have numerous advantages over older bimetal coil and mercury switch thermostats:

- Environmentally friendly—a thermistor replaces a hazardous mercury switch.
- Programmable—digital input allows easy programming by the homeowners.
- Durable—few or no moving parts or contacts to sustain wear.
- Expandable—programming may allow additional stages of operation and sensors.
- User friendly—touch screen models allow easy operation and access to information.
- Remote access—wireless interface via the web and smart device applications.
- Easily serviced—trouble codes may be accessed from user screen or USB port.

36.5 Millivolt Thermostats

A ***millivolt thermostat*** is a heating thermostat that operates a small solenoid valve powered by a very small direct current (dc) voltage produced by a thermocouple device. Millivolt thermostats require no external power source. The thermocouple is located near a gas pilot light, which provides the heat required to generate enough electrical power for operation, **Figure 36-22**.

Millivolt thermostats were common for many years but have generally been phased out. These thermostats depend on a standing pilot light, but many gas furnaces and other gas-fired appliances no longer have a standing pilot light. Therefore, millivolt thermostats cannot be used to control such systems. For safety and environmental reasons, many areas no longer permit the use of a standing pilot light. Many low-voltage electronic thermostats are capable of operating millivolt systems and can be used as replacements.

Millivolt thermostats cannot be used to operate cooling systems. They are only used on systems with a standing-pilot ignition. These are mainly found on older heating systems, stoves, fireplaces, and water heaters. Millivolt thermostat systems are series circuits that usually have only two wires. Two wires originate from the thermocouple device. The circuit loops in series through a bimetal coil-operated mercury switch, a solenoid valve, and back to the thermocouple device, **Figure 36-23**.

When a millivolt thermostat's switch closes, current from the thermocouple passes through the solenoid valve. The solenoid valve then opens to supply fuel to the burner. When the desired temperature is reached, the thermostat's switch opens. This stops current to the solenoid, which closes the valve and stops the main gas supply. After the main burner is turned off, the small pilot gas supply continues to keep the pilot lit, which keeps voltage ready for the next On cycle.

White-Rodgers Division, Emerson Climate Technologies

Figure 36-22. This thermocouple senses the heat of a pilot light and generates enough electrical power to operate a solenoid valve controlled by a millivolt thermostat.

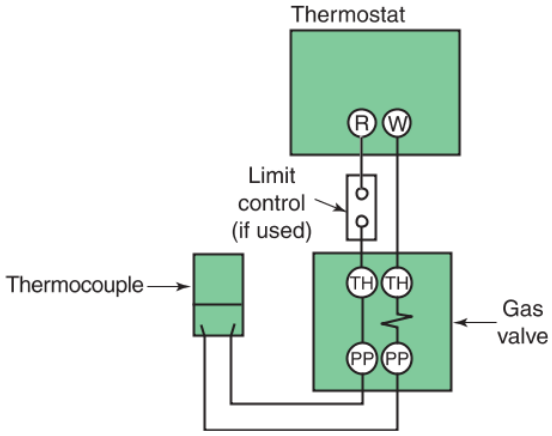

Honeywell Inc.

Figure 36-23. Millivolt thermostat wiring diagram.

36.6 Digital and Programmable Thermostats

Advances in electronic circuitry and controls have revolutionized the thermostat and its capabilities. Electronic thermostats use the same basic operating principles as earlier models. However, the various

Copyright Goodheart-Willcox Co., Inc.

functions are all accomplished with electronic components, such as transistors, solid-state relays, integrated circuit chips, and microprocessors. The versatility of electronics allows a thermostat to control and monitor numerous circuits through its ability to communicate with compatible transducers and sensors. These functions include sensing, switching, timing, and staging.

36.6.1 Wireless Thermostats

Wireless thermostats electronically activate a responder on the furnace or air conditioner. This can be done up to a distance of about 120′ (36.5 m). Wireless thermostats may also include remote wireless sensors, such as outside temperature sensors, air filter sensors, and humidity sensors. Each sensor sends a signal to the thermostat that is programmed to operate the heating and cooling unit and various zone valves or dampers throughout a building.

A wireless thermostat may be moved from room to room. It responds to the temperature of whatever room it is in. Since it is an electronic battery-powered unit, the thermostat has no moving parts. It can have an accurate adjustable differential from 0°F to about 5°F (0°C to about 3°C). Many have a range of 45°F to 90°F (7°C to 32°C).

An advantage of a wireless thermostat is that it may interface via Wi-Fi to mobile devices, such as a tablet PC, smartphone, or laptop. This provides the homeowner with the ability to change the set temperature from anywhere. Remote control also allows the user the ability to precondition the home. For example, the user may raise or lower the home's temperature while still at work so that the home is heated or cooled prior to the owner's arrival. Many HVAC manufacturers offer a mobile application that may be downloaded to a smartphone or mobile device to control the HVAC system remotely, **Figure 36-24**.

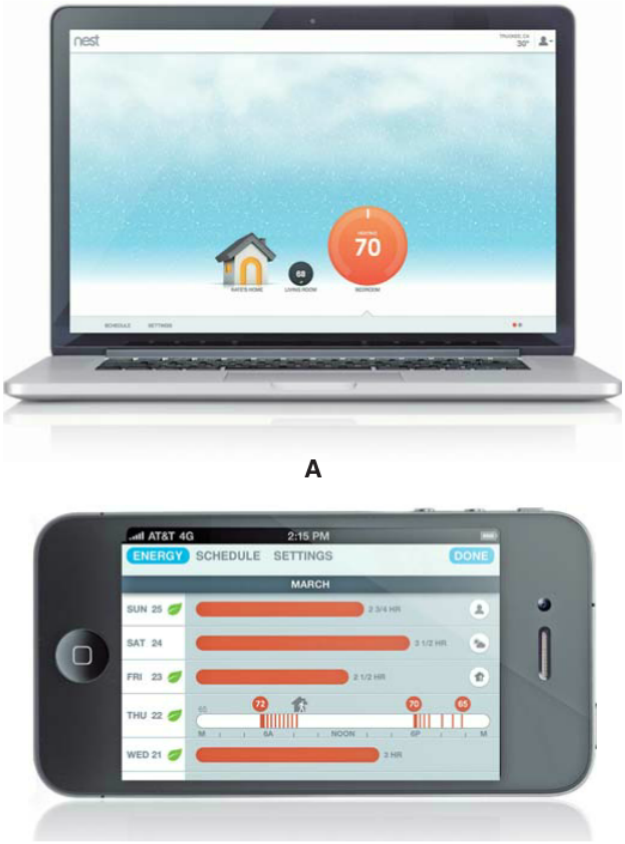

Courtesy of Nest Labs, Inc. Copyright © 2012 Dwight Eschliman

Figure 36-24. Wireless thermostats allow for easy adjustment and monitoring. A—Controlling a thermostat remotely through a laptop. B—Reviewing HVAC system energy usage over time using a smartphone.

36.6.2 Power-Stealing Thermostats

Power-stealing thermostats are electronic thermostats that draw a small amount of power from the low-voltage side of the HVAC system control to operate the thermostat electronics. The current draw is in the milliamps (mA) range. Power-stealing thermostats are very efficient and do not require a separate power source to operate. **Figure 36-25** shows one type of power-stealing thermostat display.

A power-stealing thermostat "steals" power for the control board by tapping into the fan, cooling, or heating terminals. When the heating or cooling is operating, a small amount of current flows into the thermostat to recharge its internal battery.

Control4 Corporation

Figure 36-25. A power-stealing thermostat with a touch screen interface. Note this unit is a whole home management system.

Copyright Goodheart-Willcox Co., Inc.

Caution

Power-Stealing Thermostat Compatibility

Power-stealing thermostats may not be compatible with some HVAC system circuit boards. The small voltage draws required by the thermostat may result in activation of the relay from which the thermostat is attempting to draw power. This may result in HVAC control board failures or relay issues. To prevent this condition, it may be necessary to install a small bypass resistor. The bypass resistor is placed between the power-stealing thermostat leg and common. The resistor prevents overcurrent conditions to the control board. **Figure 36-26** illustrates a power-stealing thermostat wiring diagram with a bypass (bleed) resistor installed. Also, some zone valves used in hot water heating systems require a small bleed resistor to be installed across two pins on the zone valve.

36.6.3 Programmable Thermostats

A ***programmable thermostat*** contains a microprocessor that functions as a clock and allows users to select different indoor climate conditions for different blocks of time. The precision and responsiveness of solid-state controls result in the best operation for high-efficiency operation. These same controls are often used to detect, monitor, and display for the user the system conditions. The conditions are indicated by instruments, lights, and recorders. Electronic components of a solid-state thermostat usually include a thermistor (temperature sensor) and an integrated circuit board.

Many heating-cooling systems use a programmable thermostat governed by a clock. It changes the temperature range during the night and returns the range to normal during the day. Many also provide seven-day settings, which enable different temperature settings for weekdays and weekends. This type of control can provide a lower operational cost by operating an HVAC system only when needed and operating less when occupants are away. **Figure 36-27** shows a single day's schedule as governed by a thermostat's clock.

Unlike line-voltage or mercury switch thermostats, many electronic thermostats do not have heat anticipators, because they often use remote sensing units. A remote sensing unit includes a temperature sensor that is at the end of a cable run from the thermostat to within a few feet from a supply register, so it will more accurately sense the actual room temperature.

Through the use of electronic circuitry rather than mechanical controls, a greater variety of control options and features are available in a thermostat of the same size as an older mechanical thermostat. A typical electronic thermostat can perform the following functions:

- Fully programmable temperature settings. Various temperatures can be programmed to achieve maximum comfort throughout the day. These settings can also be varied for each day of the week depending on occupancy, allowing high levels of efficiency.

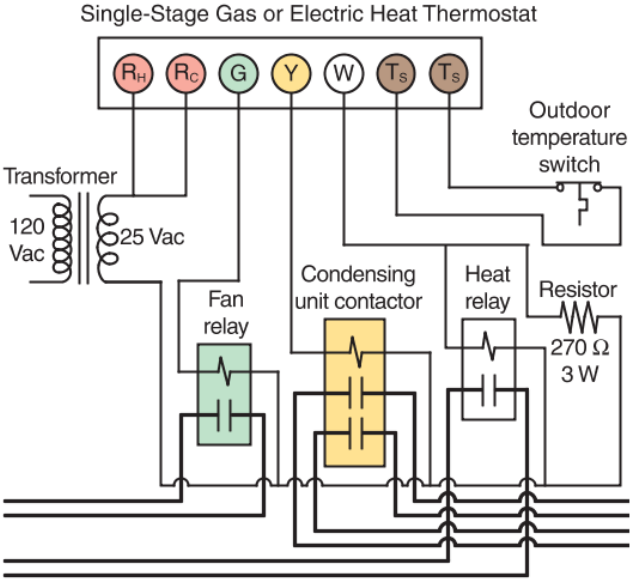

Goodheart-Willcox Publisher

Figure 36-26. Single-stage combination thermostat wiring diagram with 270 Ω 3 W bypass resistor in the circuit for power-stealing setup.

Venstar

Figure 36-27. This programmable thermostat's display is showing the time and temperatures for system operation for Fridays.

Copyright Goodheart-Willcox Co., Inc.

- Multistage and combination control. A single device can control various stages of heating and cooling. For heat pump applications, programmable thermostats designed specifically for heat pumps should be used, **Figure 36-28**.
- Override control. This feature overrides the thermostat's normal programming in order to maintain a preset temperature condition. An example would be a vacation setting. A single temperature might be desired for those periods of time when no one is home.
- Digital display using a back-lit LCD screen. Room temperature, desired temperature, time, and date are displayed at the push of a button.
- Battery backup. Most electronic thermostats are low-voltage thermostats, and most models have a battery backup. The battery backup prevents loss of an entire program in case of a power failure.
- USB or wireless interface. Some thermostats can be programmed and monitored using a USB cable or wireless connection from a laptop or handheld device.

Additional features that can be found on some models include the following:

- Maintenance alerting. The unit can automatically keep track of the number of days that the air filters, humidifiers, and other components are in use. Then, it will automatically signal with a light or tone when maintenance is required, **Figure 36-29**.
- Outside temperature anticipator. Some electronic thermostats sense outside temperature and include this value in calculations to determine the length of a heating and cooling system warm-up or cool-down time. They adjust the operating cycles accordingly. Outside temperature can often be digitally displayed.
- Security protection. The thermostat requires a security code before allowing the user to modify settings. This feature is sometimes used in commercial settings in which the thermostat is in a public location.

Venstar

Figure 36-28. A programmer must input how many stages of cooling and heating operation will be used with the system connected to a thermostat.

Venstar

Figure 36-29. This thermostat allows its user to select the frequency of equipment service reminders.

Programmable thermostats vary somewhat with each manufacturer. Some are available as a control unit with one or more separate temperature sensing units. The sensors can be mounted in a conditioned space, and the control unit can be mounted elsewhere, such as a manager's office, **Figure 36-30**.

Programmable thermostats, due to their precision components, offer exact temperature control. Usually, temperature can be controlled within 1°F (0.6°C) of the set temperature. Programmable thermostats offer significant energy savings without reducing overall comfort. This is accomplished through simple preprogrammed temperature settings. Once the unit has been programmed, very little effort is required from the owner.

36.6.4 Programming a Thermostat

A programmable thermostat allows an occupant to tailor indoor comfort to suit individual preference and schedule. Often, they are used to change the temperature settings for night and reset them for different periods through the day. Most units include preset programs, but allow the operator to modify the program to desired temperatures for different times and days of the week.

Copyright Goodheart-Willcox Co., Inc.

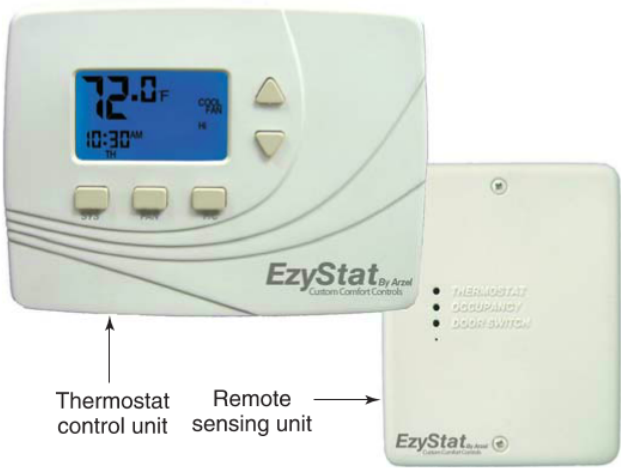

Arzel Zoning Technology, Inc.

Figure 36-30. An electronic thermostat with a separate control and sensing unit.

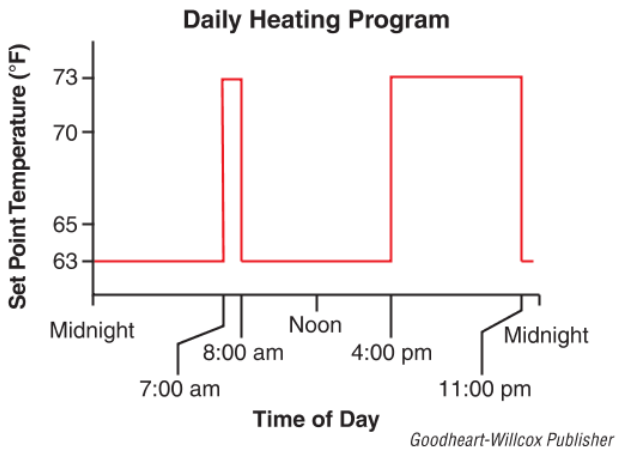

Goodheart-Willcox Publisher

Figure 36-31. A typical programmable thermostat control program for a heating day. When occupants are present and awake in the morning and evening, the thermostat maintains a 73°F (22.7°C) set point. When the occupants are away during the day or asleep at night, the thermostat maintains a 63°F (17.2°C) set point.

Most thermostats permit programming on three basic levels:

- Time of day.
- Day of the week.
- Heating or cooling.

Programming a thermostat involves adjusting the on-off schedule and temperature of a building to meet the occupant's desired comfort while maximizing the efficiency of the HVAC system. Programs allow the temperature in a room to rise and fall based on occupancy levels.

Depending on the season and weather, systems may be programmed to allow the temperature set point to raise or drop at night when the occupants are sleeping or the building is vacant. Systems can then either raise or lower the set point to a more comfortable temperature in the morning just prior to wake-up or occupancy. If a building is left vacant all day, the set point may be set lower or higher for the entire day, depending on the season.

Figure 36-31 illustrates a typical program for a heating day. The thermostat is set at 63°F (17.2°C) during the night. Prior to the occupants waking up at 7:00 am, the thermostat calls for heating. The home warms up to the set point of 73°F (22.7°C) for the hour that the occupants spend getting ready for work or school and eating breakfast. The set point then falls back to 63°F (17.2°C) when the occupants are away, **Figure 36-32**.

From 8:00 am until 4:00 pm, the house is vacant, and the building is allowed to cool down to 63°F (17.2°C). Prior to 4:00 pm, the thermostat calls for heat and begins warming the building. By 4:00 pm, building temperature has risen to the set point of 73°F (22.7°C). The house remains this warm until bedtime at 11:00 pm.

Courtesy of Nest Labs, Inc. Copyright© 2012 Dwight Eschliman

Figure 36-32. Thermostat in automatic away mode.

Figure 36-33 illustrates a cooling program. In the morning, prior to the peak power rate hours and a reduced thermal load from the sun and outdoor temperature, the air conditioning cools the building to 70°F (21°C). During the day, when occupants are away, the building temperature is allowed to rise up to a 73°F (22.7°C) set point. Before occupants return home, the thermostat turns on the air conditioning to cool the building back down to

Copyright Goodheart-Willcox Co., Inc.

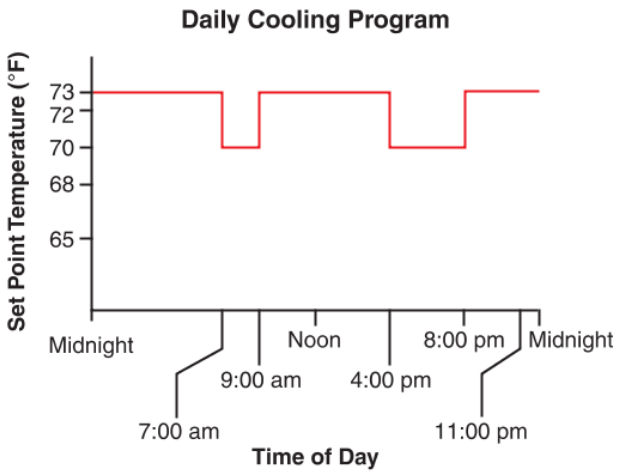

Goodheart-Willcox Publisher

Figure 36-33. Daily cooling program.

Insteon

Figure 36-34. This home energy monitor displays the cost of kilowatts per hour next to indoor temperature.

70°F (21°C) by 4:00 pm. In the later evening, with lower solar load, the set point is allowed to rise back up to 73°F (22.7°C). It is important to not allow the building to heat up during the day. The air-conditioning system would then have to remove the large amount of heat accumulated throughout the day.

The advantage of using a programmable thermostat is that it can provide energy savings when a building is not required to maintain a high or low set point, such as when occupants are away. Many electric utilities charge higher rates for "peak times," when energy consumption is at its highest. During daylight working hours, energy usage is at its peak. By programming the heating and cooling system to a more moderate set point during peak periods, daily energy consumed is reduced, which results in a smaller power bill. Home energy monitoring systems can display the cost of kilowatt per hour and energy usage data. This can serve as a reminder to conserve energy as much as possible, **Figure 36-34**.

Manufacturers are developing new technologies and thermostat features that allow increased self-monitoring of energy usage over time. These thermostats can show occupants hours of system run time, electrical energy used, and other useful information, **Figure 36-35**.

Venstar

Figure 36-35. This thermostat shows hours of heating system operation over the course of several days. By knowing our habits and temperature preferences, we can program thermostats to run only when and as much as needed to prevent wasting energy.

Thinking Green

Programming a Thermostat

A properly programmed thermostat can significantly reduce a customer's utility bill without sacrificing comfort. The thermostat should be programmed to adjust temperature to save energy during periods that the occupants are typically asleep or away. However, the system must maintain the energy-saving temperature for an extended period (several hours) or the energy used to restore the normal temperature will offset any savings.

36.7 Thermostat Installation

Thermostat wiring varies by manufacturer. Each thermostat should come with installation instructions, which must be followed to ensure proper operation. When replacing a thermostat, it is common practice to use the existing thermostat wiring from the furnace, boiler, or heat pump. It is always a good practice to note which wires were connected to the old thermostat terminals and label these accordingly.

Copyright Goodheart-Willcox Co., Inc.

36.7.1 Thermostat Wiring

Although thermostats and units may be wired differently, there are some basic conventions and terminal designations used when wiring a thermostat:

- Rc—cooling power.
- Rh—heating power.
- R—power.
- Y—condensing unit (compressor) contactor.
- Y2—compressor contactor (stage 2).
- C—24 V common connection.
- W—heat relay (stage 1).
- W2—heat relay (stage 2).
- G—fan relay (cooling only).
- CR—cooling relay.
- O/B—heat pump reversing valve.
- Aux/E—heat pump auxiliary heat.
- HMD—humidification.
- DHD—dehumidification.
- Ts—outdoor temperature switch.
- Out, Temp, OD, OAS, or ODT—outdoor air temperature sensor.
- In or IDT—indoor temperature sensor.
- M1 or DMP—air duct damper control.

Thermostats with auxiliary functions may use different terminal designations than those shown here. Always refer to manufacturer literature to be certain.

Removing an installed thermostat reveals its subbase. Wiring terminals with letters show what parts of a system are controlled by the thermostat, **Figure 36-36**.

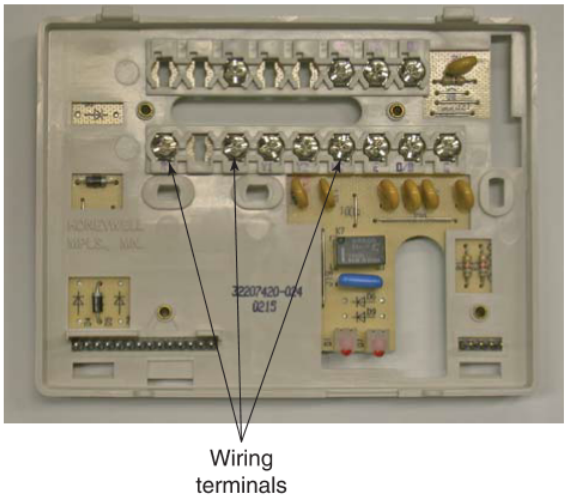

York International Corp.

Figure 36-36. Subbase of a low-voltage thermostat.

Look for the corresponding wiring terminals in a system's condensing unit, air handler, and any other system control board, **Figure 36-37**.

The subbase may also contain other components. Of importance to thermostat subbase installation are ***DIP switches***. *DIP* stands for *dual in-line package*. These are small switches grouped together in a single package. They are commonly found on circuit boards and used to manage system settings. Usually, they are positioned once for the commissioning of a system and then left alone. A subbase may have DIP switches used

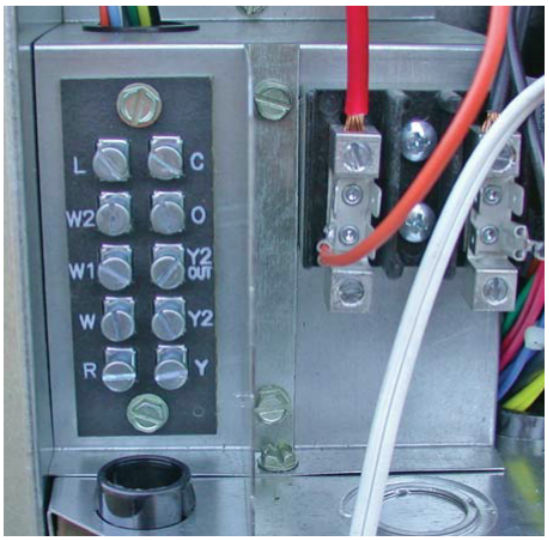

A

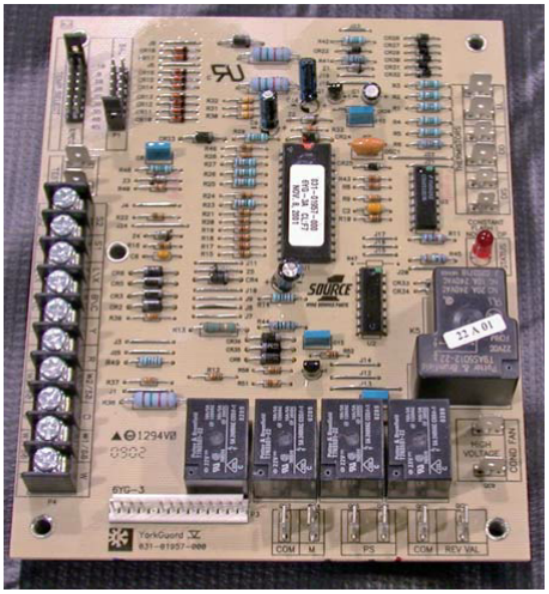

B

York International Corp.

Figure 36-37. Note the thermostat wiring terminals located on the left side. A—In a condensing unit. B—On a system control board.

10

Copyright Goodheart-Willcox Co., Inc.

to indicate the type of heating and cooling system that will be connected to the thermostat, **Figure 36-38**.

After installing a new thermostat, always test it to make sure that it operates as it should. Some thermostats include some self-diagnostic capabilities. To check wiring connections before programming a thermostat, use the test outputs function available on certain thermostat models. This initiates operation immediately by bypassing any time delays, which confirms whether the wiring is correct before programming all days, times, and set points, **Figure 36-39**.

Venstar

Figure 36-39. The test outputs function bypasses any time delays and initiates operation immediately. This function quickly checks the wiring connections and can be a quick starting point for troubleshooting a system.

36.7.2 Free Cooling

Building owners and system designers continue to look for energy saving methods and technologies. A great way to reduce electrical power consumption is to utilize free cooling. However, this is only available under certain conditions. Indoor air must be warm and in need of cooling. Outdoor air must be low in temperature and preferably also low in humidity.

Free cooling is the use of an air-side economizer to draw in cool outdoor air to reduce indoor air temperature. An air-side economizer controls an HVAC system's blower and duct dampers. By opening and closing certain dampers, a system's blower can draw in the cool outdoor air and exhaust warm indoor air. This is considered *free cooling* because only dampers and the blower are using electrical power. The compressor does not run during free cooling. Since a compressor consumes much more electrical power than a fan does, using a few dampers and a blower to draw in cool outdoor air is comparatively, but not actually, "free," **Figure 36-40**.

A thermostat must be equipped to control free cooling. The thermostat will need to have an outdoor air temperature sensor connected. When outdoor air temperature is low enough, free cooling operation can begin. Some systems may also monitor outdoor humidity.

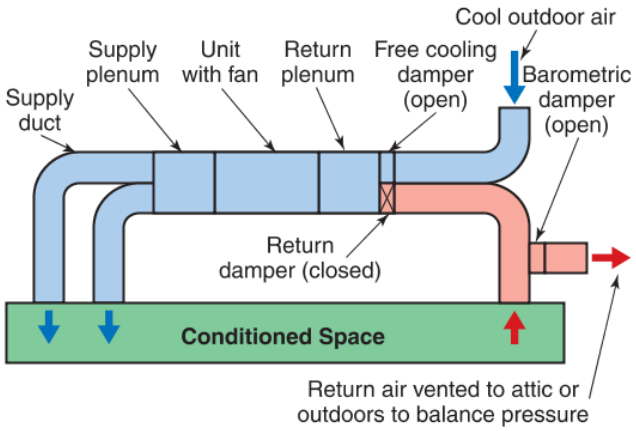

Goodheart-Willcox Publisher

Figure 36-40. A forced-air system diagram using an air-side economizer for free cooling. As indoor pressure rises, a barometric damper opens and releases return air to an unconditioned space or outdoors.

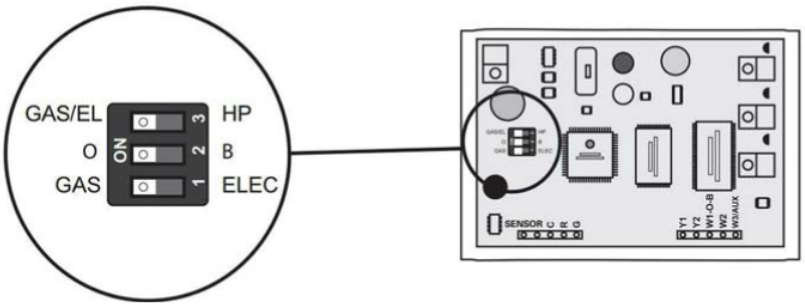

Venstar

Figure 36-38. This thermostat subbase has three DIP switches. The top switch tells the thermostat whether the system is a heat pump or uses gas or electric heat. The middle switch determines whether the heat pump reversing valve is energized for cooling or for heating. The bottom switch tells the thermostat whether the system uses gas or electric heat.

Copyright Goodheart-Willcox Co., Inc.

For these systems, relative humidity must be low enough before operation begins. This is called *enthalpy control*. For more information on enthalpy control, see Chapter 33, *Commercial Air-Conditioning Systems*.

To operate free cooling, a thermostat often must be capable of controlling more than one stage of cooling operation. Stage one cooling (Y1) can be used to operate free cooling. Stage two cooling (Y2) can be used for running the air conditioning. Thermostat terminal Y1 controls the damper positions. The diagram in the example earlier showed two motorized dampers. To control and operate these dampers requires additional step-down transformers and relays. See the wiring diagram for controlling the free cooling damper in **Figure 36-41**.

When the outdoor temperature sensor senses the cut-in temperature (65°F in this example), the thermostat initiates stage one cooling (Y1) for free cooling. The thermostat signals the damper relay, which energizes the free cooling damper. The indoor blower also turns on to begin drawing in the cool outdoor air. When outdoor air temperature rises too high or the thermostat is satisfied with the cooling indoors, the thermostat cycles off the free cooling operation.

36.7.3 Installing Wireless Thermostats

The use of wireless thermostats with remote sensors has made the location of such thermostats less critical. Remote, wireless temperature and humidity sensors allow the control to be placed in a convenient location, while the sensors are located in the best location to measure room conditions. The location of a thermostat sensor is important. Similar to a traditional thermostat, it should be located in an average-temperature location. An example would be an inner wall about 5′ above the floor. It should be out of the way of furniture and beyond the reach of small children. The location of a temperature sensor should be changed if it is affected by any of the following:

- Drafts or dead air spots behind doors and in corners.
- Hot or cold air from ducts.
- Radiant heat from the sun or an appliance.
- Concealed pipes and chimneys.
- Unheated areas behind it, such as an outside wall.

With ***Wi-Fi enabled thermostats***, a user can operate the thermostat while away from the building. Whole home automated systems enable a homeowner to monitor and adjust settings using an Internet-connected device, **Figure 36-42**.

Control4 Corporation

Figure 36-42. Thermostat operation from a tablet and smartphone.

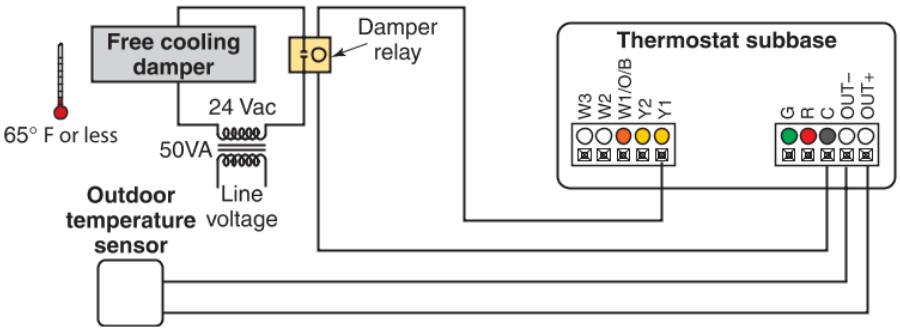

Venstar

Figure 36-41. A forced-air system wiring diagram for free cooling.

Copyright Goodheart-Willcox Co., Inc.

Wi-Fi enabled home automation systems include a controller that is connected to the buildings lighting, window shades, and security system. Whole home automation allows maximum energy conservation. For example, at night the system can automatically reduce the thermostat set point, shut off room lights, and close blinds to conserve energy.

Pro Tip

Setting Up Online Account and Downloading Apps

Learning and Wi-Fi enabled thermostats often require setting up an online account and downloading software to operate the thermostat from a wireless device or the Internet. Following installation, remember to assist the homeowner in setting up their online account and selecting the correct app. This will allow the homeowner to monitor their energy savings and operate their thermostat remotely.

36.8 Thermostat Diagnostics

It is good practice to begin troubleshooting a comfort cooling or heating system using the thermostat. This is a quick way of locating the source of system malfunction. The process usually determines that the cause is one of the following:

- Wiring problem.
- Furnace/air handler problem.
- Thermostat problem.

The diagnostic sequence for a heating thermostat and a cooling thermostat is almost the same with two major differences in operation. A heating thermostat is considered "calling for heat" if the setting on the thermostat is two or more degrees *over* room temperature. A cooling thermostat is considered "calling for cooling" if the set point is two or more degrees *under* room temperature. A technician can check whether a thermostat is operating according to these principles by measuring voltage across its electrical terminals. See **Figure 36-43** for terminal configuration for heating and cooling operation.

Before checking voltage, make sure the thermostat's fan switch is set to auto. When taking a voltage reading, the meter is sensing a difference in electrical potential. The voltage across an "open" connection is the source voltage. The voltage across a "closed" connection is 0 V. There is no voltage difference between the two sides of a closed switch, **Figure 36-44**.

Before taking measurements, determine what type of thermostat is installed. The two most commonly used thermostats are low-voltage and line-voltage. On a low-voltage thermostat, source voltage will most often be 25 Vac to 28 Vac. On a line-voltage thermostat, source voltage will be 120 Vac or 240 Vac. Always use a meter to identify what the source voltage is before attempting any diagnostics or repairs.

Thermostat Terminal Checking Chart		
Wiring Terminals	HVAC System Mode of Operation	
	Heating On	Cooling On
R and W	Closed	Open
R and Y	Open	Closed
R and G	Open	Closed

Goodheart-Willcox Publisher

Figure 36-43. A thermostat's electrical terminal configurations for a comfort heating and cooling system. This table assumes that the thermostat's fan setting is on auto.

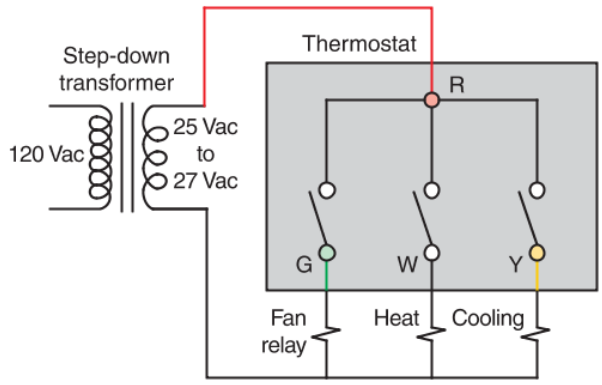

Goodheart-Willcox Publisher

Figure 36-44. A basic low-voltage thermostat wiring diagram.

Pro Tip

Keep a Mercury Switch Level

Before beginning diagnostic steps on a thermostat, check whether it uses a mercury switch. If so, make sure that the thermostat is mounted level. A thermostat that is mounted crooked can tilt a mercury switch so that the system cycles on and off outside of calibration. Do not just "eyeball" the thermostat. Check it with a level.

36.8.1 Heating System Diagnostics

Before diagnosing a heating system using a thermostat, review any available manufacturer literature about the system. Be sure to know what each thermostat terminal controls before measuring. Common terminal designations are listed here:

- Rc—cooling power.
- Rh—heating power.

Copyright Goodheart-Willcox Co., Inc.

- R—power.
- Y—compressor contactor.
- C—24 V common connection.
- W—heat relay.
- G—fan relay.
- O/B—heat pump reversing valve.

Pro Tip

Fan Relay

Frequently, the thermostat's G (fan relay) terminal does not control the auto fan setting in heating mode. Instead, the blower fan may be controlled by a temperature switch or a time-delay switch in the furnace. The furnace switch delays the starting of the blower until the furnace has heated the air in the heat exchanger. If the fan is controlled by the thermostat and starts on the call for heating, the cold air in the ductwork would be blown into the conditioned space.

Troubleshooting a Heating System with a Low-Voltage Thermostat

The following procedure can be used to troubleshoot a low-voltage thermostat for a heating system that is not working:

1. Turn off the power at the furnace.
2. Place a jumper across terminals R and W on the furnace circuit board or control connections.
3. Turn the power back on and wait up to three minutes. Make sure the access door or panel switch is depressed, else it will prevent the furnace from turning on.
4. If the furnace does not turn on, the problem is inside the furnace and troubleshooting should continue inside the furnace. If the furnace does start the heating cycle, the problem is not in the furnace. The problem is in the thermostat or its wiring. Continue the following diagnostic steps.
5. Turn off the power at the furnace and remove the jumper.
6. Turn on the power again and make sure the door switch is depressed.
7. Go to the thermostat, remove the thermostat from the subbase, and use a meter to check the voltage across terminals R and W. The meter should read between 25 Vac and 27 Vac.
8. If the meter does not read between 25 Vac and 27 Vac, there is a problem with the wire between the furnace and the thermostat. This wiring problem will need to be fixed.
9. Examine the thermostat cable. All thermostat cables have multiple wires, and sometimes there may be one or more wires that are not in use. If the cable has an unused wire, use it to replace the wire connected to terminal R or W. Before trying this, take more electrical measurements.
10. To determine which wire to try switching first, measure voltage across terminals R and G and then across terminals R and Y. If the meter does not read source voltage for either measurement, the problem is most likely the wire connected to terminal R. If the meter indicates source voltage, the problem is most likely the wire connected to terminal W.
11. Based on these measurements, switch out the problem wire with the unused wire. Change the wire connections at the terminals on the thermostat and at the furnace to the unused conductor.
12. Measure voltage across terminals R and W on the thermostat. If the meter does not read source voltage across terminal R and any of the other terminals mentioned, it is likely that the entire thermostat cable between the furnace and the thermostat is completely broken. A new thermostat cable will need to be installed and all wire connections redone.
13. If the meter does read 25 Vac to 27 Vac across terminals R and W, the problem is likely the thermostat.
14. For a final check, secure a jumper across terminals R and W on the thermostat subbase. The heating system should cycle on within three minutes. System operation under this condition confirms that the thermostat is faulty. After diagnosing the problem, remember to remove any jumper installed.
15. If the thermostat is an electronic thermostat, check the batteries before recommending a replacement thermostat. Dead batteries will cause a battery-powered thermostat to fail.
16. After determining that the thermostat is the problem, check whether the thermostat uses a mercury switch. If yes, replace the thermostat and the subbase. Work with the customer to locate an acceptable electronic thermostat replacement. Many customers with older, round mercury thermostats prefer a round electronic thermostat, as these have the same appearance and functionality.

Copyright Goodheart-Willcox Co., Inc.

36.8.2 Cooling System Diagnostics

Diagnosing a cooling system problem using a thermostat is similar to diagnosing a heating system problem. The main difference is to check across terminals R and Y and also across terminals R and G, instead of R and W. When a thermostat is calling for cooling, the R to Y terminals will be closed to energize the cooling contactor or relay in the condensing unit. In addition, the R to G terminals will be closed to energize the relay controlling the indoor blower motor.

Pro Tip

Thermostat Vibration

If a building owner notices that a system frequently turns on and then off without running for the entire duration of its scheduled operation, seek out the location of the thermostat. Systems may short-cycle because the thermostat is exposed to vibration. Examples would include stairways or shaky walls. Always mount a thermostat to a firm structure.

36.8.3 Multistage HVAC Systems

Thermostats that have a W2 or Y2 terminal are considered multistage thermostats. A thermostat in heating mode will not close across terminals R and W2 until the temperature drops down below the set point by more than 3°F, in most cases. In cooling mode, terminals R and Y2 will not close until the temperature rises above the set point by more than 3°F. These temperature separations between first and second stages are adjustable in many cases. When troubleshooting second-stage problems, be sure to adjust the thermostat to close the correct terminals.

36.8.4 Low-Voltage Measurements

Voltage readings of 24 Vac and below do occur on low-voltage circuits, but this low value should be seen as a sign of a problem. A 24 Vac measurement means that the transformer is aging or one of the loads on the circuit is pulling more electrical current than can be provided by the transformer. In some cases, this can be caused by the addition of accessories that draw more current into the circuits. Take measurements to find if a high current draw is causing the excessive voltage drop.

Diagnosing a High Current Draw on a Transformer

When looking for voltage drops or high current draws, you apply the principles of Ohm's law. Electrical loads in series drop voltages. Loads in parallel add amperages. For a control circuit that has low voltage, rule out one of these problems and focus on the remaining.

1. Begin by tracing the thermostat circuit from the step-down transformer to the R terminal at the furnace or air handler, then to the thermostat, and then to the heating relay or cooling contactor. Look for any electrical loads that are connected in series with these conductors.
2. If you find a load that should be in the circuit, remove it and retest the voltage to see if the problem is solved.
3. Trace the parallel loads in the circuit. While tracing the circuit, create a ladder diagram schematic that includes all the electrical loads, switches, and other devices. If a manufacturer's schematic is available, use it as a guide but verify that the actual system matches the schematic. The circuit may have been modified after being installed. While tracing through the circuit, look for any add-on devices, such as humidifiers, air cleaners, and zone control panels. All of these devices should have their own transformers, but may be installed incorrectly. Always refer back to manufacturer directions regarding proper installation practices and wiring recommendations.
4. After identifying all the electrical loads in the control circuit from the secondary side of the step-down transformer back to common, add all the current ratings, then multiply this total by the control circuit voltage (typically 24 V) to determine the actual volt-amperes (VA) load. This value should be less than the VA rating of the secondary of the transformer. If the number is not lower, replace the transformer with another transformer that has a VA rating greater than the value calculated.
5. Check the amperage of each load. Start with one branch of the parallel circuit and use a clamp-on ammeter that has a .10 A scale. If that is not available, wrap the wire around the clamp 10 times and then divide the resulting reading by 10. Energize the circuit and record each reading on the ladder diagram.
6. Compare each amperage load measurement with the current rating on the device's label. The current measured should never be greater than the current rating on the label of the electrical load. If it is greater, replace that electrical load. Most low-voltage loads cannot be repaired.

Copyright Goodheart-Willcox Co., Inc.

Note: There are certain electrical loads to look at more closely. These include the following: cooling contactors in the condenser, time delay relays in the condenser, fan relays in the air handler, solenoids in the liquid line, gas valve solenoids, zone dampers, zone control panels, zone valves, gas ignition controls, oil primary controls, and some thermostats themselves.

Pro Tip

More Than Just Measurements

While working through a system and taking amperage readings at each load, listen to the loads in operation. Chattering contactors or relays are a sign that that load is not functioning properly. Be certain to run through all modes of operation (heating, cooling, fan-on, and fan-auto), as each mode energizes different control voltage loads. If the system uses a heat pump, check the reversing valve and run through the defrost sequence.

36.8.5 Closing a Troubleshooting Service Call

After repairing a thermostat wire problem or replacing a thermostat, ask the customer if they want to keep the broken part. If not, remove and properly dispose of any parts and mercury or digital thermostats. In addition, survey the work space and double-check that any jumpers have been removed, covers replaced, and electrical switches returned to their proper position. Show the customer that the repair worked and help them set the thermostat for their comfort. Make sure to leave any manuals or paperwork that came with the thermostat.

If any older thermostats were replaced with a web-enabled Internet thermostat, ensure that the customer knows how to access the thermostat from their computer or smartphone. Taking the time to make sure the customer fully understands the equipment now will increase the customer's satisfaction and may prevent a callback in the future.

36.8.6 Line-Voltage Thermostats

Diagnosing a defective line-voltage thermostat on an electric heating system is somewhat different from diagnosing a low-voltage thermostat. Line-voltage thermostats normally provide power directly to the baseboard or ceiling panel heating units. While line-voltage thermostat operation is less complex, risk of electric shock is higher. Review all electrical safety precautions before dealing with line voltage.

Diagnostics Using a Line-Voltage Thermostat

1. Check that the circuit breakers for the electric heating units are turned on and not open.
2. Carefully remove the thermostat cover and then remove the thermostat from the subbase.
3. Review system literature and wiring in order to anticipate the correct voltage measurement. Set your meter to a higher-than-expected setting and measure the voltage across the two terminals. The measurement should read line voltage across the open circuit. Note that some electric heat systems can use 120 Vac or 240 Vac.
4. If the measurement is not line voltage, there is a problem with the wiring. Depending on the system's location, further repair work may need to be done by a licensed electrician.
5. If line voltage is measured at the subbase, the problem is the thermostat and it will need to be replaced.
6. Select a similar line-voltage thermostat or an electronic thermostat specifically designed for use with line voltage. Never replace a line-voltage thermostat with a low-voltage thermostat.
7. Prior to replacing a thermostat, open the circuit breaker to disconnect the circuit. Use a voltmeter to take measurements to ensure that the electrical circuit is open.
8. Replace the thermostat.
9. Re-energize the circuit once repair work is complete and verify that the problem has been corrected.
10. As with any other repairs, show the customer what was replaced, offer to leave any replacement parts, and show them how to operate the new thermostat.

36.8.7 Domestic and Commercial Refrigeration Systems

Thermostats are also used on domestic and commercial refrigeration systems. Most of these thermostats are line-voltage thermostats and control the evaporator fans, condenser fans, compressors, and liquid line solenoid valves. These thermostats should be diagnosed in the same way as an electric heat line-voltage thermostat. However, remember that a refrigeration thermostat closes on a rise in temperature, rather than a drop in temperature.

Copyright Goodheart-Willcox Co., Inc.

36.9 Zoned Systems

Zoned systems are designed to heat or cool different areas of a building to different comfort, humidity, and ventilation settings. Zoned systems can control water flow, forced air, or electrical supply in different areas of a building's HVAC system. Zoned systems are found in both residential and commercial environments. While the basic operations are identical, the size of these systems varies. The simplest zoned system is electric baseboard heating.

Most electric baseboard heating systems are zoned. Each area of the building has a separate line-voltage thermostat that controls one set or one single baseboard. For example, a house would have a separate thermostat in each bedroom, bathroom, kitchen, and open area. Each thermostat would control the temperature in that specific area of the home by turning its baseboard on and off as the temperature falls and rises. This allows each room to be set for the comfort of the room's occupants.

Another example of zoning is found in residential hydronic heating for baseboards. As with the example of electric heat, a home may have two or three thermostats (zones). Each thermostat controls a valve or a pump coming off of the central boiler. When the thermostat calls for heat, it sends a demand signal to the boiler. The demand signal causes the boiler to start producing heat to supply the operating pump or open zone valve. When the thermostat for the temperature zones calling for heat are all satisfied, the valves will close, the pumps will stop, and the boiler will shut down and wait for the next call for heat.

Another type of zoned system is the forced-air zoned system. These systems use multiple thermostats to control dampers in ductwork that open or close based on the call for heat or cooling in different comfort zones of a building. The zone thermostats are also connected to the air handler or furnace through a zone control board or panel. This central zone control board tells the air handler to heat, cool, dehumidify, or ventilate based on the priority of each zone and what the thermostat's demand signals, **Figure 36-45**.

Forced-air zoning is more complex than the electric baseboard heat or hydronic zoning because of the need to maintain airflow, limit velocity, and limit pressures within the ductwork and across the blower motor in the equipment. To understand this better, take a 4-ton (48,000 Btu/hr) cooling system with three zones in a home as an example. The three zones are the basement, first floor (ground), and second floor (upstairs). For air conditioning, airflow must maintain 400 cfm (cubic

ZONEFIRST

Figure 36-45. Basic components of a forced-air zone system.

Copyright Goodheart-Willcox Co., Inc.

feet per minute) per ton of air conditioning. Therefore, a 4-ton system must maintain an airflow of 1600 cfm (400 cfm × 4 tons).

If airflow drops below this level, the evaporator coil will start to build up ice and freeze. This presents a unique challenge when designing a zoned system. What happens when an air handler designed to supply 1600 cfm of airflow to three zones in a building receives a call to supply airflow to only one zone? Not only does the coil freezing up present problems, but also the remaining zones will have an increased velocity of air causing noise in the ductwork and diffusers. These areas may also experience cooling but without any dehumidifying of air. Additionally, the increased velocity may cause uncomfortable drafts for the occupants of the space being conditioned. Another risk in this scenario is that the increased air pressure at the blower wheel will cause the indoor blower motor to increase its amperage drawn. At a minimum, increased amperage draw will increase a customer's electric bill. At worst, increased amperage draw can begin to overheat and burn out the blower motor. This is assuming that the blower motor is a single-phase motor, which is very common. However, if an HVAC system's blower motor is an ECM (electronically communicated motor), the customer's power bill will rise, and the system will be extremely noisy as the motor attempts to compensate for the restriction in the ductwork.

A zoned system for a three-floor house needs to be able to respond to a single zone's call for cooling without forcing more cold air onto the other two zones. Zone 2 (upstairs) may call for cooling, but the basement and ground floor are already comfortable and would get cold with any more cooling. This means that only 1/3 of the building may need to be heated or cooled at any given time. Thus, the zoned system must be able to maintain sufficient airflow across the evaporator coil, even when automatic zone dampers in the ductwork close to prevent airflow into two of the three zones.

Most systems now overcome this problem by installing a ***bypass damper*** in ductwork between the supply and the return at the air handler. Often the bypass damper is a ***barometric damper***. This is a damper that opens and closes in reaction to static pressure. If the pressure in the ductwork exceeds a certain level, the damper opens and allows the air to flow from the supply to the return to be recycled across the coil and sent out again into the supply plenum, **Figure 36-46**.

A three-zone system would require several components:

- Three thermostats.
- Three electric dampers (or more based on existing ductwork).
- One zone control panel.
- One static pressure bypass damper.

Optional components could include the following:

- Freezestat on evaporator coil to prevent ice buildup.
- Temperature sensors for supply and return ducts to sense if air is too cold or hot.
- Outdoor temperature sensor for outdoor reset.

The thermostats for most modern zoned systems are the same ones discussed earlier in this chapter. Some of the older zoned systems have what is called a ***master-slave thermostat design***. The ***master thermostat*** sets the mode of the system. For example, it determines whether the system runs in heating or cooling mode. The ***slave thermostat*** monitors the temperature of the zone in which it is located. However, if the slave thermostat calls for cooling while the master thermostat is set for heating, cooling will not cycle on until the master thermostat's mode is changed to cooling. The wiring and design of the slave thermostats are different from the standard thermostat, and the service technician should make sure to replace the thermostat with one recommended by the manufacturer.

In modern systems, the zone control panel regulates the entire system. It takes each thermostat input and determines what area of the conditioned space

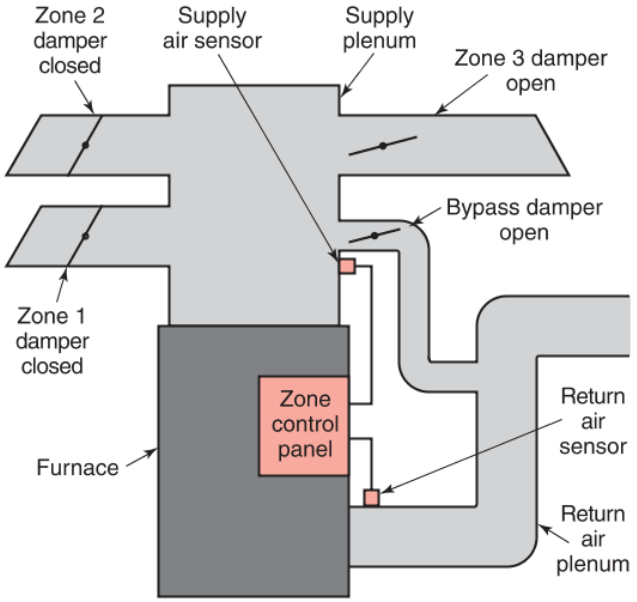

Goodheart-Willcox Publisher

Figure 36-46. When a zone control panel receives a call for cooling to only one zone (example is Zone 3), it performs several functions. It opens the zone 3 damper, closes the zone 1 and zone 2 dampers, and opens the bypass damper as needed to maintain proper static pressure and velocity.

Copyright Goodheart-Willcox Co., Inc.

needs to receive airflow. It determines if it is a call for heat, a call for cooling, and in some situations, which zone should have priority. The zone panel then opens the appropriate damper and closes the others. Higher-end zoned systems can tie into a building control system or a home automation system to provide a more integrated level of control.

Caution

Work in a Zone Control Panel

Zone control panels do not have replaceable parts, so it is extremely important to follow all manufacturer directions when installing and servicing them. Be extremely careful with loose wires and jumpers, as the terminal connections are very small and close together, **Figure 36-47**.

Rectangular zone dampers are typically multiple-blade dampers, **Figure 36-48**. Some are opposing blade dampers, and all dampers must fit tightly inside the main supply trunks to each zone on the system. Many of them use foam tape around their edges to prevent leakage.

When mounting zone dampers into ductwork, make sure that the blades move freely and do not scrape against the side of the ductwork in any location. Zone dampers should also be installed in a location where they can be easily removed for future service. Make sure that there is enough clearance to completely remove the damper from the ductwork.

For most modern zoned systems, zone damper motors are primarily normally open. A ***normally open damper*** is in the open position when power is not applied to its motor. When power is applied, a small shaded-pole motor drives the damper closed. When the system calls for the damper to open or when the system cycles off, the damper returns to the open state using the force from a small spring mounted on the motor shaft. There are also normally closed dampers that work in the exact opposite manner of normally open dampers. A ***normally closed damper*** is in the closed position when power is not applied to its motor. A spring holds the damper closed when no power is applied. When energized, a motor opens the damper.

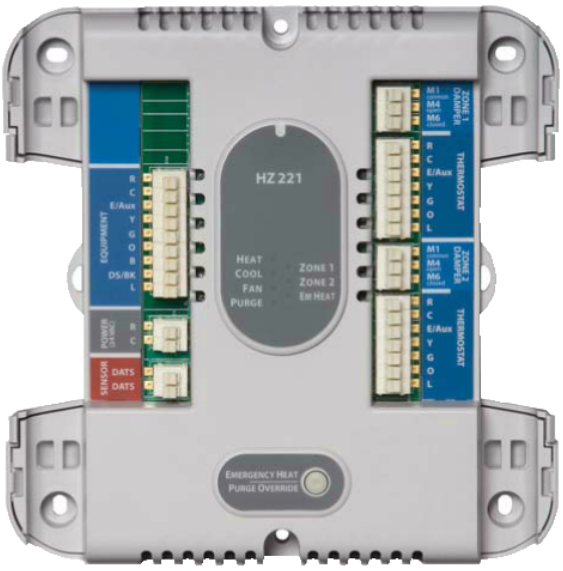

Honeywell, Inc.

Figure 36-47. This zone control panel operates with a two-zone heat pump system.

Jackson Systems, LLC

Figure 36-48. Rectangular zone damper.

An example of a normally open damper is a smoke or fire damper used where ductwork penetrates a firewall in a commercial building. The fire damper is held open with the motor. If there is a fire or building power is removed, the damper closes to prevent smoke from migrating through the ductwork.

Some older dampers and those used in some commercial systems are ***power-open/power-closed dampers***. These dampers require power to open and power to close. A technician can easily identify these dampers by looking at the number of wires connected to the damper motor. A normally open damper or normally closed damper will have two wires connected to its motor. A power-open/power-closed damper will have three to five wires connected to its motor, depending on the configuration of the damper.

Power-open/power-closed damper motors require an end switch that comes premounted on the motor that actuates when the damper is in the closed position.

Copyright Goodheart-Willcox Co., Inc.

An end switch on a damper can be used in two different ways. An end switch can close when the damper is closed, or it can open when the damper is closed.

Most often, an end switch is wired in series with the damper motor. When the damper reaches its closed position, the end switch opens, which interrupts the current flow to the damper motor. By opening, the end switch stops the electrical signal to the motor from the zone control panel when the damper is in the correct position.

On a few of the higher-end commercial dampers, mainly those tied into building automation systems, a motor shaft–mounted end switch closes when the damper is in the correct position. This closed switch sends a signal to the automation system that is monitoring and controlling the damper positions, **Figure 36-49**.

There are two general types of static pressure bypass dampers. The first and most frequently used type is a barometric damper. This consists of a blade damper with adjustable weights that determine the pressure at which the damper opens. Often, these weights are on a lever on the outside of the ductwork. The adjustable weight is set to keep the damper closed until the pressure in the ductwork exceeds the engineered maximum level. As the pressure in the ductwork pushes open the bypass damper, supply air is allowed to flow directly into the return duct. This bypassing action maintains proper airflow across the evaporator coil, **Figure 36-50**.

The second type of bypass damper uses a motor-driven blade that opens as the pressure in the ductwork rises past a preset level. A zone control panel uses pressure sensors in the supply and return plenums to monitor air pressure and signal when to open the electric dampers, **Figure 36-51**.

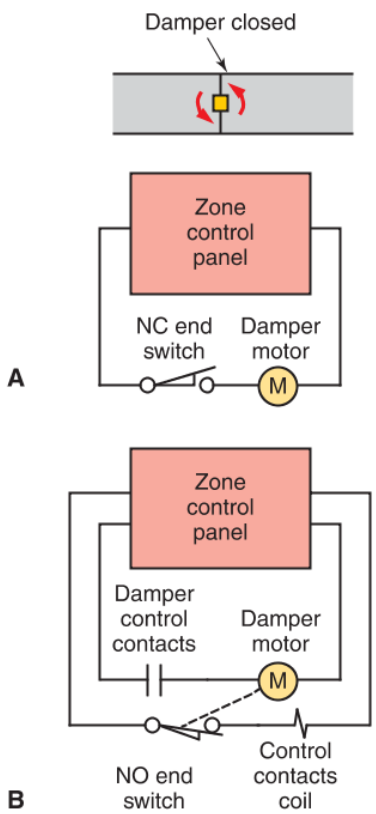

Goodheart-Willcox Publisher

Figure 36-49. Damper end switch wiring options example. Check manufacturer diagrams when available. A—A normally closed (NC) end switch opens when the damper reaches the closed position. B—A normally open (NO) end switch closes when the damper reaches the closed position. A NO end switch signals the controller, which opens contacts to stop the damper motor.

Jackson Systems, LLC

Figure 36-50. Rectangular single-blade barometric damper used for bypass.

ZONEFIRST

Figure 36-51. Static pressure controller for use with an electric bypass damper.

Copyright Goodheart-Willcox Co., Inc.

Even though controls monitor air pressure and bypass airflow to maintain certain operational conditions, some zoned systems use additional safety components. A ***freezestat*** is a thermostat set to open if air temperature above the evaporator coil drops to 33°F. When a freezestat opens, it either directly de-energizes the cooling contactor or sends a signal to the zone control panel. Most freezestats used in residential and light commercial applications close when the temperature rises 5°F. Check the manufacturer documentation for exact temperatures. On some larger commercial applications, especially those where there is a hydrocoil (chilled or heated water) and outside air intakes, freezestats may have manual resets. The manual reset allows a technician to inspect the system for damage before restarting. When a zone control panel senses a freezestat signal, the control either opens an electric bypass damper or de-energizes the cooling contactor to shut off the compressor until the evaporator temperature rises.

Most air-conditioning evaporators operate best at a coil temperature of 34°F to 36°F. Any colder than that risks the chance of developing ice. Lower airflow rates can also cause the coils to freeze. Ice acts as an insulator. Ice buildup will prevent heat from being absorbed from the airstream across the coil into the refrigerant inside the coil. Since heat from the air is not reaching the refrigerant, a frozen coil will worsen over time as the ice builds up across the openings in the fins. More ice means lower airflow, which causes the formation of additional ice.

As an evaporator coil freezes, the boiling of the refrigerant in the evaporator slows and eventually causes liquid refrigerant to flow to the compressor. This can cause ice formation on the compressor and compressor failure.

A frozen evaporator coil reduces airflow to the spaces needing cooling. Conditioned spaces will feel warm and damp. Once a coil is frozen, the only way to defrost it is to cycle off cooling mode (turn off the compressor). Running the blower fan speeds the defrost process.

If a major buildup of ice is on a coil that is installed upstream of a gas, oil, or electric furnace, a technician can turn the blower on, set all zones to heating, and allow the heat to run.

Caution

Frozen Evaporator in a Heat Pump

If a frozen coil is on a heat pump, run the heat pump in heating mode. However, be careful to make sure that electric backup heat does not come on. Do this by either disconnecting the W1 wire or by turning off the circuit breaker or electrical disconnect to the electric heating elements. Airflow is restricted by the ice buildup. If the electric heating elements were to turn on, they could overheat and cause damage.

Caution

Condensate Drain Lines during Defrost

When defrosting a frozen coil, make sure the condensate lines are not plugged. If the drain pans or drain lines overflow, they could cause building damage or wet areas outside the equipment. If water does overflow and spill, be sure to clean up all water to prevent mold growth. It is a good idea to clear condensate lines before starting to defrost an air-conditioning or refrigeration coil.

Forced-air systems that also include heating have evolved even further by the use of a duct temperature sensor that senses the air temperature in the supply plenum. Based on this temperature, the zone control panel can control the furnace's heat production, the cooling contactor, outside air intakes, and bypass dampers to ensure the correct airflow at the correct air temperature is moving into the supply ductwork to the rest of the building, **Figure 36-52**.

Due to more stringent energy codes, recently installed zoned systems require a zone control panel that connects with an outside air temperature sensor. This allows heating and cooling to adjust supply air temperature based on outdoor air. This adjustment allows multistage equipment to be staged based on the true heating and cooling needs of the environment and building envelope. An example of this is how a day with an outside temperature of 50°F requires a lower Btu/hr output from the furnace than a 0°F day. The furnace can change the temperature of its supply air based on outdoor air temperature. This ability to control the output of a system based on outdoor temperature offers large energy cost and footprint savings.

36.9.1 Zoned System Operational Sequence for Heating

The sequence of operation for most zoned systems in heat mode is as follows:

1. A thermostat calls for heating in a single or multiple zones.
2. A switch closes across the R and W contacts on the zone control panel.
3. Zone dampers close for any zones not requiring heating.
4. Once all dampers are in their appropriate positions, the zone control panel closes R to W contacts on the furnace control board.
5. The heat sequence initiates, and the furnace provides heating to the ductwork where open and closed dampers route airflow to the zones required.

Copyright Goodheart-Willcox Co., Inc.

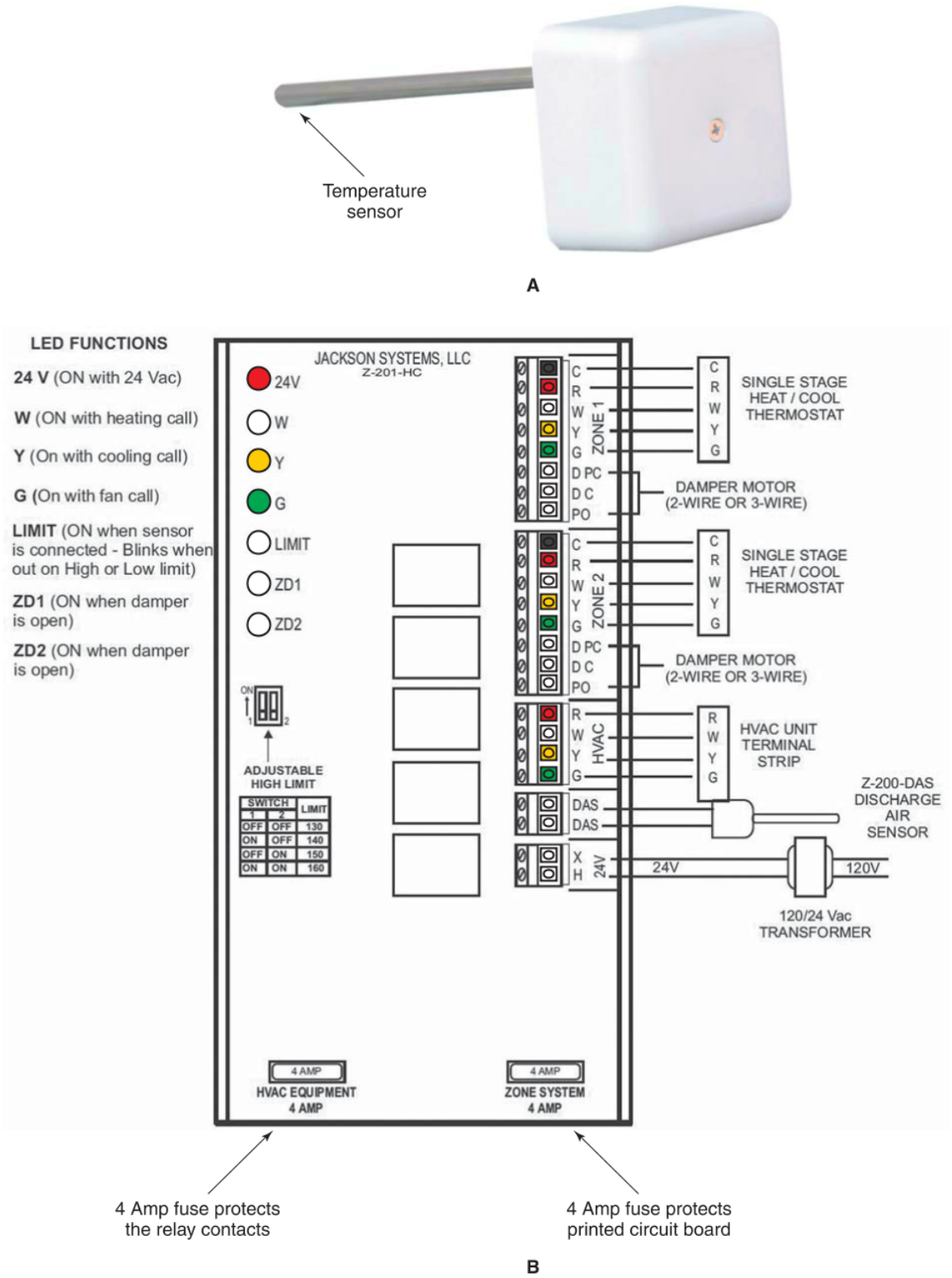

Jackson Systems, LLC

Figure 36-52. A—Discharge air temperature sensor. B—A two-zone control panel wiring diagram showing a discharge air sensor connection.

Copyright Goodheart-Willcox Co., Inc.

6. As temperatures rise in each zone, their thermostats become satisfied and open the appropriate R to W contacts on the zone control panel. As the R to W contacts for a zone open, the zone damper for that zone closes, unless it is the last zone requiring heat.
7. Once the last zone is satisfied, the furnace begins its cool-down sequence, and all zone dampers open to allow airflow to all zones.
8. The furnace shuts off the blower, and the system waits for its next call for heat or cooling with all dampers in the open position.

36.9.2 Zoned System Operational Sequence for Cooling

The operational sequence for cooling is almost identical to heating with the exception of the need to monitor evaporator coil temperature to prevent ice buildup:

1. A thermostat calls for cooling in a single or multiple zones.
2. A switch closes across the R and Y contacts and also across the R and G contacts on the zone control panel.
3. Zone dampers close for any zones not requiring cooling.
4. Once all dampers are in their appropriate positions, the zone control panel closes the R to Y contacts and the R to G contacts on the air handler control board.
5. The cooling sequence initiates, and the air handler provides cooling to the ductwork where open and closed dampers route airflow to the zones required.
6. As the temperatures drop in each zone, their thermostats become satisfied and open the appropriate R to Y contacts and R to G contacts on the zone control panel. As the R to Y and R to G contacts for a zone open, the zone damper for that zone closes, unless it is the last zone requiring cooling.
7. Once the last zone is satisfied, the air handler continues to run for a few minutes after the R to Y contacts have opened. This ensures that the evaporator coil has a chance to defrost and drain properly. All zone dampers open to allow airflow to all zones.
8. The air handler shuts off the blower, and the system waits for its next call for heat or cooling with all dampers in the open position.

While this is the basic process, there are some variations of this depending on how the system is engineered. In commercial buildings and some high-end residential installations, the blower does not completely shut down at the end of the heating or cooling cycle. Rather, all dampers open, and the blower shifts to a low-speed operation to maintain a slight airflow through the ductwork. In commercial buildings, this is especially important to allow outside air to be brought into the building for outside air ventilation requirements and building pressurization.

36.9.3 Troubleshooting Zoned Systems

Troubleshooting zoned systems involves both air and electrical diagnostics. When beginning to troubleshoot a zoned system, find out what is not happening and why it is not happening. The experienced technician does not concentrate on the zone that the customer reports as having a problem, but rather looks at the system as a whole. While the following diagnostic procedure may need to be changed slightly based on a given system, most often this procedure will help in locating the problem, **Figure 36-53**.

Troubleshooting zoned systems is best done by working from big to small. Begin with overall airflow and work down to individual zone dampers and modes. It is important to remember that the problem may not be with the area the customer is complaining about as the entire system needs to work as a whole.

Troubleshooting a Zoned System

On arrival to the service call, introduce yourself to the customer, get a summary of the problem, and ask the customer to show the locations of all the thermostats on the forced-air system.

Initial Airflow Inspection

1. As the customer identifies each thermostat, adjust its setting. Change it to one of these settings:
   - "Fan-On" (preferred).
   - "Cooling" with the temperature 10°F below set point.
   - "Heat" with the temperature 10°F above set point for heating.

   Of these three options, the "Fan-On" setting is preferable, as it will not lower the temperature of the building, and it provides more time to troubleshoot before needing to change setting due to discomfort. Adjust each of the thermostats on the system to the same setting.
2. Go into each zone and verify that there is airflow from each supply register in the space. This confirms that the system is working and that all zone dampers are open. If airflow is absent or reduced in a zone, check the zone damper as described in the *Damper Inspection*

Copyright Goodheart-Willcox Co., Inc.

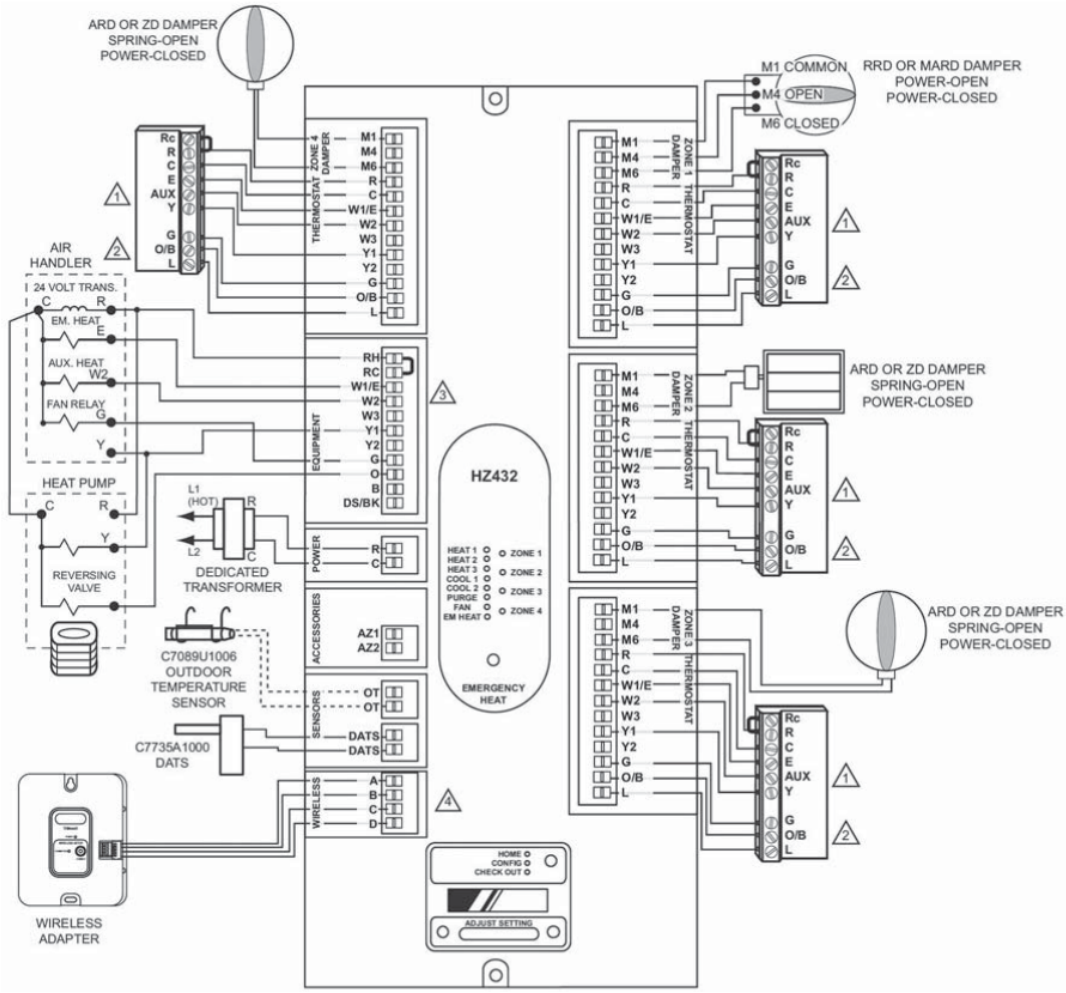

Honeywell, Inc.

Figure 36-53. A zone control panel wiring diagram for a four-zone heat pump system.

section that follows. Solve any airflow issues before continuing with the system evaluation.

Dampers Closed Inspection

1. Go to one thermostat and turn the thermostat off. If using the "Fan-On" function, switch the thermostat back to "Fan-Auto."
2. Wait a few minutes for the damper to cycle closed.
3. Verify that the airflow has stopped, meaning the zone damper has shut. If airflow continues, the damper has not closed. Check the zone damper as described in the *Damper Inspection* section that follows. Solve the damper issue before continuing to check the other zones.
4. Repeat the three previous steps for each of the remaining zones except the last zone, ensuring that each zone's damper has closed and airflow has stopped.
5. After checking the second-to-last zone, open one of the other zones in order to test the final damper sequence. This will prevent the system from shutting down when the final zone is turned off. System shutdown would return dampers to their "normal" position, which may be open or closed.
6. When testing the final zone, locate the barometric damper. Verify that this damper is opening to allow air to pass from the supply to the return. Verification is done by watching the weighted lever on the side of the damper. It should move as the pressures increase and decrease. If the damper is not opening properly, try manually moving the arm toward the open position.

Copyright Goodheart-Willcox Co., Inc.

With a single zone calling, the damper should move to an almost fully open position. When all the zones are open, the bypass damper should be closed, because maximum airflow is needed to condition all the zones.

Damper Inspection

The following is a general procedure for troubleshooting a damper that is not opening or closing at the proper time. The procedure uses a "stuck-open" damper as an example, but the same concepts would apply to a "stuck-closed" damper. Always refer to manufacturer's product-specific service manual if available.

1. Locate the zone control panel and find the zone number for the zone that is not working properly.
2. Check to make sure the wires are connected to the proper terminals.
3. Check to make sure that the indicator light for that zone shows that the zone is no longer calling for fan, cooling, or heating. If it is still calling for an operation and the thermostat is off, check the wiring or thermostat problems as discussed earlier in this chapter.
4. On the zone control panel, locate the open damper's motor connections. Verify what type of damper it is. If there are two wires, is it normally open or normally closed? Measure the voltage readings on the two terminals.
   - If the damper is normally open and the zone is not calling for operation, there should be more than 24 Vac on the common and control terminals.
   - If the damper is normally closed and the zone is not calling for operation, there should be 0 Vac on the common and control terminals.
   - If the zone has a power-opened/power-closed damper with three wires, take two measurements. Across the common and closed terminals, there should be 24 Vac. Across the common and open terminals, there should be 0 Vac.

   If the readings are incorrect, further diagnose the zone control panel by following manufacturer directions. In most cases, by disconnecting the thermostat wires from the zone panel, the damper should go to its closed position and voltages. If the thermostat terminals do not properly control the voltage output of the zone control panel, most likely it is a bad zone control panel.
5. After verifying that the zone panel is working correctly, check the damper motor in the ductwork. Take a meter reading to make sure that the motor is getting the proper voltage. If it is not, trace the wire between the zone control panel and the motor and check all of its connections.
6. If the motor is getting the proper voltage, locate the lever that is found on the damper motor. Cycle the damper by hand. If it does not move, remove the damper from the ductwork and find out why the linkage is not moving. This could happen because of a broken linkage, the blades are binding, or something that is caught on the blades is interfering with movement.
7. If there is nothing binding the damper, check the motor by measuring the resistance of its winding. Perform the following steps:
   - First, turn off the system.
   - Second, disconnect the wires from the damper motor to isolate the motor from the circuit.
   - Use an ohmmeter to ***ohm out*** the winding (measure its resistance). If the motor shows a small resistance, it should be good. If the motor shows an OL or infinite resistance, the damper's motor is bad. Replace the motor.

Cooling Check

1. After testing all the zones for proper damper operation, adjust all zones to "cooling" mode and turn down the thermostat to 5°F under room temperature. If this is a master-slave system, make sure the system switch is set to cooling mode.
2. Wait about five minutes and check that the condenser contactor has energized and that the system is cooling. If the condenser contactor does not energize, measure whether there is 24 Vac across the Y and C terminals on the zone control panel output. If there is not 24 Vac, troubleshoot the zone control panel and find out if there is a blown fuse. In addition, check whether there is 24 Vac across the Y and C terminals on the thermostat side, 0 Vac across R and Y terminals, and 24 Vac across R and W terminals. Reading these measurements confirms that the zone control panel and attached thermostats are working properly.

Copyright Goodheart-Willcox Co., Inc.

3. If the condenser contactor is not energized, find the condenser and take voltage measurements at the following locations:
   - 24 Vac across the condenser contactor coil.
   - Line voltage (230, 240, or 408 Vac) across the power contacts on the condenser contactor.
   - Line voltage across the disconnect or top of the contactor.
   - 24 Vac across the control terminals in the condensing unit control box (same terminals as were measured in the zone control panel).

Heating Check

1. If the cooling mode of the system is fully operational, check operation in heating mode. Change all thermostats to heating and increase their set point to about 5°F above room temperature. If working on a master-slave system, remember to change the system selector to heating mode.
2. Once again, wait about five minutes and then recheck all dampers. They should all be open and the system should be heating. If the system is not heating, verify that there is 0 Vac across R and W, 24 Vac across R and Y, and 24 Vac across R and C on the thermostat side. On the system side of the zone control panel, measure for 24 Vac across W and C, 0 Vac across Y and C, and 24 Vac across R and C. If any of these are not correct, troubleshoot the zone control panel according to manufacturer's directions.
3. If there is 24 Vac between W and C on the system side of the zone control panel, begin to troubleshoot the furnace. If a gas-fired furnace, check the following:
   - Ignition sequence.
   - Proper gas flow.
   - Any tripped safety devices.
   - Pressure switches.

   Gas furnace troubleshooting is described in Chapter 41, *Gas-Fired Heating Systems*. Oil furnace troubleshooting is described in Chapter 42, *Oil-Fired Heating Systems*.

Service Call Wrap-Up

After verifying proper operation for fan only (airflow), cooling, and heating of the zones, explain all of your findings to your customer. Reset all thermostats to normal operation and set points. Verify that all covers are back on the motors and zone control panels and that all tools are removed.

Copyright Goodheart-Willcox Co., Inc.

Chapter Review

Summary

- In basic terms, a thermostat is a sensing device that reacts to temperature change. To the average person, a thermostat is the controller used to start, stop, or modulate the operation of a heating and cooling system.
- Common temperature-sensing devices used in thermostats include thermistors and bimetal coils. A temperature-sensing device is used with a switching device, such as a reed switch, contacts and magnets, or a mercury switch.
- Modern thermostats have numerous features and options, including various power sources, different temperature-sensing and switching devices, display options, service reminders, programming options, and Internet/mobile device communication capabilities.
- To prevent indoor temperature from moving too far from set point, thermostats use anticipators. A heat anticipator is a resistance heating coil that produces just enough heat to cycle off heat production so that air temperature does not overshoot set point beyond acceptable temperature swing. A cooling anticipator is a resistance heating coil that produces just enough heat to cycle on cooling mode before air temperature rises to cut-in set point.
- A multistage thermostat can control the heating or cooling capacity of a system. These thermostats often have extra wiring terminals for heat stage (W1, W2, etc.) and cooling stage (Y1, Y2, etc.) operation.
- Line-voltage thermostats operate on line voltage: 120 Vac or 240 Vac. These thermostats can control high current loads, such as electric heating elements.
- Low-voltage thermostats operate on 24 Vac from a step-down transformer.
- Millivolt thermostats operate on mere millivolts supplied by a thermocouple or thermopile.
- When installing a thermostat, follow the manufacturer's wiring diagrams. Set subbase DIP switches according to the type of system that the thermostat will control. Test wiring for proper connections and operation before programming the thermostat.
- Free cooling is the use of an air-side economizer. The economizer operates when outdoor air temperature (and sometimes humidity) is low. Duct dampers are adjusted so that the indoor blower draws in outdoor air for cooling.
- Wireless thermostats allow an HVAC system to be controlled from anywhere. These systems still require one or more temperature sensors.
- When troubleshooting an HVAC system, begin at the thermostat and determine whether the problem is in the wiring, in the furnace or air handler, or in the thermostat.
- When troubleshooting a line-voltage thermostat, be mindful of electrical dangers and set a multimeter to read appropriate voltage levels.
- Zoned systems are designed to heat or cool different areas of a building to different comfort, humidity, and ventilation standards. Forced-air zoning operates using ductwork, dampers, sensors, and related controls. Often, a barometric damper controls a bypass duct to handle some of the airflow when one or more zones are not calling for conditioning. Forced-air zoned systems may use a master-slave thermostat arrangement or a zone control panel communicating with different room thermostats.
- A freezestat is a thermostat that opens when evaporator temperature drops to around 33°F. This protects that evaporator from freezing over.
- When troubleshooting forced-air zoned systems, observe system operation to determine what is not happening and then determine why it is not happening. View the system as a whole. Work from big to small, beginning with overall airflow and working down to individual zone dampers.

Review Questions

Answer the following questions using the information in this chapter.

1. A sensing device that reacts to temperature change is a _____.
   A. humidistat
   B. pressurestat
   C. sensostat
   D. thermostat

Copyright Goodheart-Willcox Co., Inc.

2. A common temperature-sensing component that reacts to temperature change by changing shape to actuate a reed switch or mercury switch is a _____.
   A. bimetal strip
   B. diaphragm
   C. thermistor
   D. thermocouple
3. To reduce or eliminate electrical arcing in an electrical control, use _____.
   A. a long bimetal strip coiled tightly
   B. magnets to pull in electrical contacts
   C. a mercury switch
   D. Any of the above.
4. What is the condition called in which the residual heat blown through the ductwork raises the temperature of the conditioned space above the thermostat set point after a heating thermostat has shut off a furnace?
   A. Heat wave.
   B. System lag.
   C. System overshoot.
   D. Temperature swing.
5. The total difference of the high and low temperature in a room, including values below the cut-in temperature and above the cut-off temperature, is called _____.
   A. contact point bounce
   B. system lag
   C. system overshoot
   D. temperature swing
6. A condition in which a furnace turns on but the temperature of a room drops too low before the heating effect is felt is called _____.
   A. chill wave
   B. system lag
   C. system overshoot
   D. temperature droop
7. The devices used by mechanical heating thermostats to turn on early enough to prevent temperature from dropping below its cut-in set point are called _____.
   A. cooling anticipators
   B. heat anticipators
   C. temperature limit switches
   D. zone controls
8. The devices used by mechanical cooling thermostats to turn off early enough to prevent system overshoot or temperatures below the thermostat set point are called _____.
   A. cooling anticipators
   B. heat anticipators
   C. temperature limit switches
   D. zone controls
9. A combination thermostat is used to control a(n) _____.
   A. combination lock
   B. cooling contactor only
   C. heating and cooling system
   D. indoor blower's operation only
10. A gas furnace with a multistage thermostat uses _____ to control its heat capacity.
    A. a cooling anticipator
    B. multiple sets of electric resistance heating coils
    C. a reed switch
    D. a two-stage or modulating gas valve
11. Line-voltage thermostats typically operate at _____.
    A. 30 mVdc to 50 mVdc
    B. 1 Vdc to 5 Vdc
    C. 24 Vac to 30 Vac
    D. 120 Vac to 240 Vac
12. Low-voltage thermostats typically operate at _____.
    A. 30 mVdc to 50 mVdc
    B. 1 Vdc to 5 Vdc
    C. 24 Vac to 30 Vac
    D. 120 Vac to 240 Vac
13. Low-voltage thermostats often use _____ to switch and control high current, line-voltage devices, such as fans and compressors.
    A. expansion valves
    B. relays
    C. solenoids
    D. verbal commands
14. The temperature-sensing component that reacts to temperature change by changing its electrical resistance is a _____.
    A. bimetal strip
    B. diaphragm
    C. thermistor
    D. thermocouple

Copyright Goodheart-Willcox Co., Inc.

15. To calculate the amperage load that a low-voltage thermostat's step-down transformer can handle, perform the following calculation: _____.
    A. volt-amperes ÷ resistance
    B. volt-amperes ÷ volts (primary side)
    C. volt-amperes ÷ volts (secondary side)
    D. volt-amperes ÷ watts
16. A millivolt thermostat generates its own electric current from heat applied to its _____.
    A. bimetal coil
    B. Bourdon tube
    C. thermistor
    D. thermocouple
17. Millivolt thermostats can be used to control _____ systems.
    A. central air conditioning
    B. centrifugal chiller
    C. heat pump
    D. standing-pilot light heating
18. Being able to adjust conditioned space temperature remotely using a tablet PC, smartphone, or laptop is specifically an advantage of a _____ thermostat.
    A. multistage
    B. millivolt
    C. power-stealing
    D. wireless
19. Tapping into a fan, cooling, or heating terminal and drawing a small milliamp current to recharge its internal battery is a feature of a _____ thermostat.
    A. multistage
    B. millivolt
    C. power-stealing
    D. wireless
20. A programmable thermostat uses a(n) _____ that functions as a clock and controls indoor climate for different blocks of time.
    A. anticipator
    B. mercury switch
    C. microprocessor
    D. reed switch
21. The thermostat wiring designation for cooling mode is _____.
    A. C
    B. R
    C. W
    D. Y
22. The thermostat wiring designation for power from the step-down transformer is _____.
    A. C
    B. R
    C. W
    D. Y
23. The thermostat wiring designation for heating is _____.
    A. C
    B. R
    C. W
    D. Y
24. The thermostat wiring designation for the fan relay is _____.
    A. Aux/E
    B. C
    C. G
    D. O/B
25. The thermostat wiring designation for energizing a heat pump's reversing valve is _____.
    A. Aux/E
    B. C
    C. G
    D. O/B
26. When installing a thermostat's subbase, some system settings may need to be managed using _____ switches.
    A. bellows
    B. diaphragm
    C. DIP
    D. reed
27. When outdoor air is low in temperature and humidity, a forced-air system can provide free cooling by using the following components, *except* _____.
    A. a barometric damper for exhaust air
    B. duct dampers
    C. the compressor
    D. the indoor blower
28. A good location where a thermostat should be installed is _____.
    A. behind a door or in a tight corner
    B. in direct sunlight
    C. on an inner wall
    D. on an uninsulated outer wall

Copyright Goodheart-Willcox Co., Inc.

29. When taking measurements on an energized circuit for low-voltage thermostat diagnostics, set a multimeter to the _____ setting.
    A. Hz
    B. Vac
    C. Vdc
    D. Ω
30. When taking measurements on an energized circuit for low-voltage thermostat diagnostics, a 0 V reading indicates a(n) _____.
    A. closed switch
    C. good relay coil
    B. open switch
    D. All of the above.
31. In a forced-air system, zone controls prominently use _____ to regulate the temperatures of the different zones.
    A. duct dampers
    B. exhaust venting
    C. steam traps
    D. water solenoid valves
32. In a forced-air zoned system, what device operates to regulate airflow and compensate for when one of several zone dampers closes?
    A. Bypass damper.
    B. Economizer damper.
    C. Exhaust air damper.
    D. Fresh air inlet damper.
33. When pressure from airflow is reduced, most barometric dampers close due to _____.
    A. adjustable weights
    B. power-close motor
    C. shaded-pole motor
    D. spring tension
34. In a forced-air zoned system, a _____ opens when temperature right above the evaporator coil drops to around 33°F.
    A. condensate drain
    B. freezestat
    C. refrigerant relief valve
    D. zone damper
35. After speaking with the customer, begin a service call for troubleshooting a forced-air zoned system by _____.
    A. checking overall airflow in the different zones
    B. dismantling each zone damper, looking for mechanical problems
    C. replacing the zone control panel
    D. taking electrical measurements on each room thermostat

Copyright Goodheart-Willcox Co., Inc.

CHAPTER 37 Heating and Cooling Loads

Chapter Outline

37.1 Heat Transfer
37.2 Heat Loads
37.2.1 Heat Loads for Heating
37.2.2 Heat Loads for Cooling
37.3 Calculating Heat Leakage
37.3.1 Thermal Conductivity (K-Value) and Thermal Conductance (C-Value)
37.3.2 Thermal Resistance (R-Value)
37.3.3 Thermal Transmittance (U-Value)
37.3.4 Design Temperatures
37.3.5 Heat Transfer Multipliers (HTMs)
37.3.6 Heat Leakage Surface Areas
37.3.7 Heat Transfer Rate
37.3.8 Unit Conversions
37.4 Other Factors Affecting Heat Loads
37.4.1 Basement Heat Loss
37.4.2 Slab-on-Grade Heat Loss
37.4.3 Crawl Space Heat Loss
37.4.4 Infiltration and Exfiltration
37.4.5 Sun Loads
37.4.6 Heat Sources in Buildings
37.5 Heating and Cooling Load—Manual J Method
37.5.1 Local Conditions
37.5.2 Glass Loads
37.5.3 Wall, Floor, Door, and Ceiling Loads
37.5.4 Field Measurements
37.5.5 Air Leakage
37.5.6 Ducts, Appliances, and Miscellaneous Loads
37.5.7 Total Load
37.6 Software and Apps for Load Calculations

Learning Objectives

Information in this chapter will enable you to:

- Understand the principles of heat loss and heat gain.
- Compare the sources of heat loads for heating and heat loads for cooling.
- Explain the relationship between a material's K-value, C-value, U-value, and R-value and the rate at which heat is transferred through the material.
- Summarize the use of indoor and outdoor design temperatures in calculating heat loads.
- Understand the relationship between surface area and heat transfer rate.
- Compare the techniques for finding a building component's heat transfer rate using the component's C-values, K-values, U-value, and R-values.
- Explain how heat load calculations differ depending on whether the building is built on a basement, a slab, or a crawl space.
- Understand infiltration and exfiltration and explain their effects on heat load.
- Summarize the effect of sunlight on cooling loads and methods of reducing sun loads.
- Understand heat lag and its effect on heat loads.
- Identify miscellaneous smaller heat loads within a building that affect the calculation of total heating or cooling loads.
- Use a worksheet or computer program to properly calculate total heating and cooling loads for a building.

Technical Terms

crawl space
emissivity
heat gain
heat gain HTM
heat lag
heat leakage
heat load
heat loss
heat loss HTM
heat transfer multiplier (HTM)
heat transfer rate
indoor design temperature (IDT)
Manual J
outdoor design temperature (ODT)
sustainable design
thermal conductance (C-value)
thermal conductivity (K-value)
thermal resistance (R-value)
thermal transmittance (U-value)
total cooling load
total heat loss

Review of Key Concepts

Reviewing these concepts from earlier chapters will help you understand new concepts presented in this chapter:

- Heat can be transferred through radiation, conduction, convection, or a combination of any of these three methods. Heat always flows from a warmer substance to a cooler substance. (Chapter 4)
- Latent heat is heat absorbed or released as a substance changes physical state (solid, liquid, gas). Latent heat has no effect on the temperature of a substance. Sensible heat is the heat energy absorbed or released to change the temperature of a substance. (Chapter 4)
- The amount of heat energy required to raise the temperature of one pound of a substance by 1° Fahrenheit or one kilogram of a substance by 1 Kelvin is the substance's specific heat capacity. (Chapter 4)
- Air temperature can be expressed as a dry-bulb temperature or a wet-bulb temperature. A dry-bulb temperature is a measurement of the air's temperature without adjusting for the effect of humidity. Wet-bulb temperature is a measurement of the air's temperature that is adjusted for the effect of the air's humidity on evaporative cooling. (Chapter 27)
- Indoor air conditions can be affected by sun loads, heat sinks, and heat and humidity migration. (Chapter 27)

Introduction

Heating and cooling systems must be properly sized for the size and environmental conditions of the space being conditioned. The heating system should be capable of keeping the occupied space warm even on the coldest winter days for the given location. In much of the United States, typical heating systems are called upon to maintain a 70°F (21°C) inside temperature while outside temperatures fall below 0°F (–18°C) with strong winds. Air conditioning systems must be sized to provide adequate cooling capacity for the warmest days in the summer.

As new buildings are constructed and existing buildings are renovated, architects and builders strive to incorporate sustainable design. ***Sustainable design*** is the use of materials and processes that lower energy costs, reduce operating and maintenance costs, increase productivity, and decrease the amount of pollution that is generated.

All of a building's heating and cooling loads must be accurately accounted for in order to determine the specific needs for HVAC equipment. The calculation of the heating and cooling loads should be the first step in an energy audit of a building, which includes identifying sources of heat leakage and recommendations for improvement.

Thinking Green

Green Building Construction

Guidelines for green building construction and equipment can be obtained from numerous sources: National Home Builders (NAHB); US Green Building Council's Leadership in Energy Environmental Design (LEED) committee; and ASHRAE's *GreenGuide*.

Video

- Heating and Cooling Load Calculations

37.1 Heat Transfer

Heat always flows from hot to cold. This transfer of heat results in *heat loss* in the warmer object or space and *heat gain* in the cooler object or space. The transfer of heat continues until the two temperatures are equalized.

In the context of HVAC, ***heat loss*** is transfer of heat from inside to outside by means of conduction, convection, and radiation through all surfaces of a house. In the winter, a conditioned space must be heated with enough heat energy (Btu) to compensate for the heat loss to the cold outside air. For heating purposes, it is desirable to reduce heat loss.

On the other hand, during the summer, enough heat must be removed from the conditioned space to cool it as heat enters from the warm outside air. In the context of HVAC, ***heat gain*** is the increase of heat within a given space as a result of direct heating by solar radiation and of heat radiated by other sources, such as lights, equipment, or people. In summer conditions, it is desirable to minimize heat gain. In the winter, it is necessary to reduce the transfer of heat from inside the conditioned space to the outdoors. In the summer, it is necessary to prevent heat transfer from the outdoors into the conditioned space.

The amount of heat transfer from a building is determined by the building's design, construction materials, and location. Buildings should be designed to reduce heat transfer. This is referred to as making the building envelope tight. However, studies have shown that making a building too tight may result in insufficient air changes within the building. In turn, this can lead to sick building syndrome. To prevent insufficient air changes in a building with a tight envelope, it is important to bring in some fresh outside air and to maintain continuous air changes within a building. This is possible through mechanical ventilation, such as fresh outside air inlets into the supply plenum or the use of HRVs/ERVs.

37.2 Heat Loads

The ***heat load*** is the amount of heat that must be added or removed from a space in order to maintain the desired temperature in that space. For the purpose of sizing an HVAC system, the maximum heat load is determined for a period of one hour. Charts (found in numerous manuals) are used to make the computation. Heat load calculation manuals are available through various sources. The Air Conditioning Contractors of America (ACCA) publish *Manual J—Residential Load Calculation*. They also publish *Manual N—Commercial Load Calculation*.

Code Alert

Calculating Heating and Cooling Loads

The method used to calculate heating and cooling loads is typically identified in local building codes. For low-rise residential buildings, the load calculation method is typically based on ACCA *Manual J—Residential Load Calculation*. For commercial buildings, the method is typically based on ANSI/ASHRAE/ACCA Standard 183.

There are several major heat loads:

- Heat that is transmitted through walls, ceilings, and floors (conduction).
- Heat added to or removed from the air to control humidity.
- Heat added or removed by the air entering the building due to infiltration or brought in for ventilation.
- Heat produced by the sun that enters the building directly through the windows or by heating the surfaces it strikes.
- Heat from powered devices such as light fixtures, electric motors, electric or gas stoves, etc. People, too, release a considerable amount of heat.

In all cases, the heat load can be described as either sensible heat load (temperature change) or latent heat load (moisture evaporating or condensing).

37.2.1 Heat Loads for Heating

During the heating season, all heat lost from a building must be replaced in order to maintain the desired temperature within the building. The heat loads for heating include the means by which a significant amount of heat will be lost from a building, **Figure 37-1**.

The major sources of heat loss appear in the following list:

- Heat lost by conduction through walls, windows, ceilings, and floors.
- Heat lost due to warm air leaking out of the building (exfiltration) and cool air leaking into the building (infiltration) as a result of inadequate sealing.
- Heat lost due to combustion air from furnaces or fireplaces leaving the flue.

Normally, all other heat losses are ignored when calculating heat loads. They are too small to have a significant effect on the size of heating system required to meet the heating demands.

Copyright Goodheart-Willcox Co., Inc.

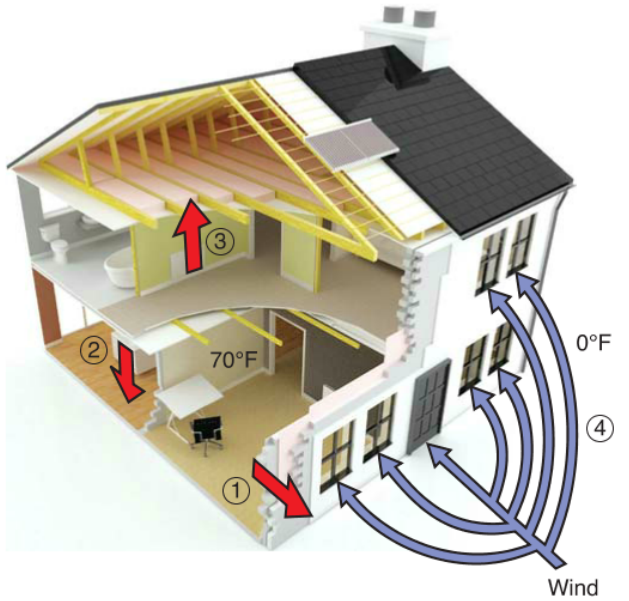

jaddingt/Shutterstock.com

Figure 37-1. Heating loads. Large heat losses occur during heating season due to cold air entering into building and warm air exiting out. 1—Heat loss through walls, doors, and windows. 2—Heat loss through slab, basement, or crawl space. 3—Heat loss through ceiling. 4—Cold air infiltration.

37.2.2 Heat Loads for Cooling

The first step in selecting the proper size for a cooling system is to determine the heat load of the space that is to be cooled. The heat load is the sum of all of the heat added to a space. A large number of factors can affect the heat load of a space, including the size, design, and construction of the space; types of equipment operating in the space, and the way the space is used.

This heat must be removed to keep the temperature and relative humidity in the space at the values desired. There are numerous sources of heat gain in warm weather. Heat gain in warm weather is often the result of heat conduction. This takes place through the walls, ceilings, floors, windows, and doors of the enclosure. Other common sources of heat gain include hot air leaking into the building (infiltration), hot air brought in for ventilation, sun load, heat from appliances and lights, and heat from occupants and any warm objects brought into the space. See **Figure 37-2**.

37.3 Calculating Heat Leakage

Heat leakage is the heat that is conducted through the walls, ceilings, and floors when there is a temperature difference between spaces. When the temperature outside a conditioned space is warmer than the temperature inside the space, heat leakage results in heat gain. When the temperature outside a conditioned space is lower than the temperature inside the space, heat leakage results in heat loss.

To calculate the total heat leakage for a space, a technician must first determine the types of materials through which heat is leaking. Keep in mind that many building components, such as walls, windows, and doors, are constructed from several different materials. In some cases, these composite components are treated as a single entity. In other cases, the type and thickness of each material in the component are considered separately.

The second step in calculating how much heat is leaking is to determine the rate at which heat transfers through the various materials. These values have been determined by building material manufacturers under laboratory conditions and are expressed as C-values, K-values, U-values, or R-values. These values can be looked up in charts and will be discussed in greater detail in the sections that follow. The formulas used to calculate heat leakage vary slightly depending on which of these values is used for the calculation.

After determining the types of materials through which heat is leaking and the rate at which heat is transferred through those materials, the third step is to determine the surface area of each type of material. The greater the surface area, the more heat will leak through the material over a given period of time.

The fourth step is to determine the temperature difference between the inside surface of the material and the outside surface. The rate that heat is

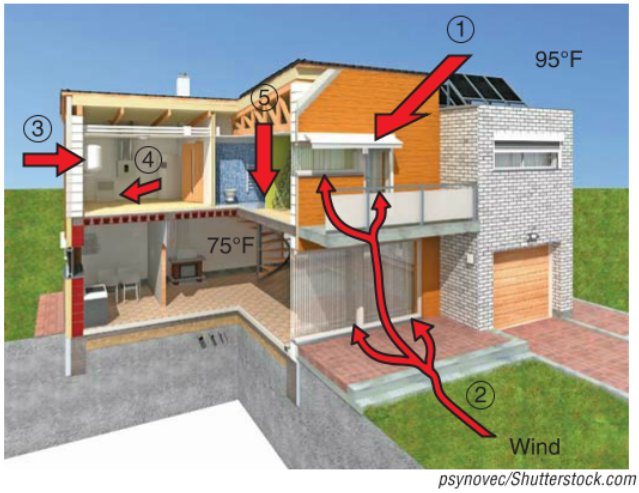

psynovec/Shutterstock.com

Figure 37-2. Cooling loads. 1—Sun load. 2—Infiltration. 3—Heat gain through walls, doors, and windows. 4—Heat gain from appliances and occupants. 5—Heat gain through ceilings.

Copyright Goodheart-Willcox Co., Inc.

transferred through a material is directly proportional to the temperature difference between the two sides of the material.

With the preliminary data collected, the total amount of heat that leaks through the material in a one hour period can be calculated. The formula used to calculate heat leakage varies slightly, depending on whether the materials' C-values, K-values, U-values, or R-values are used in the calculation. However, all of the formulas for calculating heat leakage require that the technician know the types (and in some cases, the thicknesses) of materials through which heat is leaking, the surface areas of those materials, and the temperature difference from one side of the material to the other.

37.3.1 Thermal Conductivity (K-Value) and Thermal Conductance (C-Value)

A material's ***thermal conductivity***, or ***K-value***, is a measure of the amount of heat that will pass through one square foot of the material one inch thick, in one hour, when there is a 1°F temperature difference between the two sides of the material. The units used with K-values are Btu·in/hr·ft^2·°F. Materials with high K-values transfer heat at a greater rate than those with low K-values.

A K-value is typically used to describe the thermal conductivity of a homogenous material, like insulation, drywall, wood, or glass. When calculating the heat transfer through a composite building component, like a framed wall or a foam-cored door, the K-values for the individual materials in the component are divided by the thickness of their respective materials. This calculation yields the thermal conductance (C-value) of individual materials.

$$C_1 = \frac{K_1}{X_1}$$

$$C_2 = \frac{K_2}{X_2}$$

$$C_3 = \frac{K_3}{X_3}$$

K = thermal conductivity of the material
X = thickness of the material in inches

A material's ***thermal conductance***, or ***C-value***, is a measure of the amount of heat that will pass through one square foot of the component in one hour when there is a temperature difference of 1°F between one side of the component and the other. Notice that the thermal conductance is not based on a 1″ thickness, but describes the thermal properties of the material based on its measured thickness. In most cases, a material's C-value can be looked up on a chart. In some cases, the technician may need to calculate the material's C-value based on the K-value and the thickness of the material.

37.3.2 Thermal Resistance (R-Value)

The ***thermal resistance***, also known as the ***R-value***, of a material or building component is a measure of its resistance to heat transfer. The R-value of a homogenous material is the reciprocal of the material's K-value multiplied by the thickness of the material. A *reciprocal* of a number is one divided by that number.

Formula for calculating thermal resistance (R-value) using a K-value:

$$R = \frac{1}{K} \times X$$

This equation can also be simplified into the following:

$$R = \frac{X}{K}$$

K = thermal conductivity of the material
X = thickness of the material

A material's thermal resistance can also be described as the reciprocal of the material's C-value.

Formula for calculating thermal resistance (R-value) using a C-value:

$$R = \frac{1}{C}$$

C = thermal conductance of the material

Building materials have been tested to determine the rate at which they will transfer heat. Those values are recorded in numerous charts, which can be referenced when performing load calculations. These charts usually list the thermal resistance of materials and common building components. Occasionally, a technician will need to calculate the resistance of a composite building component (like a wall made from various materials) manually.

To manually calculate the thermal resistance of a composite building component, begin by finding the thermal resistance of the individual materials in the component. Next, the thermal resistances of the individual materials are added together to find the total thermal resistance of the component.

Formula for calculating thermal resistance of a composite building component:

$$R_T = R_1 + R_2 + R_3 \ldots$$

The higher a material or component's R-value, the slower the rate at which heat will transfer through that

Copyright Goodheart-Willcox Co., Inc.

material or component. For example, **Figure 37-3** shows how adding insulation (which has a high R-value) to a wall slows down the rate of heat transfer through the wall. As a result, less heat conducts through the wall over a given period of time.

With rising fuel and energy costs and a growing focus on conservation, energy management has become a greater concern in recent years. Therefore, it is recommended that all homes and apartments have adequate thermal insulation. The purpose of thermal insulation is to slow down the transfer of heat through a wall, floor, or ceiling. The effectiveness of the insulation is directly related to its R-value. A higher R-value indicates greater effectiveness in insulating.

Many different types of insulation are used in modern construction. From an HVAC technician's perspective, the composition of the insulation is less important than its overall effectiveness, or R-value. Most insulation is made of fiberglass, but different types can be used. The type of insulation installed will depend on the type of area to be insulated, the degree of thermal resistance (R-value) required, and the space available for the insulation. Different types of insulation require different thicknesses to achieve the same level of effectiveness.

The recommended R-values for common insulation applications are shown in **Figure 37-4**. Notice that the insulation's U-value, which will be explained in the following section, is inversely proportional to the insulation's R-value. This means that a low U-value corresponds to a high R-value, and vice versa.

Recommended Thermal Insulation Values

Areas to be insulated	Recommended values	
	U-value	R-value
Ceiling with unheated space above	.08	12
Exterior wall	.07	14
Wall with unheated space on one side	.10	10
Floor over unheated space	.07	14

Goodheart-Willcox Publisher

Figure 37-4. Some recommended thermal insulation values for homes and apartments.

37.3.3 Thermal Transmittance (U-Value)

The ***thermal transmittance***, or ***U-value***, of a building component is very similar to the component's thermal conductance, or C-value, but it includes an adjustment for boundary air films. A boundary air film is a thin layer of air that is molecularly attracted to a surface. Because of this attraction, the boundary air film is not replaced as frequently as the surrounding air.

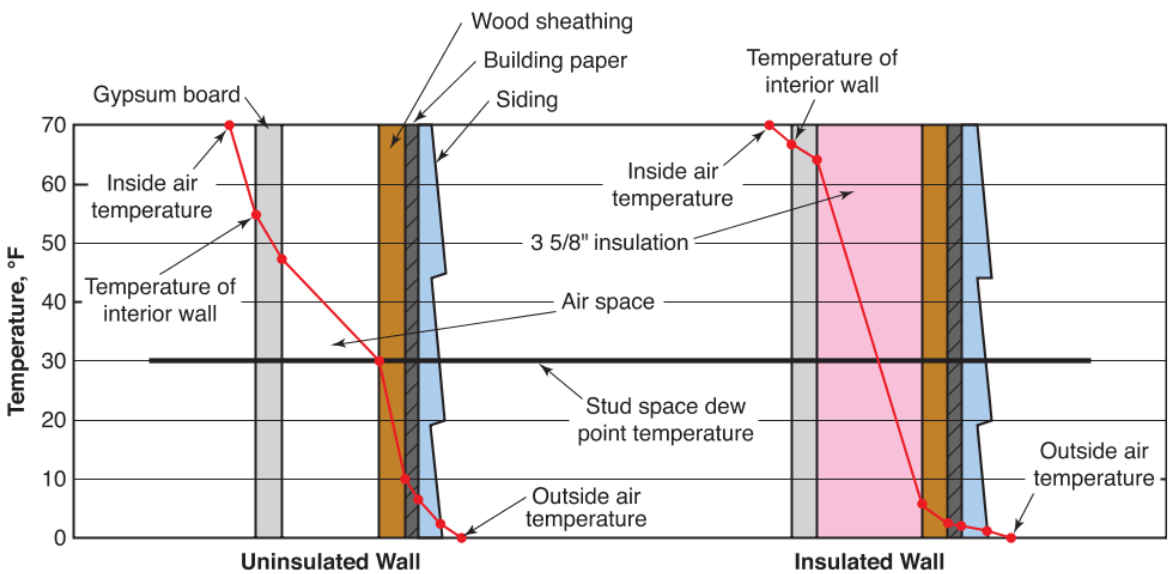

Goodheart-Willcox Publisher

Figure 37-3. This drawing compares the temperature change through an uninsulated wall and an insulated wall. Because heat transfers through the uninsulated wall quicker, the temperature of the interior wall surface drops as low as 55°F (13°C). The insulated wall maintains a temperature of 67°F (19°C) at the interior wall surface.

Copyright Goodheart-Willcox Co., Inc.

Every surface of a building has one of these thin layers of air clinging to it. Because these air films have a slightly different temperature than the surrounding air, they add a little extra insulation between the building component and the surrounding environment. See **Figure 37-5**.

The U-value of a material or component is the reciprocal of the total thermal resistance of the structure and the boundary air films associated with it. To find the U-value, add together the thermal resistances of the materials in the structure and the thermal resistances of the air films on the inside and outside surfaces. The reciprocal of this sum is the U-value for the structure.

Formula for calculating U-value:

$$U = \frac{1}{(R_{of} + R_1 + R_2 + R_3 + R_{if})}$$

R_{of} = thermal resistance of the outside air film

R_1 through R_3 = thermal resistances of the building components

R_{if} = thermal resistance of the inside air film

Like C-values, U-values are expressed in units of Btu/ft^2·°F·hr. However, unlike C-values or K-values, which are measured in a laboratory with perfectly still air, U-values assume a 15 mph wind on the outside surface and a 15 fps (1/6 mph) draft on the inside surface of the building component. Since the air in the real world is very rarely perfectly still, U-values are generally slightly more accurate than K-values or C-values.

The U-value for most types of construction can be obtained from reference books published by the American Society of Heating, Refrigerating and Air-Conditioning Engineers (ASHRAE). **Figure 37-6** is a condensed table that includes some of the more common constructions. Note that this table lists both the component's U-value and R-value.

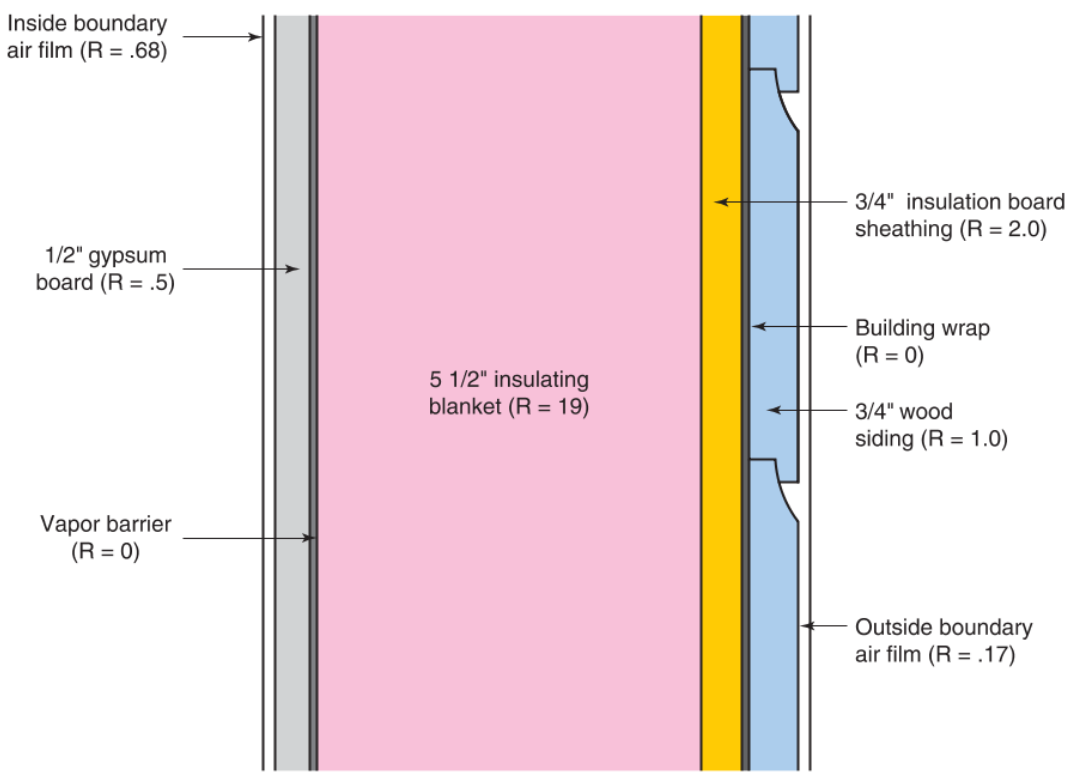

$$\text{U-value} = \frac{1}{.68 + .5 + 0 + 19 + 2 + 0 + 1 + .17} = \frac{1}{23.35} = .043$$

Goodheart-Willcox Publisher

Figure 37-5. Drawing of an external wall section showing the inside and outside boundary air films. The wall's U-value is the reciprocal of all of the component R-values added together.

Copyright Goodheart-Willcox Co., Inc.

Constants for Heat Transmission (U- and R-Values)		
Expressed in Btu per hour per square foot per degree temperature difference, based on 15 mph wind velocity.		
General Wall Classification	**Masonry Thickness 8″**	
Masonry Construction		
	U	**R**
Brick–plain		
1/2″ wallboard	0.29	3.51
1″ polystyrene, 1/2″ wallboard	0.13	7.54
Frame Construction		
	U	**R**
Wood siding on 1″ wood sheathing, studs, gypsum board 1/2″	0.23	4.40
Wood siding, sheathing, studs, gypsum board 1/2″, 1″ polystyrene	0.07	14.43
Wood siding, sheathing, studs, 1/2″ flexible insulation, gypsum board 1/2″	0.15	6.70
Wood siding, sheathing, studs, rock wool fill, lath and plaster	0.072	13.9
Note: Frame walls with single exterior finish same as walls with wood siding		
Stucco, wood siding, studs, gypsum board	0.30	3.32
Stucco on 25/32″ rigid insulation, studs, 1/2″ rigid insulation and plaster	0.20	5.00
Stucco on 1/2″ rigid insulation, studs, rock wool fill, lath and plaster	0.074	13.50
Concrete Floors and Ceilings		
	U	**R**
4″ thick concrete, no finish	0.65	1.54
4″ concrete, suspended plaster ceiling	0.37	2.70
4″ concrete, metal lath and plaster ceiling, hardwood floor on pine subflooring	0.23	4.35
4″ concrete, hardwood and pine floor, no ceiling	0.31	3.23
Pitched Roofs		
	U	**R**
Asphalt shingles on wood sheathing	0.44	2.30
Asphalt shingles, 1″ flexible insulation	0.136	7.93
Asphalt shingles, polystyrene 1″	0.132	7.56
Windows and Skylights		
	U	**R**
Single glass	1.04	0.96
Single glass and storm window	0.56	1.79
Double glass, intermediate air space 1/2″	0.58	1.73
Hollow glass tile wall 6″ × 6″ × 4″ blocks	0.60	1.67
Brick Veneer on Frame Construction		
	U	**R**
Brick veneer, 1″ wood siding, studs, gypsum board 1/2″	0.27	3.71
Rigid insulation, studs, gypsum board 1/2″	0.25	4.00
Brick veneer, 1″ wood siding, studs, 1″ polystyrene insulation, gypsum board 1/2″	0.07	14.43
Brick veneer, 1″ wood siding, studs, rock wool fill, lath and plaster	0.074	13.5

Reprinted by permission of the American Society of Heating, Refrigerating, and Air-Conditioning Engineers, Atlanta, Georgia

Figure 37-6. Table listing U- and R-values for walls, ceilings, floors, and partitions for various types of construction and for various thicknesses. *(continued)*

10

Copyright Goodheart-Willcox Co., Inc.

Interior Walls		
	U	R
Note: In general for cooling computations, base the calculations for heat gain from adjoining non-conditioned rooms on a differential equal to 1/2 the differential to outside		
Gypsum board 1/2″ on both sides	0.31	3.23
Gypsum board 1/2″ on both sides, foam insulation	0.08	13.26

Flat Roofs with Built-up Roofing				
Deck Material	No Ceiling		Metal Lath and Plaster Ceiling	
	U	R	U	R
Precast cement tile	0.81	1.23	0.43	2.33
Precast cement tile, 1″ insulation	0.24	4.70	0.19	5.26
4″ thick concrete	0.72	1.39	0.40	2.50
4″ thick concrete, 1″ insulation	0.23	4.35	0.18	5.55
2″ wood	0.32	3.13	0.24	4.17
Flat metal roofs	0.95	1.05	0.46	2.18
Flat metal roofs, 1″ insulation	0.25	4.00	0.19	5.26

Frame Floors and Ceilings		
	U	R
Hardwood and pine flooring on joists, metal lath and plaster ceiling	0.23	4.37
Rough pine floor, wood lath and plaster ceiling	0.28	3.57
No floor, lath and plaster ceiling	0.62	1.61
No floor, metal lath and plaster ceiling, 3 5/8″ rock wool fill	0.079	12.65
No floor, lath and plaster ceiling, 1″ flexible insulation	0.17	5.9

Reprinted by permission of the American Society of Heating, Refrigerating, and Air-Conditioning Engineers, Atlanta, Georgia

Figure 37-6. Continued.

37.3.4 Design Temperatures

C-values, K-values, and U-values represent heat leakage rates based on a 1°F temperature difference between the inside and outside surfaces of a material or building component. In other words, these values are only accurate when the outside air is exactly 1°F warmer or cooler than the inside air. In order to find the heat leakage rate when the temperature difference is not 1°F, the value must be multiplied by the actual temperature difference.

When heat leakage is being calculated as a step in determining heat loads for sizing a heating or cooling system, the temperature differences used must accurately represent the most extreme conditions under which the system will be expected to perform.

Code Alert

Climate Zones and Design Temperatures

Local building codes typically specify a climate zone and design temperatures to use for calculating heating and cooling loads and other system design considerations. Always use the design temperatures and climate zones specified by the local building code.

Design Temperatures for Calculating Heating Loads

The design temperatures used to calculate heat loss are often referred to as *winter* design temperatures. The ***indoor design temperature (IDT)*** is the ideal indoor temperature, which the heating or cooling system works to maintain. The indoor design temperature is generally set to 70°F (21°C) or 72°F (22°C). The ***outdoor design temperature (ODT)*** represents extremely cold conditions for the geographical

Copyright Goodheart-Willcox Co., Inc.

region where the heating system is installed. For actual values for outdoor design temperatures, the technician must contact the local weather bureau or the local chapter of the American Society of Heating, Refrigerating, and Air-Conditioning Engineers (ASHRAE).

The outdoor design temperature is never as low as the lowest temperature recorded for the area. This is because such extreme low temperatures are usually of short duration. Residual heat in the building usually enables the furnace to cope with the extreme low temperatures for a short period of time. Instead, the outdoor design temperature represents the lowest temperature that is expected to persist for an extended period of time.

ASHRAE lists outdoor design temperatures (ODT) by latitude and elevation. In addition, the ODT temperatures are adjusted periodically to account for gradual changes in climate and long-term weather patterns. When working with design temperatures, be sure to use values that are correct for the location and are up-to-date. These are available from the local ASHRAE chapter.

ASHRAE charts give three different values for each locality. The 99.6% temperature is used for residences and small, poorly insulated office buildings. The outdoor air in the geographical region covered by the chart only falls below this temperature 0.4% of the time. In a typical year, the air temperature will only drop below this level for a total of 35 hours.

The next lowest temperature listed in the charts is the 99% temperature. This temperature is used for well-constructed and well-insulated buildings having a standard number of windows. The outdoor air in the region covered by the chart will fall below this temperature only 1% of the time. In a typical year, the temperature will drop to this level for a total of only 88 hours.

A 97.5% value, also given for each locality, means that the outside temperature is above the value listed 97.5% of the time. In a typical year, the temperature will only spend a total of 219 hours below this level. The 97.5% temperatures are used in load calculations for large buildings with considerable thermal capacity and small total window area.

For example, at one point in time, technicians in the Detroit area used –10°F (–23°C) as the outdoor design temperatures for all buildings. Now, it is recommended that 0°F (–18°C) (99.6% factor) be used for small, uninsulated buildings. For well-constructed, insulated buildings with a standard window area, 4°F (–16°C) (99% factor) is used. For large buildings with a standard number of windows, 8°F (–13°C) (97.5% factor) is used.

If the indoor design temperature is 72°F (22°C), an outdoor design temperature of 0°F (–18°C) results in a 72°F (22°C) temperature difference (TD). The 99% outdoor design temperature of 4°F (–16°C) results in a 68°F (38°C) temperature difference. The 97.5% outdoor design temperature of 8°F (–13°C) results in a 64°F (35°C) temperature difference.

Since the temperature differences are used to calculate the required system size, using the 97.5% outdoor design calculation rather than the 99% outdoor design temperature will result in an 11% decrease in the recommended size of the system. Reducing the size of the system will reduce the initial cost of the system as well as operational costs. As long as the building has a large thermal capacity and a small total window area, the smaller system will still heat the building adequately.

Be careful to use the proper outdoor design temperature (99.6%, 99%, or 97.5%) for the type of building in which the system will be installed. If the proper design temperature is in doubt, always choose the outdoor design temperatures (ODT) on the low side. Heating plants that are overworked (undersized) can cause excessive stack and chimney temperatures and may cause fires. Oversized units will be less efficient and waste energy.

In many buildings, certain areas such as closets, hallways, and attics are unheated. These spaces receive their heat from heat leakage through partitions, ceilings, and floors. These unheated areas are assumed to be halfway between the indoor design temperature and the outdoor design temperature.

Design Temperatures for Calculating Cooling Loads

The design temperatures used to calculate cooling loads are often referred to as *summertime* design temperatures. When calculating heat gain for the purpose of sizing a cooling system, technicians typically use 75°F (24°C) at 50% relative humidity (rh) for the indoor design temperature. The outdoor design temperatures are looked up on a chart and selected according to geographic region. Typically, multiple temperatures are given in the chart, including a design dry-bulb temperature and either design humidity information or a design wet-bulb temperature. The design dry-bulb temperature is used for calculating the temperature difference, and the design humidity information is used to calculate the latent cooling load.

37.3.5 Heat Transfer Multipliers (HTMs)

Depending on which worksheets or software a technician uses to calculate a building's heat loss or

Copyright Goodheart-Willcox Co., Inc.

heat gain, the technician may be required to enter a heat transfer multiplier for a building component. The term ***heat transfer multiplier (HTM)*** refers to a building component's U-value multiplied by a temperature difference. For ***heat loss HTMs***, that temperature difference is simply the indoor design temperature minus the outdoor design temperature. For ***heat gain HTMs***, the temperature difference is calculated the same way, but then adjusted for factors such as sun exposure and heat storage. Heat gain HTMs are generally looked up on a chart rather than calculated by the technician.

37.3.6 Heat Leakage Surface Areas

Regardless of how heat losses and heat gains are being calculated, the technician must know the area of all surfaces through which heat is leaking. These must be entered into the computer program, spreadsheet, or worksheet being used to calculate the heat losses or gains.

Calculating Rectangular Areas

Area is a measurement of two-dimensional space. The area of a rectangular surface is found by multiplying the surface's length by its width.

Formula for calculating the area of a rectangle:

Area of a rectangle = Length × Width

Calculating Areas for Non-Rectangular Shapes

Some special formulas must be used when finding the area of certain objects. For example, the area of a circle is found by using the formula $A = \pi r^2$. The symbol, π, is always 3.1416. The letter r represents the radius of a circle, which is one-half of the circle's diameter. The area of a circle is shown in **Figure 37-7**.

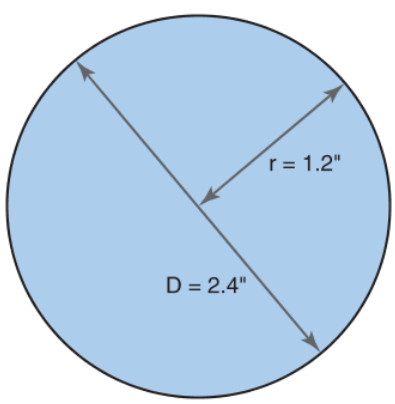

Goodheart-Willcox Publisher

Figure 37-7. The area of a circle is calculated using the formula: Area = πr^2. Diameter (D) is the width of the circle at its widest point, and the radius is 1/2 of that value.

Formula for calculating the area of a circle:

Area = πr^2

US Customary Units for Area

The US Customary units used to measure area are square inches (in^2), square feet (ft^2), and square yards (yd^2). The following are the conversion factors for converting from one US Customary unit to another:

144 in^2 = 1 square foot

9 ft^2 = 1 square yard (yd^2)

The relationship between these units is shown in **Figure 37-8**.

SI Units for Area

The SI system uses units of square centimeter (cm^2), square decimeter (dm^2), and square meter (m^2) to measure area. The relationship between these units is shown in **Figure 37-9**.

Occasionally it is necessary to convert from SI units to US Customary units. The following are conversion factors that are used:

1 square centimeter (cm^2) = 0.155 in^2

1 square decimeter (dm^2) = 15.5 in^2

1 square meter (m^2) = 1550 in^2 = 10.76 ft^2

Walls

The area and U-value of the building's walls, as well as the temperature difference from one side of the wall to the other, are required in order to calculate the amount of heat that leaks through the walls.

Formula for calculating heat leakage through walls:

Wall heat leakage = U-value × wall area × temperature difference

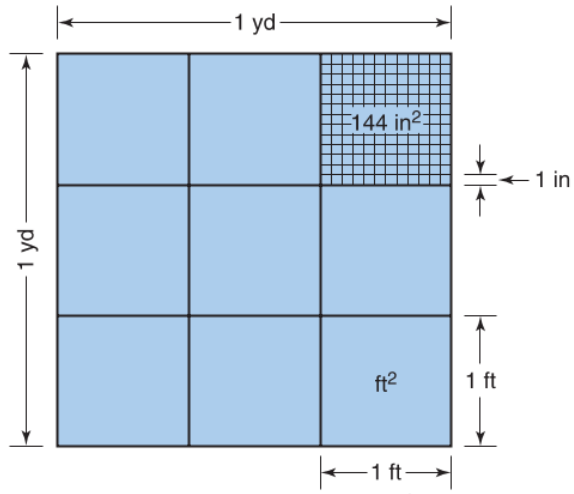

Goodheart-Willcox Publisher

Figure 37-8. This illustration shows that 12 linear inches equal 1 linear foot, and 144 square inches (144 in^2) equal 1 square foot (1 ft^2). Note that 3 linear feet equal 1 linear yard, and 9 square feet (9 ft^2) equal 1 square yard (1 yd^2).

Copyright Goodheart-Willcox Co., Inc.

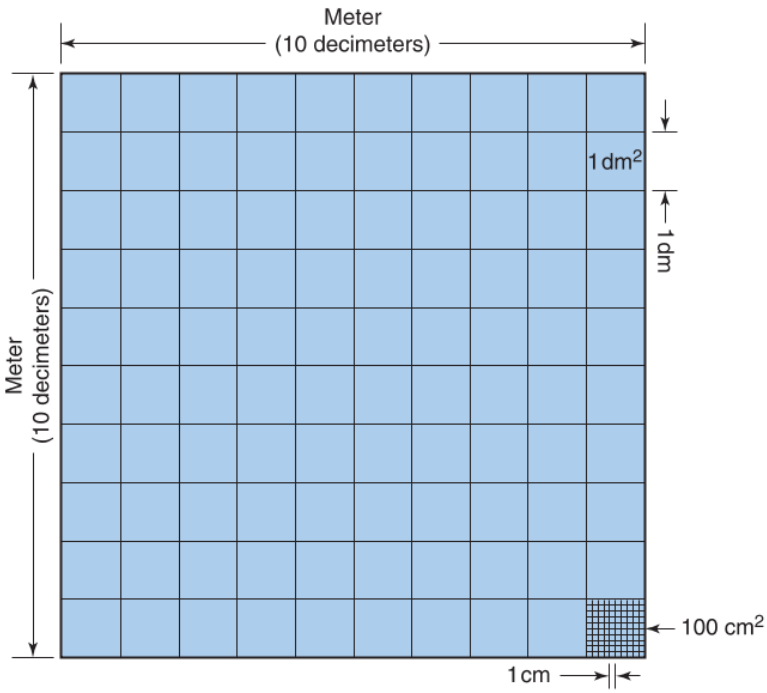

Goodheart-Willcox Publisher

Figure 37-9. This illustration shows that 10 linear centimeters equal 1 linear decimeter, and 100 square centimeters (100 cm^2) equal 1 square decimeter (1 dm^2). Therefore, 10 linear decimeters equal 1 linear meter, and 100 square decimeters (100 dm^2) equal 1 square meter (1 m^2).

To calculate the surface area of a building's external walls, the exterior dimensions of the building should be used. These dimensions result in slightly higher heat leakage loads than if the inside dimensions are used. In other words, heat losses and gains based on outside dimensions are more conservative than heat losses and gains based on interior dimensions would be.

For calculating the areas of the walls, begin by measuring the perimeter of the house. This can be accomplished by measuring the lengths of all of the exterior walls and adding them together. The perimeter of the house is then multiplied by the interior ceiling height to determine the total surface area of the building's exterior walls.

Formula for calculating total wall area:

Total wall area = perimeter × ceiling height

Example:

The house shown in **Figure 37-10** has exterior dimensions of 24′ × 32′. It has an 8′ ceiling. The total exterior surface area of the house is calculated as follows:

$$\begin{aligned}\text{Perimeter} &= L + W + L + W \\ &= 32' + 24' + 32' + 24' \\ &= 112'\end{aligned}$$

$$\begin{aligned}\text{Total wall area} &= 112' \times 8' \\ &= 896\ \text{ft}^2\end{aligned}$$

Next, the window and door areas must be subtracted from the total wall area. The result is the practical surface area of the building's exterior walls. This value is often referred to as the net wall area.

10

Pro Tip

Vaulted Ceilings

If a home has vaulted ceilings, any area calculations of the exterior walls must include the total area exposed to outdoor conditions. In other words, the triangular area at the top of the walls must be added to the rectangular area of the lower portion of the wall.

Windows

To calculate the area of a window, measure the width and height of the window, as shown in **Figure 37-11**. Then, simply multiply the width by the height.

Window construction varies considerably. Windows are commonly available as single-pane, double-pane using a storm window, or permanent double-pane. Energy-efficient windows may even have three permanent layers of glass. The permanent window (single-, double-, or triple-pane) is called the primary window.

Copyright Goodheart-Willcox Co., Inc.

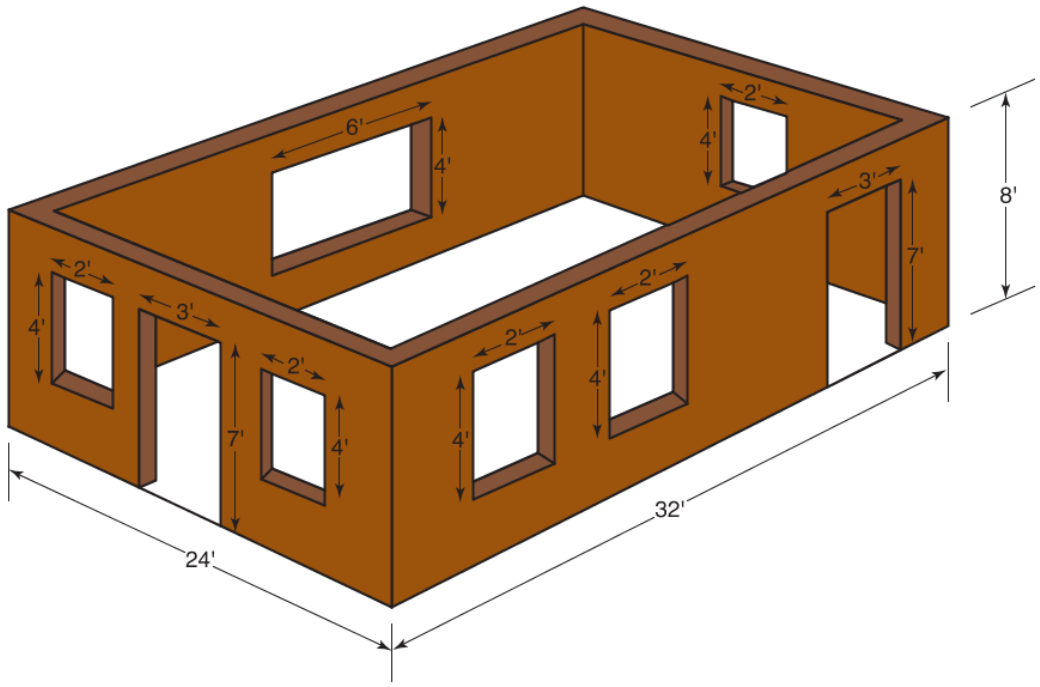

Goodheart-Willcox Publisher

Figure 37-10. Drawing of a one-story home showing wall, window, and door areas. The building is 32′ (9.8 m) long by 24′ (7.3 m) wide. The room height is 8′ (2.44 m). Five windows are 4′ (1.22 m) high by 2′ (0.61 m) wide. The two doors are each 7′ (2.13 m) high by 3′ (0.914 m) wide. The large window in the back of the house is 4′ (1.22 m) high by 6′ (1.83 m) wide.

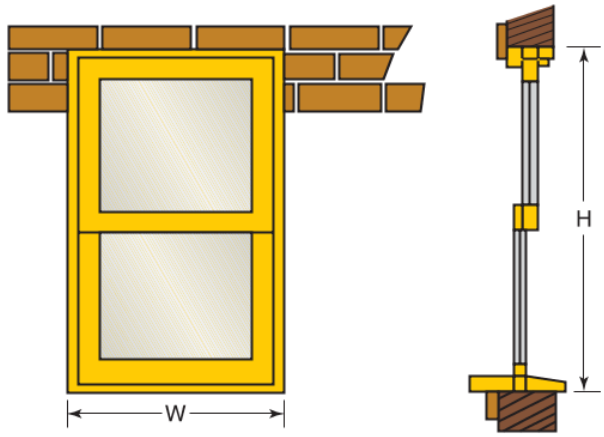

Goodheart-Willcox Publisher

Figure 37-11. A typical double-hung window. The window's width is measured from the outside edge of one side of the frame to the outside edge of the other side of the frame. The height of the window is measured from the top of the frame to the bottom of the windowsill.

An additional framed pane of glass may be attached to the outside of the window to provide additional insulation. This is called a storm window or storm sash.

The most energy-efficient type of window construction is the permanent double-pane or triple-pane. Two or three panes of glass with sealed air spaces between panes provide excellent insulation. These air spaces are dehydrated, evacuated, and then filled with nitrogen, argon, krypton, or some other dry gas to prevent sweating (condensation), **Figure 37-12**.

Windows are installed in a variety of ways. Some possibilities include:

- Fixed (picture windows).
- Single- or double-hung (where either one or both sashes move up and down).
- Sliding horizontal or casement (hinged on one side and open out with a crank mechanism).

The frame around windows may be made of wood or metal. Vinyl-clad aluminum frames are used to minimize frosting, as they add an additional layer of sealing. The R- and U-values of window pane assemblies are shown in **Figure 37-13**.

Doors

Doors are constructed in a variety of designs. They may be made of solid wood or of wood veneers over foam cores. Many energy efficient doors are constructed of a metal shell filled with insulation. Some doors have windows as part of their design. Large sliding glass doors are often called patio doors. They are responsible for as much as 20% of solar heating and

Copyright Goodheart-Willcox Co., Inc.

A

B

stocksolutions/Shutterstock.com; stocksolutions/Shutterstock.com

Figure 37-12. Window construction. A—Dry air fills the air space between panes in a sealed double-pane window. B—There are two air pockets in a sealed triple-pane window.

R- and U-Values of Windows		
Type Window	U	R
Single-glazed	1.04	0.96
Double-pane insulating glass	0.49	2.00
Triple-glazed	0.32	3.10

Andersen Corp.

Figure 37-13. The thermal resistance (R) and heat transfer coefficient (U) of various windowpane assemblies are specified.

heat leakage in some homes. The area used to calculate heat leakage for a door is the height of the door opening times the width of the door opening.

Calculating Net Wall Area

To compute the wall heat leakage area, add the area of the doors in the outside walls to the area of the windows. Then, subtract this amount from the total wall area.

Formula for calculating net wall area:

Net wall area = total wall area – combined area of windows and doors

Example:

Back in **Figure 37-10**, there are five windows measuring 2′ × 4′, two doors measuring 3′ × 7′, and one window measuring 6′ × 4′.

Area of windows = [(2′ × 4′) × 5] + (6′ × 4′)
= 64 ft²

Area of doors = (3′ × 7′) × 2
= 21 ft² × 2
= 42 ft²

Combined area of windows and doors = 106 ft²

The total wall area of the building shown in **Figure 37-10** is 896 ft². The net wall area is calculated by subtracting the door and window areas from the total wall area:

Net wall area = total wall area – combined area of windows and doors
= 896 ft² – 106 ft² = 790 ft²

The area of each window and door, as well as the net wall area, will be used later to find the building heat load.

Ceilings

Ceilings generally are made by fastening drywall to the ceiling joists. **Figure 37-14** shows several typical ceiling constructions. Heat leakage will be considerable if the joists do not have a floor over them. It will

Copyright Goodheart-Willcox Co., Inc.

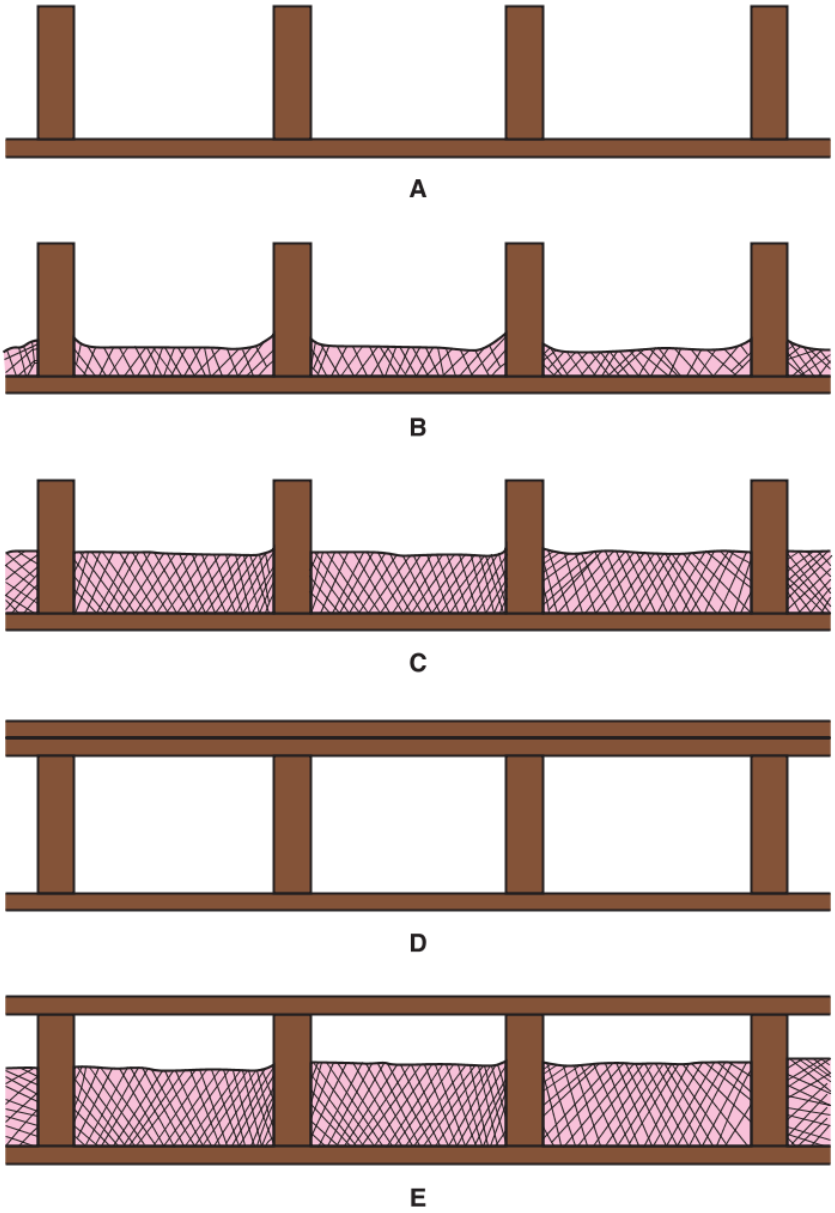

Goodheart-Willcox Publisher

Figure 37-14. Ceiling construction. A—No floor or insulation. B—No floor, 2″ insulation. C—No floor, 4″ insulation. D—Double floor, no insulation. E—Floor, 6″ insulation.

also be considerable if there is no insulation between the joists. See **Figure 37-6** for U-values for ceilings.

Formula for calculating area of ceiling:

Ceiling area = width of ceiling × length of ceiling

Example:

Using the sample house in **Figure 37-10**, the ceiling area is calculated as follows:

Ceiling area = 24′ × 32′ = 768 ft^2

Pro Tip

Ceilings

Most homes have an 8′ (2.4 m) ceiling height. A low ceiling helps to keep warm air closer to the occupied space, where it helps to keep conditions comfortable. However, some homes have 9′ (2.7 m) or 10′ (3.0 m) first floor ceilings. ACCA's Manual J lists different values for different types and heights of ceilings.

Copyright Goodheart-Willcox Co., Inc.

37.3.7 Heat Transfer Rate

The ***heat transfer rate*** is the amount of heat conducted through a structure for a given unit of time. It is usually represented by the letter Q and expressed in Btu/hr. The heat transfer rate can be calculated using the U-values or the R-values of the building components.

Using U-Values to Calculate Heat Transfer Rate

If the U-values of a component, the surface area of the component, and the temperature difference between the inside surface and outside surface of the component are known, the amount of heat transferred through the component over a given period can be calculated using the following formula:

Formula for calculating heat transfer rate using U-values:

$$Q = (U \times \text{area}) \times (T_o - T_i)$$

Q = heat transfer rate in Btu/hr
U = U-value of component
T_o = outside temperature in °F
T_i = inside temperature in °F

Example:

A structure has 790 ft² of wall surface. The temperature difference is 70°F. The wall is brick veneer with no insulation. It has a U-value of 0.25.

Solution:

This U-value means that 0.25 Btu will transfer through each square foot of wall for each one degree Fahrenheit temperature difference in one hour.

$$\begin{aligned} Q &= (0.25\ \text{Btu/ft}^2\cdot\text{°F·hr} \times 790\ \text{ft}^2) \times (70\text{°F} - 0\text{°F}) \\ &= 197.5\ \text{Btu/°F·hr} \times 70\text{°F} \\ &= 13{,}825\ \text{Btu/hr} \end{aligned}$$

Using R-Values to Calculate Heat Transfer Rate

In some cases, the construction of a wall may be unusual or customized, and a U-value for the complete component may not be available in reference charts. In these cases, it is possible to use the R-values or C-values of the building materials to calculate a U-value for the component. Then, the U-value can be used to find the heat transfer rate.

For a composite wall, the individual R-values for a composite wall can be totaled. The U-value will equal the reciprocal of the sum of the materials' resistances.

$$R_{\text{Total}} = R_1 + R_2 + R_3 + R_4 + R_5$$

$$U = \frac{1}{R_{\text{Total}}}$$

The R-values can be looked up in a table like the one shown in **Figure 37-15**.

Example:

For example, the R-values for the materials in a typical brick veneer wall are as follows:

Building Material	R-value
Outside air film	0.17
Face brick veneer (3″ thick)	0.39
Wood siding and building paper	0.86
Air space	0.97
3/8″ gypsum wallboard	0.32
Inside air film	0.68
Total R =	3.39

Once the thermal resistances of the individual materials are totaled, the reciprocal of the total yields the U-value for the wall:

$$\begin{aligned} U &= \frac{1}{R_{\text{Total}}} \\ &= \frac{1}{3.39} \\ &= 0.295\ \text{Btu/ft}^2\cdot\text{°F·hr} \end{aligned}$$

Then, the U-value can be used to calculate the heat transfer rate for the wall:

$$Q = (U \times \text{Area}) \times (T_o - T_i)$$

If the surface area of the wall is 790 ft² and the temperature difference is 70°F, as in previous examples, the heat transfer rate would be calculated as follows:

$$\begin{aligned} Q &= (0.295\ \text{Btu/ft}^2\cdot\text{°F·hr} \times 790\ \text{ft}^2) \times 70\text{°F} \\ &= 233.05\ \text{Btu/°F·hr} \times 70\text{°F} \\ &= 16{,}313\ \text{Btu/hr} \end{aligned}$$

R-Values of Building Materials

Construction	(R) Resistance Value
Surface (still air)	0.68
Air space	0.97
Gypsum wallboard 3/8″	0.32
Outside surface (15 mph wind)	0.17
Face brick	0.39
Concrete block 4″	1.11
Urethane insulation	9.1
Siding (wood) 1/2″ × 8″	0.85
Building paper	0.06
Wood sheathing	0.98
Wood floor 1″	0.98
Linoleum or tile	0.05
Asphalt shingles or plywood	0.95

Reprinted by permission of the American Society of Heating, Refrigerating, and Air-Conditioning Engineers, Atlanta, Georgia

Figure 37-15. This table lists typical thermal resistance (R) values for various parts of a building.

10

Copyright Goodheart-Willcox Co., Inc.

Using C-Values or K-Values to Calculate Heat Transfer Rate

In some cases, the R-values for some, or all, of the materials that compose the wall (or other building components) may not be listed on available charts. If a material's C-value or K-value is known, it can be used to determine the R-value. If the K-value is known, the R-value equals the reciprocal of the K-value multiplied by the thickness of the material:

$$R = \left(\frac{1}{K}\right) \times \text{thickness}$$

If a material's C-value is known, the R-value for the material is simply the reciprocal of the C-value:

$$R = \frac{1}{C}$$

For a composite wall (a typical building), the total R-value equals the sum of the individual reciprocals of the C-values of the materials used to construct the wall and the boundary air films:

$$R_{\text{Total}} = \frac{1}{C_1} + \frac{1}{C_2} + \frac{1}{C_3} + \frac{1}{C_4} + \frac{1}{C_5} + \frac{1}{C_6} \ldots$$

Example:

Going back to the composite wall that was described earlier, imagine that you are given the following values for the materials that make up the wall:

Building Material	Values
Outside air film	$R_1 = 0.17$ (found on chart)
Face brick veneer (3″ thick)	$C_2 = 2.56$ (provided by manufacturer)
Wood siding and building paper	$R_3 = 0.86$ (found on chart)
Air space	$R_4 = 0.97$ (found on chart)
3/8″ gypsum wallboard	$C_5 = 3.125$ (provided by manufacturer)
Inside air film	$R_6 = 0.68$ (found on chart)

The first step in calculating the heat transfer rate is to convert the different types of values into R-values and add them together:

$$\begin{aligned} R_{\text{Total}} &= R_1 + \left(\frac{1}{C_2}\right) + R_3 + R_4 + \left(\frac{1}{C_5}\right) + R_6 \\ &= 0.17 + \left(\frac{1}{2.56}\right) + 0.86 + 0.97 + \left(\frac{1}{3.125}\right) + 0.68 \\ &= 0.17 + 0.39 + 0.86 + 0.97 + 0.32 + 0.68 = 3.39 \end{aligned}$$

The next step is to find the U-value for the complete wall. The wall's U-value is simply the reciprocal of the combined R-values for the wall:

$$\begin{aligned} U &= \frac{1}{R_{\text{Total}}} \\ &= \frac{1}{3.39} \\ &= 0.295 \text{ Btu/hr·ft}^2\text{·°F} \end{aligned}$$

The final step in calculating heat transfer rate through the wall is to multiple the wall's U-value times the surface area of the wall and the temperature difference from one side of the wall to the other. For the purpose of this demonstration, we will use the familiar surface area of 790 ft² and temperature difference of 70°F:

$$\begin{aligned} Q &= (U \times \text{area}) \times (T_o - T_i) \\ &= (0.295 \text{ Btu/hr·ft}^2\text{·°F} \times 790 \text{ ft}^2) \times 70\text{°F} \\ &= (233.05 \text{ Btu/hr·°F}) \times 70\text{°F} \\ &= 16{,}313.5 \text{ Btu/hr} \end{aligned}$$

As you can see, the heat transfer rate that is calculated using the mix of R-values, a C-value, and a K-value is identical to the heat transfer rate calculated using just R-values. As long as you are aware of the relationships between these values, you can easily convert one type of a value to another type as needed.

37.3.8 Unit Conversions

To this point, all of the calculations in the chapter have been based on US Customary units. Specifically, thermal characteristics have been described using units of Btus, hours, feet, and degrees Fahrenheit. Watts are another type of US Customary (and SI) unit that are commonly used to measure and describe thermal characteristics. **Figure 37-16** shows typical heat leakage listed in watts per square foot (W/ft²), rather than the more familiar Btu/hr·ft² unit. To obtain the watt load per degree Fahrenheit, divide the "35" column by 35. To convert watts to Btu/hr, multiply watts by 3.414368.

Technicians should be aware that they may also encounter SI units from time to time, possibly in reference to the thermal characteristics of building materials or the airflow output of blowers. Technicians must be able to convert units as needed. A comparison of US Customary and SI values follows:

Characteristic being measured	Units	
	US Customary	SI
Specific heat at constant pressure	Btu/lb·°F	kj/kg·K
Heat conductance (C- and U-values)	Btu/hr·ft²·°F	W/m²·K
Heat conductivity (K-values)	Btu·in/hr·ft²·°F	W/m·K
Heat transfer rate	Btu/hr, watts (W)	J/sec, kcal/hr, watts (W)
Thermal resistance (R-value)	hr·ft²·°F/Btu	m²·K/W
Velocity	ft/min	m/s

Copyright Goodheart-Willcox Co., Inc.

Heat Loss—Watts/ft²								
Construction	Design Temperature Difference, °F							
	35	45	55	65	75	85	95	105
Exterior Walls								
Masonry (8″ concrete block)	3.60	4.63	5.66	6.68	7.71	8.74	9.77	10.80
Masonry (8″ concrete block; 1/2″ gypsum board)								
with R-7 (2 1/4″) Fiberglass	1.05	1.35	1.65	1.95	2.25	2.55	2.85	3.15
Brick Veneer (1/2″ gypsum sheathing, 1/2″ gypsum board)								
with R-11 (3 1/2″) fiberglass	0.75	0.97	1.18	1.39	1.61	1.82	2.04	2.25
with R-13 (3 5/8″) fiberglass	0.65	0.83	1.02	1.20	1.39	1.57	1.76	1.94
Frame (woodrock siding, 1/2″ gypsum sheathing, 1/2″ gypsum board)								
with R-11 (3 1/2″) fiberglass	0.85	1.09	1.33	1.58	1.82	2.06	2.30	2.54
with R-13 (3 5/8″) fiberglass	0.75	0.97	1.18	1.39	1.61	1.82	2.04	2.25
Frame (wood clapboard or shingles, plywood or wood fiber sheathing, 1/2″ gypsum board)								
with R-11 (3 1/2″) fiberglass	0.70	0.90	1.10	1.30	1.50	1.70	1.90	2.10
with R-13 (3 5/8″) fiberglass	0.60	0.77	0.94	1.11	1.28	1.45	1.62	1.79
Windows								
Single light	12.65	16.19	19.73	23.28	27.07	30.61	34.41	37.95
Double glazed	6.80	8.70	10.61	12.51	14.55	16.46	18.50	20.40
Single with storms	5.80	7.42	9.05	10.67	12.41	14.04	15.78	17.40
Doors								
Door only	5.10	6.53	7.96	9.38	10.91	12.34	13.87	15.30
with storm door	3.40	4.35	5.30	6.26	7.28	8.23	9.24	10.20
Floors								
Concrete slab no insulation	8.30	10.67	13.04	15.41	17.78	20.15	22.52	24.89
with R-7 (1″) Zer-O-Cel urethane perimeter (watts/linear ft/ exposed edge)	2.40	3.08	3.77	4.45	5.14	5.82	6.51	7.19
Wood (5/8″ plywood) over vented space								
with R-13 (3 5/8″) fiberglass	0.65	0.83	1.02	1.20	1.39	1.57	1.76	1.94
with R-19 (6″) fiberglass	0.50	0.64	0.78	0.93	1.07	1.21	1.35	1.49
Over unheated basement								
with R-7 (2 1/4″) fiberglass	0.95	1.22	1.49	1.76	2.03	2.30	2.57	2.84
with R-11 (3 1/2″) fiberglass	0.70	0.90	1.10	1.30	1.50	1.70	1.90	2.10

Goodheart-Willcox Publisher

Figure 37-16. Table listing heat leakage values in watts per square foot. The design temperature difference (DTD) is listed from 35°F (19°C) to 105°F (58°C). Note that every value in the last column is three times as much as the corresponding value in the first column. *(Continued)*

Copyright Goodheart-Willcox Co., Inc.

Ceilings								
with R-19 (6″) fiberglass	0.49	0.63	0.77	0.91	1.05	1.19	1.33	1.47
with R-22 (6 1/2″) fiberglass	0.45	0.58	0.70	0.83	0.96	1.09	1.22	1.34
Fireplaces (Watts)								
Tight damper	205	264	322	381	440	498	557	615
Average damper	510	657	803	949	1095	1241	1387	1533
Basement Wall, Above Grade*								
(U=0.10, 70°F basement)	1.02	1.31	1.60	1.89	2.18	2.47	2.76	3.05

Note: The below grade portion of a heated basement must be calculated separately since heat loss relates to ground or ground water temperature rather than air temperature. The U-value of 0.10 represents typical concrete construction with insulation and a furred finish wall. Add above-grade figure to below-grade figure for total basement heat loss.

*Below Grade

Heat Loss, Watts/Ft^2 (U=0.10, 70°F basement)

Ground Water Temperature, °F	Floor	Wall
40	0.879	1.758
50	0.586	1.172
60	0.293	0.586

Ground water temperature is available from the local weather bureau.

Goodheart-Willcox Publisher

Figure 37-16. Continued.

Heat leakage is calculated the same way whether SI or US Customary units are used in the calculations. Joules/second, kilocalories/hour, and watts are all common SI units used to express heat transfer. These values are used with square meter or square centimeter units of area in order to express heat transfer rates per unit of area. The watt unit is the most popular SI unit used to express heat transfer rates. The watt unit is included in both the US Customary and SI measuring systems. It can be easily applied to heating and cooling unit capacities.

To convert heat conductance values from US Customary to SI units, multiply the value given in Btu/hr·ft^2·°F by 5.674 to obtain an equivalent value in units of W/m^2·K. To change SI units to US Customary units, multiply the value given in W/m^2·K units by 0.1762 to obtain an equivalent value in Btu/hr·ft^2·°F units.

37.4 Other Factors Affecting Heat Loads

In addition to the heat transferred through the walls, doors, and windows of a building, there are other factors that can affect a building's heating and cooling loads. The following sections explain other factors that must be considered when calculating heating or cooling loads.

37.4.1 Basement Heat Loss

Heat losses or gains for basements vary widely. **Figure 37-17** shows the construction of a basement built five feet into the ground. The deeper the basement, the less the heat loss. It is usually assumed that a basement is at 60°F (16°C). Leakage through the basement floor is usually not calculated. It is assumed that the basement is not a conditioned space. The heat leakage to the outside walls is minimal.

However, if the basement is to be used as a living space, the overall area should be considered in sizing the heat load. The heat leakage load is calculated through the first floor of the above-ground structure (the basement ceiling). For basement living spaces, heat loss is calculated by using the appropriate U-value for the concrete floors and walls (this is usually around 0.10). The ground temperature is found from the local weather bureau and is often known as ground water temperatures. The total basement heat loss is the concrete and insulation U-values times the temperature difference between the basement and the ground times the area of basement floor and walls.

Basement walls are often tarred on the exterior and a layer of plastic sheeting is then applied to seal the walls from the soil. The plastic sheeting is known as a vapor barrier. Refer to the American Society of Heating, Refrigerating and Air-Conditioning Engineers' recommendations for

Copyright Goodheart-Willcox Co., Inc.

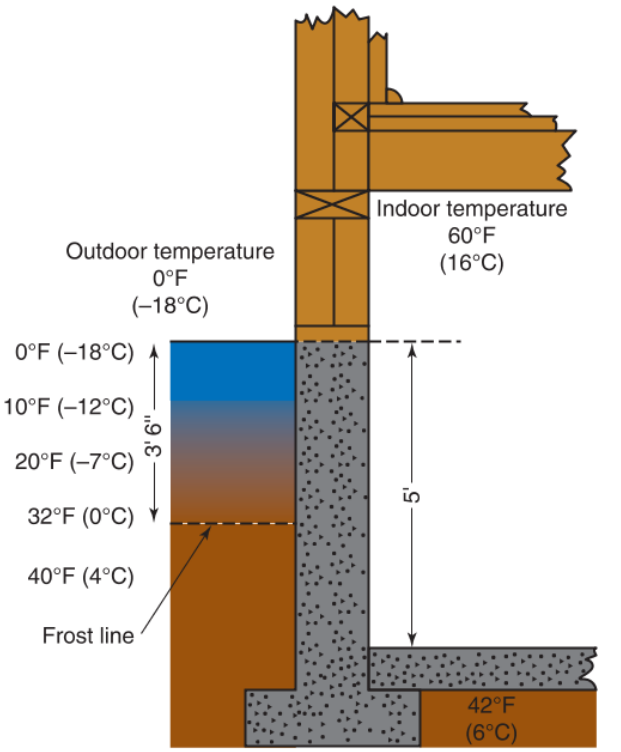

Goodheart-Willcox Publisher

Figure 37-17. The temperature conditions and construction of a building with a basement. The depth of the frost line will vary depending on the local climate.

additional data. The addition of vapor barrier provides a waterproof seal between the soil and the basement walls. It has negligible effect on the heat load but helps to seal the wall from moisture.

37.4.2 Slab-on-Grade Heat Loss

Buildings built on a concrete slab have different heat losses than those built with a basement. See **Figure 37-18**. Ice and frost may form around the outside of a slab building. Ice and frost formation at the base of the walls can act as a heat sink, which can speed up heat loss through the walls.

One method for minimizing frost and ice buildup is to install a rigid slab of urethane insulation parallel to the foundation walls. The insulation provides an extra thermal barrier, which helps the walls retain heat. This trapped heat prevents ice and frost from forming. The urethane slab should be at least 2″ thick and installed 2′ to 4′ in the ground. **Figure 37-19** shows a typical installation.

For a building on a slab, heat loss above ground is calculated as previously described. Heat losses due specifically to the slab construction are usually calculated as follows:

1. The perimeter of the building is determined.
2. The total length of the perimeter is multiplied by 18 Btu/hr for each foot of length (for an outdoor design temperature of 0°F [–18°C]).

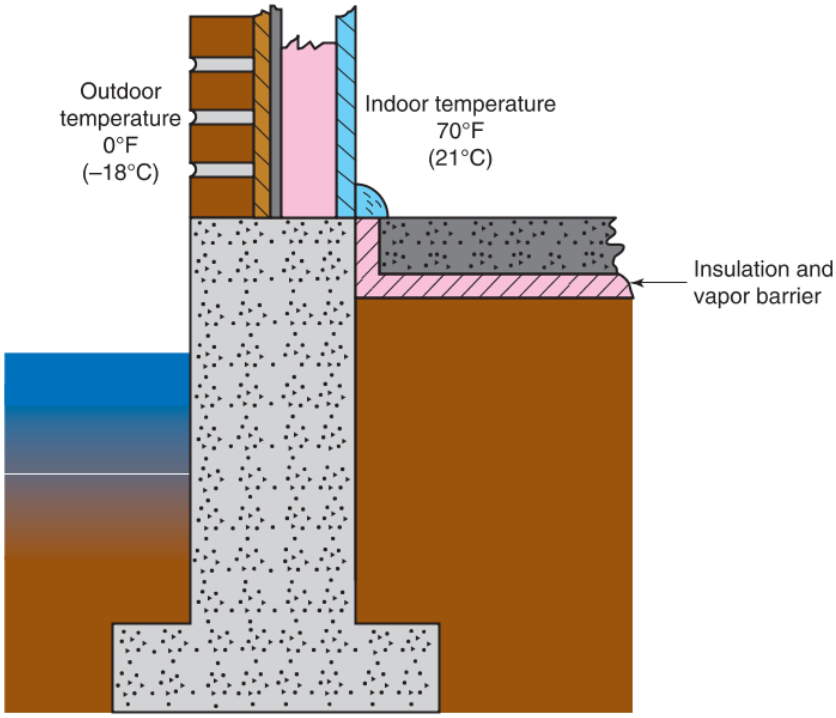

Goodheart-Willcox Publisher

Figure 37-18. Temperature conditions and construction of a building built on a concrete slab.

Copyright Goodheart-Willcox Co., Inc.

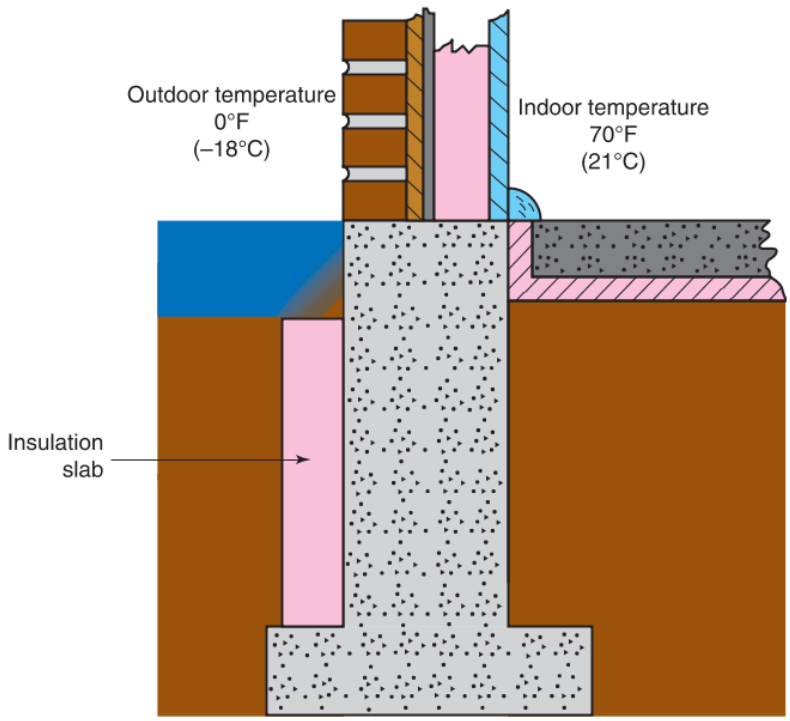

Goodheart-Willcox Publisher

Figure 37-19. A method is shown for preventing ice and frost from forming around perimeter of building built on slab. Rigid urethane insulation is installed as close to building as possible.

3. The heat losses due to slab construction are then added to the above ground heat losses.

37.4.3 Crawl Space Heat Loss

Another popular type of foundation leaves just enough space between the floor and the ground to allow access. This is referred to as a ***crawl space***. The earth floor of a crawl space should have a vapor barrier on it. This could be plastic sheeting, roofing paper, or other materials that prevent moisture from passing through. In addition, the floor can be insulated from underneath to provide maximum thermal protection. A crawl space must have sufficient venting to minimize moisture problems in the summer. The venting also minimizes the amount of cold air entering in the winter. Vents with dampers are installed to serve this dual purpose. The heat loss through a floor above a crawl space is calculated the same as that of an exterior wall, as the floor is exposed to outside air.

37.4.4 Infiltration and Exfiltration

Buildings are not airtight, and air will leak through openings if there is any difference between inside and outside air pressure. If the air pressure inside the building is lower than the air pressure outside the building, air will leak in, which is known as air *infiltration*. If the air pressure inside the building is greater than the air pressure outside the building, the air will leak out, which is known as air *exfiltration*. The air pressure difference is usually caused by wind. Parts of the building that the wind presses against are those through which air enters. The remaining areas are those through which the air escapes, **Figure 37-20**.

During the heating season, any cold air that enters a building must be heated. Air that leaks out represents lost heat. During the cooling season, warm air that enters a building must be cooled. Cooled air that leaks out is a heat gain (some cooling effect is lost). If the building can be sealed, infiltration and exfiltration can be minimized. However, care must be taken to provide enough fresh air for proper ventilation and operation of fuel-burning appliances (such as gas- or oil-fired furnaces, stovetops, water heaters, etc.).

One method for reducing infiltration and exfiltration is to wrap the entire structure in a thin protective sheet. This eliminates the normal gaps between building materials that occur during construction. **Figure 37-21** shows a typical building wrap product.

Copyright Goodheart-Willcox Co., Inc.

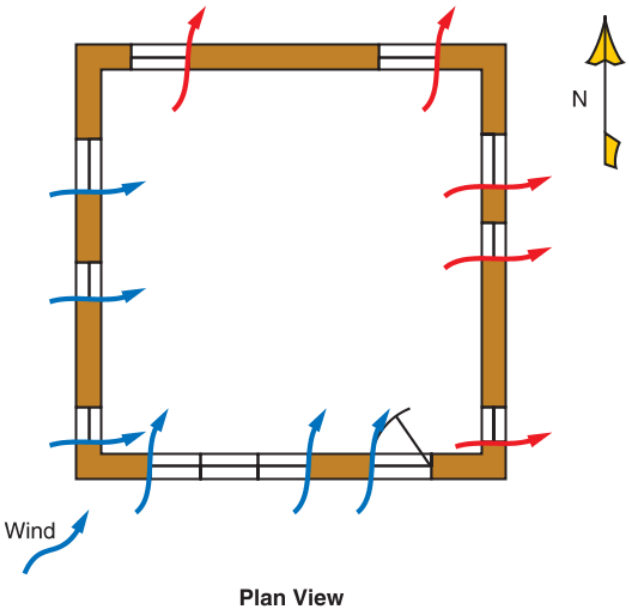

Goodheart-Willcox Publisher

Figure 37-20. Diagram showing how wind direction affects air leakage into and out of a house. Blue arrows indicate infiltration and red arrows indicate exfiltration.

Goodheart-Willcox Publisher

Figure 37-21. Building wrap can be used to reduce infiltration and exfiltration. The thin material is wrapped around exterior walls prior to applying the final siding of the building.

Pro Tip

Preventing Infiltration with Positive Pressure

One way to prevent unwanted infiltration is to maintain a positive air pressure within the building. The pressurized air will escape through cracks and openings in the building. With this practice, a special fresh air intake is needed. Incoming air can be conditioned before it is admitted to the building's conditioned space.

Infiltration calculations can be based on the total volume of the building, or they can be based on the length and size of all the cracks in the building. **Figure 37-22** provides rough estimates for the number of air changes in a space based on the percentage of wall area exposed to the outside environment. An exposed wall is any wall with an outside surface that serves as the building's exterior. The percentage of exposed wall in the room can be calculated by measuring the length of each wall in the room. The combined length of all of the exposed walls is then divided by the combined lengths of all of the walls in the room, both interior walls and exposed walls.

Caution

Air Change Tables

The table in **Figure 37-22** is for rough estimates only. ACCA Manual J has tables with greater detail, including different entries for different size spaces. The tables in Manual J also list different values for calculating heating and cooling loads, based on the seasonal changes in average wind strength. All final load calculations should be performed in accordance with local codes.

To find the volume of air replaced in an hour, multiply the number of air changes by the volume of the room. For example, a room with a volume of 1920 ft^3, will typically have at least 1920 ft^3 of fresh air infiltration per hour if one quarter of the room's wall area is exposed to the outside environment. If half of the wall area is exposed to the outside environment, the rate of air exchange increases to 2880 ft^3/hr. If three quarters or more of the wall area is exposed, the air exchange rate increases to 3840 ft^3/hr.

10

Estimated Air Changes—Loose Construction

Types of Space (Percentage of Wall Area Exposed to Outdoor Conditions)	Air Changes/Hr
25% of wall area exposed	1
50% of wall area exposed	1 1/2
75% of wall area exposed	2
>75% of wall area exposed	2
Entrances	2–3

Goodheart-Willcox Publisher

Figure 37-22. Chart listing the approximate number of air changes that typically take place per hour for various room exposures. The values are based on loose construction and can be reduced if the building has vapor barriers and better weather-stripping.

Copyright Goodheart-Willcox Co., Inc.

Once the volume of air infiltration is known, the actual heat loss or gain can be calculated. The amount of heat lost or gained is dependent on the temperature and humidity of the infiltrating air and the indoor design conditions. The temperature difference results in a loss or gain of sensible heat, and the difference in humidity results in loss or gain in latent heat. For heating load calculations, only the sensible heat loss is considered.

Formula for sensible heat loss or gain due to infiltration:

$$Q_s = 0.018 \times CFH \times TD$$

where

Q_s = sensible heat gain in Btu/hr
CFH = air exchange rate in ft^3/hr
TD = difference between outdoor and indoor design temperatures in °F

Example:

A room with a 150 ft^2 floor plan and 8′ ceiling has a volume of 1200 ft^3. Two sides are exposed, resulting in an estimated 1.5 air changes per hour. The indoor design temperature is 70°F (21°C) and the outdoor design temperature is 0°F (–18°C). The sensible heat loss due to infiltration is calculated as follows:

$$Q_s = 0.018 \times 1800\ ft^3/hr \times 70°F$$
$$= 2268\ Btu/hr$$

When cooling loads are calculated, both the latent and sensible heat gains due to infiltration must be considered.

Formula for latent heat gain due to infiltration:

$$Q_l = 0.01133 \times CFH \times \Delta W$$

where

Q_l = sensible heat gain in Btu/hr
CFH = air exchange rate in ft^3/hr
ΔW = difference in humidity of outdoor and indoor air in grains/lb

Example:

A room with a 150 ft^2 floor plan and 8′ ceiling has a volume of 1200 ft^3. Two sides are exposed, resulting in an estimated 1.5 air changes per hour. The design difference in grains of water to maintain 50% relative humidity is 49 grains/lb. The latent heat gain due to infiltration is calculated as follows:

$$Q_l = 0.01133 \times 1800\ ft_3/hr \times 49\ grains/lb$$
$$= 999.3\ Btu/hr$$

Thinking Green

Reducing Infiltration

The air change rate is reduced considerably if the building is constructed with vapor barriers. Fitting all doors and windows with weather-stripping will also reduce the air change rate. Thermal (infrared) scans of a building's exterior will show areas of heat leakage. Infiltration can be reduced by improving the insulation or weather stripping in these areas.

37.4.5 Sun Loads

Heat energy from the sun adds considerable heat load during the summer. In the northern hemisphere, the sun's rays shine on the east, south, and west walls. They also shine on those roof sections that are exposed to the sun. This is shown in **Figure 37-23**.

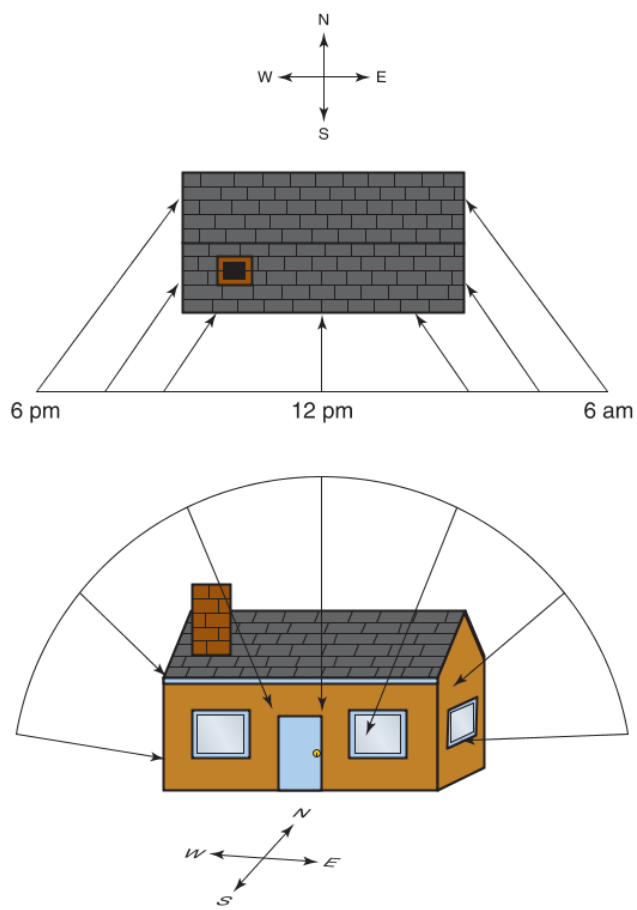

Goodheart-Willcox Publisher

Figure 37-23. The direction of the sun's rays and their impact on the walls of a building changes during each day. The sun's position over a 12-hour period is shown here.

Copyright Goodheart-Willcox Co., Inc.

When computing total heat load, heat from the sun must be considered based on the following conditions:

- On the east wall in the morning.
- On the south wall all day long.
- On the west wall in the afternoon.

In the northern hemisphere, a building's south wall receives sunlight the entire day. The east and west walls receive sunlight for a smaller period of time. However, during the periods of direct exposure, the east and west walls receive more sunlight than the south wall. In the morning, when the sun is in the east, a maximum amount of sunlight strikes the east wall. As the sun goes down, a maximum amount of sunlight strikes the west wall. As the sun rises in the east, passes overhead, and sets in the west, a relatively small amount of direct sunlight strikes the south wall at a highly acute angle.

From the middle of winter to the middle of summer, the sun's path gradually shifts to the north, and the days get longer. From the middle part of summer to the middle part of winter, the sun's path gradually shifts to the south and the days get shorter.

The sun releases different amounts of heat to surfaces, depending on the geographical region where the building is located. The approximate maximum heat gain from the sun is 330 Btu per hr per ft^2 (97 watts/ft^2 [1040 W/m^2]). This is for a black surface at right angles to the sun's rays, near the equator (tropic). Any other color surface at an angle to the sun's rays will receive less heat. At the 42nd parallel (a line going through New York City, Cleveland, and Salt Lake City), the maximum heat from the sun's rays is about 315 Btu per hr per ft^2 (92 watts/ft^2 [993 W/m^2]).

Much of the heat from the sun is reflected back into the atmosphere. **Figure 37-24** indicates the window heat gain for windows facing different directions. This is heat passing through the window *in addition to* the heat leakage through the window due to the temperature difference between the indoor and outdoor temperatures. In the summertime, this heat gain must be removed with air conditioning.

Unless windows are protected with awnings, use a temperature of 15°F (8°C) higher than outside ambient temperature when calculating the cooling load on a wall or window that faces south. The south facing windows and walls receive more direct sunlight during the day than the other three walls.

Approximate values obtained by using the 15°F (8°C) temperature correction generally are usable. However, there are many special cases that require careful study, such as buildings with a significant amount of windows and walls facing south in southern latitudes where the solar load may be extreme. Consider the changing position of the sun relative to the surfaces of the building when determining solar loads. Also consider the time lag required for this heat to reach the building's interior.

Effect of Sun on Windows	
Exposure	**Heat Absorption Btu/hr·ft**
Southwest	110
West	100
South	75
East	55
Single skylights	110
Double skylights	60
North	1
Northeast	2
Northwest	3

Goodheart-Willcox Publisher

Figure 37-24. Chart showing the heat absorbed during sunny conditions by windows that face different directions.

Reducing Window Heat Load for Cooling

There is considerable heat flow through ordinary window glass. It is approximately three times as great as flow through ordinary residential roofs and ceilings. Therefore, air conditioning areas containing a large amount of ordinary glass can become a problem. To reduce the heat conductivity through glass, a storm sash is used. To reduce the solar heat through glass, special types of glass with high heat-reflecting qualities can be used.

Special heat-absorbing glass can reduce the solar heat load by as much as 30%. A bluish gray tint can also reduce the amount of light passing through the glass, thereby reducing the cooling load. The ability for light rays to pass through is known as ***emissivity***. Windows with special coatings on the glass reduce the amount of solar radiation that passes through the window. Energy efficient, low-emissivity (low e) windows block much of the infrared and near-infrared light striking the glass, but allow visible light to pass. Since infrared and near-infrared light is deflected off the glass, it does not heat the interior of the building. Energy Star rated windows also may use double-pane and triple-pane glass with an inert gas such as argon between the layers of glass. One popular type of energy efficient windows is the triple-pane argon gas filled window. The gas between the panes creates a thermal barrier that reduces heat transfer through the window.

Copyright Goodheart-Willcox Co., Inc.

Safety Note

Low-Emissivity Windows

Since a low-emissivity window reflects infrared radiation, it can redirect radiant heat onto nearby objects. Care must be taken to ensure that low-emissivity windows do not inadvertently focus heat on neighboring structures that could be damaged or negatively affected.

Double-glazed windows reduce solar heat absorption by 15%. Roof extensions over a window will reduce the area exposed to the sun. Roof extensions or awnings that shade windows from direct exposure to the sun can reduce the heat load by 55%.

Thinking Green

Leadership in Energy and Environmental Design (LEED)

The US Green Building Council developed the *Leadership in Energy and Environmental Design* rating system to evaluate the environmental sustainability of buildings. The USGBC also certifies building trades workers based on their knowledge of the LEED rating criteria.

Heat Lag

Heat lag refers to the time it takes for heat to travel through a substance heated on one side. When the sun heats the outside wall of a building, several hours pass before the heat reaches the inner wall. In normal buildings, this time varies between three and four hours. With well-insulated or thick walls, the sun may have already set by the time the heat "soaks" through.

In the southwest, adobe walls are made quite thick. The heat from sunlight passes into the wall as the sun shines. However, the wall is thick enough to prevent the heat from reaching the interior during the daylight hours. During the night, when outdoor temperatures fall below those inside, some of the heat flow reverses itself and travels outward through the wall. If the room is cooler than the wall, heat from the wall is also transferred into the room. This heat lag helps keep the rooms warm even after the sun goes below the horizon and the outdoor temperature drops. See **Figure 37-25**.

Thinking Green

Heat Lag

Because of the effect of heat lag, it is more efficient to keep a building cool all day and run the air conditioning in the morning than to wait until midafternoon, when the thermal mass of the building has heated up. For split systems with an outdoor condensing unit, this also takes advantage of cooler outdoor temperatures that allow more heat to be rejected more easily than in the hotter midday and afternoon temperatures.

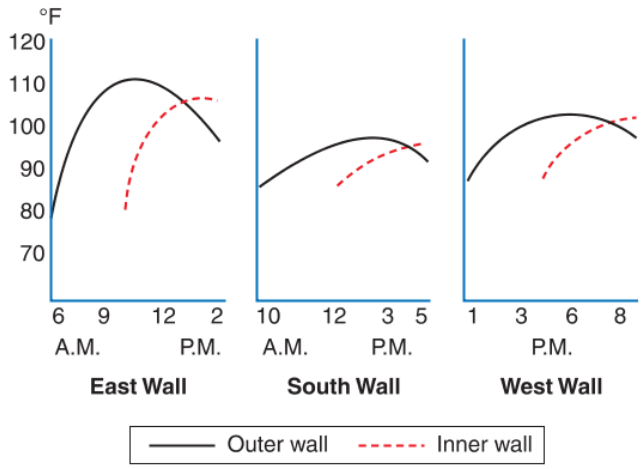

Goodheart-Willcox Publisher

Figure 37-25. These temperature/time graphs show the heat lag in various wall temperatures following exposure to the sun.

37.4.6 Heat Sources in Buildings

Heat sources may or may not be a benefit, depending on whether it is summer or winter. There are several sources of heat besides infiltration and sun load. All sources must be considered when figuring the comfort cooling load.

During the heating season, the heating system is aided by these other sources. Much of the energy expended in a building becomes heat. Yet, these sources are usually ignored when figuring heating loads of small buildings. These are small amounts compared to the total heat load in temperate zones.

However, when figuring cooling loads, all heat energy sources must be considered. This includes heat released by people, stoves, lights, and electric motors. **Figure 37-26** lists some of these heat sources. Notice that the two types of heat gain (sensible heat and latent heat) are itemized. Latent heat raises the relative humidity, while sensible heat raises temperature.

During the cooling season, the heat released by people must be taken into account. The sensible heat released by one person weighing about 150 lb (68 kg) is roughly 110 W (370 Btu/hr) when that person is at rest. It is about 440 W (1,500 Btu/hr) when that same person is working. An additional 40 W (140 Btu/hr) of latent heat is released from a person due to moisture evaporation from their respiratory system and skin. The total heat load of a person is a combination of the sensible heat and latent heat. For a person at rest, the total heat load is approximately 150 W (510 Btu/hr). For a person at work, the total heat load is approximately 480 W (1,640 Btu/hr).

Copyright Goodheart-Willcox Co., Inc.

Miscellaneous Heat Loads						
Energy Source	Device	Notes	Heat			
			Sensible		Latent	
			Btu/hr	Watts	Btu/hr	Watts
Electric	Lights	*per kw of output*	3415	1000		
	Electric motors	*per hp of output inside conditioned space:*				
		• Up to 1/2 hp	4200	1230		
		• Up to 3 hp	3700	1080		
		• Up to 20 hp	2950	860		
	Electric motors	*per hp of output outside conditioned space:*				
		• Up to 1/2 hp	1700	500		
		• Up to 3 hp	1150	340		
		• Up to 20 hp	400	120		
	Electric stoves	*per kw of output*	3415	1000		
Gas	Natural gas appliance	*per cubic foot of gas burned*	1100	320	300	90
	Artificial gas appliance	*per cubic foot of gas burned*	550	160	675	200
General	Heat from meals	*per meal*	36	10		
	Steam table	*per square foot of table surface*	400	120	800	230
People	Sitting		370	110	140	40
	Working		700–1500	200–440	140	40
	Exercising strenuously		2000	590	140	40

Goodheart-Willcox Publisher

Figure 37-26. Technicians use charts similar to this one to look up the heat released by various energy sources within a building.

37.5 Heating and Cooling Load—Manual J Method

Total heat load calculations are usually set up in table form. **Figure 37-27** shows an example of calculating heat loss due to thermal conduction for a 30′ × 60′, 1,800 ft² (9.14 m × 18.28 m, 167 m²) house. The individual heat loads are calculated and then added together to determine the total heat load.

Pro Tip

ACCA Manual J and N

Most national and local building codes require the use of the ACCA Manual J (residential) or Manual N (commercial) procedure for calculating building loads. This provides a common process so that heating and cooling loads are comparable from one building to another, **Figure 37-28**.

The Air Conditioning Contractors of America (ACCA) publishes standardized forms and software for calculating heating and cooling loads of buildings. The two basic ACCA workbooks for calculating heat loads are Manual J (residential) and Manual N (commercial buildings). ***Manual J*** includes reference tables with U-values and R-values for various building materials and construction methods. The building load may be calculated by hand on a paper spreadsheet, entered into an electronic spreadsheet, or input into a smartphone app. ACCA offers detailed training and certification in use of Manual J and Manual N procedures.

Manual J software requires looking up data in reference tables and inputting the specific building information into tabs in the spreadsheet for glass, doors, walls, ceilings, and floors. U-value is a measure of the amount of heat that will transfer through a specific material per degree of temperature difference. The heat transfer multiplier (HTM) is used to calculate heat transfer across a specific temperature difference:

$$U = \text{Btu/hr/°F}$$
$$HTM = U \times \Delta \text{ (temperature difference)}$$
$$HTM = \text{Btu/hr}$$

Copyright Goodheart-Willcox Co., Inc.

Heat Loss by Conduction					
Surface	Area	R	U	Temp. Diff °F	Heat Leakage Btu/hr
Wall Gross	1440	0.73	1.38		
Window	240	0.89	1.13	70	18984
Wall Net	1200	4.00	0.25	70	21000
Ceiling	1800	1.61	0.62	35	39060
Floor	1800	2.94	0.34	25	15300
Total Heat Loss by Conduction					94344

Goodheart-Willcox Publisher

Figure 37-27. Typical heat load calculation for 30′ × 60′ home having an 8′ ceiling height.

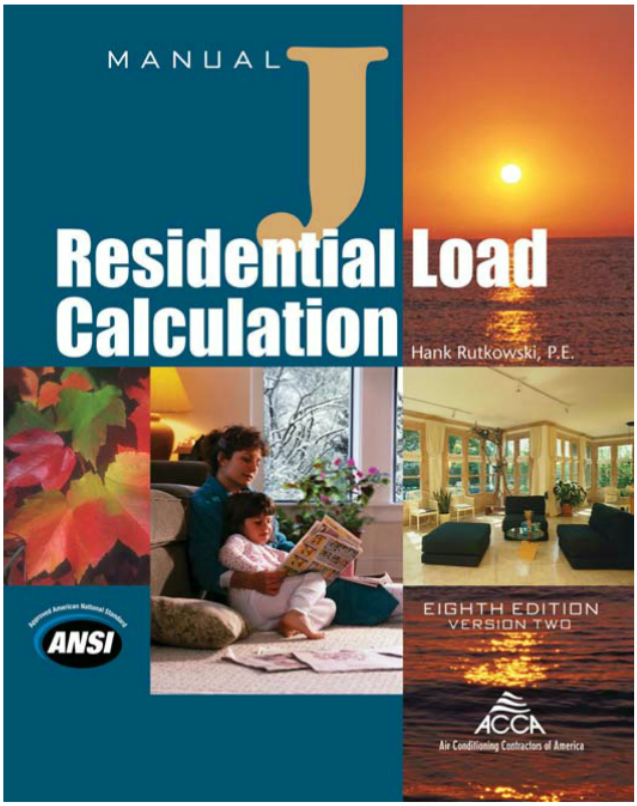

ACCA – The Indoor Environment & Energy Efficiency Association

Figure 37-28. ACCA Manual J contains procedures for determining HVAC equipment sizing loads for single-family detached homes, small multiunit structures, condominiums, town houses, and manufactured homes.

The U and HTM values for building materials are found in tables and appendices in the Manual J. Manual J includes the following tables:

- Tables 1A and 1B—outdoor design conditions for the United States and Canada.
- Table 2A—U-values for glass, windows, and skylights.
- Table 2B—U-values for energy efficient windows, doors, and skylights.
- Tables 3A through 3I—U-values for glass.
- Tables 4A through 4C—F-values for walls, doors, floors, and ceilings.
- Tables 5A through 5E—infiltration (air leakage).

The data input into each tab automatically calculates an HTM, which is shown on the summary sheet. The total load is added from each worksheet to provide the overall heat load for the building. **Figure 37-29** shows the ACCA Manual J summary sheet. These spreadsheets can serve as a template for the HVACR technician during the gathering of information required to make an accurate heating and cooling load estimate of a building.

37.5.1 Local Conditions

Manual J has many base assumptions such as type of building and climate. The first step in using Manual J is to populate the J1 spreadsheet to adjust to local conditions, such as location humidity, altitude, and climate. This information is looked up in Table 1A and 1B and input into Manual J Form J1. The outdoor conditions are input at the top of the spreadsheet for both heating and cooling seasons. These numbers generate an HTD (heating temperature difference) and a CTD (cooling temperature difference), **Figure 37-30**.

Copyright Goodheart-Willcox Co., Inc.

MANUAL $J8_{AE}$ • SUMMARY REPORT

Project	Long Residence		Mfg. Equipment Sensible Heat Ratio		0.75	ACCA Manual D CFM
			Manual Overide Entry for Design CFM			
Room Name		HEAT LOSS	HTG CFM	HEAT GAIN	CLG CFM	
Dining		3295	81	895	54	81
Living		4274	106	2780	166	166
Front Hall		1497	37	565	34	37
Bed Room 1		4246	105	2269	136	136
Bath 2		805	20	278	17	20
Bed Room 2		3559	88	1783	107	107
Bed Room 3		2044	51	1518	91	91
Bath 1		1421	35	686	41	41
Kitchen		1780	44	1934	116	116
Laundry		2184	54	1102	66	66
Hall & Closets		606	15	424	25	25
Rec Room		8253	204	1986	119	204
Work Shop		3408	84	244	15	84
Utility		3080	76	245	15	76
Room Envelope Totals		40453	1000	16708	1000	

Total Area	Construction Components	HEAT LOSS		HEAT GAIN	
185	Windows & Glass Doors	8314	20.55%	5962	33.11%
	Skylights				
38	Wood & Metal Doors	998	2.47%	346	1.92%
1537	Above Grade Walls	12320	30.46%	1730	9.61%
232	Partition Walls	557	1.38%		
800	Below Grade Walls	4290	10.60%		
1479	Ceilings	5435	13.44%	3624	20.13%
	Partition Ceilings				
	Passive Floors				
	Exposed Floors				
	Slab Floors				
1479	Basement Floors	2440	6.03%		
	Partition Floors				
	Infiltration	6099	15.08%	569	3.16%
	Internal Gains			3320	18.44%
	Duct Loss & Gain			747	4.15%
	Ventilation				
	Blower Heat Gain			1707	9.48%
	Total Sensible	40453	100.00%	18004	100.00%
	Total Latent			1805	
	Total Cooling Load			19809	

Total heating load

Total cooling load

ACCA – The Indoor Environment & Energy Efficiency Association

Figure 37-29. ACCA Manual J summary sheet.

10

Copyright Goodheart-Willcox Co., Inc.

Load conditions from Tables 1A and 1B

HTD and CTD

FORM J1AE • ABRIDGED VERSION of MANUAL J, 8TH EDITION										
Project		Long Residence	Design State & City		Iowa	Cedar Rapids AP				
Indoor Design Heating db		70	@ Outdoor (Winter) 99% db		-5	HTD	75			
Indoor Design Cooling db		75	@ Outdoor (Summer) 1% db		89	CTD	14			
Indoor Design Cooling RH		50%	Grains Difference		40	Daily Range	Medium			
Latitude		41	Elevation		863	ACF	0.978		Block Load	
		Glass Direction	Construction Detail			Heating HTM	Cooling HTM	Net Area	Heating BTUH	Cooling BTUH
6A	Windows & Glass Doors	N	1E-cw,Clear, Double Pane, Fixed Sash, Wood			42.00	13.00	20	840	260
		E/W	1D-cw, Clear, Double Pane, Operable,Wood			42.75	38.70	11	470	426
		E/W	1D-cw, Clear, Double Pane, Operable,Wood			42.75	38.70	8	342	310

ACCA – The Indoor Environment & Energy Efficiency Association

Figure 37-30. Manual J spreadsheet showing heating temperature difference (HTD) and cooling temperature difference (CTD).

37.5.2 Glass Loads

Windows, skylights, and doors are a significant source of heat loss and heat gain. Construction of each window, number of panes, type of glazing, and frame construction all contribute to the heat loss and heat gain of a door or window. Any opening in a building is known as fenestration. Manual J refers to windows as such. Windows and doors are rated by the National Fenestration Rating Council (NFRC) as to their ability to allow light transfer.

Table 2A is used to gather U-value heat loss for windows, skylights, and glass door walls. The type of window (fixed or sliding sash, single or double pane, bay or garden, low-e) is used to find the U-value specific for each window or glass door. The U-values from Tables 2A and 2B are then multiplied by the temperature difference to calculate the HTM for each piece of glass, **Figure 37-31**.

Table 2A/3A -- Construction Numbers 1 through 7 & 10 -- Vertical Glass Heat Loss	Heating	Cooling HTM				
Enter Construction Number, Glass Type, # Panes, Sash Type, Frame Type, Shading	U-Value	N	NE/NW	E/W	SE/SW	S
1E-cw,Clear, Double Pane, Fixed Sash, Wood	0.560	13	30	43	37	21
1D-cw, Clear, Double Pane, Operable,Wood	0.570	13	30	43	37	21
1C-cm,Clear, Single Pane / Storm, Operable, Metal No Break	0.870	13	30	43	37	21
1C-cm,Clear, Single Pane / Storm, Operable, Metal No Break	0.870					

Table 2A/3A -- Construction Numbers 8 & 9 -- Skylight Heat Loss	Heating	Cooling HTM				
Enter Construction Number, Glass Type, # Panes, Sash Type	U-Value	N	NE/NW	E/W	SE/SW	S

Population Instructions for Windows, Glass Doors and Skylights

1) Input values are entered in the white cells (as requested by column headings; notes provide additional guidance).
2) Input values for windows and glass doors are extracted from Table 2A and Table 3A in the printed MJ8ae book; Table 3C applies to skylights.
3) Begin with Table 2A (the construction number applies to heating and cooling, the U-value applies to heating).
 * Construction attributes are extracted from plans or by site inspection.
 * The construction number and U-value are extracted from Table 2A.
 * Input values from Table 2A or Appendix 10 of the unabridged version of ***Manual J*** are valid entries.
 * You can enter up to 8 different vertical glass types for heat loss
 * For example

Construction Number; Glass Type; Number of Panes; Type of Sash; Type of Frame	U-Value
1C-cm, Clear, Single Pane / Storm, Operable, Metal no Break	0.870

 * You can enter up to 5 different skylight types for heat loss
 * For example

Construction Number; Glass Type; Number of Panes; Type of Sash	U-Value
8Bc-4, Flat Clear, Double Pane, Wood	0.940

4) Refer to Table 3A for cooling HTM values for windows and glass doors.

ACCA – The Indoor Environment & Energy Efficiency Association

Figure 37-31. Manual J Table 2A provides U-values for glass.

Copyright Goodheart-Willcox Co., Inc.

Tables 3A through 3I include HTM values for windows, skylights, and glass door walls and take into consideration the amount of shading that the glass receives. Table 3A assumes no shade on the window. See **Figure 37-32**. Table 3B assumes that there is some type of overhang or awning that shelters the window from direct sunlight.

37.5.3 Wall, Floor, Door, and Ceiling Loads

Walls, doors, floors and ceilings are all non-fenestration parts of a building. Sunlight does not pass through them. **Figure 37-33** shows Table 4A, which has U-values for various types of doors and walls.

Table 3A
Default Cooling HTM for Generic Windows and Glass Doors
No External Sun Screen, Clear Glass

Cooling Load (Btuh) = HTM × Reference Area
Bay Window HTM = 1.15 × Table HTM
Garden Window HTM = 2.00 × Table HTM
French Door HTM = 0.70 × Table HTM
Use Single Pane, Clear Glass for Jalousie Window

Recommended Adjustments

1) Full outdoor insect screen = 0.80 × Table HTM
Half outdoor insect screen = 0.90 × Table HTM
Full indoor insect screen = 0.90 × Table HTM
Half indoor insect screen = 0.95 × Table HTM
2) Shade by external overhang (See Table 3E-1)

Default indoor design temperature = 75°F.
Outdoor design temperature provided by Table 1.
Load area appears above HTM values.
Table note 2 (after Table 3E-5) specifies the order of application of the HTM adjustment procedures.

Optional Adjustments

1) See Table 3E-3 for foreground reflectance adjustment.
2) 40° North latitude, see Table 3E-2 for latitude adjustment.
3) Medium color blind, drape or roller shade. See Table 3E-4 for light or dark color adjustment.

Table 3A-1 — Clear Glass

No Internal Shade																		
Default Assembly Performance	Single Pane						Double Pane						Triple Pane or Double Pane Low-e					
	U-Value		SC		SHGC		U-Value		SC		SHGC		U-Value		SC		SHGC	
	0.98		0.85		0.74		0.56		0.75		0.65		0.42		0.70		0.61	
Design CTD	10	15	20	25	30	35	10	15	20	25	30	35	10	15	20	25	30	35
Exposure	HTM for Rough Opening						HTM for Rough Opening						HTM for Rough Opening					
North	24	29	34	39	44	49	18	21	24	27	29	32	16	18	20	22	24	26
NE or NW	56	61	66	70	75	80	46	49	52	55	57	60	42	44	46	48	50	53
East or West	80	84	89	94	99	104	67	70	73	76	78	81	62	64	66	68	70	72
SE or SW	68	73	78	83	88	93	57	60	63	65	68	71	52	54	56	59	61	63
South	40	45	50	55	60	65	32	35	38	41	44	46	29	31	33	36	38	40
Vertical or Horizontal Blinds with Slats At 45 Degrees																		
Default Assembly Performance	Single Pane						Double Pane						Triple Pane or Double Pane Low-e					
	U-Value		SC		SHGC		U-Value		SC		SHGC		U-Value		SC		SHGC	
	0.98		0.60		0.52		0.56		0.50		0.44		0.42		0.45		0.39	
Design CTD	10	15	20	25	30	35	10	15	20	25	30	35	10	15	20	25	30	35
Exposure	HTM for Rough Opening						HTM for Rough Opening						HTM for Rough Opening					
North	16	21	26	31	35	40	11	13	16	19	22	25	9	11	13	15	17	19
NE or NW	36	41	46	50	55	60	27	30	33	36	38	41	24	26	28	30	32	34
East or West	51	56	61	66	71	76	40	43	46	49	51	54	35	37	40	42	44	46
SE or SW	44	49	54	59	64	68	34	37	40	42	45	48	30	32	34	36	38	40
South	25	30	35	40	45	49	18	21	24	27	29	32	16	18	20	22	24	26

ACCA – The Indoor Environment & Energy Efficiency Association

Figure 37-32. Manual J Table 3A provides HTM values for glass with shading.

Copyright Goodheart-Willcox Co., Inc.

Table 4A
Heating and Cooling Performance for Opaque Panels
U-Values and Group Numbers or CLTD Values

Heating Application

Heating Load HTM = U-Value x (Indoor Design Temperature - Outdoor Design Temperature)

Heating Load (Btuh) = HTM x Reference Area

Default indoor design temperature = 70 °F.
Outdoor design temperature provided by Table 1.
Reference area provided with Construction Number.

Cooling Application

Cooling HTM = U-Value x Table 4B CLTD Value

Cooling Load (Btuh) = HTM x Reference Area

Default indoor design temperature = 75 °F.

Outdoor design temperature and daily range provided by Table 1.
Design Temperature Difference = Outdoor Design Temperature - Indoor Design Temperature
Use the CLTD provided by Table 4A or use the Table 4A group number and the Table 4B CLTD.
Reference area provided with Construction Number.

Construction Number 11
Wood and Metal Doors
Reference Area = Area of Rough Opening (SqFt)

Wood Door		U-Value	CLTD Values Medium Color Wood or Metal Doors											
A.	Hollow Core	0.47												
B.	Hollow Core with Wood Storm	0.30												
C.	Hollow Core with Metal Storm	0.32	10		15			20			25		30	35
D.	Solid Core	0.39	L	M	L	M	H	L	M	H	M	H	H	H
E.	Solid Core with Wood Storm	0.26	25.0	21.0	30.0	26.0	21.0	35.0	31.0	26.0	36.0	31.0	36.0	41.0
F.	Solid Core with Metal Storm	0.28												
G.	Panel	0.54												
H.	Panel with Wood Storm	0.32												
I.	Panel with Metal Storm	0.36												
Metal Door		**U-Value**												
J.	Fiberglass Core	0.60												
K.	Fiberglass Core with Storm	0.36	Wood and metal doors do not have a group number.											
L.	Paper Honeycomb Core	0.56												
M.	Paper Honeycomb Core, with Storm	0.34												
N.	Polystyrene Core	0.35												
O.	Polystyrene Core with Storm	0.21												
P.	Polyurethane Core	0.29												
Q.	Polyurethane Core with Storm	0.17												

ACCA – The Indoor Environment & Energy Efficiency Association

Figure 37-33. Manual J Table 4A provides U-values for doors and walls.

Doors are categorized by type of outside construction (metal or wood) and their type of core (such as fiberglass, solid, hollow, or paper). The U-values for each door, wall, ceiling, and floor are input into Manual J1 and the HTM is calculated as shown in **Figure 37-34**.

37.5.4 Field Measurements

The next step is to review the blueprints of the residence (if available) or to field measure each room of the house, noting the location of each door, window, and type of construction. Each room is given a name, such as living room or dining room. The area of doors, windows, walls, and ceilings are input into the J1 spreadsheet. See **Figure 37-35**.

Copyright Goodheart-Willcox Co., Inc.

Type of door, wall, ceiling, or floor

Calculated HTMs

FORM J1$_{AE}$ • ABRIDGED VERSION of MANUAL J, 8TH EDITION										
Project	Long Residence		Design State & City	Iowa	Cedar Rapids AP					
Indoor Design Heating db		70	@ Outdoor (Winter) 99% db	-5		HTD	75			
Indoor Design Cooling db		75	@ Outdoor (Summer) 1% db	89		CTD	14			
Indoor Design Cooling RH		50%	Grains Difference	40		Daily Range	Medium			
Latitude		41	Elevation	863		ACF	0.978		Block Load	
	Glass Direction		Construction Detail		Heating HTM	Cooling HTM	Net Area		Heating BTUH	Cooling BTUH
7	Wood & Metal Doors	a	11N, Metal, Polystyrene Core		26.25	9.10	17		446	155
		b	11N, Metal, Polystyrene Core		26.25	9.10	21		551	191
		c								
8	Above Grade Walls	a	12B-0bw, Frame, R11, wood sheathing, brick		7.28	1.23	1077		7835	1327
		b	15A-6sfoc, open Core Block, R6 boad		9.75	1.73	233		2272	403
		c	15A-6sfoc, open Core Block, R6 boad		9.75	1.73	227		2213	
		d								
		e								
	Partition Walls	f	12A-0sw, frame, R0, Wood Sheathing		2.40		232		557	
		g								
9	Below Grade Walls	a	15A-6sfoc5, Open Core block, R6 Board, 5 ft. Below Grade		5.36		800		4290	
		b								
10	Ceilings	a	16B-19ad;FHA Vented Attic; R-19; Asphalt Shingles; Dark		3.68	2.45	1479		5435	3624

ACCA – The Indoor Environment & Energy Efficiency Association

Figure 37-34. Manual J Sheet J1 calculation of HTM from U-values derived from Table 4A for doors, walls, ceilings, and floors.

Each room is listed

Room-->	Bed Room 1		Room-->	Bath 2		Room-->	Bed Room 2		Room-->	Bed Room 3	
Net Area	BTUH Heating	BTUH Cooling	Net Area	BTUH Heating	BTUH Cooling	Net Area	BTUH Heating	BTUH Cooling	Net Area	BTUH Heating	BTUH Cooling
									22	941	851
						17	727	658			
11	470	208				11	470	208			
			8	342	151						
17	727	658									

Each row is a different type of window, door, or wall construction and orientation found in the residence

Area of window

Heating and cooling loads based on window specification and area

ACCA – The Indoor Environment & Energy Efficiency Association

Figure 37-35. Room descriptions, net area of glass, walls, ceilings, floors are input in rows corresponding to the type of window, wall, or door.

10

Copyright Goodheart-Willcox Co., Inc.

37.5.5 Air Leakage

Air leakage through a building causes the volume of air within a house to change over time. Unintentional air leakage is known as infiltration. One air change occurs when the entire volume of air contained within a residence is replaced by fresh outside air. Infiltration is measured in air changes per hour (ACH). Air changes assume that wind blowing by the building and leaks in the construction of the house allow the air inside the house to escape to the outdoors. It is usually higher in the winter as there is a greater temperature difference between the inside and outside of the house and higher winds in the winter. Tables 5A through 5E contain estimated air changes per hour for typical types of construction.

Tables 5A and 5B are the simplest form for basic designs and are suitable for most residential load calculations. **Figure 37-36** shows Table 5A, which rates buildings as tight, semi-tight, average, semi-loose, or loose. Most quality constructed buildings can be rated as average. If the house was built with building wrap and good caulking around all openings, it could be rated as tight. A leaky house would be an older construction where minimal effort had been made to seal the residence to outside air. The infiltration loss is then multiplied by total building area and temperature difference to yield an infiltration load in Btu/hr.

37.5.6 Ducts, Appliances, and Miscellaneous Loads

In addition to heat losses due to fenestration and infiltration, there are significant sources of heat gain and loss inside a building. If a supply duct is located in an unconditioned space, such as many attics, it will gain heat during the summer and lose heat during the winter. If return ducts are located on an outside wall, it will increase the heat load for the HVAC system.

For residential heat load calculations, the basic items mentioned above are usually sufficient to calculate the heating and cooling loads for an average house. However, appliances, occupants, and lighting all contribute to the total heating and cooling loads. There are a number of additional tables and spreadsheets used to account for these loads. For example, if a residence has more than two people living in each room, these people should be accounted for. If the home has a significant amount of lights or heavy use of appliances, it may require further study.

37.5.7 Total Load

The Manual J summary sheet as shown in **Figure 37-37** includes several totals:

- Total heat loss.
- Sensible heat gain.
- Latent heat gain.
- Total cooling load.

The ***total heat loss*** is the amount of heat required to be added to the building in Btu/hr for cold weather heating. The ***total cooling load*** is a combination of sensible and latent heat gain required to be removed from a building for hot weather cooling. These numbers are used to size the equipment to be installed or retrofit into an existing house.

Thinking Green

Efficient Sizing of Equipment

The past practice of "ballpark" sizing of HVACR equipment is inaccurate and inefficient. When selecting new or replacement equipment, elect to use a two-stage furnace, variable-speed compressor, and an air handler with a blower that uses an ECM. These newer technologies provide energy efficiencies over older equipment that was traditionally oversized. The accurate assessment of heating and cooling loads allow the HVACR technician to select equipment that meets the duty cycle of a residence for maximum comfort.

37.6 Software and Apps for Load Calculations

As stated earlier, many municipal codes require the use of an ACCA Manual J method of calculating heating and cooling loads. This means that the Manual J methodology should be followed. However, the HVACR technician is not required to use the specific ACCA programs.

ACCA has a list of approved software companies that utilize the Manual J method. There are companies that provide load calculation services. The HVACR contractor provides the detailed building information to the company. The company generates a report that includes duct sizing, layout, and equipment selection.

Many HVACR technicians seldom do in-depth load calculations. This is usually performed by a technician or contractor who performs this service full time. However, the use of ACCA programs and mobile device apps has made performing load calculations much easier. Some apps require minimal input from the user to produce a load calculation report.

Copyright Goodheart-Willcox Co., Inc.

Table 5A
Infiltration Air Change Values for Three or Four Exposures

Default Air Change Values for Single Story Construction

Construction	Air Changes per Hour — Heating					Infiltration [1] Cfm for One Fireplace
	Floor Area of Heated Space (SqFt)					
	900 Or Less	901 to 1500	1501 to 2000	2001 to 3000	3001 or More	
Tight	0.21	0.16	0.14	0.11	0.10	0
Semi-Tight	0.41	0.31	0.26	0.22	0.19	13
Average	0.61	0.45	0.38	0.32	0.28	20
Semi-Loose	0.95	0.70	0.59	0.49	0.43	27
Loose	1.29	0.94	0.80	0.66	0.58	33

1) For one additional fireplace, add 7 CFM to the above fireplace values. For two or more additional fireplaces, add 10 CFM (total) to the above.

Construction	Air Changes per Hour — Cooling					Fireplace Infiltration Cfm
	Floor Area of Air Conditioned Space (SqFt)					
	900 Or Less	901 to 1500	1501 to 2000	2001 to 3000	More than 3000	
Tight	0.11	0.08	0.07	0.06	0.05	
Semi-Tight	0.22	0.16	0.14	0.11	0.10	
Average	0.32	0.23	0.20	0.16	0.15	0
Semi-Loose	0.50	0.36	0.31	0.25	0.23	
Loose	0.67	0.49	0.42	0.34	0.30	

Default Air Change Values for Two Story Construction

Construction	Air Changes per Hour — Heating					Infiltration [1] Cfm for One Fireplace
	Floor Area of Heated Space (SqFt)					
	900 Or Less	901 to 1500	1501 to 2000	2001 to 3000	3001 or More	
Tight	0.27	0.20	0.18	0.15	0.13	0
Semi-Tight	0.53	0.39	0.34	0.28	0.25	13
Average	0.79	0.58	0.50	0.41	0.37	20
Semi-Loose	1.23	0.90	0.77	0.63	0.56	27
Loose	1.67	1.22	1.04	0.85	0.75	33

1) For one additional fireplace, add 7 CFM to the above fireplace values. For two or more additional fireplaces, add 10 CFM (total) to the above.

Construction	Air Changes per Hour — Cooling					Fireplace Infiltration Cfm
	Floor Area of Air Conditioned Space (SqFt)					
	900 Or Less	901 to 1500	1501 to 2000	2001 to 3000	More than 3000	
Tight	0.14	0.11	0.09	0.08	0.07	
Semi-Tight	0.28	0.21	0.18	0.15	0.13	
Average	0.41	0.30	0.26	0.21	0.19	0
Semi-Loose	0.64	0.47	0.40	0.33	0.29	
Loose	0.87	0.64	0.54	0.44	0.39	

ACCA – The Indoor Environment & Energy Efficiency Association

Figure 37-36. Manual J Table 5A shows values for air changes per hour for heating and cooling seasons.

Copyright Goodheart-Willcox Co., Inc.

Total Area	Construction Components	HEAT LOSS		HEAT GAIN	
185	Windows & Glass Doors	8314	20.55%	5962	33.11%
	Skylights				
38	Wood & Metal Doors	998	2.47%	346	1.92%
1537	Above Grade Walls	12320	30.46%	1730	9.61%
232	Partition Walls	557	1.38%		
800	Below Grade Walls	4290	10.60%		
1479	Ceilings	5435	13.44%	3624	20.13%
	Partition Ceilings				
	Passive Floors				
	Exposed Floors				
	Slab Floors				
1479	Basement Floors	2440	6.03%		
	Partition Floors				
	Infiltration	6099	15.08%	569	3.16%
	Internal Gains			3320	18.44%
	Duct Loss & Gain			747	4.15%
	Ventilation				
	Blower Heat Gain			1707	9.48%
	Total Sensible	40453	100.00%	18004	100.00%
	Total Latent			1805	
	Total Cooling Load			19809	

Total heat loss

Sensible heat gain

Total cooling load

Latent heat gain

ACCA – The Indoor Environment & Energy Efficiency Association

Figure 37-37. Manual J summary showing various total values.

Copyright Goodheart-Willcox Co., Inc.

Chapter Review

Summary

- In summer, heat from outdoors enters a building. This is referred to as heat gain. In the winter, heat from indoors transfers to outdoors. This is referred to as heat loss.
- A building's heat loads include heat transferred through walls, ceilings, floors, and windows; latent heat in water vapor; heat gains and losses due to infiltration and ventilation; heat from sunshine; and heat from appliances and occupants.
- Heat loads considered for calculating heating loads include heat lost through conduction through walls, ceilings, and floors; heat lost due to exfiltration and infiltration; and heat lost due to combustion air being drawn from the conditioned space.
- Cooling loads include all of the heat loads used to calculate heating loads, plus additional miscellaneous heat loads. These miscellaneous heat loads include heat from the sun, heat from appliances and lights, and heat from the building's occupants.
- Heat leakage refers to heat conducted through walls, ceilings, and floors due to a temperature difference between indoor and outdoor air.
- A material's K-value is a measure of its thermal conductivity. It indicates how much heat will transfer through one square foot of the material one inch thick in one hour when there is a 1°F temperature difference between the two sides of the material. A material's thermal conductance, or C-value, is similar to its K-value, but is not dependent on the thickness of the material.
- A material's R-value is a measure of its thermal resistance. It is the reciprocal of the material's K-value. The higher the material's R-value, the slower heat will transfer through the material.
- The U-value of a building component is a measure of its thermal transmittance. It is similar to a component's C-value, but it takes into account the insulating effect of boundary air films.
- The temperature difference between indoor design temperature and outdoor design temperature is used to calculate the rate of heat transfer by conduction through walls, ceilings, and floors. The greater the difference, the higher the rate of heat transfer.
- Heat loss through basement walls is only considered if the basement is used as living space. Heat loss through a slab on grade is determined based on the perimeter of the slab. Heat loss and gain through a floor above a crawl space is calculated the same way as heat loss through a wall.
- Infiltration refers to outdoor air entering a building through gaps in the construction. Exfiltration refers to air leaving a building through gaps in the construction. The amount of heat lost or gained due to infiltration and exfiltration is dependent on the tightness of the building's construction, the amount of exposure to outdoor conditions, and the temperature and moisture content of the indoor and outdoor air.
- Regarding heat loss due to infiltration, only sensible heat loss (not latent heat loss) is considered for calculating heating loads. For calculating cooling loads, both sensible and latent heat gains due to infiltration are included.
- As the sun moves across the sky, it shines on different areas of a building at different angles, heating them up. The areas affected by the sun load vary with the season and time of day. The heat added by the sun load must be included in cooling load calculations, but is not included in heating load calculations.
- Heat lag refers to the time it takes for heat to be conducted through a substance. Because of heat lag, a wall that is heated by the sun can continue to release heat into the conditioned space after the sun has gone down. With no sun and lower temperature outdoors than indoors, heat transfer can reverse direction.
- People, lights, and appliances all release heat into a conditioned space. In the case of people and animals, both sensible and latent heat are released. These miscellaneous heat loads must be included in cooling load calculations.
- Many local authorities and building codes require the use of the Manual J method to calculate a residential building's heating and cooling loads. For commercial buildings, Manual N is used. These manuals take into account local weather conditions, building materials, building layout, and numerous aspects of construction. Numerous tables and values are compiled to calculate a building's heating and cooling needs.

Copyright Goodheart-Willcox Co., Inc.

- Total heat loads are the sum of the individual heat loads. Heating and cooling load software is available for personal computers, tablets, and smartphones. Use of this software greatly speeds up the process of determining the heating and cooling loads and properly sizing the equipment.

Review Questions

Answer the following questions using the information in this chapter.

1. The term "heat loss" refers to _____.
   A. a reduction in the heating capacity of the furnace
   B. a reduction in the rate at which heat is transferred through a material
   C. a transfer of heat from inside a building to outside a building
   D. a transfer of heat from outside a building to the inside of a building
2. Most local building codes require that heat loads for residential buildings be performed in compliance with the ACCA _____ specification.
   A. Manual D
   B. Manual J
   C. Manual N
   D. Manual R
3. Most local building codes require that heat loads for commercial buildings be performed in compliance with the ACCA _____ specification.
   A. Manual D
   B. Manual J
   C. Manual N
   D. Manual R
4. Which of the following heat loads is *not* considered when calculating heating loads for a building?
   A. Heat from appliances and occupants.
   B. Heat transferred by exfiltration and infiltration.
   C. Heat transferred through ceilings.
   D. Heat transferred through floors.
5. Which of the following heat loads would be considered *only* when cooling loads are being calculated?
   A. Heat transferred by conduction through walls, doors, and windows.
   B. Heat transferred due to infiltration and exfiltration.
   C. Sun load.
   D. None of the above.
6. A material's _____ indicates how much heat will transfer through one square foot of the material one inch thick in one hour when there is a 1°F temperature difference between the two sides of the material.
   A. C-value
   B. K-value
   C. R-value
   D. U-value
7. Which of the following accounts for the insulating effect of boundary air films?
   A. C-value
   B. K-value
   C. U-value
   D. All of the above.
8. The rate at which heat is transferred through a wall by conduction is dependent on the materials the wall is made of, the area of the wall, and _____.
   A. the pressure on each side of the wall
   B. the temperature difference between sides of the wall
   C. the volume of space enclosed by the wall
   D. All of the above.
9. For a heating load calculation, heat transfer through basement walls is *only* considered if the basement _____.
   A. is more than 6′ deep
   B. is used as a living space
   C. walls are less than 12″ thick
   D. walls are uninsulated
10. Heat loss due to construction of a concrete slab on grade is calculated based on _____.
    A. the area of the slab
    B. the perimeter of the slab
    C. the volume of the slab
    D. None of the above.

Copyright Goodheart-Willcox Co., Inc.

11. Because a vented crawl space is exposed to outdoor air, heat loss through a floor over a crawl space is calculated the same as that of a(n) _____.
    A. basement
    B. exterior wall
    C. insulated ceiling
    D. unvented attic
12. Adding weather-stripping to all doors and windows, using building wrap and plenty of insulation during construction, and using a fresh air intake for positive pressure in a building are effective methods of reducing _____.
    A. design temperatures
    B. exfiltration
    C. infiltration
    D. sun load
13. Heat loss or gain due to infiltration and exfiltration is dependent on _____.
    A. the tightness of a building's construction
    B. the amount of wall area exposed to outdoor conditions
    C. the temperature difference between the indoor and outdoor air
    D. All of the above.
14. The relative ability of a surface to allow light rays to pass through describes _____.
    A. emissivity
    B. heat leakage
    C. heat loss
    D. luminescent transmittance
15. Total heat load is calculated by _____.
    A. adding together the individual heat loads
    B. dividing the individual heat loads by the area to which they apply
    C. multiplying the individual heat loads by the volume of the space to which they apply
    D. rough estimate

Copyright Goodheart-Willcox Co., Inc.

CHAPTER 38 Forced-Air Heating Fundamentals

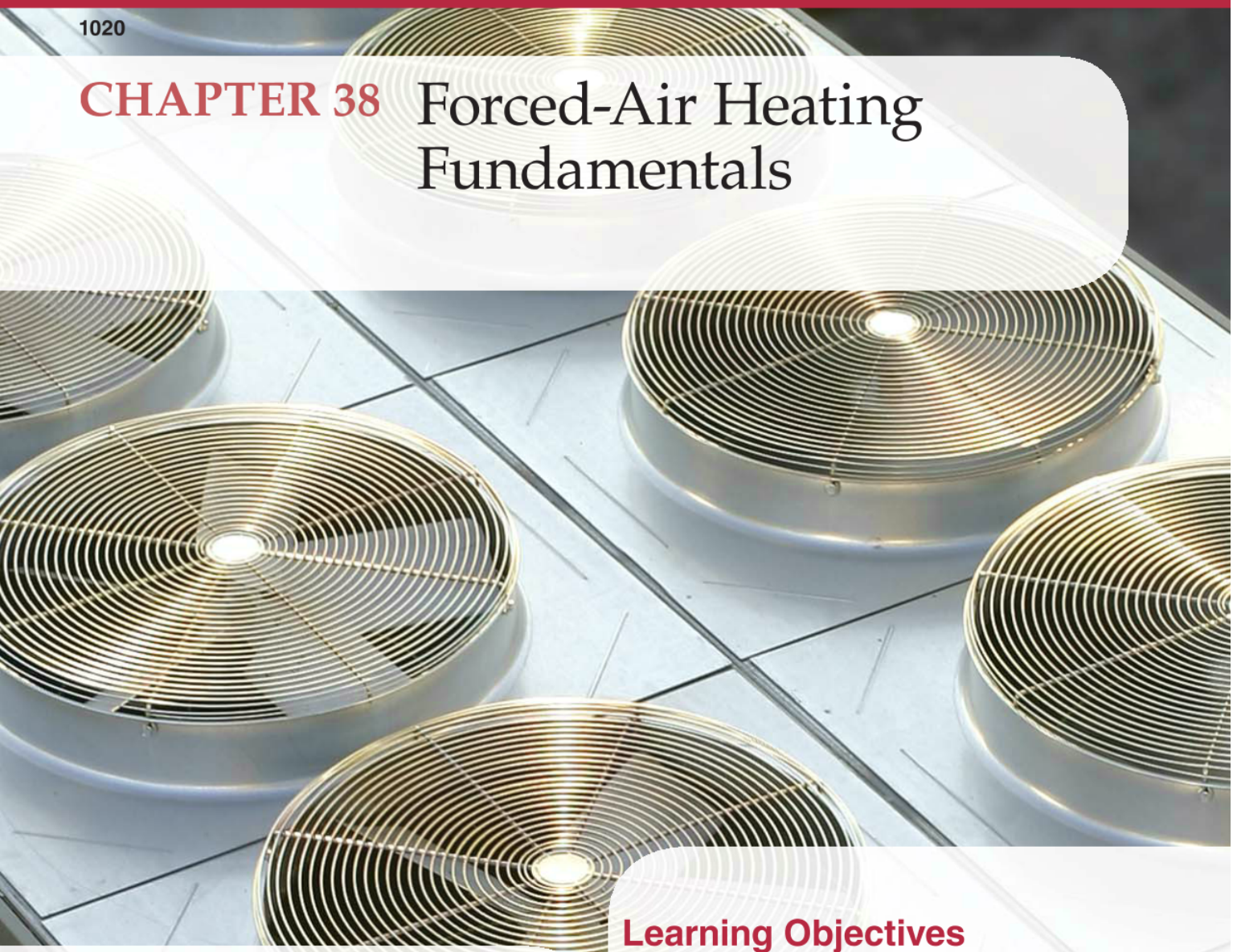

Chapter Outline

38.1 Basic Components
- 38.1.1 Heat Sources
- 38.1.2 Heat Exchangers
- 38.1.3 Indoor Blowers
- 38.1.4 Combustion Blowers

38.2 Furnace Types and Construction
- 38.2.1 Upflow Furnace
- 38.2.2 Downflow Furnace
- 38.2.3 Horizontal Furnace
- 38.2.4 Two-Stage Furnace
- 38.2.5 Modulating Furnace

38.3 Forced-Air Duct Arrangements
38.4 Makeup Air Units
38.5 Blower Controls
38.6 Unit Heaters

Learning Objectives

Information in this chapter will enable you to:

- Identify the basic components of a forced-air heating system and explain their functions.
- Understand the difference between a condensing and a noncondensing furnace.
- Describe the different types of indoor blower and combustion blower arrangements.
- Compare and contrast upflow, downflow, and horizontal furnaces.
- Summarize the operation of two-stage furnaces and modulating furnaces.
- Explain how makeup air units improve system efficiency and prevent negative pressure from developing in a house.
- Understand how blower function can be controlled using time-delay controls and thermostatic controls.
- Summarize the design and purpose of unit heaters.

Technical Terms

blower
combustion blower
condensing furnace
downflow furnace
forced-air heating system
gravity heating system
heat exchanger
highboy furnace
horizontal furnace
indoor blower
lowboy furnace
makeup air unit
modulating furnace
multipoise furnace
noncondensing furnace
primary heat exchanger
secondary heat exchanger
two-stage furnace
unit heater
upflow furnace

Review of Key Concepts

Reviewing these concepts from earlier chapters will help you understand new concepts presented in this chapter:

- Heated air moves from a furnace to the rooms of a house through convection, which is the movement of heat from one place to another by way of a liquid or gas. (Chapter 4)
- Heated or cooled air from an air handler is forced by a blower into conditioned space through a network of fixed ducts. (Chapter 32)
- Fuel-burning furnaces need air for proper and complete combustion. If the combustion air is drawn from inside the house, the combustion exhaust leaving through the flue or vent creates a slightly negative pressure inside the house. (Chapter 29)
- Many HVAC systems provide continual replacement of air by slowly bringing in fresh air from outside to be heated or cooled. This fresh air is called makeup air. (Chapter 27)
- Sensing bulbs and bimetal devices are two common types of temperature sensors used as thermostatic controls. (Chapter 16)

Introduction

Heating systems can be classified in a number of ways. Two common ways of classifying heating systems are by heat source and by heat distribution method. Common heat sources include oil, gas, electricity, geothermal energy, and air. Methods of heat distribution include forced-air, hydronic, and radiant distribution. Forced air and hydronic are the types of heating systems most commonly used in homes and offices. Radiant heating systems are often used in large, open commercial environments, such as warehouses and workshops.

A complete heating system combines one or more heat sources with one or more methods of heat distribution. Gas, oil, and electric heating systems can all transfer heat through forced-air, hydronic, or radiant distribution. This chapter provides an overview of heating systems that distribute heat using the forced-air method. Later chapters in this section will address hydronic and radiant distribution and provide more detailed information about the various methods of generating heat.

Video

- Forced-Air Heating

38.1 Basic Components

The majority of heat pumps and heating systems that use gas, oil, or electricity to produce heat use forced air to distribute that heat. In a ***forced-air heating system***, a motor-driven fan, called a ***blower***, circulates air. By circulating heated air through ducts to conditioned space and drawing cool air from those conditioned spaces, forced-air heating systems produce an evenly conditioned space.

Before forced-air heating systems were developed, heating systems relied on natural convection to distribute heated air. These are called ***gravity heating systems***. Since heated air is lighter than cool air, gravity heating systems function on the principle that hot air rises and cool air drops. With the furnace or heat source in the lower part of a building, the heated air in a gravity heating system naturally rises into the rest of the building, and the cool air drops back to the furnace, where it is reheated. This method of heat distribution is inefficient and has largely been replaced by forced-air heating systems.

Oil and gas furnaces contain the following basic components:

- Combustion chamber.
- Fuel delivery method and burning device (burner).
- Flue or outlet.
- Heat exchanger.

The combustion chamber must be leakproof and provide efficient heat transfer. The basic components of a gas-fired or oil-fired, forced-air furnace are the same whether the furnace is a high-efficiency model or a lower-efficiency model, with the exception that an extra heat exchanger is added to high-efficiency models. Typical forced-air furnaces are equipped with a burner, a combustion blower to move combustion gases, one or more heat exchangers, and an indoor blower to circulate air through the ductwork. Electric heating systems consist of one or more electric resistance heating elements with a fan and duct system circulating air across them.

38.1.1 Heat Sources

Every forced-air heating system requires a heat source. The heat source may consist of a gas flame, an oil flame, the indoor coil of a heat pump, or an electric resistance heating element. The circulating air in the forced-air system is warmed by the heat source and then circulated to the spaces where heat is needed.

38.1.2 Heat Exchangers

A furnace's ***heat exchanger*** is a chamber where the heat of combustion is transferred to the surrounding air. A heat exchanger is sealed to prevent the combustion gases from mixing with the air that will be circulated through the conditioned space. In addition to providing heat to the circulating air, a heat exchanger carries combustion (flue) gases to the exhaust flue or vent where they are released outdoors. Heat exchangers are also used in hydronic heating systems to transfer the heat from combustion gases to water in a boiler. Hydronic systems are covered in Chapter 39, *Hydronic Heating Fundamentals*.

Heat exchangers are categorized as either primary or secondary. A ***primary heat exchanger*** is connected directly to the combustion chamber and transfers sensible heat from its surface to the air circulated through the conditioned space. The combustion chamber is often indistinguishable from the heat exchanger and is just the first part of the heat exchanger itself. Primary heat exchangers can be constructed from a variety of materials to provide different rates of heat transfer.

High-efficiency furnaces are also equipped with a secondary heat exchanger. A ***secondary heat exchanger*** is attached at the outlet of the primary heat exchanger and transfers both sensible and latent heat from the combustion gases to the circulating air, **Figure 38-1**.

Traditional furnaces quickly exhaust combustion gases, losing some of the heat potential from the fuel combustion process. ***Condensing furnaces*** are high-efficiency furnaces with annual fuel utilization efficiency (AFUE) ratings above 90%. Condensing furnaces differ from traditional furnaces in that they use both primary and secondary heat exchangers to extract additional heat from the combustion process. In a condensing furnace, heat is extracted for a longer period until the combustion gases give up enough heat to condense, hence the name condensing furnaces.

Combustion gases pass through the primary heat exchanger and then into the secondary heat exchanger. In a condensing furnace's heat exchanger, the air circulated from conditioned space travels in the opposite direction as the combustion gases. Circulating air traveling through a furnace passes the secondary heat exchanger and then passes the primary heat exchanger. Since the circulating air passes over the secondary heat exchanger first, it is able to absorb the maximum amount of heat possible, including the latent heat released by the combustion gases as they condense. The prewarmed circulating air then passes over the primary heat exchanger where it absorbs additional heat. See **Figure 38-2**.

Heat is removed from the combustion gases in the secondary heat exchanger until condensate (condensed gas) drips out. Because condensing furnaces have lower temperature exhaust fumes, the combustion gases can be routed through a PVC or CPVC pipe instead of a chimney or metal flue.

Copyright Goodheart-Willcox Co., Inc.

Code Alert

Chimneys and Vents

Proper combustion venting is absolutely critical for equipment efficiency and for the health and safety of building occupants. Local building codes specify acceptable designs, approved materials, and any special considerations for the venting of combustion gases.

Most condensing furnaces are gas-fired furnaces. However, some oil-fired condensing furnaces are available. Because the condensate generated in a secondary heat exchanger can be somewhat corrosive, secondary heat exchangers are typically made of stainless steel and include a drain to remove accumulated condensate. If an acceptable drain is not readily available, a condensate pump may be used to redirect the condensate.

Rheem Manufacturing Company

Figure 38-1. Cutaway of a high-efficiency gas furnace showing the primary and secondary heat exchangers.

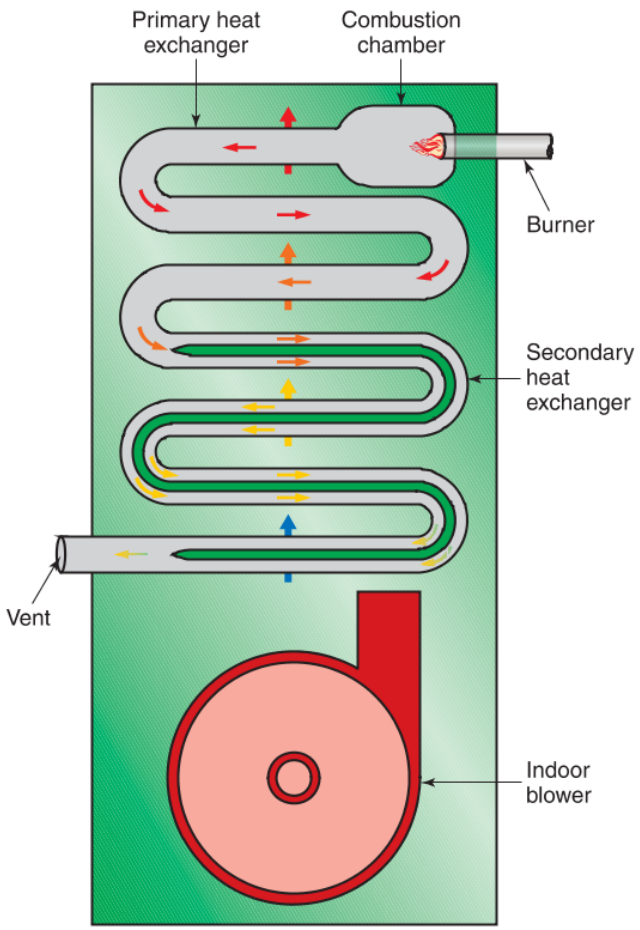

Goodheart-Willcox Publisher

Figure 38-2. In a condensing furnace, circulating air passes over the secondary heat exchanger before it passes over the primary heat exchanger. This counterflow of combustion gas to circulating air allows for the maximum exchange of heat.

Noncondensing furnaces have lower-efficiency with an AFUE rating between 80% and 90%. In these furnaces, a single heat exchanger transfers heat from the combustion gases to air circulated to the conditioned space. The combustion gases are vented to a flue or chimney with a flue liner. Since up to 20% of the heat produced goes up the chimney, the combustion gas flows outside without condensing. See **Figure 38-3**.

Safety Note

Heat Exchanger Cracks

Before each cold season begins, heat exchangers should be checked for cracks. Deadly gas (such as carbon monoxide, CO) can seep through cracks and into conditioned spaces. This can result in illness and even death.

Copyright Goodheart-Willcox Co., Inc.

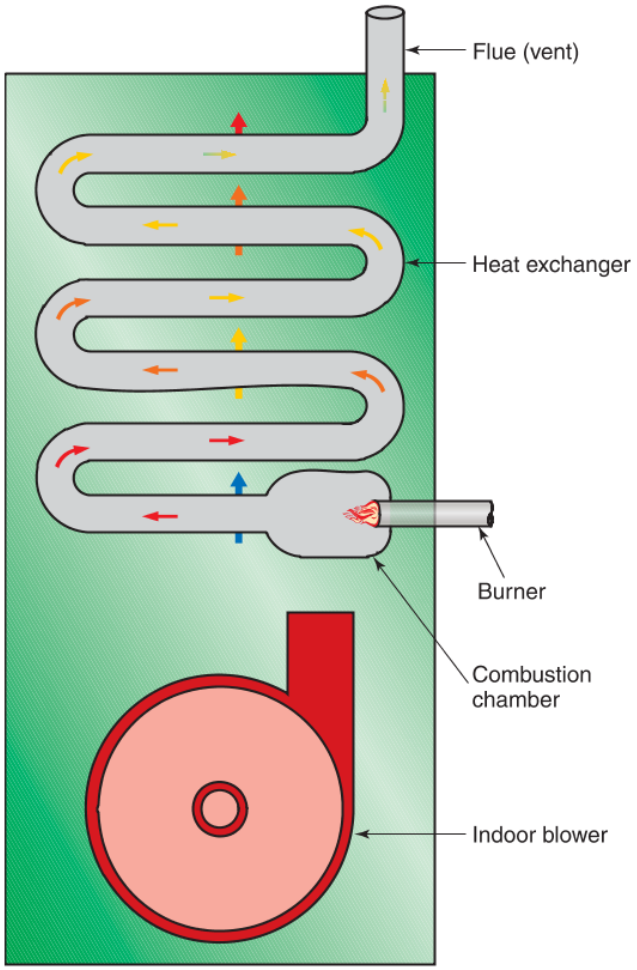

Goodheart-Willcox Publisher

Figure 38-3. In a noncondensing furnace, circulating air passes over a single heat exchanger.

38.1.3 Indoor Blowers

A furnace's ***indoor blower*** creates airflow through the heat exchanger and ductwork to deliver warm air to the conditioned space and draw cool air into the furnace to be heated. These blowers are typically equipped with electric motors with up to 3/4 hp. Two basic types of blower setups are commonly used in residential systems: belt-driven blowers and direct-drive blowers, **Figure 38-4**.

Belt-driven blowers are mostly found on older oil-fired furnaces and large commercial units. On a belt-driven blower, the blower motor is separate from the blower fan. A standard V-belt connects a pulley on the motor to a pulley on the blower fan. The pulleys can be different sizes. The larger the pulley on the motor, the faster the blower fan turns. The larger the pulley on the fan, the slower it turns. A variable-pitch pulley is

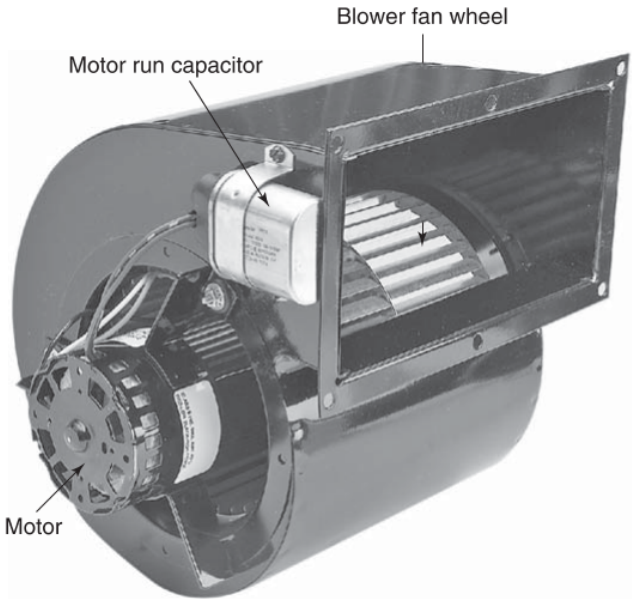

Direct-Drive Blower

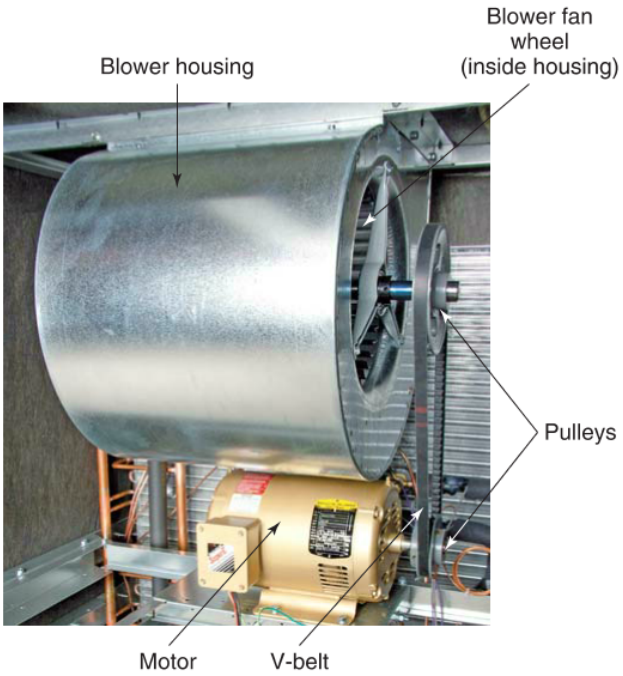

Belt-Driven Blower

Photo courtesy of A. O. Smith; ClimateMaster

Figure 38-4. A direct-drive blower's fan is attached directly to the motor shaft, while a belt-driven blower's fan is connected to a motor using a pulley and belt arrangement.

Copyright Goodheart-Willcox Co., Inc.

available that can open and close to differing diameters. By varying the diameters of the motor pulley and fan pulley, a technician can make the blower fan turn faster or slower. However, belt-driven blowers are less efficient than direct-drive blowers due to belt and bearing energy losses.

Pro Tip

Belt Width

A V-belt must have the same width as the grooves in the motor and fan pulleys in which it rides. Inspect this on service calls when applicable.

In direct-drive blowers, the shaft of the blower motor is connected directly to the blower fan. Since they are directly connected, the blower and motor turn at the same speed (RPM). Blower motors with variable frequency drives can vary their speed as needed to meet the conditioned area's heating requirements. Solid-state controls can be used to constantly monitor a furnace's heat output, firing rate, and blower speed.

Belt-driven blowers and large, heavy direct-drive blowers demand the high starting torque of a split-phase, capacitor-start, or three-phase motor. In both direct-drive and belt-driven blower arrangements, the blower fan must be clean, and the blades should not be bent or broken. Bent or broken blades will place the fan off balance and result in vibration, which will shorten the life of the motor.

38.1.4 Combustion Blowers

A ***combustion blower*** is a motor-driven fan that brings fresh air into the combustion chamber and expels combustion gases out through the heat exchanger and flue. There are two types of combustion blowers: induced-draft blowers and forced-draft blowers. Induced-draft blowers are located downstream from the heat exchanger and pull combustion gases through the heat exchanger. Forced-draft blowers are located upstream from the heat exchanger and push combustion gases through the heat exchanger. See **Figure 38-5**.

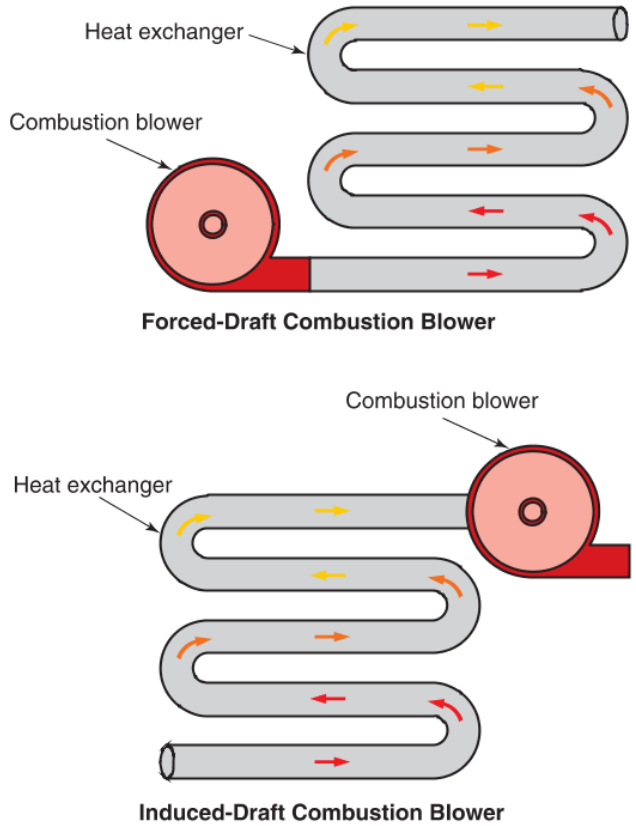

Goodheart-Willcox Publisher

Figure 38-5. A combustion blower is categorized as a forced-draft or an induced-draft blower depending on its position relative to the heat exchanger.

38.2 Furnace Types and Construction

Furnace design is based on several factors. These include the fuel used, the space available, and the heat-transfer medium. Common heat-transfer mediums include air, water, and steam.

Most furnaces are made of steel. Blower compartments are lined with insulation to reduce heat loss. The insulation also serves as a noise barrier. Furnaces also require return air ductwork. This ductwork supplies the furnace with air to be reheated (or recooled by a central air-conditioning evaporator during the cooling season). There are three common furnace designs: upflow, downflow, and horizontal. A fourth type of furnace, called a ***multipoise furnace***, can be configured as an upflow, downflow, or horizontal furnace.

In addition to the classifications based on airflow, furnaces can also be categorized by the shape of their cabinets. A ***highboy furnace*** is typically taller than it is wide or long. These types of furnaces are installed in basements or in utility rooms where vertical space is not an issue. The internal components of a ***lowboy furnace*** are arranged in a way that minimizes the height of the cabinet. A lowboy furnace is much shorter than a highboy furnace of comparable capacity. However, the lowboy furnace may be longer or wider. Lowboy furnaces are installed in spaces where there is limited vertical clearance.

Copyright Goodheart-Willcox Co., Inc.

Code Alert

Forced-Air Furnaces

Local building codes specify the types of furnaces that can be installed, restrictions on the placement of furnaces, and minimum duct requirements. Codes also address special considerations and restrictions associated with the installation of a furnace. Codes may even regulate the installation of burners to convert furnaces from fuel oil to gas.

38.2.1 Upflow Furnace

An ***upflow furnace*** takes in return air from the bottom and forces it upward around the heat exchanger and into the supply plenum. Upflow furnaces are the most common type of furnace installed in basements and utility rooms, where the ductwork runs above the level of the furnace. In upflow systems, the supply (warm) air is delivered upward, from the top of the furnace into an overhead duct system, **Figure 38-6**.

38.2.2 Downflow Furnace

A ***downflow furnace*** takes in return air from the top and forces it downward around the heat exchanger. Downflow furnaces are also referred to as *counterflow furnaces*. These types of furnaces are commonly used if the ductwork runs below the level of the furnace. For example, if a house is built on a crawlspace and the ductwork is located under the floor, a downflow furnace is used. Supply air is delivered from the bottom of the furnace to the duct system below it, **Figure 38-7**.

38.2.3 Horizontal Furnace

Horizontal furnaces are placed on their side. In a ***horizontal furnace***, return air flows in a horizontal path through one end of the furnace, across the heat exchanger, and out through the opposite end of the furnace. Horizontal furnaces are typically installed in tight spaces, such as in attics or in crawlspaces, **Figure 38-8**.

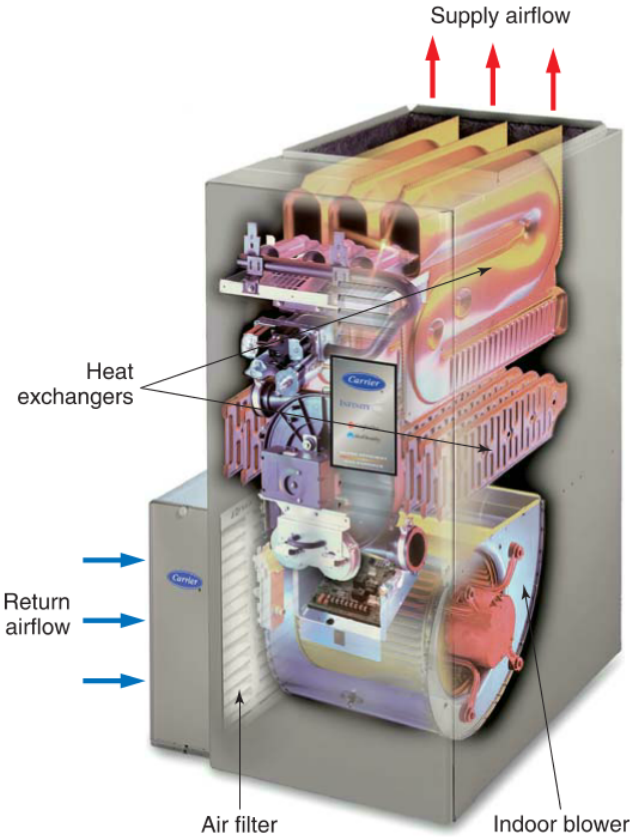

Carrier Corporation, Subsidiary of United Technologies Corp.

Figure 38-6. Return air enters at the bottom of an upflow furnace and exits at the top after flowing past the heat exchangers.

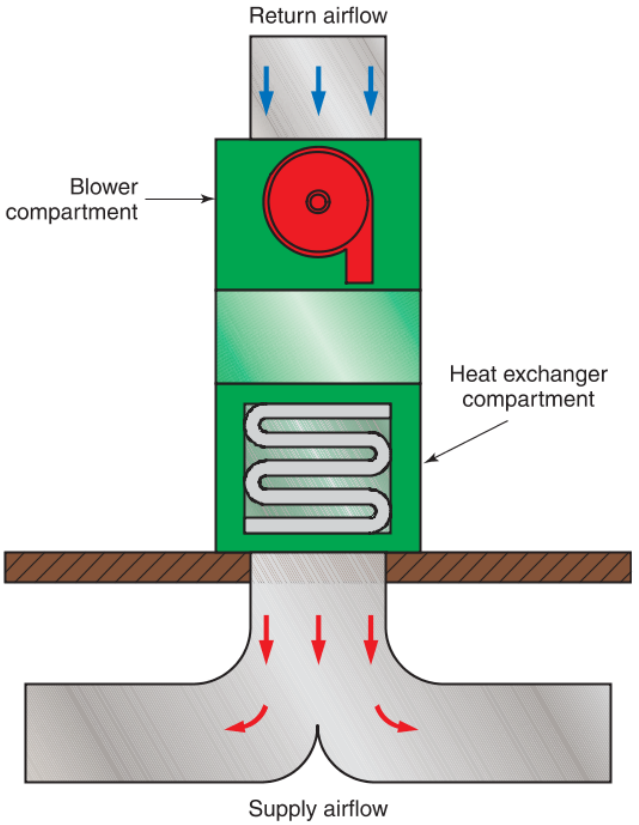

Goodheart-Willcox Publisher

Figure 38-7. Return air enters a downflow furnace from the top and exits at the bottom after flowing past the heat exchanger.

Copyright Goodheart-Willcox Co., Inc.

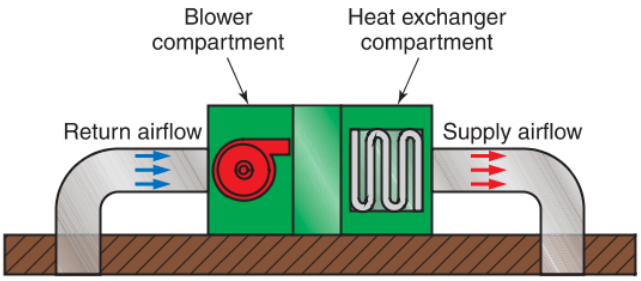

Goodheart-Willcox Publisher

Figure 38-8. Return air enters a horizontal furnace from one side and exits through the other side after flowing past the heat exchanger.

Safety Note

Interlocks and Access Panels

A safety interlock switch is often provided inside a furnace's blower access door (panel). When the door or panel is opened or removed, this switch turns off electrical power to all components and eliminates the possibility of personal injury due to moving parts.

38.2.4 Two-Stage Furnace

A standard furnace has only one heat level—high. It waits until the temperature in the conditioned space drops, then it starts up and runs at one constant output when it receives a call for heat. A ***two-stage furnace*** can produce two different levels of heat, allowing it to adjust heat output to meet demand. The flame can be on high, low, or off. When less heat is required, a two-stage furnace operates on the first stage, which uses a lower percentage of its capacity to produce sufficient heat. This stage consumes less energy, thereby increasing efficiency and cost-effectiveness. In addition, two-stage furnaces are much quieter than single-stage furnaces.

On colder days, the furnace functions on the second stage to provide high heat. This allows the unit to meet the demands for more extreme temperatures. The blower motor speed increases when the furnace switches to the second stage. By producing more or less heat for a given amount of time, a two-stage furnace adjusts to changing heat loads. This adaptability helps to maintain a consistent temperature in the conditioned area by reducing the temperature fluctuation caused by excessive heat being distributed too quickly. In addition, the blower fan slowly increases or decreases speed during start-up and shutdown, eliminating the sound of rushing air as it enters or exits ducts.

Thinking Green

Variable Speed Blower Motors

Variable speed blower motors adjust speed automatically to meet the temperature requirements set on the thermostat, creating a more comfortable environment and increasing efficiency. They also keep air circulating at a low speed between cycles, thereby limiting energy waste significantly. The consistent airflow also allows the air filter to trap more pollutants, providing better indoor air quality.

38.2.5 Modulating Furnace

A ***modulating furnace*** is a furnace that can vary its heat output. In some models, heat output can be controlled from 40% to 100% of their total capacity. Solid-state integrated controls act as the "brain" of the furnace. After receiving a call for heat from the thermostat, the controls initiate and manage a sequence of events directing the furnace so that it supplies heat to the building efficiently. Some furnaces can automatically choose the most efficient indoor blower speed when continuous air circulation is desired. An induced-draft combustion blower quietly provides air for combustion and vents the products of combustion from the heat exchanger to the outdoors.

38.3 Forced-Air Duct Arrangements

A forced-air heating system uses a motor-driven fan called an indoor blower to circulate heated air. With this heating arrangement, a system of ducts, referred to as supply air ducts, delivers warm air to the conditioned spaces. Another system of ducts, referred to as return air ducts, brings air back to the furnace for reheating. Both supply and return air ducts should be carefully sized to provide the correct amount of airflow to each room, **Figure 38-9**.

Forced-air duct systems usually include an air filter in the return air duct to the furnace. A humidifier is often installed in the supply airflow to provide the desired relative humidity conditions. Duct systems often include numerous dampers, grilles, diffusers, and registers to manage airflow. To review these components or for information about duct sizing, see Chapter 29, *Air Distribution*.

38.4 Makeup Air Units

Negative pressure problems are often caused by forced-air heating systems, which require oxygen and fresh air if they use combustion in the furnace (gas-fired

Copyright Goodheart-Willcox Co., Inc.

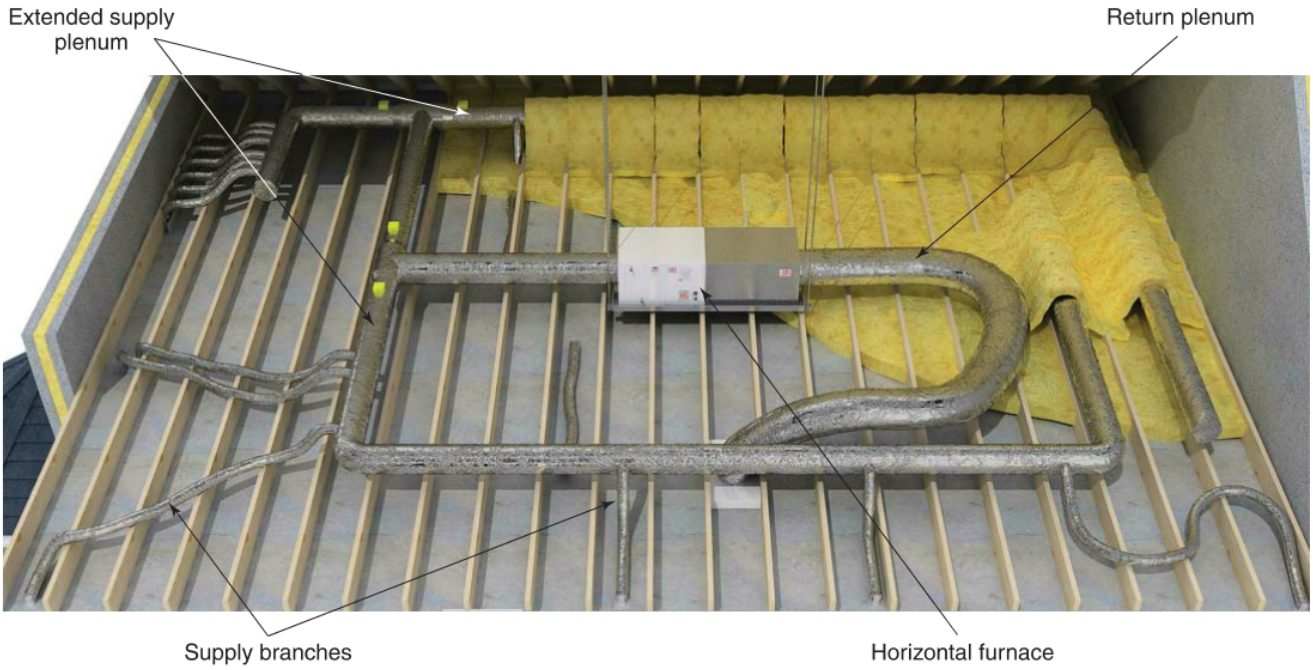

Hi-Velocity Systems

Figure 38-9. This SDHV (small duct, high-velocity) system uses a horizontal furnace installed in an attic.

or oil-fired). If a dedicated fresh air supply is not available for the furnace, a home that is sealed and insulated well can result in negative pressure developing due to the furnace's need for fresh air. Rather than allowing this negative pressure to cause infiltration around doors, windows, or wherever an unintended opening might be, a technician can install a makeup air unit.

A ***makeup air unit*** is a device that controls and regulates the necessary intake of fresh air into a building. Current codes and regulations in many states require the use of makeup air units to prevent negative pressure from developing in a house. In a single-family residence, a makeup air unit is usually an automatic, passive device with few controls. Makeup air units for larger installations and commercial applications are often automatic, active devices with more controls.

Although variety exists in manufacturing, there are two common places where makeup air is deposited in a building: directly into the return air duct or into the furnace room. **Figure 38-10A** shows a makeup air unit that deposits makeup air into the return air duct. One part is installed along an exterior wall, where outside fresh air can enter it, and the other part is installed on the return air duct. A run of duct connects the two parts. The part connected to the return air duct has a weighted arm attached to a damper. When the indoor blower runs, it creates a low pressure in the return air duct. This allows the outside air, which has a higher pressure, to push open the damper. Outside air flows into the return air duct as long as the blower remains on. Outside air regulated by this type of makeup air unit is immediately filtered and conditioned as it flows from outside into the air handler.

Figure 38-10B shows a makeup air unit that delivers makeup air into a building's furnace room or mechanical room. This makeup air unit is installed on or very near the air handler. Outside air flows in through a screened opening installed on the outside of the building and through ductwork that connects to the makeup air unit. The unit operates based on positive and negative pressure. When the indoor air pressure is reduced, outside air flows through the makeup air unit and into the furnace or mechanical room to equalize indoor and outdoor air pressures. Outside air may also flow in to provide oxygen for combustion in a furnace that draws its combustion air from within the building.

Thinking Green

Makeup Air Units and Combustion

In addition to causing unwanted air infiltration, another side effect of negative pressure is that a gas-fired or oil-fired furnace can become starved for air. A lack of air negatively affects combustion, reducing a system's efficiency. Since makeup air units bring in a supply of fresh air from the outside, ample air is available for combustion, maintaining high furnace efficiency.

Copyright Goodheart-Willcox Co., Inc.

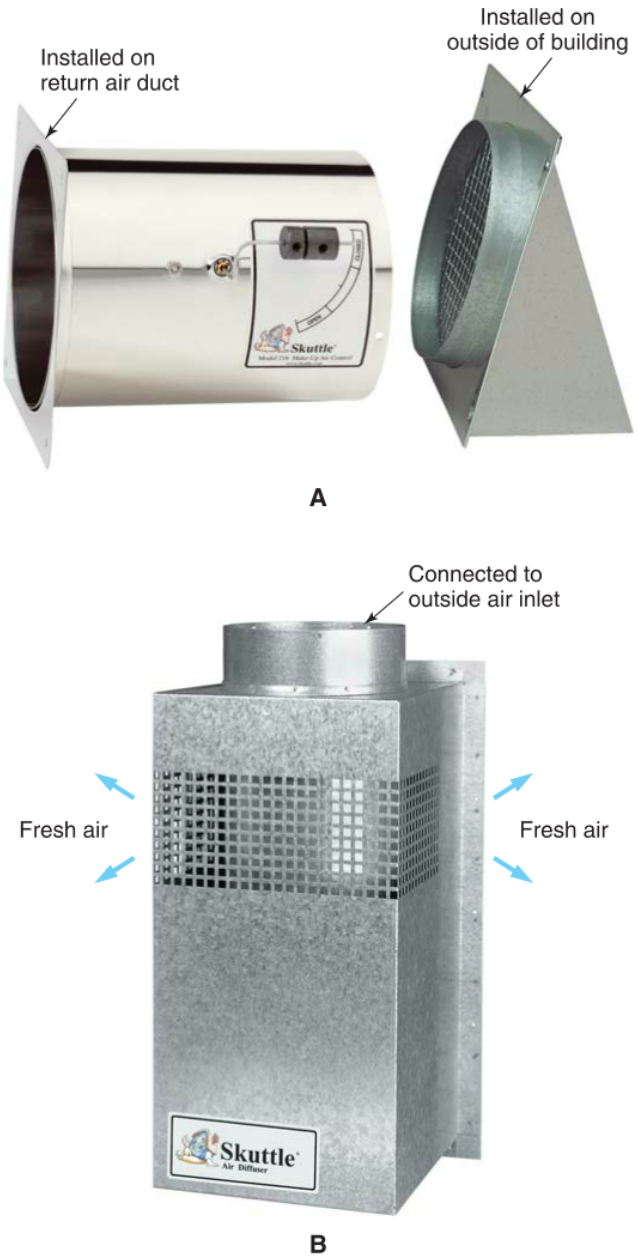

Skuttle IAQ Products

Figure 38-10. Two types of makeup air units. A—The screened opening installed on the outside of the building allows fresh air to pass inside. Ductwork connects each part. The part attached to the return air duct uses a weighted arm on a damper to control airflow. B—Outside air flows through a screened opening, a length of duct, and the makeup air unit into a building's mechanical room to equalize inside and outside air pressure.

Pro Tip

Makeup Air Unit Location

Refer to manufacturer instructions for makeup air unit installation details. Outside air inlets typically must be installed a certain distance away from appliance exhaust outlets. Also, some makeup air units must be installed within a certain distance of the furnace.

38.5 Blower Controls

There are several different devices that engage or disengage a forced-air heating system's blower fan. These overlapping controls are used for normal operation and for preventing personal harm and property damage in case of malfunction. Normally, a forced-air heating system turns on the blower fan automatically. This is initiated when the thermostat calls for heat. When and how the blower turns on varies for gas, oil, and electric heating systems.

Blower controls generally use measurements of time or temperature to regulate when to turn on or turn off a blower fan. When a furnace responds to a thermostat's call for heat, the blower turns on in response to a time-delay control or thermostatic control. For gas and oil systems, the time delay allows air in the plenum to warm up before circulating, which prevents or minimizes an initial blast of cold air from the supply registers.

A time-delay control may come in a variety of forms. Time-delay controls may be simple electromechanical devices with a switch that changes after a set amount of time. In other cases, time-delay control may be built into a circuit board or other electronic control unit. These electronic controls can often be adjusted by toggling dual in-line package (DIP) switches or by changing jumper terminals mounted directly on the circuit board. See **Figure 38-11**.

A thermostatic blower control turns on the blower after the plenum has reached a specific temperature, typically around 140°F (60°C). Once the thermostat has ended its call for heat, the burner shuts down, but the blower continues to operate. As the blower continues to circulate air, the temperature in the plenum gradually drops. When the temperature has dropped enough, usually around 90°F (32°C), the thermostatic control opens its contact points to stop blower operation. Thermostatic blower controls are often adjustable. These devices vary in form but generally consist of an electric switch operated by a bimetal disc, a bimetal helix, or a fluid-filled sensing bulb, **Figure 38-12**.

Copyright Goodheart-Willcox Co., Inc.

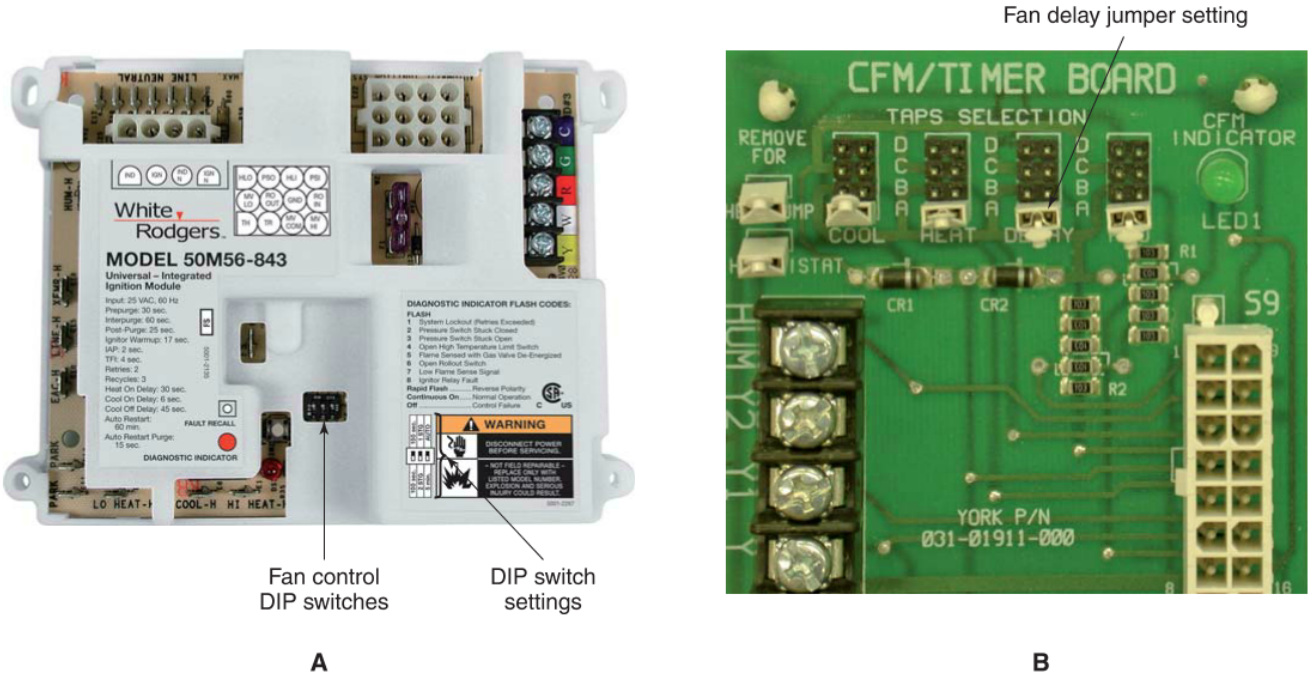

White-Rodgers Division, Emerson Climate Technologies; York International Corp.

Figure 38-11. Types of time-delay controls. A—Control module with DIP switches used to control blower fan operation when the thermostat is in heating mode. These different switches select the stage of heating operation and set the blower delay time for each stage of operation. B—Control board with jumpers used to set the blower fan delay time.

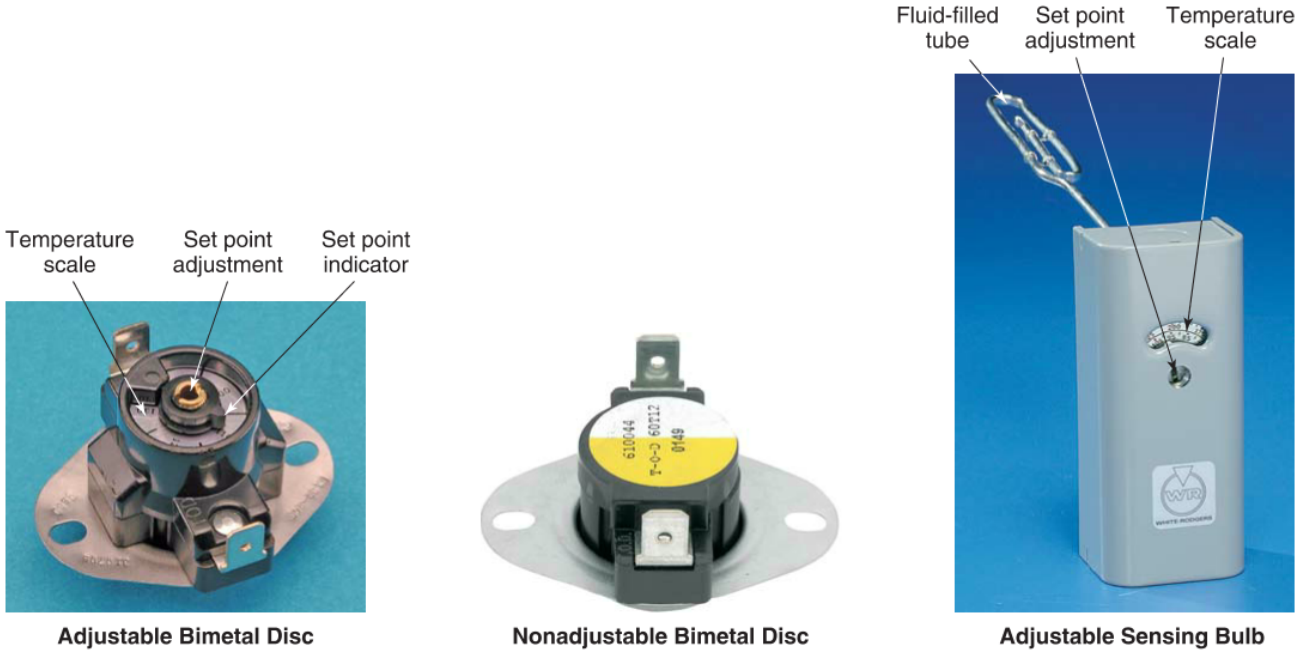

Emerson Climate Technologies

Figure 38-12. Types of thermostatic controls.

Copyright Goodheart-Willcox Co., Inc.

CCI Thermal Technologies Inc.

Figure 38-13. A unit heater can be used to offset heat loss through an open door.

Pro Tip

The Term "Thermostat"

Specific industries, such as HVACR, develop their own jargon. As a result, when an industry person and a non-industry person use the word *thermostat*, each person may not mean the same thing. To most non-HVACR people, the thermostat is the device they operate to change the temperature in their building. To HVACR people, a thermostat may be any kind of switch that automatically responds to a change in temperature, such as a bimetal disc. Many HVACR parts manufacturers list bimetal switches as thermostats. Be mindful of the word *thermostat* and what that term may mean to the person using it.

In some cases, a blower control is in the same casing as a limit control. In a heating system, a limit control is a temperature-sensing switch that remains closed as long as the plenum temperature remains below its set point. If the temperature in the plenum reaches the limit control's set point, the control opens its switch to shut down the burner or heating elements. This action stops heat production in the furnace. The limit control's high set point temperature indicates a system malfunction, such as the blower fan no longer operating or a lack of airflow, both of which allow excessive heat to build up in the furnace. To avoid furnace damage from overheating, the limit control switches off the system to stop the production of heat.

Pro Tip

Fan Switch or Limit Switch

Many fan switches are designed by manufacturers to have adjustable controls and a broad range of operation. When a device has an adjustable set point, it can be set to function as either a fan switch or a limit switch.

38.6 Unit Heaters

A ***unit heater*** is a ductless, forced-air heating unit that is designed to heat a large, open area or to be used in a specific heating application. These units may be gas-fired, oil-fired, or electric. In a unit heater, an electric blower moves air across the heating element and into the space to be heated. See **Figure 38-13**.

Many stores, commercial buildings, and factories use unit heaters to heat rooms or spaces that cannot be effectively or efficiently heated using a centralized forced-air system. For instance, unit heaters may be installed above doorways to direct a high-velocity flow (about 2500 fpm) of warm air over large door openings, such as shipping and receiving doors to businesses and warehouses. This helps to warm any cold air that enters from the outside. Unit heaters are mounted about 3′ above and 4′ away from the opening. Operation is controlled by a door switch and a thermostat connected in parallel. Doors less than 8′ high and 10′ wide are typically not protected by unit heaters. With a unit heater's heating element switched off, the fan may be turned on in summer to help keep out dust and insects. In this way, a unit heater can operate as an air curtain.

Copyright Goodheart-Willcox Co., Inc.

Chapter Review

Summary

- In a forced-air HVAC system, a motor-driven fan, called a blower, circulates air. Before the development of forced-air heating systems, heated air was distributed by natural convection and cool air was returned to the furnace by gravity.
- Oil-fired and gas-fired forced-air furnaces consist of a combustion chamber, a fuel delivery method and burning device (burner), a flue or exhaust outlet, one or two heat exchangers, an indoor blower, and often a combustion blower.
- Condensing furnaces have a primary heat exchanger that transfers sensible heat from the combustion gases to the circulating air or water (in a hydronic system). A secondary heat exchanger transfers additional sensible heat and latent heat to the circulating air or water, causing the combustion gases to condense.
- Noncondensing furnaces have a single heat exchanger that transfers heat from the combustion gases to the circulating fluid. Since noncondensing furnaces are less efficient than condensing furnaces, the combustion gases do not lose enough heat to condense before reaching the outside.
- Indoor blowers create airflow through the heat exchanger and ductwork by drawing cool air into the furnace from the return air ducts and pushing heated air into conditioned space through the supply air ducts. Combustion blowers bring fresh air into a furnace's combustion chamber and expel combustion gases out through the flue.
- In an upflow furnace, return air is drawn in through the bottom of the furnace and heated supply air is discharged from the top of the furnace. In a downflow furnace, return air is taken in through the top of the furnace, and the heated supply air exits through the bottom of the furnace. A horizontal furnace is a furnace placed on its side, so the return air flows in a horizontal path from one end of the furnace to the other.
- A two-stage furnace is capable of running at a high output during periods of high heat demand and at a lower heat output during periods of low heat demand. Modulating furnaces can vary their heat output over a wide range to meet changing demands for heat.
- Makeup air units deliver fresh air to the furnace or building when needed. This additional air from the outside prevents a negative pressure from developing in the building.
- Forced-air heating systems typically have a time-delay control or thermostatic control that turns on the indoor blower a short time after the furnace turns on. A time-delay control allows air in the plenum to warm up before turning on the blower to circulate the air. A thermostatic control monitors the temperature in the plenum and turns the blower on and off at specific plenum temperatures.
- Unit heaters are ductless, forced-air heating units. They can be gas-fired, oil-fired, or electric. Unit heaters are commonly installed in large open areas or above large doorways, such as those in loading docks, to offset heat lost through the open doorway.

Review Questions

Answer the following questions using the information in this chapter.

1. Which of the following heat distribution methods relies on only natural convection to distribute heated air?
   A. Forced air.
   B. Gravity.
   C. Hydronic.
   D. All of the above.
2. Which of the following is *not* a basic component of a gas-fired furnace?
   A. Blower motor.
   B. Electric resistance heating element.
   C. Flue.
   D. Heat exchanger.
3. In a condensing furnace, circulating air passes over the _____ before passing over the primary heat exchanger.
   A. burner
   B. combustion blower
   C. flue
   D. secondary heat exchanger

Copyright Goodheart-Willcox Co., Inc.

4. Secondary heat exchangers are frequently made of stainless steel because they _____ other metals.
   A. are exposed to temperatures that would melt most
   B. are less likely to warp than heat exchangers made from
   C. can transfer heat much more rapidly than heat exchangers made from
   D. can withstand corrosive condensate much better than heat exchangers made from
5. Unlike a noncondensing furnace, a condensing furnace can use _____ for its exhaust flue.
   A. a chimney
   B. galvanized steel
   C. PVC or CPVC
   D. stainless steel
6. Noncondensing furnaces typically have an AFUE rating between _____.
   A. 10% and 25%
   B. 40% and 60%
   C. 80% and 90%
   D. 90% and 100%
7. Which of the following statements regarding direct-drive blowers is true?
   A. The blower fan spins at the same speed as the blower motor.
   B. The blower fan spins faster if it is equipped with a larger pulley.
   C. The blower fan spins faster if it is equipped with a smaller pulley.
   D. The blower fan speed is adjusted by varying pressure on the fan clutch.
8. Which of the following best describes the function of a combustion blower?
   A. It atomizes the fuel as it enters the combustion chamber.
   B. It brings fresh air into the combustion chamber and expels combustion gases.
   C. It compresses the fuel mixture as it enters the combustion chamber.
   D. It reduces draft in the flue.
9. The two types of combustion blowers are _____ blowers.
   A. primary and auxiliary
   B. downdraft and updraft
   C. forced-draft and induced-draft
   D. pre-combustion and post-combustion
10. If a house is built with the furnace in the basement and the ductwork running above the furnace, a(n) _____ furnace would most likely be installed.
    A. upflow
    B. downflow
    C. horizontal
    D. sideflow
11. Which of the following statements regarding two-stage furnaces is *not* true?
    A. Blower speed increases when the furnace switches to the second stage to provide high heat.
    B. Two-stage furnaces are much quieter than single-stage furnaces.
    C. Two-stage furnaces are more efficient than single-stage furnaces.
    D. Two-stage furnaces produce less consistent room temperatures than single-stage furnaces.
12. The purpose of a(n) _____ is to control and regulate the necessary intake of fresh air into a building.
    A. diffuser
    B. forced-draft blower
    C. induced-draft blower
    D. makeup air unit
13. A _____ furnace can control its heat output from 40% to 100% of their total capacity.
    A. high-boy
    B. modulating
    C. multipoise
    D. thermovariable
14. When a furnace responds to a call for heat, there is usually a brief delay before the blower activates that _____.
    A. may be based on either elapsed time or a temperature set point
    B. minimizes the blast of cold air leaving the ducts when the blower turns on
    C. provides time for the plenum to heat up
    D. All of the above.
15. Which of the following statements about unit heaters is *not* true?
    A. Unit heaters are ductless.
    B. Unit heaters are primarily used in residences.
    C. Unit heaters can be gas-fired, oil-fired, or electric.
    D. Unit heaters may be mounted above warehouse receiving door openings.

Copyright Goodheart-Willcox Co., Inc.

CHAPTER 39 Hydronic Heating Fundamentals

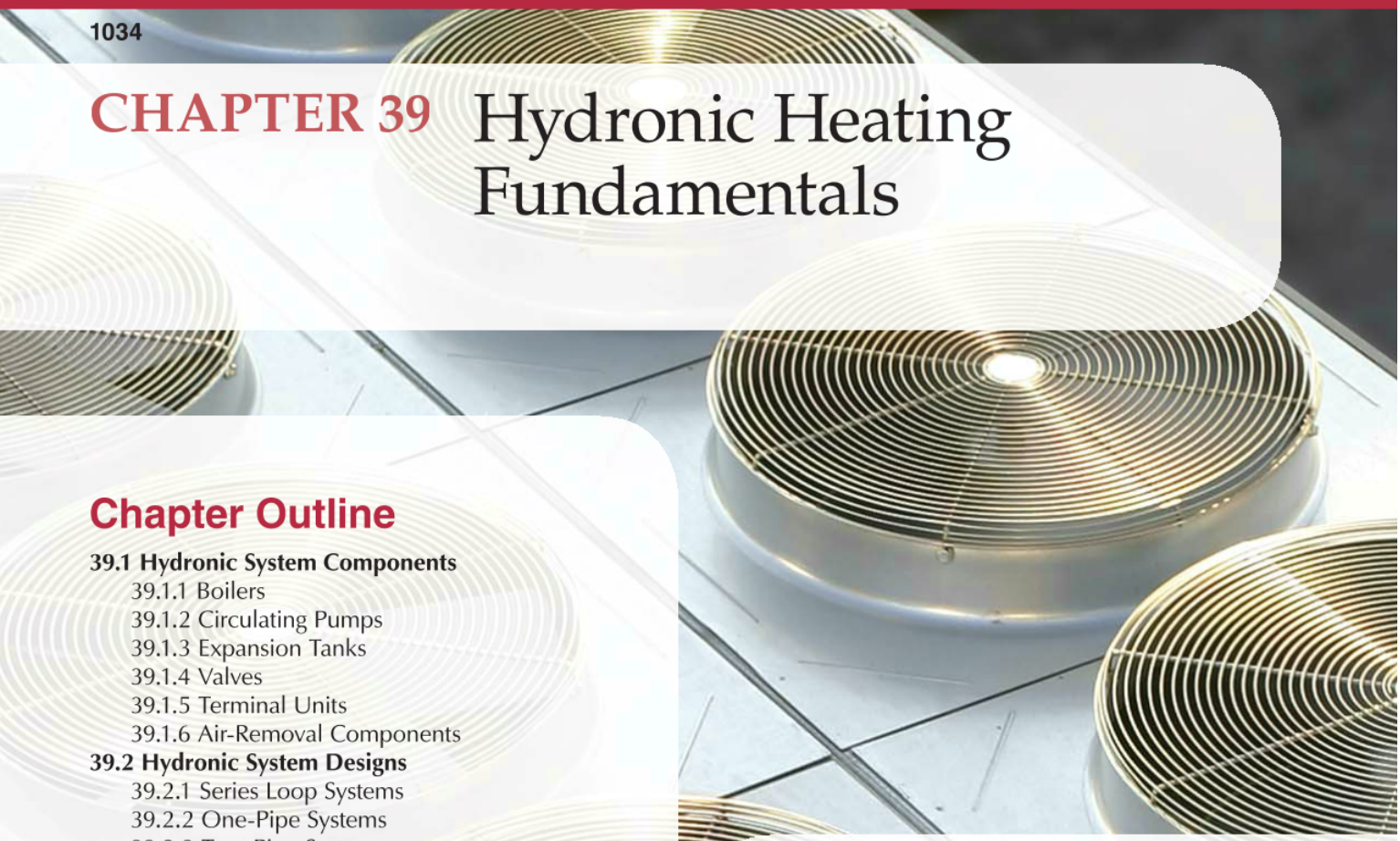

Chapter Outline

39.1 Hydronic System Components
- 39.1.1 Boilers
- 39.1.2 Circulating Pumps
- 39.1.3 Expansion Tanks
- 39.1.4 Valves
- 39.1.5 Terminal Units
- 39.1.6 Air-Removal Components

39.2 Hydronic System Designs
- 39.2.1 Series Loop Systems
- 39.2.2 One-Pipe Systems
- 39.2.3 Two-Pipe Systems
- 39.2.4 Zoned Systems
- 39.2.5 Radiant Hydronic Systems
- 39.2.6 Combined Heating and Cooling Systems
- 39.2.7 Steam Heating Systems
- 39.2.8 Oil-Fired Boilers
- 39.2.9 Gas-Fired Boilers

39.3 Hydronic System Controls
- 39.3.1 Low-Water Cutoff
- 39.3.2 Flow Switch
- 39.3.3 Aquastat
- 39.3.4 Zone Controls
- 39.3.5 Outdoor Reset Control
- 39.3.6 Indoor Reset Control
- 39.3.7 Hydronic System Operating Sequences

39.4 Hydronic System Installation
- 39.4.1 Preparing a System for Initial Start-Up
- 39.4.2 Balancing a Hydronic System
- 39.4.3 Steam Heating System Installation

39.5 Troubleshooting and Servicing Hydronic Systems
- 39.5.1 Boiler Problems
- 39.5.2 Water Circulation Problems
- 39.5.3 Bleeding a Hydronic System
- 39.5.4 Purging a Hydronic System
- 39.5.5 Expansion Tank Problems
- 39.5.6 Other Hydronic System Problems
- 39.5.7 Servicing a Steam Heating System

39.6 Preparing a Boiler for the Heating Season

Learning Objectives

Information in this chapter will enable you to:

- List the basic components of a hydronic system and explain their functions.
- Explain the purpose of hydronic system water treatment.
- Describe the different types of hydronic system designs.
- Summarize the different methods for installing radiant heating systems.
- Identify various controls used in hydronic systems and explain their functions.
- Explain how to balance a hydronic system and prepare it for initial start-up.
- Troubleshoot boiler and water circulation problems in a hydronic system.
- List the steps required to purge series loop systems, one-pipe systems, and zoned systems.
- Perform regular maintenance and service on a steam heating system.
- Inspect a boiler and prepare it for the heating season.

Technical Terms

air-bound
air scoop
air separator
air vent
aquastat
backflow preventer
balanced pressure steam trap
balancing valve
bimetal steam trap
boiler
cavitation
circulating pump
condensing boiler
conventional boiler
corrosion
deaeration
direct return hydronic system
dissolved air
dry-base boiler
dry underfloor radiant heating system
eccentric reducer fitting
embrittlement
entrained air
expansion steam trap
expansion tank
fan convector
flow-control valve
flow switch
free air
high-limit control
hydronic system
impeller
indoor reset control
kickspace fan convector
low-water cutoff (LWCO)
mixing valve
motorized mixing valve
one-pipe hydronic system
outdoor reset control
pressure-reducing valve (PRV)
radiant hydronic system
radiator
reverse return hydronic system
series loop hydronic system
steam heating system
terminal unit
thermostatic mixing valve (TMV)
two-pipe hydronic system
wet-base boiler
wet-rotor centrifugal pump
wet underfloor radiant heating system
zone valve

Review of Key Concepts

Reviewing these concepts from earlier chapters will help you understand new concepts presented in this chapter:

- Boilers use heat exchangers to transfer heat from combustion gases to water in hydronic systems. (Chapter 38)
- Adding heat causes most substances to expand, and removing heat causes them to contract. (Chapter 4)
- Gas-fired and oil-fired heating systems can transfer heat through forced-air, hydronic, or radiant distribution. (Chapter 38)
- Thermostats are wall-mounted devices that use contact points or a circuit to control the operation of heating units. (Chapter 36)

Introduction

Hydronic systems distribute conditioned water or steam to occupied spaces in order to heat or cool those spaces. Since this section of the textbook deals with heating, this chapter focuses on hydronic heating systems rather than hydronic cooling systems, which utilize chillers. Compared to forced-air heating systems, hydronic heating systems offer the following benefits:

- More consistent temperature levels. Even when a hydronic system's pump is not circulating water, the piping still contains heated water that continues to radiate heat. For this reason, temperatures remain steady for longer periods of time in hydronic systems than in forced-air systems.
- Increased heat transfer efficiency.
- Hydronic tubing requires less room than standard air ducts in forced-air systems.
- Less moisture removed from indoor air than in forced-air systems.
- Do not introduce any dust, allergens, or mold into the conditioned space.

Hydronic systems are used in some single-family homes and apartment buildings. The boilers that are used to heat water for hydronic systems may also be used for domestic water heating. Although hydronic systems can be designed to distribute either water or steam, water is now more commonly used than steam. This choice allows the system to be more easily modified to provide comfort cooling with chilled water. Using hot water instead of steam also allows the user to adjust the temperature of the circulating water based on heating demand, which is not possible with steam. The ability to reduce the circulating water's temperature during periods of low demand makes hot-water hydronic systems more efficient than their steam counterparts.

Videos

- Boiler Inspection and Maintenance
- Bleeding a Hydronic System
- Purging a Hydronic System

In some older hydronic systems, steam circulates upward through the system piping by thermal convection and returns to the boiler through the same piping due to gravity. These older systems typically use radiators. Because these systems are unable to control the flow of steam or deliver high rates of heat, they are no longer used. Systems are now designed for individual zone controls. Radiators for single rooms or zones connect to a main pipe supplied by the boiler. These individual zones each have a control valve that allows the temperature of one zone to be adjusted independent of another zone.

39.1 Hydronic System Components

Although a wide variety of hydronic system designs are in use, the same basic components are used in all designs. These basic components include a boiler, piping, and terminal units (heat emitters). The boiler heats the water or steam, the piping carries the hot water or steam to the area in need of heating, and the terminal units release the heat into the conditioned space.

In addition to these essential components, hydronic systems require other components in order to function properly. These additional components include a pump to circulate the water through the boiler, piping, and terminal units. A variety of valves are used to control the flow of water or steam through various parts of the system. An expansion tank provides extra room for water as it is heated and expands. The expansion tank also helps maintain a consistent pressure in the system as the water expands and contracts. Finally, special components may be installed in the system to eliminate excessive amounts of air in the circulating water.

39.1.1 Boilers

A ***boiler*** is a closed vessel that heats water for circulation through a hydronic system. Hydronic boilers often burn fuel to heat or boil water. Some boilers use electric heating elements to boil the water. Boilers can operate with water temperatures ranging from 90°F to 200°F (32°C to 93°C). Boilers can be classified in several ways. One way of classifying boilers is based on operational water temperatures. This method has two classes of boilers: conventional and condensing.

Conventional Boilers

Conventional boilers operate at water temperatures above 140°F (60°C). This high operating temperature prevents combustion gases from condensing. If the water in the boiler drops below 140°F (60°C), it absorbs so much heat that the combustion gases produced by the boiler begin to condense back into a liquid. Upon condensing, combustion gases become highly corrosive. The corrosive condensate that forms inside a conventional boiler reduces its operational life and can result in damage to the flue as well. If a hydronic system is equipped with a conventional, noncondensing boiler, it must include thermostatic controls to ensure that the return water temperature stays above 140°F (60°C), **Figure 39-1**.

Thinking Green

Instantaneous Boilers

Instantaneous boilers are similar to instantaneous, tankless water heaters. In fact, some instantaneous boilers are designed to also provide for domestic hot water needs. These boilers have no tank and heat water only when heat is called for. Because there are no standby heat losses, these types of boilers are much more energy efficient than conventional boilers and may be suitable in certain applications.

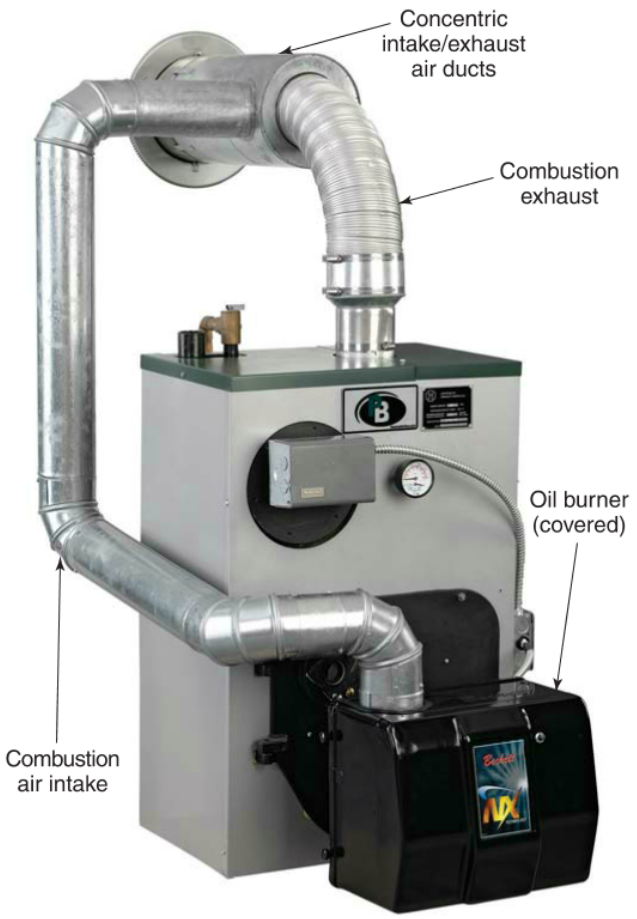

PB Heat, LLC

Figure 39-1. Oil-fired conventional boiler with metal pipe for air intake and exhaust.

Copyright Goodheart-Willcox Co., Inc.

Condensing Boilers

Condensing boilers are designed to condense combustion gases and drain away the condensate. Corrosion caused by condensate is not a problem in condensing boilers because these boilers are designed to withstand the corrosive condensate and drain it away, **Figure 39-2**.

Condensing boilers are equipped with special secondary heat exchangers that remove additional heat from combustion gases, **Figure 39-3**. These secondary heat exchangers must be made of a material that can withstand the corrosive nature of the combustion condensate. These heat exchangers are primarily made of stainless steel. When additional heat is removed in the secondary heat exchanger, the combustion gases condense and release latent heat into the circulating water, further increasing the boiler's efficiency. Condensing boilers are over 90% efficient.

PB Heat, LLC

Figure 39-2. Gas-fired condensing boiler with a 93% efficiency rating. Note the plastic pipe connections for the exhaust vent.

Xylem Inc.

Figure 39-3. Cutaway of a plate heat exchanger made of stainless steel. The corrugated plates provide highly efficient heat transfer.

Condensing boilers may be gas-fired or oil-fired. Because condensing boilers are more efficient than conventional boilers, there is less unburned fuel in the exhaust. As a result, the condensate formed in a condensing boiler is less corrosive than any condensate that may form in a conventional boiler. Condensing boilers can be vented through a wall, roof, or unused chimney and are equipped with a drain connection for condensate removal.

Thinking Green

Condensing Boilers

Condensing boilers are more efficient than conventional boilers. For every pound of combustion gas that is condensed, a condensing boiler produces 970 Btu more heat than a conventional boiler using the same amount of fuel.

Boiler Classifications

A boiler's heat exchanger is typically made of one of three types of material: cast iron, steel, or copper. Boilers are also classified as either wet base or dry base. In ***dry-base boilers***, the area under the combustion chamber is dry. The boiler water is contained in an area above the burner. In ***wet-base boilers***, the water surrounds the combustion area. See **Figure 39-4**.

Cast-iron boilers are frequently used in residential and light-commercial applications and usually hold 15 to 30 gallons of water. Although they require additional time to heat, they are able to maintain heat for extended periods of time.

Copyright Goodheart-Willcox Co., Inc.

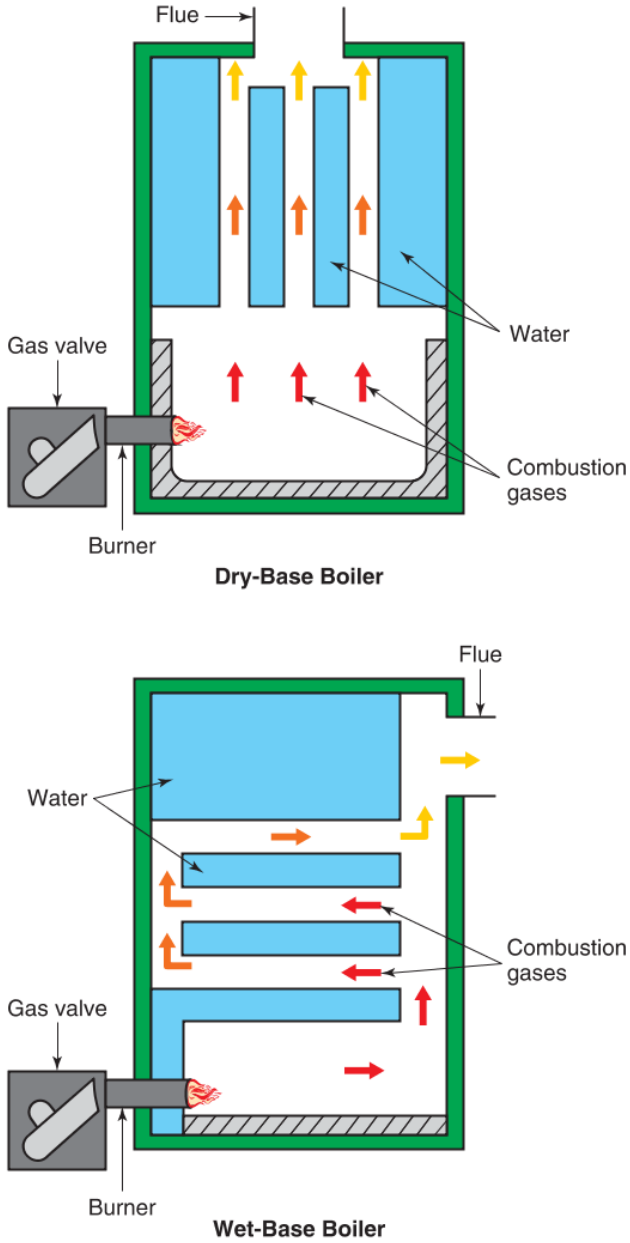

Goodheart-Willcox Publisher

Figure 39-4. The water in a dry-base boiler is contained in an area above the combustion area, whereas the water in a wet-base boiler surrounds the combustion area.

In steel boilers, water flows around a bundle of steel tubes containing combustion gases. Baffles inside the tubes increase heat transfer and slow combustion gases. This allows additional heat to be removed from the gases, increasing efficiency.

Copper-tube boilers use finned copper tubes as heat exchangers. Copper is a good heat conductor, which means these units heat quickly. Copper-tube boilers are classified as low-mass, low-volume boilers because they are much lighter than both cast-iron and steel boilers and typically contain only a few gallons of water.

Code Alert

Boiler Installation

The type of boiler that can be installed and the proper placement and work clearance of a boiler are dictated by local building codes. Building codes also address such issues as proper boiler connections, installation of safety and pressure-relief valves, and selection and installation of expansion tanks. The guidelines provided by the International Mechanical Code (IMC) are often required for commercial construction.

Water Treatment

Certain substances are often added to water in hydronic systems to lower the water's freezing point and raise its boiling point. Glycol is a common additive used to protect against water freezing within a system. There are two types of glycol: propylene and ethylene. The use of ethylene glycol often requires a special permit because it is toxic to humans and less environmentally friendly than propylene glycol.

To figure out how much glycol to add to a hydronic system, determine the system's lowest ambient water temperature and then follow the glycol manufacturer's instructions based on that temperature. In general, a 50% mixture of propylene glycol protects against freezing down to –30°F (–34°C), but also reduces the system's heating capacity to around 90% of its normal heating capacity. Never use glycol intended for automobile cooling systems or in hydronic systems with galvanized piping.

Since tap water has impurities that may cause scale, corrosion, or embrittlement, additional substances may also be added to prevent the formation of deposits in a system. Scale forms when salts in the water settle on metal surfaces as the water undergoes temperature changes. The salts that can be formed include calcium carbonate, magnesium sulfate, sodium hydroxide, silica oxide, and many more. Iron and manganese may also form deposits in the boiler. See **Figure 39-5**. These impurities must be removed before the water enters the boiler. Chemicals can be added to form a sludge with these salts, and boilers are equipped with valves that can be used to purge the sludge from the system.

Corrosion is a chemical degradation of metal. This can occur inside a hydronic system when the water is too acidic or when certain gases are dissolved in the water. Water can be contaminated by organic matter, oil, and dissolved gases, such as hydrogen sulfide, carbon dioxide, and oxygen. Corrosion resulting from

Copyright Goodheart-Willcox Co., Inc.

Maximum Allowable Impurities in Boiler Water		
Chemical Name	**Chemical Symbol**	**Parts per Million (ppm)**
Sodium sulfite	Na_2SO_3	1.0
Sodium chloride	NaCl	10.0
Sodium phosphate	Na_3PO_4	25.0
Sodium sulfate	Na_2SO_4	25.0
Silica oxide	SiO_2	0.2
Total dissolved solids		50.0

Goodheart-Willcox Publisher

Figure 39-5. Maximum levels of certain impurities in boiler water, listed in parts per million (ppm).

these contaminants can be reduced by neutralizing the acidic water with an alkali or by removing the gases through deaeration. ***Deaeration*** is the release of gases dissolved in a liquid. Chemical scavengers and corrosion inhibitors can also be added to the water to help prevent corrosion. Chemical scavengers are chemicals that interact chemically with the contaminants, rendering them inert. Corrosion inhibitors are chemicals that form a protective coating on the surface of the metal. Both types of additives are widely available at contracting supply houses, and some companies even specialize in the treatment of boiler water.

Long-term corrosion can cause embrittlement of system parts. ***Embrittlement*** is a weakening of the metal, which can cause structural failure along seams, under rivets, and at tube ends. Water may flash to steam through small leaks in these highly stressed areas. This allows any sodium hydroxide in the water to concentrate, which in turn speeds up further corrosion. Embrittlement can be slowed by maintaining a low acidity in the water, repairing leaks, and adding special inhibiting agents to the water. The water in a hydronic system should have a pH level between 7 and 10.

39.1.2 Circulating Pumps

Although some older hydronic systems circulate hot water through natural convection, the majority of systems use a circulating pump to circulate heated water throughout the system. A ***circulating pump*** is a motor-driven pump that controls water flow through hydronic system piping, **Figure 39-6**.

Circulating pumps consist of a motor section (containing the rotor, motor windings, and terminal box) and a pump housing (containing the impeller, seal ring, and water passages). An ***impeller*** is the part

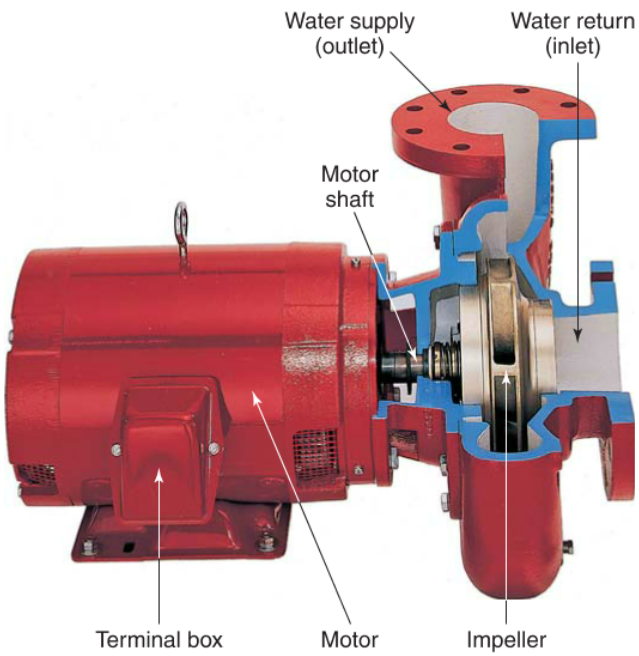

Xylem Inc.

Figure 39-6. Cross section of a circulating pump used in a residential hydronic system.

of the pump that spins and forces water through the system. Circulating pumps are often wet-rotor centrifugal pumps. A ***wet-rotor centrifugal pump*** has bearings that are lubricated by the circulating water in the hydronic system rather than a petroleum-based lubricant. The wet-rotor design eliminates the need for a shaft seal and reduces noise and maintenance requirements. Many types of circulating pumps are used in hydronic systems, and some systems have more than one pump.

39.1.3 Expansion Tanks

To cope with the heat-related expansion of water, hydronic systems include an ***expansion tank***, sometimes referred to as a *compression tank*. In an expansion tank, one side of the tank is filled with water and connected to the hydronic system piping. The other side of the tank is filled with air, **Figure 39-7**.

The two sides of the tank may be separated by a rubber diaphragm, or the water may be contained in a rubber bladder inside the tank and the air stored in the space between the bladder and the shell of the tank. As the water in the system heats up and expands, excess water is forced into the expansion tank, where it applies pressure to the diaphragm or bladder and compresses the air. When the temperature of the water drops, the water contracts. This allows the air surrounding the

Copyright Goodheart-Willcox Co., Inc.

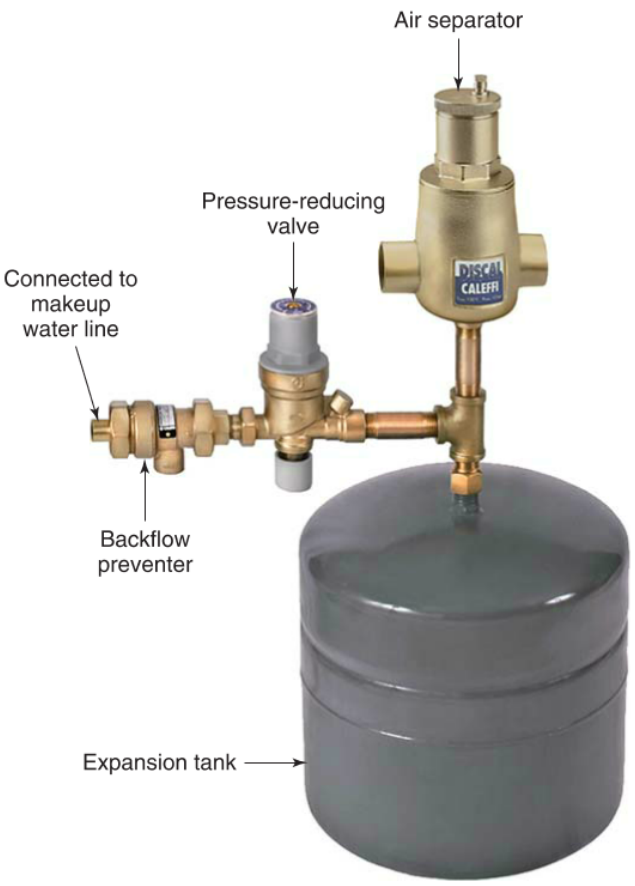

© 2012 Caleffi North America, Inc.

Figure 39-7. Expansion tank kit that combines multiple boiler components into a single package.

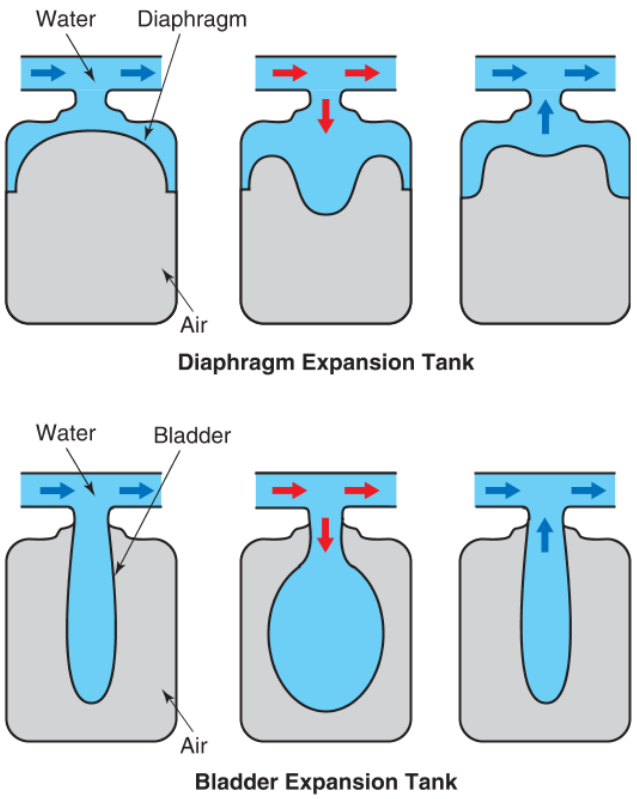

Goodheart-Willcox Publisher

Figure 39-8. An expansion tank provides room for the expansion of circulating water as the system heats up. As the water cools down again, air pressure forces the water back into the system.

bladder or on the other side of the diaphragm to exert pressure to expel some of the water back into the system. See **Figure 39-8**. In this way, an expansion tank helps to maintain a stable system pressure under varying operating conditions.

Many bladder and diaphragm expansion tanks are equipped with an air fitting that can be used to pump air into the tank to adjust the system pressure. Others are precharged to 12 psi at the factory and cannot be recharged or adjusted.

Caution

Charging an Expansion Tank

Extreme care should be used if air is added to a diaphragm or bladder expansion tank. Excessive air pressure can rupture the diaphragm or bladder. Never use an air compressor or compressed air tank to add air to an expansion tank. Use only a bicycle pump and check the pressure in the expansion tank frequently during the procedure.

In older expansion tank designs, there is no physical barrier between the water and the air. These older expansion tanks are horizontally oriented to provide a larger air space above the water reservoir. They are also considerably larger than diaphragm or bladder expansion tanks. The older-style expansion tanks are always mounted above the boiler, such as in the attic or between floor joists, **Figure 39-9**.

Older expansion tanks are typically equipped with a combination valve at the bottom of the tank. The combination valve allows water to be drained from the tank and allows air to enter the tank at the same time.

An expansion tank can be mounted on either the supply or the return side of the system. However, it is vitally important that the circulating pump circulates water away from the expansion tank rather than toward the tank. See **Figure 39-10**.

39.1.4 Valves

A hydronic system requires numerous valves to function properly. These valves control the flow of

Copyright Goodheart-Willcox Co., Inc.

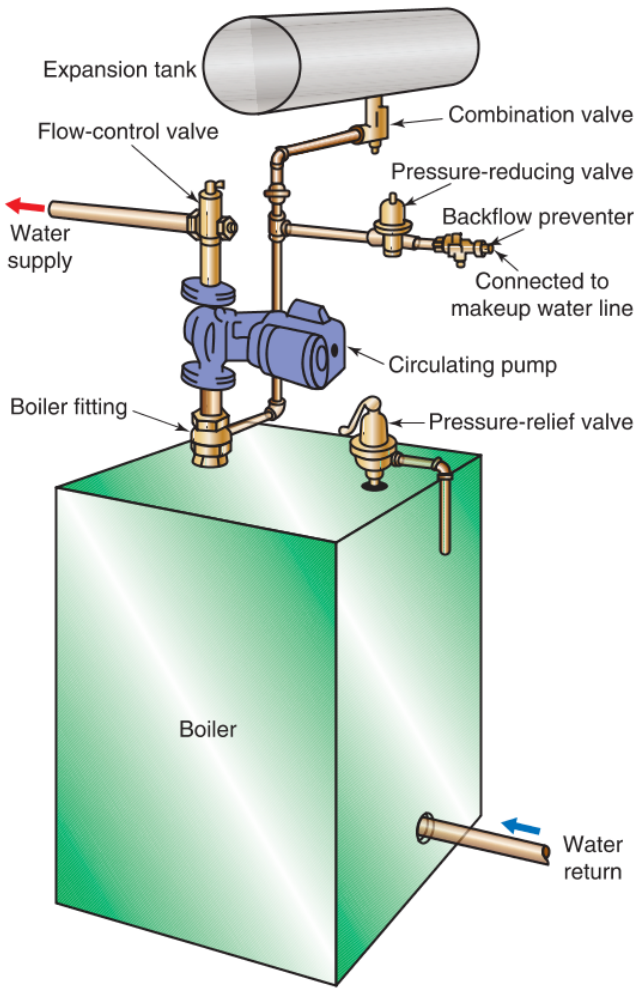

Goodheart-Willcox Publisher

Figure 39-9. An older-style, horizontal expansion tank mounted above a boiler.

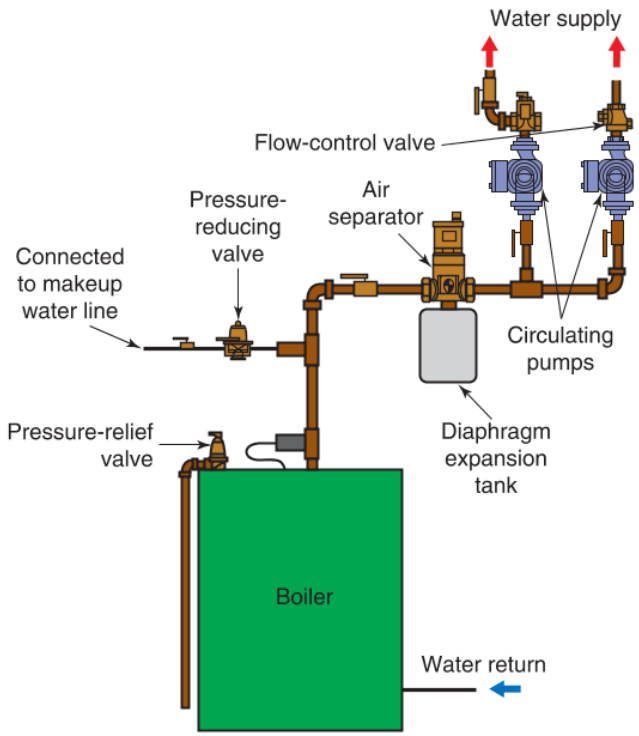

Xylem Inc.

Figure 39-10. Circulating pumps must pump away from an expansion tank located on the supply side of the boiler. Expansion tanks can also be located on the return side.

© 2012 Caleffi North America, Inc.

Figure 39-11. Mixing valves may be used to ensure that water is returned to the boiler at the proper temperature.

water through the system. Some of the valves commonly found in hydronic systems include mixing valves, flow control valves, pressure-reducing valves, and backflow preventers.

Mixing Valves

A ***mixing valve*** is a valve that blends hot water from one inlet with cooler water from another inlet so that the water leaving the valve is at the desired temperature. See **Figure 39-11**.

Mixing valves can be used to adjust the water temperature in a hydronic system. The valve reacts to changes in the temperature of the water by opening and closing its internal passages, which changes the ratio of hot water and cold water flowing through the valve. This constant adjustment ensures that the water leaving the valve is the correct temperature.

Most mixing valves are thermostatically or electronically operated. A ***thermostatic mixing valve (TMV)*** has a built-in thermostatic element that reacts mechanically to changes in the temperature at the valve outlet,

Copyright Goodheart-Willcox Co., Inc.

adjusting the mixture ratio as needed to maintain the desired temperature, **Figure 39-12**.

A ***motorized mixing valve*** accomplishes the same task, but has an electronic sensor that monitors the water temperature and a built-in electric motor that adjusts the valve as needed based on sensor feedback.

Some mixing valves are rotary valves that have handles for manually adjusting the mixture of hot and cold water. A motor actuator can also be used to adjust the valve position. The motor actuator is mounted on the manually operated rotary valve so that the valve's shaft engages a drive sleeve on the actuator. When the actuator receives a signal to adjust the valve, the motor and drive sleeve rotate, which in turn operates the valve shaft, **Figure 39-13**.

Mixing valves can be installed at the boiler inlet to monitor the return water temperature or at the boiler outlet to monitor the supply water temperature. Mixing valves are typically used with conventional boilers to keep the return water above a certain temperature to prevent combustion gases from condensing, **Figure 39-14**.

For a return water installation, if the water returning to the boiler is below the set temperature, the mixing valve will allow some of the hot supply water leaving the boiler to flow with the return water. Mixing the hot supply water with the cool return water raises the temperature of the return water above the combustion gas condensing point.

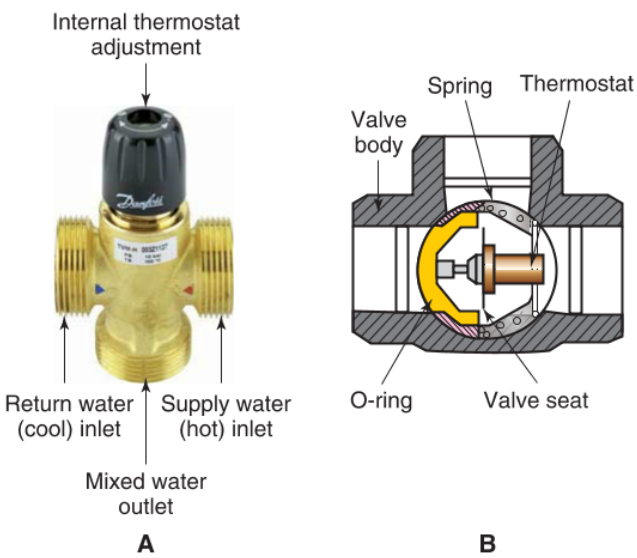

Danfoss

Figure 39-12. Three-way thermostatic mixing valves (TMVs). A—The hot and cold water supplied at the valve's inlets are mixed inside the valve to provide a steady flow of water at the desired temperature. B—Cutaway showing the internal construction of a TMV. As the temperature of the water in the valve changes, the thermostatic element opens and closes the valve, changing the ratio of return water to supply water.

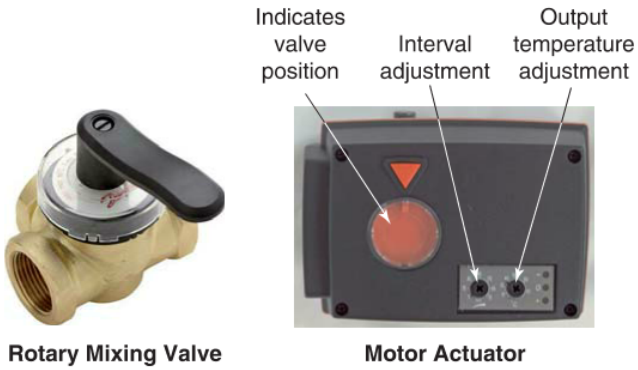

Danfoss

Figure 39-13. A rotary mixing valve and motor actuator designed for use with the valve. A sensor placed downstream triggers the actuator to open or close the valve in response to variations in water temperature.

For a supply water installation, if the water leaving the boiler is not yet hot enough to flow through the lines and maintain a temperature above the combustion gas condensing temperature, the mixing valve recirculates the water through the boiler. When the supply water is above the set temperature, the mixing valve allows it to flow through the system. Some common settings for mixing valves are 140°F (60°C) for return water installations and 160°F (71°C) for supply water installations.

Balancing Valves

A hydronic system may deliver hot water to more than one terminal unit. If there are two or more terminal units, the water flow must be balanced to help distribute the heat equally through the system. Otherwise, the terminal units closest to the circulating pump will "steal" most of the heat, and those farther away will not receive their designed quantity of heated water. To address this problem, ***balancing valves*** are installed in the system. These valves adjust the water flow to each terminal unit or zone in the system so that heat is evenly distributed throughout the system, **Figure 39-15**.

Balancing valves are commonly built using globe valves or ball valves. Which type of valve is used may depend on system capacity, size, and other factors. A flow indication device may be used to observe balancing of the flow, **Figure 39-16**.

Pressure-Reducing Valves

Proper operating pressure must be maintained in a hydronic system. If a system starts to run low on water, makeup water is supplied by a connection to a water main. The pressure in the water main is typically much higher than is required for the hydronic system.

Copyright Goodheart-Willcox Co., Inc.

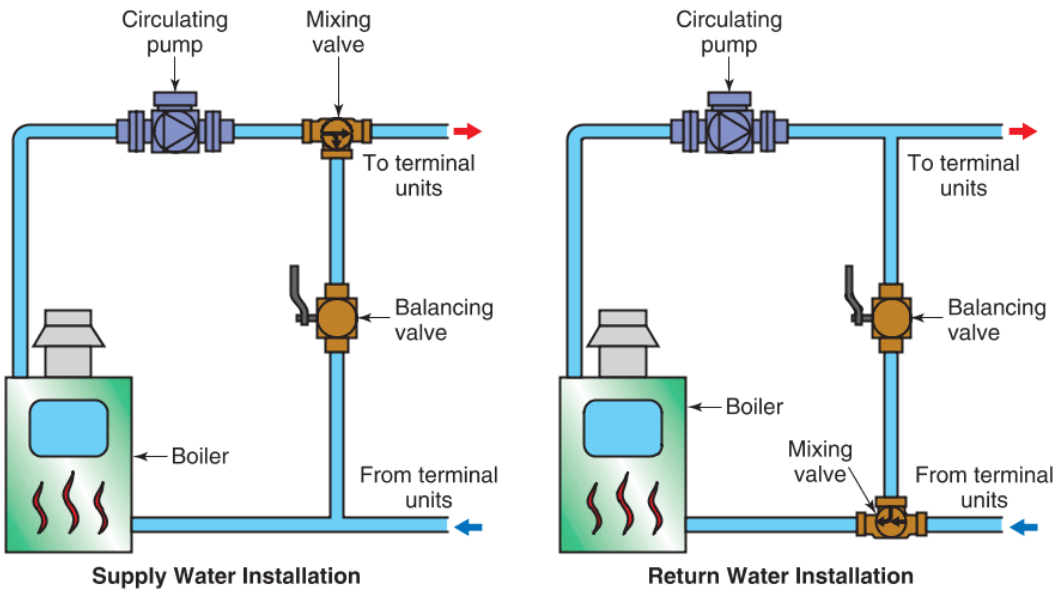

Goodheart-Willcox Publisher

Figure 39-14. Mixing valves can be mounted in either the return line to the boiler or the supply line from the boiler.

Xylem Inc.

Figure 39-15. With a balancing valve installed in a hydronic system, the system can be balanced so that heated water flows evenly to every terminal unit. This balancing valve has two access ports that allow a technician to measure the valve's pressure drop.

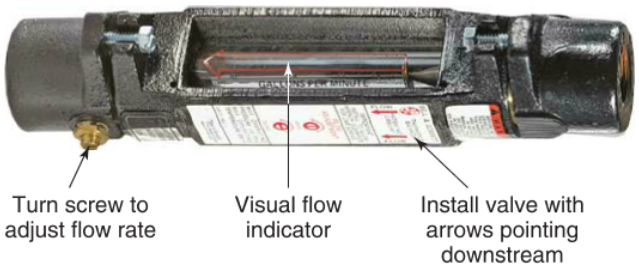

Xylem Inc.

Figure 39-16. A flow indication device that may be used with a balancing valve in a hydronic system.

A ***pressure-reducing valve (PRV)*** is installed in the makeup water line to the boiler to reduce the pressure of the water supplied by the water main to the operating pressure needed by the hydronic system. It acts as a feed valve and also reduces pressure as needed, **Figure 39-17.**

11

Pro Tip

Valve Names

Like the rest of the HVACR industry, the hydronic industry can have multiple names for a single system component. The phrase *pressure-reducing valve* describes the action that the valve has on incoming water. However, since that is only part of its purpose, it may also be known as a *boiler feed valve*, a *boiler fill valve*, and other names. Always clarify what you mean and ask others for clarification.

Copyright Goodheart-Willcox Co., Inc.

Xylem Inc.

Figure 39-17. A pressure-reducing valve helps a hydronic system maintain a preset pressure by allowing makeup water from a water main into the system as needed. Some valves have a handle that facilitates fast filling when a substantial amount of water must be added to a system.

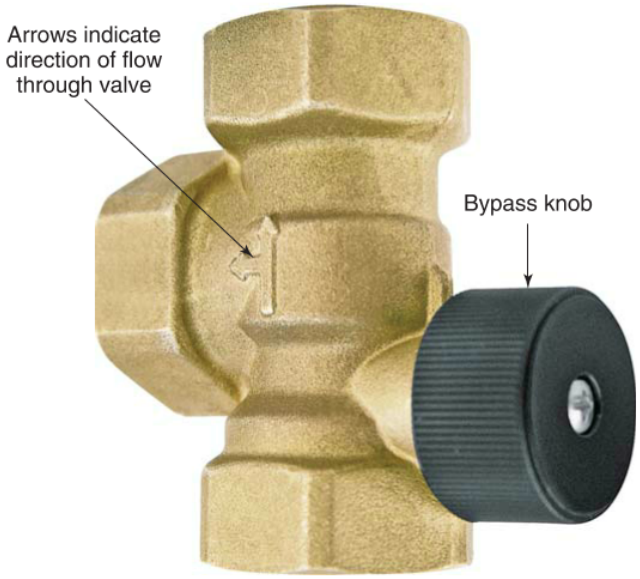

Xylem Inc.

Figure 39-18. A flow-control valve prevents gravity circulation in a hydronic system, which occurs when heated water migrates to higher points in the system, causing rooms or zones located at those higher points to become overheated.

Flow-Control Valves and Backflow Preventers

A typical hydronic system includes a variety of ***flow-control valves*** to ensure that water flows in the proper direction through the system. When the circulating pump quits operating, hot water tends to migrate to higher points in the system, and cold water tends to fall to lower points in the system. Flow-control valves prevent this from happening. Flow-control valves are essentially weighted check valves. Some flow-control valves have a bypass knob or lever on the valve that can be used to open the valve to allow gravity circulation in an emergency, **Figure 39-18**.

Pro Tip

Flow-Control Valve Sizing

Usually flow-control valves are matched to piping size. However, if a system is equipped with a boiler that heats up very quickly, it may be necessary to use oversized flow-control valves to compensate for thermal expansion.

A ***backflow preventer*** is a specialized check valve installed in the makeup water line to prevent water in the hydronic system from flowing back into the water main. This can occur if the pressure in the water main drops below the pressure in the hydronic system. Since fluids flow from a higher pressure to a lower pressure, water will try to flow out of the higher-pressure hydronic system into the lower-pressure water main. In addition to backflow preventers, many pressure-reducing valves, which are also installed in the makeup water line, contain a check valve that prevents water from flowing back into the water main.

39.1.5 Terminal Units

Terminal units, also referred to as *heat emitters*, are the heat exchangers that transfer heat from the circulating water in a hydronic system to the air in the conditioned spaces. A variety of terminal units are used in hydronic systems. The terminal units that transfer heat through a combination of conduction and convection are covered in this section. Hydronic systems can also transfer heat through a combination of conduction and radiation. These systems are referred to as radiant heating systems and are discussed later in this chapter.

Convection-based terminal units all work the same way. The hot water inside the hydronic system transfers some of its heat to air passing over the heating element within the terminal unit. This warmed air circulates throughout the conditioned space, raising the temperature in the space. Convection heating elements are generally constructed of materials with a high

Copyright Goodheart-Willcox Co., Inc.

thermal conductivity, such as copper and aluminum. A typical heating element consists of copper tubing to which aluminum cooling fins have been attached. The cooling fins increase the surface area over which the heat transfer takes place.

Radiators

In hydronic systems, a ***radiator*** is a heat exchanger that hot water or steam flows through. The radiator absorbs heat from the water or steam and then transfers that heat to the conditioned space. Despite its name, this type of terminal unit provides the majority of its heat to the conditioned space through natural convection rather than radiation. Radiators are available for both steam and hot-water hydronic systems and come in a variety of shapes and sizes. See **Figure 39-19**.

Pro Tip

Radiator Selection

Radiators that are designed specifically for hot-water hydronic systems typically cannot be used in a steam system. However, most radiators designed for steam systems can also be used in hot-water systems.

Fan Convectors

Another option for effective and economical hydronic heating is the ***fan convector***. A fan convector is very similar to a radiator. However, it is equipped with a fan that blows air across the surface of the heating element, which increases the rate of heat transfer and improves convection. Because of the high volume of air that passes over its surface, a fan convector is able

Column Radiator

Panel Radiator

Baseboard Radiator

Runtal North America; Bosch Thermotechnology Corp.; Runtal North America

Figure 39-19. Radiators are available in many configurations, such as column, panel, and baseboard.

Copyright Goodheart-Willcox Co., Inc.

to extract heat from lower-temperature water than a radiator, which relies on natural convection.

Fan convectors are available in many sizes and shapes. ***Kickspace fan convectors*** are designed to fit into very tight places, such as in the small space under kitchen and bathroom cabinets, in stair risers, and in between floor joists. Kickspace fan convectors work well in zoned applications and in combination with radiant heating systems, **Figure 39-20**.

Fan convectors may also be used in some forced-air applications. For instance, a fan convector can use hot water from a hydronic system to preheat makeup air before it is drawn in and heated by a forced-air furnace, **Figure 39-21**.

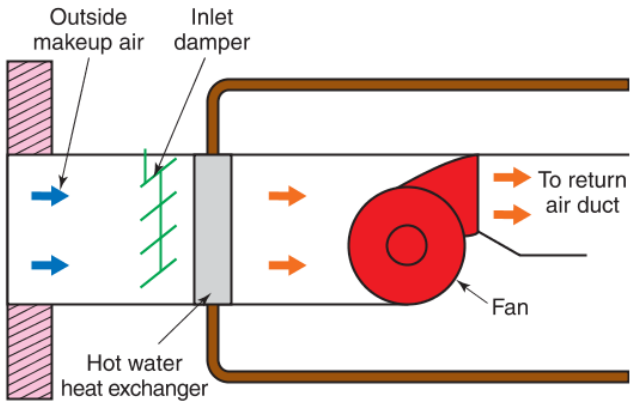

Goodheart-Willcox Publisher

Figure 39-21. A hydronic system can feed hot water to a fan convector to preheat makeup air before it is circulated through a forced-air furnace.

39.1.6 Air-Removal Components

Air must be removed from the circulating water in a hydronic system. If it is not removed, air in the system can result in noisy operation or prevent the proper flow of water through the piping. Also, oxygen in the air can cause corrosion within the piping and other parts of the hydronic system. Corrosion can block pipes or valves and clog pumps, rendering the system inefficient or even inoperative.

The air in a hydronic system falls into three categories. The first type is called ***free air***. Free air consists of bubbles of air that collect at the high points in a hydronic system. One-way valves called air vents are used to release any free air trapped in a system.

The second type of air that can be trapped in a hydronic system is called ***dissolved air***. This is air that is trapped between molecules of the circulating water. Air scoops or air separators can be installed to reduce the amount of dissolved air in a system.

The third type of air that can be trapped is called ***entrained air***, which consists of small air bubbles that travel along with the circulating water. Entrained air can be removed with air scoops and air separators as well.

Water's ability to hold dissolved oxygen is inversely proportional to its temperature and directly proportional to its pressure. In other words, water at a colder temperature or a higher pressure can hold more dissolved oxygen than water at a warmer temperature or

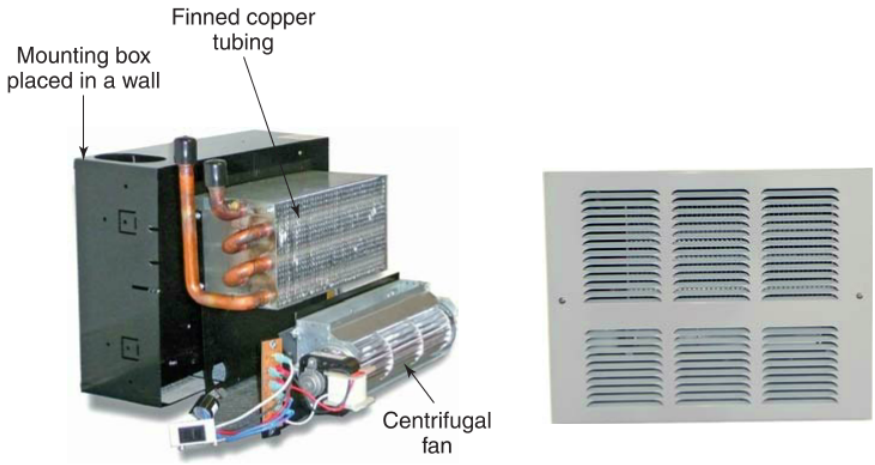

Kickspace Fan Convector **Grille**

King Electrical Mfg. Co.

Figure 39-20. A kickspace fan convector is typically mounted in a wall just above floor level and covered with a grille to look like a regular vent.

Copyright Goodheart-Willcox Co., Inc.

lower pressure. As the temperature of water is increased or as the water pressure is reduced, dissolved oxygen in the water bubbles out and becomes free or entrained air. Air separators and air scoops are typically placed downstream from the boiler and upstream from the circulating pump. At this location, the circulating water has a relatively high temperature and low pressure, improving the ability of an air separator or air scoop to remove dissolved oxygen.

Air vents are float-operated valves that allow air to escape from a system while preventing water from leaking out and outside air from coming in. As air collects in the float chamber, the float drops, opening the valve and allowing air to escape out of the system. As the air escapes, water refills the float chamber, closing the valve. See **Figure 39-22**.

Air vents are installed at high points in a hydronic system where large pockets of air are likely to form, such as at the top of vertical piping. They are also installed on top of air scoops and air separators to vent the air separated by those devices.

Air scoops have a series of deflectors that create turbulence in the flow of water. This turbulence causes oxygen in the water to form tiny bubbles, which adhere to the deflectors. As more and more bubbles are formed, they begin to merge, forming larger bubbles that rise to the top of the chamber. The deflectors also catch any entrained air in the water flow and deflect it upward to the top of the chamber. See **Figure 39-23**.

Air separators work on essentially the same principle as air scoops. Air separators typically contain a wire mesh element, which creates a swirling motion in the circulating water. This agitation causes oxygen in the water to form tiny bubbles, which cling to the wire mesh. As more bubbles are collected, they merge together and form larger bubbles, which break free of the mesh and rise to the top of the chamber, where they are vented. See **Figure 39-24**.

When air is removed from a hydronic system, makeup water is added to the system to fill the space. This water contains dissolved oxygen plus some corrosive chemicals. Most hydronic systems are set up so that the makeup water passes through an air separator before it is circulated through the system.

39.2 Hydronic System Designs

Hydronic systems can be designed in a variety of ways to meet specific heating needs. A system can use heated water or steam as the convection medium, and boilers can be operated using gas or oil as the heat source. In addition, hydronic systems can vary in the way piping is configured. Most hydronic systems are closed loops, meaning that water in the system flows from the boiler, through the terminal units, and back to the boiler through a loop of piping that is completely sealed from atmospheric pressure. If the system is open to atmospheric pressure at any point, it is considered an open-loop system.

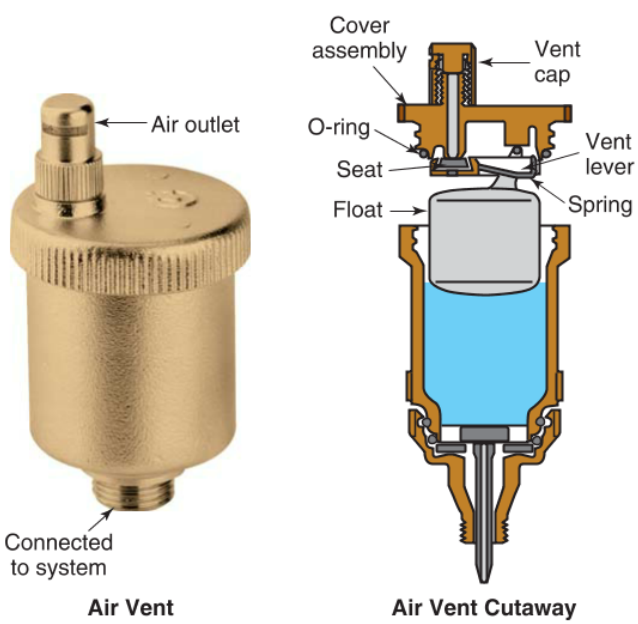

© 2012 Caleffi North America, Inc.; Honeywell, Inc.

Figure 39-22. An air vent releases air from a hydronic system by using a float to open the valve outlet when the water level drops inside the valve.

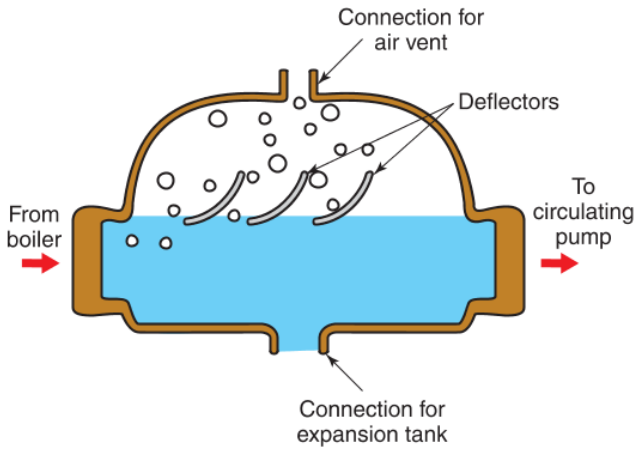

Goodheart-Willcox Publisher

Figure 39-23. The series of deflectors in an air scoop create turbulence that causes oxygen in the water to form into tiny bubbles.

Copyright Goodheart-Willcox Co., Inc.

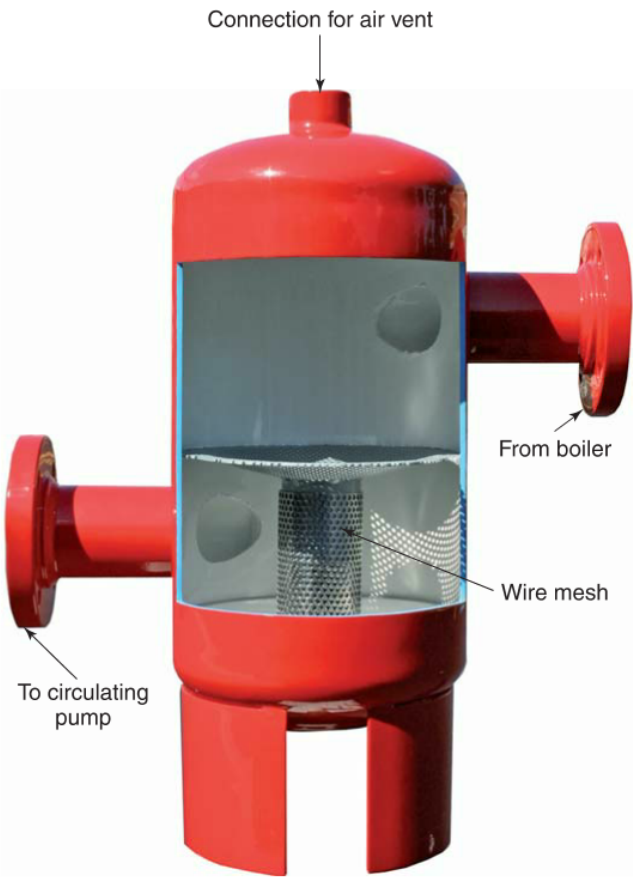

Xylem Inc.

Figure 39-24. An air separator uses a wire mesh to create turbulence that causes oxygen in the water to form into tiny bubbles that combine and rise up to be vented.

39.2.1 Series Loop Systems

A ***series loop hydronic system*** is designed so that all of the circulating water passes through each component in the system before returning to the boiler. Series loop systems are typically equipped with baseboard terminal units. As the water passes through each terminal unit in the system, the water's temperature is reduced. In order to compensate for the dropping temperature of the water, each successive terminal unit in the system must be larger than the previous unit, **Figure 39-25A**.

Large systems can be divided into two loops for improved efficiency. Splitting a large, single loop into two smaller loops reduces the overall distance that the circulating water must travel and the number of components it passes through. As a result, the overall temperature drop in the circulating water is reduced. In a split series loop, each loop receives some of the hot water from the boiler. Balancing valves in the return piping for each loop can be adjusted to change the ratio at which water is distributed between the two loops, **Figure 39-25B**.

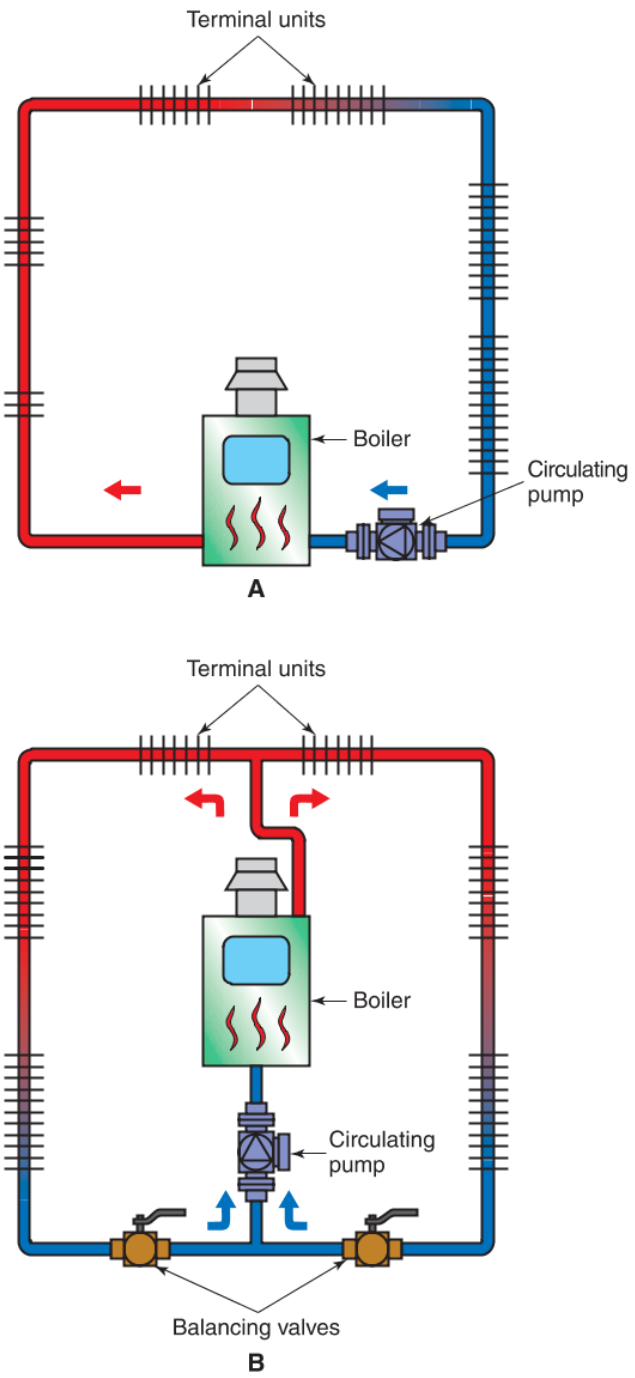

Goodheart-Willcox Publisher

Figure 39-25. In a series loop system, all of the circulating water must pass through each of the terminal units in the loop. A—Single series loop. B—Split series loop.

39.2.2 One-Pipe Systems

In a ***one-pipe hydronic system***, as in a series loop system, a single pipe supplies hot water from the boiler and carries the return water back to the boiler. However,

Copyright Goodheart-Willcox Co., Inc.

unlike a series loop system, the terminal units in a one-pipe system are on branch circuits, called secondary loops. This means that all of the water flows through the primary loop, but not all of the water flows through each terminal unit, **Figure 39-26**.

A low pressure created in each secondary loop allows a portion of the circulating water to be diverted from the primary loop (also called the main loop). This diverted water flows through the secondary loop and then back to the primary loop. Low pressure is created in each secondary loop by connecting the return side of each terminal unit to the primary loop with a tee that has an internal venturi. The venturi restricts flow through the primary loop at that point, which creates a low pressure on the return side of the terminal unit. As a result, some of the water flows straight through the primary loop while the remainder is diverted through the secondary loop and terminal unit. The supply side of each terminal unit is connected to the primary loop by a standard tee fitting.

Since each successive terminal unit is receiving a portion of the return water from the previous terminal unit, the water supplied to each successive terminal unit is slightly cooler than the water supplied to the previous one. However, since not all of the circulating water passes through every terminal unit, the progressive temperature drop in the water is less than it would be in a series loop system.

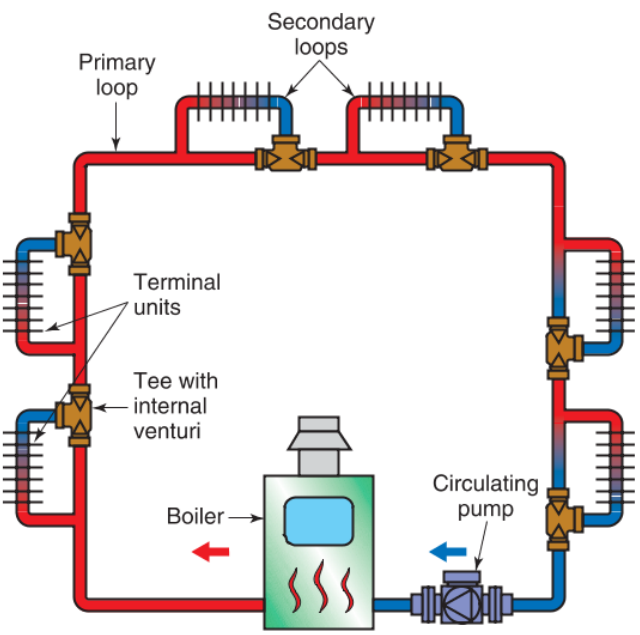

Goodheart-Willcox Publisher

Figure 39-26. In a one-pipe system, tees equipped with an internal venturi create a low pressure on the return side of each terminal unit. This causes some of the water to be diverted through the terminal unit while the rest flows through the primary loop.

39.2.3 Two-Pipe Systems

Most hydronic systems are two-pipe systems. In a ***two-pipe hydronic system***, one pipe supplies hot water from the boiler to the terminal units. Another pipe carries return water from the terminal units back to the boiler. Since the supply and return pipes are completely separate, the temperature of the water supplied to all terminal units is essentially the same. This design eliminates the progressive temperature drop that occurs in series loop and one-pipe systems. A more consistent heat is available at the terminal units of a two-pipe system than the other arrangements available.

There are two types of two-pipe systems: direct return and reverse return. In a ***direct return hydronic system***, the water is returned to the boiler along essentially the same path it followed when it was supplied to the terminal unit. The terminal unit that is closest to the boiler has the shortest length of supply piping and also the shortest length of return piping. The terminal unit that is farthest away from the boiler has the longest length of supply piping and the longest length of return piping. See **Figure 39-27A**.

Due to friction, the pressure drop is greater in the longer branches. As a result, water flows at a different rate through each branch. This requires the system to be balanced.

In a ***reverse return hydronic system***, the terminal unit that is closest to the boiler has the shortest length of supply piping but the longest length of return piping. The terminal unit that is farthest from the boiler has the longest length of supply piping, but the shortest length of return piping. As a result, all branches of the system are approximately the same length. Because all branches are equal lengths, they have approximately equal pressure drops, and water flows at the same rate through each branch. Very little adjustment is needed to balance such a system, **Figure 39-27B**.

39.2.4 Zoned Systems

In many commercial and industrial buildings, it is desirable to maintain different temperatures in different rooms or areas. This is also desirable in some homes. For instance, the bedrooms may be kept at a different temperature than the living room, or the laundry room may be kept at a different temperature than the kitchen. Individual temperature control in different spaces is made possible by splitting a hydronic system into different zones. Each zone has its own piping branch, terminal units, zone valve, and room thermostat, **Figure 39-28**.

Copyright Goodheart-Willcox Co., Inc.

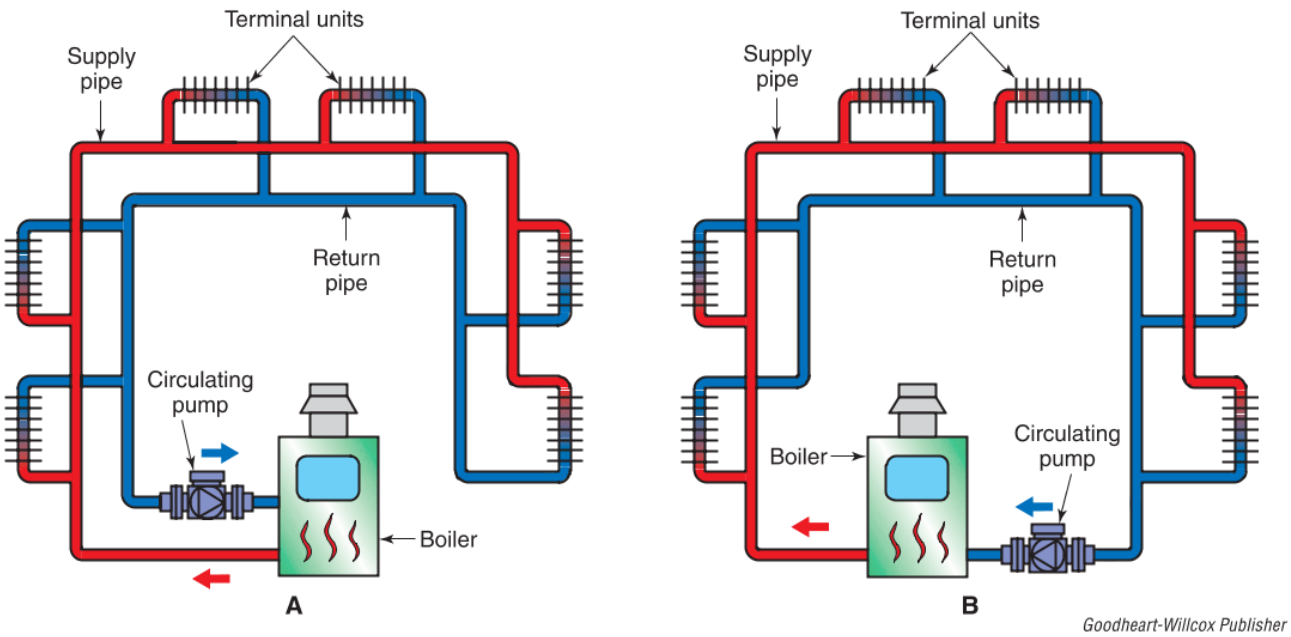

Figure 39-27. A two-pipe system has a supply pipe and a return pipe. The water delivered to each terminal unit is approximately the same temperature. A—Direct return hydronic system. B—Reverse return hydronic system.

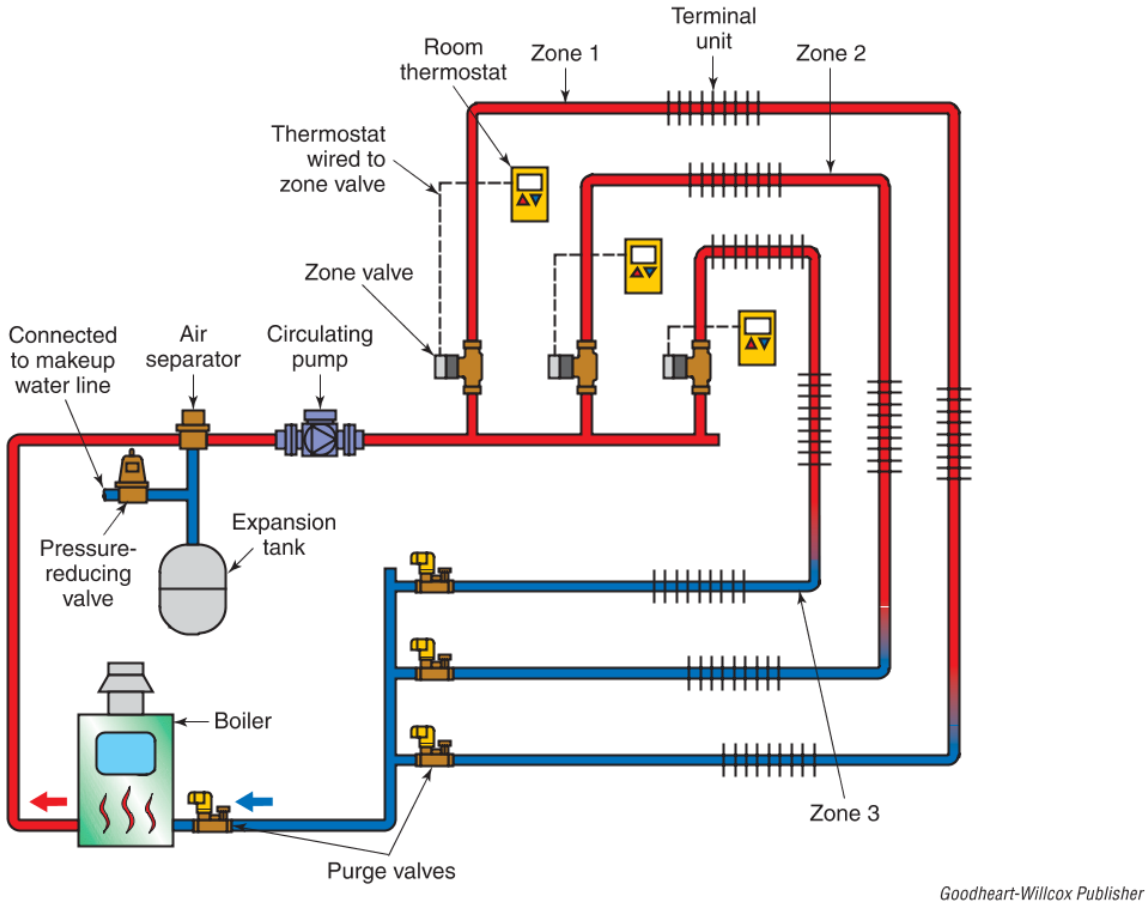

Figure 39-28. A hydronic system with three zones, each of which has its own zone valve, terminal unit, and room thermostat.

Copyright Goodheart-Willcox Co., Inc.

The temperature in each zone can be adjusted using a room thermostat and a zone valve. A ***zone valve***, also called a *zone control valve*, is a thermostatically operated valve that regulates the flow of heated water through a zone based on the voltage signal applied to it. A zone valve's actuator has wiring that connects to a room thermostat, **Figure 39-29**.

When the thermostat senses that a zone's control point is below its set point, it sends a signal for heat that causes the actuator to open a solenoid or plunger inside the valve body, allowing heated water to flow through the zone. If a zone has its own circulating pump, the zone valve may also close a switch that starts the pump to circulate heated water through the zone. After the zone's temperature rises above the set point, the thermostat closes the zone valve or slows down the circulating pump to reduce water flow through the zone. The result is that the appropriate amount of hot water enters the terminal units to maintain the set point temperature in each zone, **Figure 39-30**.

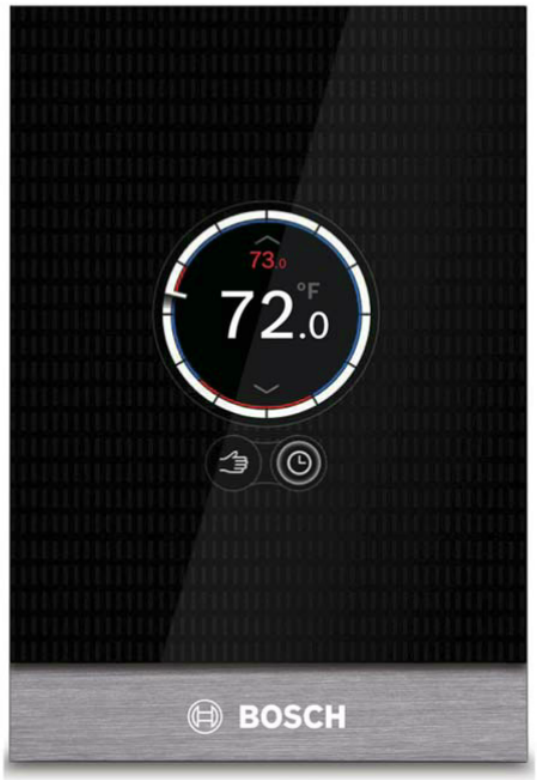

Bosch Thermotechnology Corp.

Figure 39-30. Modern, smart, programmable room thermostats can display indoor temperature, outdoor temperature, desired set point, system status, and energy consumption levels.

39.2.5 Radiant Hydronic Systems

Radiant hydronic systems are similar to standard hot-water hydronic systems in that hot water is circulated through a network of pipes. However, the piping in a radiant hydronic system is typically enclosed in walls or floors, completely out of sight. The piping in a traditional hydronic system connects to external terminal units in the conditioned spaces. Radiant hydronic systems also circulate water at a lower temperature than traditional hydronic systems.

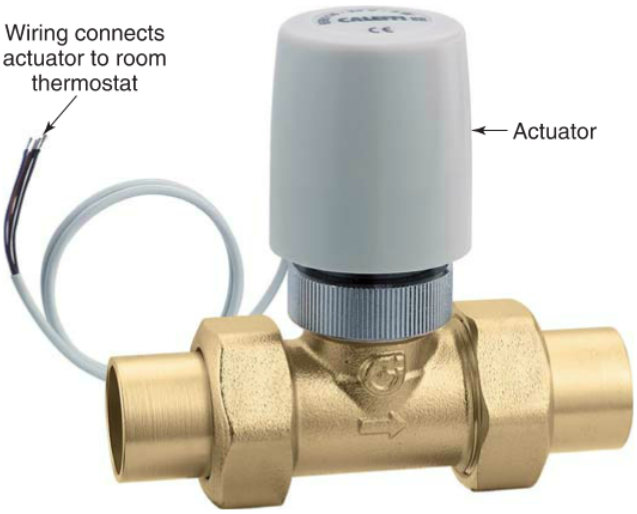

© 2012 Caleffi North America, Inc.

Figure 39-29. The actuator on a zone valve opens and closes the valve when it receives a voltage signal from a room thermostat.

Whereas traditional hydronic systems use copper water tubing, radiant hydronic systems often use different types of tubing. This tubing may be made from cross-linked polyethylene (PEX), other plastics, and composite material, **Figure 39-31**.

Tubing made from plastic or composite material must have an oxygen barrier to be used in a radiant hydronic system. The barrier prevents oxygen from being absorbed through the tubing, which can rapidly corrode the boiler. Red PEX tubing is typically used

Danfoss

Figure 39-31. Radiant heating system tubing can be made from plastic or composite material.

Copyright Goodheart-Willcox Co., Inc.

for hot water, and blue PEX tubing is typically used for cold water. There are no physical differences between the different colors. They are only used to indicate the temperature of the water in the tubing.

In radiant hydronic systems, a boiler heats up water, and a pump circulates the hot water through a network of plastic tubing. Separate radiant heat zones are fed by a manifold that distributes the flow of warm water to the individual loops of tubing that comprise each zone. The loops of tubing warm the surfaces adjacent to them, usually floors or walls, by conduction. The warmed floors or walls then radiate the heat into the conditioned space, **Figure 39-32**.

Code Alert

Radiant Hydronic Systems

The installation of radiant hydronic systems is typically regulated by local building codes. The codes specify proper installation methods for metal framing, wood framing, and concrete.

Underfloor Radiant Hydronic Systems

Underfloor radiant hydronic systems can be classified as wet or dry. ***Dry underfloor radiant hydronic systems*** consist of tubing attached to a wood floor or subfloor. ***Wet underfloor radiant hydronic systems*** consist

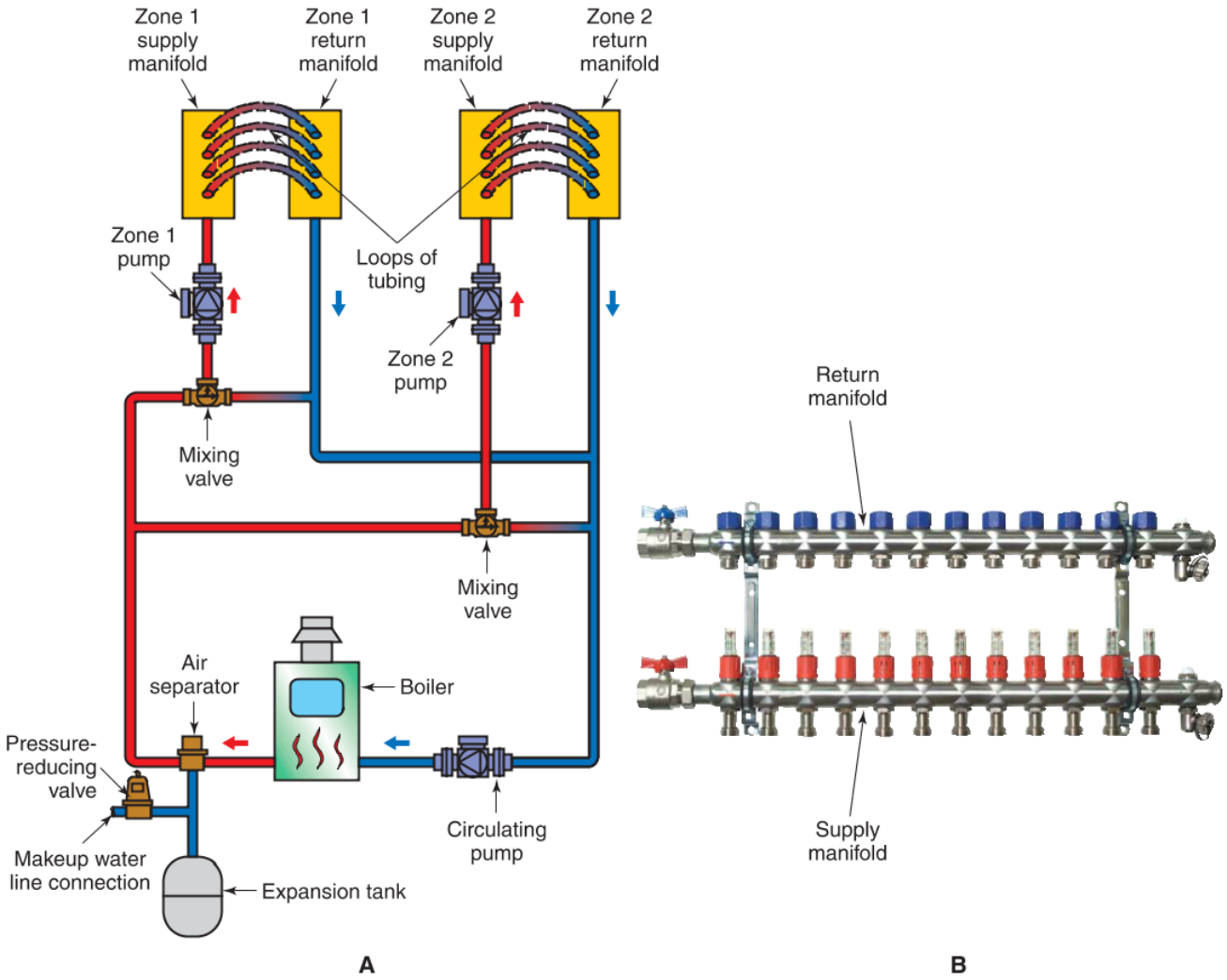

Goodheart-Willcox Publisher; Danfoss

Figure 39-32. Radiant hydronic systems have a supply manifold that divides water flow evenly among the loops of tubing. A return manifold recombines the return flows from the loops into a single return flow. A—A radiant hydronic system with two zones. The loops in the drawing have been shortened for illustrative effect. B—A supply manifold and return manifold.

Copyright Goodheart-Willcox Co., Inc.

of tubing embedded in concrete. Because a wet underfloor radiant heating system is embedded in a concrete slab, it must be installed before the slab is poured.

Techniques used to install these two types of underfloor radiant hydronic systems include the following:

- Tubing is installed over wood subfloor and covered with floor underlayment and flooring, which is a dry method of installation known as the *sleeper method*, **Figure 39-33**.
- Tubing is attached or suspended to the underside of the subfloor and, in some cases, placed in heat transfer plates, which is another dry method of installation, **Figure 39-34**.
- Special grooved panels are installed on top of the subfloor, and the tubing is fitted into the grooves in the panels. The flooring can be installed directly over the top of the panels. See **Figure 39-35**.
- Tubing is tied to a reinforcing wire mesh before a concrete slab is poured, which is a method of wet installation, **Figure 39-36**.
- Tubing is attached to a guide panel on top of the subfloor or slab and then covered with a relatively thin layer of concrete, which is another method of wet installation, **Figure 39-37**.

Thinking Green

Heating Large Spaces

If heating must be provided outdoors or in a large, open space, radiant heat is the most efficient and effective heating method. Since radiant heating warms occupants and objects directly, less energy is required than would be required to heat a similar space with convection heating.

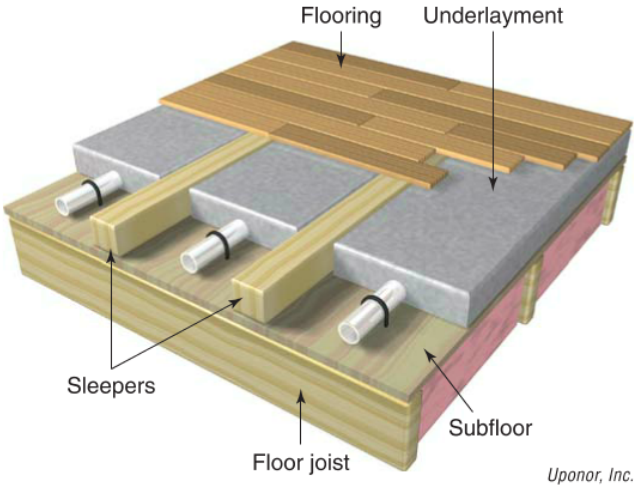

Figure 39-33. Sleepers are installed on a wood subfloor, and then radiant tubing is run between the sleepers and covered with underlayment. The flooring is installed over the sleepers and underlayment.

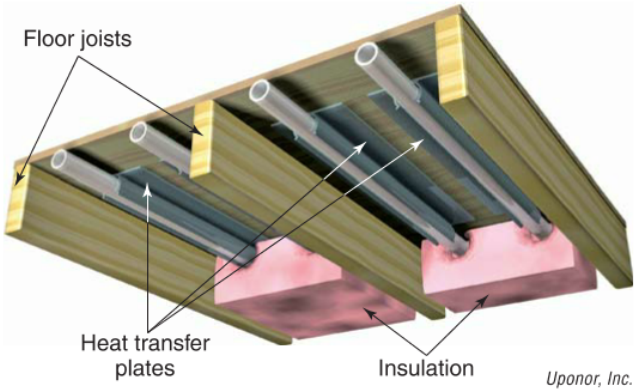

Figure 39-34. Radiant tubing is snapped into heat transfer plates attached to the underside of the subfloor, between the floor joists. The heat transfer plates hold the tubing in place and diffuse the heat over a greater surface area.

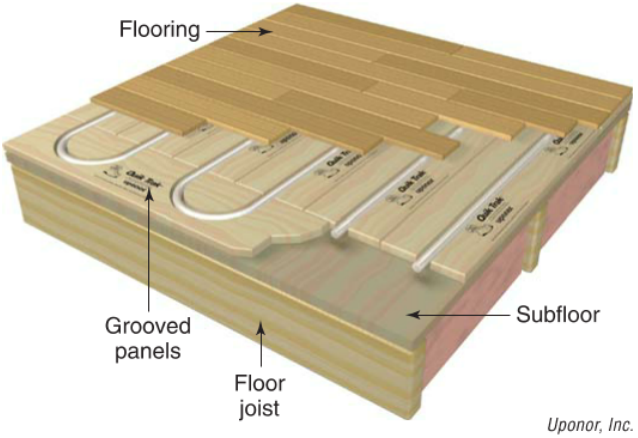

Figure 39-35. Special grooved panels are affixed to the subfloor. The radiant tubing is fitted into the grooved panels, and the flooring is installed on top of the panels.

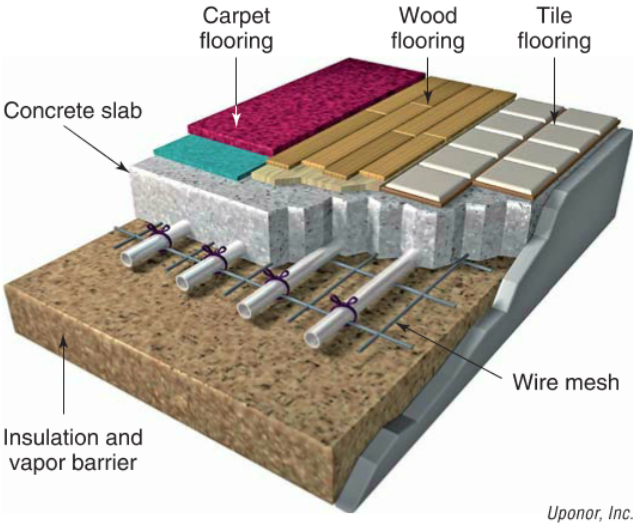

Figure 39-36. Radiant tubing is tied to reinforcing wire mesh before a concrete slab is poured, encasing the tubing.

11

Copyright Goodheart-Willcox Co., Inc.

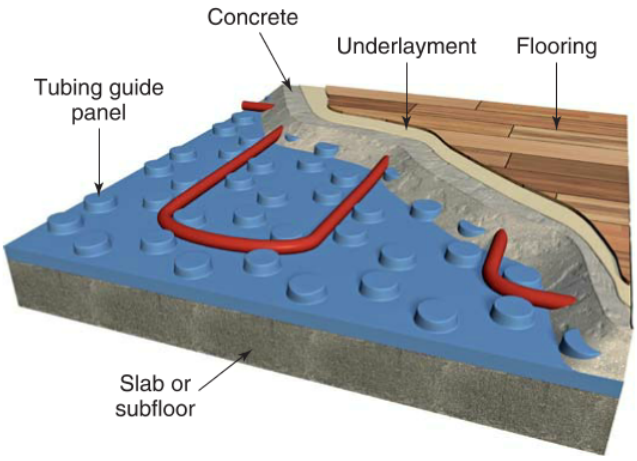

alphaspirit/Shutterstock.com

Figure 39-37. A guide panel is placed on top of a concrete slab or subfloor. The radiant tubing is fitted between knobs on a guide panel and then covered with a thin layer of concrete.

39.2.6 Combined Heating and Cooling Systems

Many hydronic systems in commercial buildings have both boilers and chillers. Depending on the system design and the heating and cooling demands, these systems can provide either hot water or cool water to the terminal units. The heating and cooling systems may be integrated, or they may be essentially separate systems.

A two-pipe system uses the same supply pipe to provide hot water from the boiler and cool water from the chiller to the terminal units. Because of the shared piping, the heating and cooling systems cannot function simultaneously. Shutoff valves are used to isolate the chiller before the boiler is put into operation or to isolate the boiler before the chiller is put into operation. See **Figure 39-38**.

Terminal units used in a two-pipe system with a boiler and a chiller must be designed for both heating and cooling applications. These units are typically fan convectors with provisions for trapping and draining condensate.

A three-pipe system has separate supply pipes for carrying hot and cold water to the terminal units. The third pipe is a return pipe for either. Three-pipe hydronic systems are no longer widely used.

A four-pipe system has separate supply pipes for hot and cold water and also separate return pipes for hot and cold water. This arrangement allows the heating and cooling systems to operate simultaneously, which is useful in fall and spring when certain spaces may need to be warmed and others may need to be cooled, **Figure 39-39**.

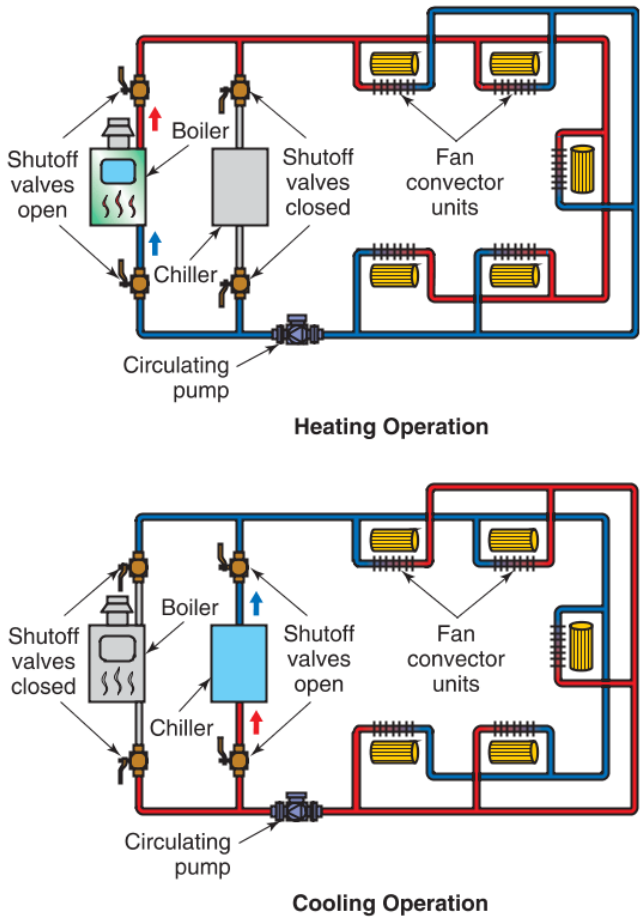

Goodheart-Willcox Publisher

Figure 39-38. A two-pipe heating and cooling system must be changed over between heating and cooling operations. Isolating either the boiler or chiller may be done manually or automatically.

In some four-pipe systems, a single terminal unit is used rather than two separate units. The terminal units in these systems contain both heating and cooling coils. In other four-pipe systems, separate terminal units are used for heating and cooling. See **Figure 39-40**.

39.2.7 Steam Heating Systems

A ***steam heating system*** is a type of hydronic system in which water is heated into steam and piped to radiators in conditioned spaces. The steam releases heat as it condenses back into a liquid inside the radiator and returns to the boiler for reheating.

A boiler heats the steam to 212°F (100°C) or higher, except in vacuum systems, which are rare. As steam releases its heat to the conditioned space, the steam condenses. The condensed water, being heavier, returns

Copyright Goodheart-Willcox Co., Inc.

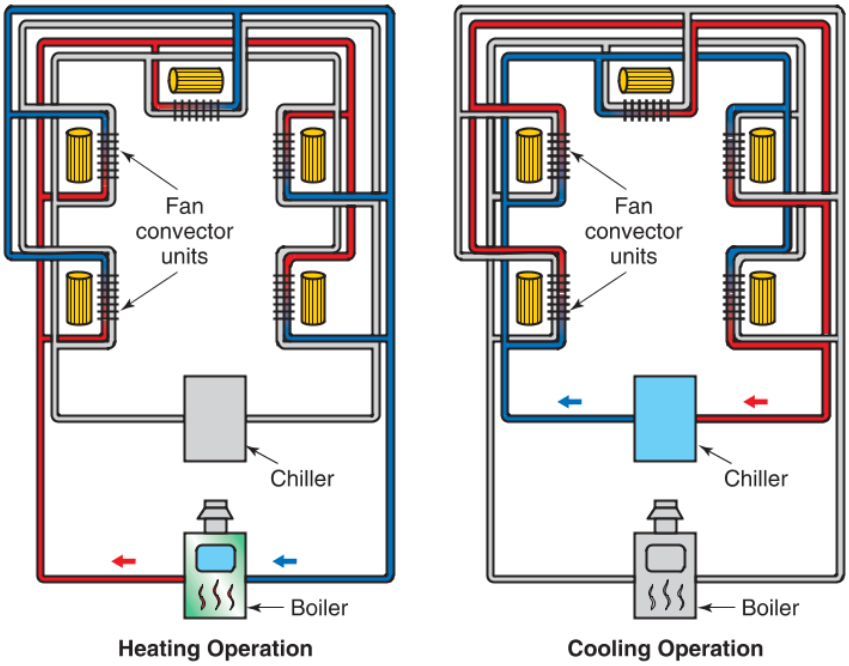

Goodheart-Willcox Publisher

Figure 39-39. In a four-pipe heating and cooling system, no changeover is needed because the hot water and cold water are supplied and returned in separate pipes. This design allows the heating and cooling portions of the system to run simultaneously.

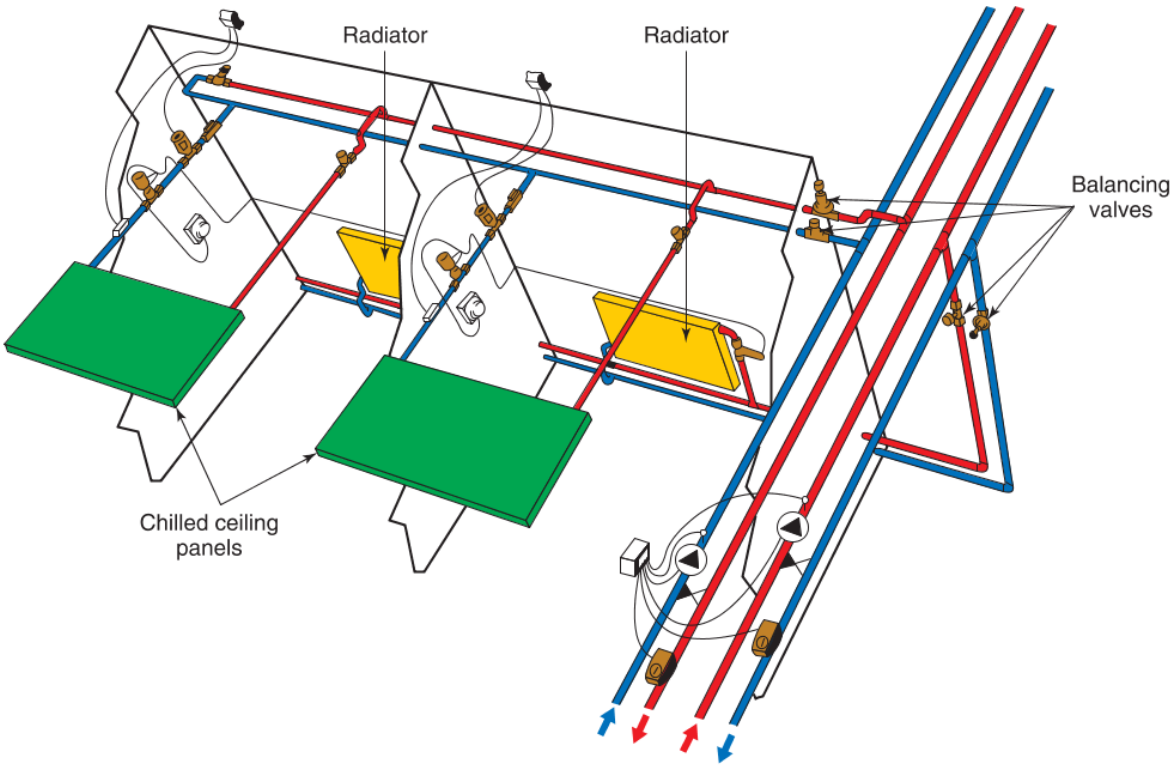

Danfoss

Figure 39-40. A four-pipe system with chilled ceiling panels that provide cooling and wall panel radiators that provide heat.

Copyright Goodheart-Willcox Co., Inc.

to the boiler. The steam releases around 1000 Btu for each pound that condenses. Two basic steam heating systems in use are the one-pipe system and the two-pipe system.

The one-pipe steam system uses a single pipe to carry steam to the radiators and return the condensed water to the boiler. In a one-pipe steam system, air vents are placed at the high points in the system and other places where air pockets are likely to form. The air vents allow air to escape the system so steam can travel to the upper parts of the piping. When steam reaches the vents, they heat up and close, preventing the steam from escaping. As the steam in the radiator gives off its heat, it condenses back to liquid water. The water flows back through the piping to the boiler due to gravity. See **Figure 39-41**.

A two-pipe steam system uses one pipe to carry steam to the radiator and another pipe to return the condensed water to the boiler. A two-pipe steam system has steam traps in the return pipe that block the flow of steam but allow condensed water to pass. See **Figure 39-42**. For some systems in which the boiler is located above some of the piping, a pump must be used to return the water to the boiler.

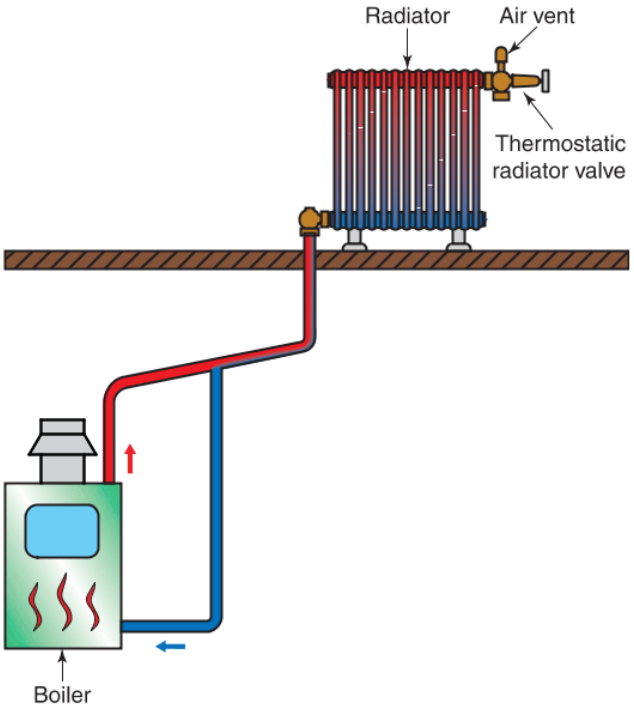

Goodheart-Willcox Publisher

Figure 39-41. In a one-pipe steam heating system, the condensed water drains back to the boiler through the same pipe that supplies the steam. Note that the piping slopes toward the boiler.

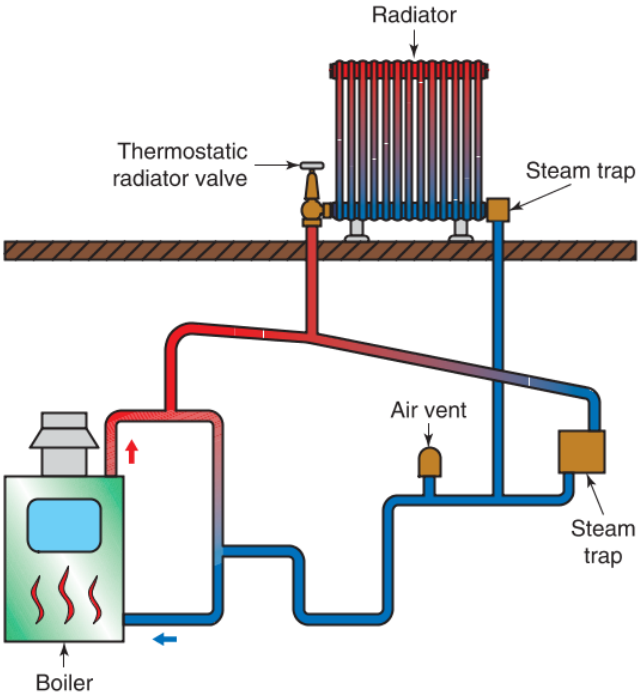

Goodheart-Willcox Publisher

Figure 39-42. In a two-pipe steam heating system, steam is supplied in one pipe, and the condensed water returns to the boiler through a different pipe. The steam supply pipe slopes toward the return pipe, and steam traps prevent steam from passing, but allow water to drain back.

For domestic applications, steam heating systems operate at low pressures or at a partial vacuum. The units are tested at 50 psig (345 kPa) for safety purposes. Commercial and industrial systems operate at progressively higher pressures that approach 1000 psig (7000 kPa). Steam boilers are typically equipped with pressure-relief valves, a water level sight glass, a pressure gauge, and a temperature gauge, **Figure 39-43**.

39.2.8 Oil-Fired Boilers

An oil-fired boiler has a combustion chamber that is lined with material that is unaffected by high temperatures, called refractory material. Fuel oil is stored in a tank, which may be located outdoors, underground, or in the basement of a building. Fuel oil is burned in a gun-type burner, **Figure 39-44**.

When the boiler receives the signal to fire, fuel oil is pumped into the burner nozzle under a pressure of about 100 psig (700 kPa). This atomizes the fuel and causes it to spray out of the nozzle. At the same time, power is supplied to a high-voltage transformer connected to two electrodes in the burner nozzle. Sparks

Copyright Goodheart-Willcox Co., Inc.

Figure 39-43. A typical steam boiler is equipped with a variety of safety, limit, and operational controls.

jump across the spark gap just at the edge of the burner nozzle outlet. The sparks ignite the atomized fuel spray, creating a flame in the combustion chamber, **Figure 39-45**.

Heat from the combustion chamber is conducted through the boiler wall into the water. The combustion gases from the burning fuel flow through the stack into the flue. A stack thermostat senses the temperature of the gases leaving the furnace. If the atomized fuel is not ignited after a few seconds of fuel pump operation, the pump will stop, and a manual reset will have to be operated before it will cycle again. An automatic draft regulator helps maintain a constant pressure in the combustion chamber.

A room thermostat controls the circulating pump. The pump circulates the warm water through the terminal units and returns it to the boiler. The boiler's water temperature is controlled by a device on top of the boiler called a tridicator, which can sense both temperature and pressure. A tridicator indicates both pressure and temperature of the water or steam in a boiler. When the water temperature in a boiler drops below

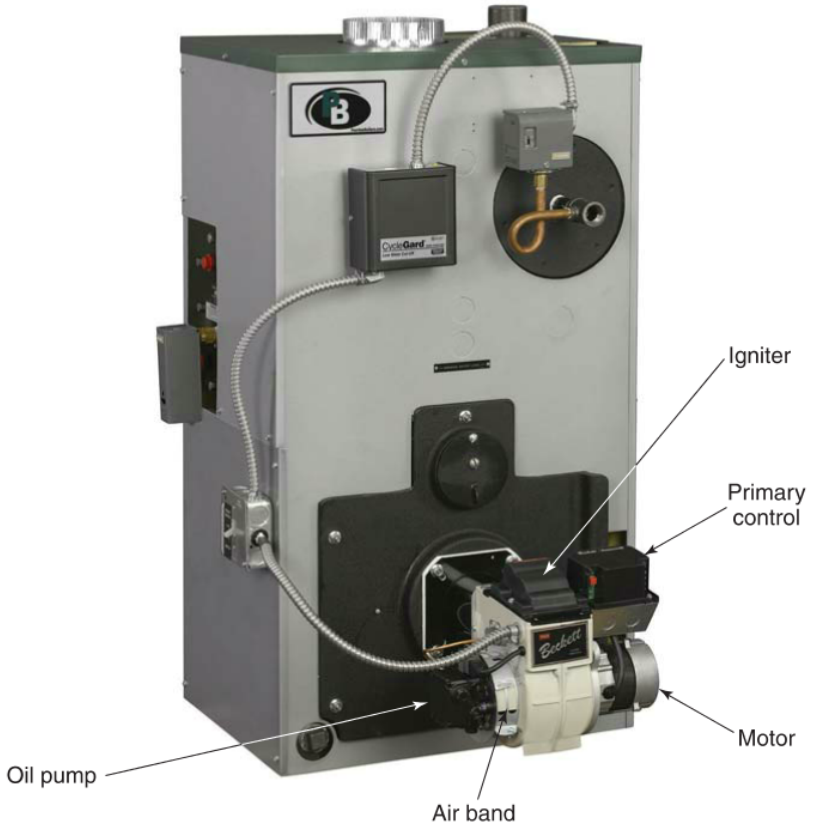

Figure 39-44. This oil-fired boiler has a gun-type oil burner. Visible parts are identified.

Copyright Goodheart-Willcox Co., Inc.

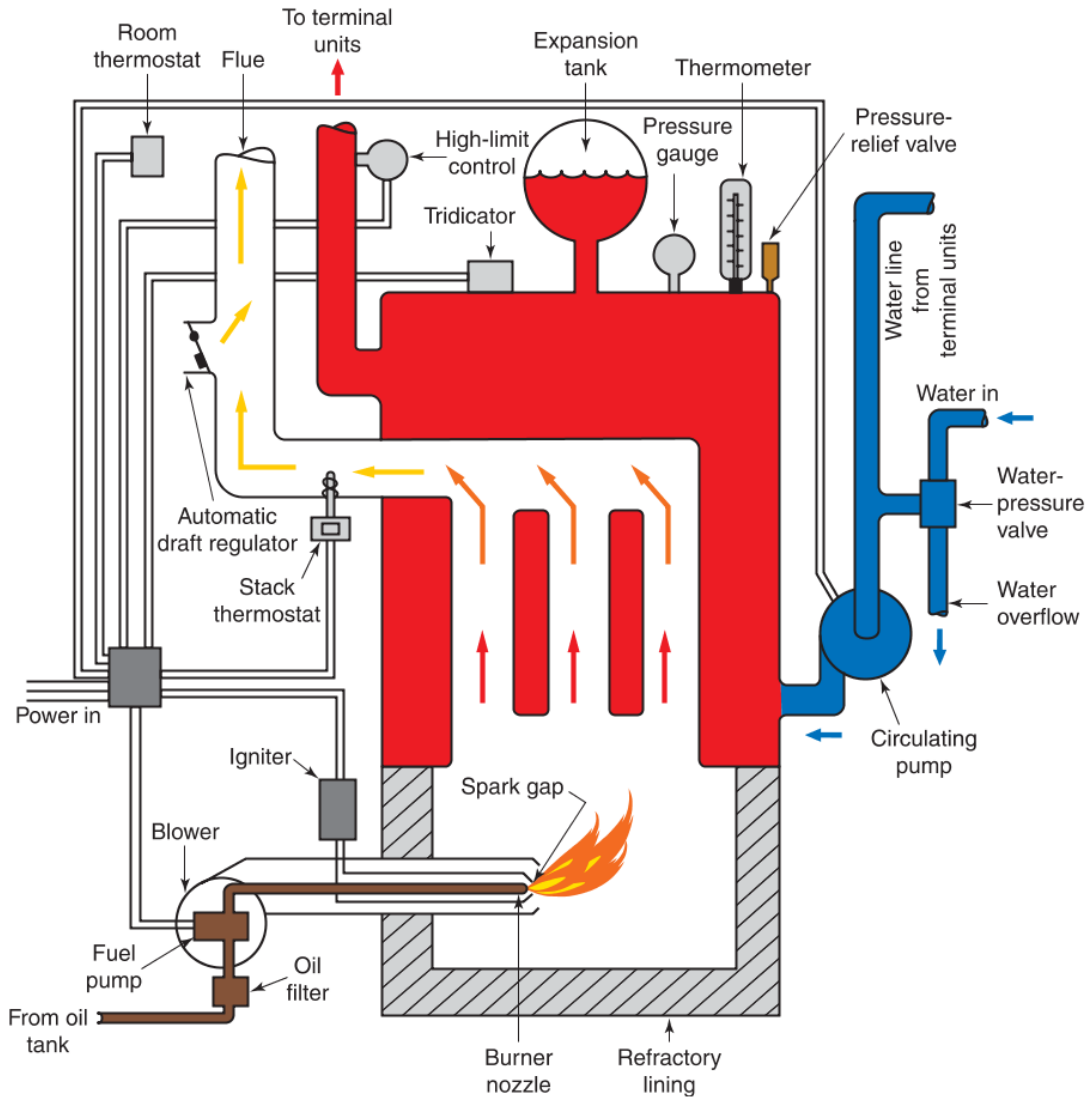

Goodheart-Willcox Publisher

Figure 39-45. Diagram of an oil-fired boiler in operation.

the required level, the tridicator signals the burner to turn on. It also shuts the burner off when the water temperature reaches the desired level.

All boilers have a ***high-limit control***. This control is often attached to the boiler's combustion chamber. However, it may also be installed in the boiler's warm-water outlet. The high-limit control automatically shuts off the fuel if the water temperature or pressure gets too high. A pressure-relief valve is also mounted on the boiler, which opens automatically if the pressure inside the boiler exceeds the safe limit. An expansion tank is used to hold expanding (warm) and contracting (cool) water.

39.2.9 Gas-Fired Boilers

A gas-fired boiler burns fuel gas as a means of producing heat for boiling water. Older models used a low, constant pressure gas and an atmospheric burner. Newer, high-efficiency models are condensing boilers that extract as much heat out of combustion gas as possible. Gas-fired boilers can be identified by their connection to a gas line and the presence of gas burning components. A gas valve and manifold are good indicators of a gas-fired boiler, **Figure 39-46**.

A pressure regulator ensures that the gas supplied to the burner flows at a constant, preset pressure. When

Copyright Goodheart-Willcox Co., Inc.

gas is supplied to the burner, a pilot light or electronic ignition system ignites the burner. The heat generated in the combustion chamber is conducted through the boiler wall and into the water, and the combustion gases flow through the stack into the flue. An air break or draft diverter installed in the stack helps maintain a constant pressure in the combustion chamber, **Figure 39-47**.

Water temperature in the boiler is controlled by a tridicator located at the top of the boiler. The tridicator turns the burner on when the water temperature drops below the required level and also turns the burner off when the temperature rises to the proper level. A high-limit control is attached to the warm-water outlet of the boiler. The high-limit control automatically shuts off the gas if the water temperature or pressure gets too high. The system also has a pressure-relief valve. This valve prevents the buildup of dangerously high pressure in the boiler. An expansion tank is used to hold expanding (warm) and contracting (cool) water.

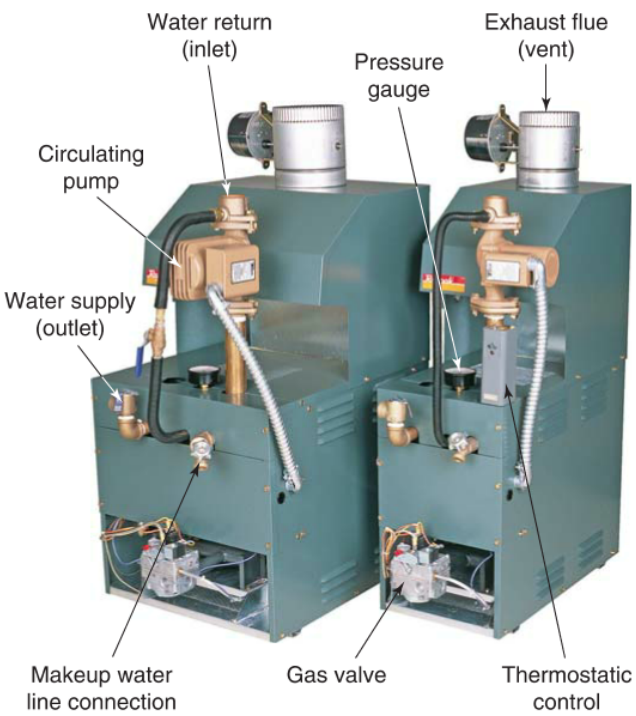

Raypak, Inc.

Figure 39-46. Two conventional gas-fired boilers that can operate with return water temperatures as low as 105°F before combustion gases start condensing.

39.3 Hydronic System Controls

Water level, temperature, and flow are three variables that are regulated by a hydronic system's controls. Floats or sensors monitor the volume of water in a hydronic system and feed more water to the system when the water level is too low. Thermostatic controls are used to maintain the proper water temperature in the system and to adjust water temperature or flow to keep the conditioned space at the desired temperature. Flow switches monitor flow through the system. Control valves shut down or bypass parts of the system to stop water flow.

39.3.1 Low-Water Cutoff

A ***low-water cutoff (LWCO)*** is a control that ensures that a hydronic system operates only when it contains the proper amount of water. A low-water cutoff may operate a makeup water valve to add more water to the system if the water level gets low. Low-water cutoffs also shut down the system if the water level drops too low.

A low-water cutoff is generally a switch that is turned on and off by a float device or is triggered by sensor probes. A float-type LWCO operates in two stages. As the water level drops, the float also drops. When the water level drops below a specific level, the float switch turns on the makeup water pump or opens the makeup water valve to add more water to the system. When the float rises back up to the correct level, the switch turns off, and no more water is added. However, if the float drops to an even lower point, the float switch cuts off the fuel supply to the boiler and deactivates the pumps, **Figure 39-48**.

Some low-water cutoffs use probes instead of a float. This type of LWCO has two electrodes that are immersed in the water. A small current flowing in the water between the two electrodes energizes a holding relay, allowing the boiler to run. If the water level falls below the upper electrode, the current flow between the electrodes stops, which causes the relay to open and the system to shut down. Some probe-type LWCOs have a third electrode so that the control can be used to add makeup water to the system or to shut down the system, depending on the water level.

Caution

Low-Water Cutoffs

Excessive air or contaminants in boiler water can result in foaming, which can cause a low-water cutoff to malfunction. For this reason, a technician should ensure that a hydronic system is cleaned properly before putting it into service and that as much air is removed from the water as possible.

Copyright Goodheart-Willcox Co., Inc.

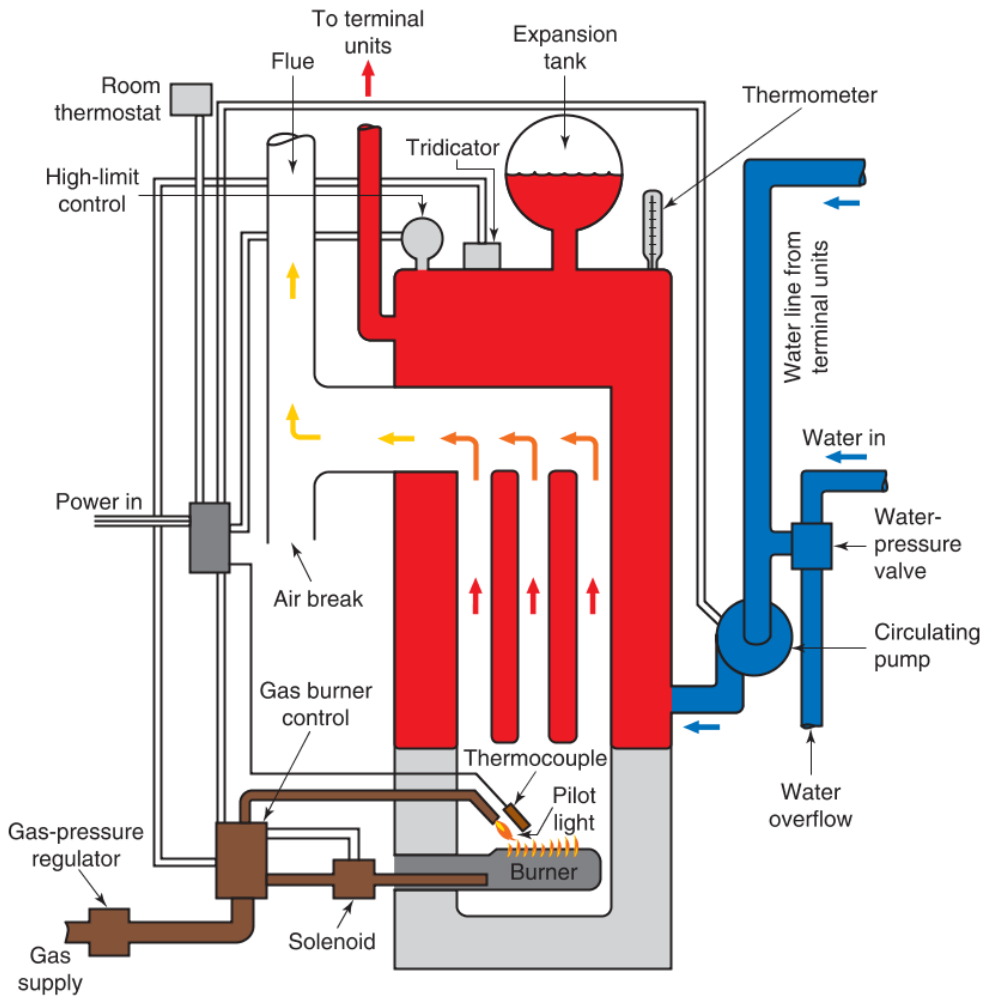

Goodheart-Willcox Publisher

Figure 39-47. A gas-fired boiler uses an atmospheric gas burner as the source of heat.

39.3.2 Flow Switch

In order for a hydronic system to function efficiently, proper water flow must be maintained. ***Flow switches*** are used to shut down a hydronic system or bypass parts of it when there is inadequate flow. A hot-water system equipped with a flow switch is shown in **Figure 39-49**. If the water flow ceases, the flow switch opens the electrical circuit and shuts off the burner. Some boilers have a recirculation circuit that helps to maintain a more constant water temperature in the boiler. If water flow stops in this circuit, the flow switch will also shut down the system.

39.3.3 Aquastat

An ***aquastat*** measures the temperature of the boiler water and turns the burner or heating element on and off as needed to maintain the preset temperature. Many aquastats have a built-in safety function that shuts off the burner or heating element if the water temperature in the boiler exceeds the safe operating limit. The aquastat may need to be reset manually before the boiler can be operated again.

An aquastat also sets a boiler's low operating temperature and differential. These settings determine a boiler's operating temperature range. The aquastat turns on the burner or heating element if the boiler's water temperature drops below the operating temperature range and turns it off again when the temperature exceeds the operating temperature range, **Figure 39-50**.

39.3.4 Zone Controls

While an aquastat maintains the proper water temperature in a boiler, a variety of thermostatic controls

Copyright Goodheart-Willcox Co., Inc.

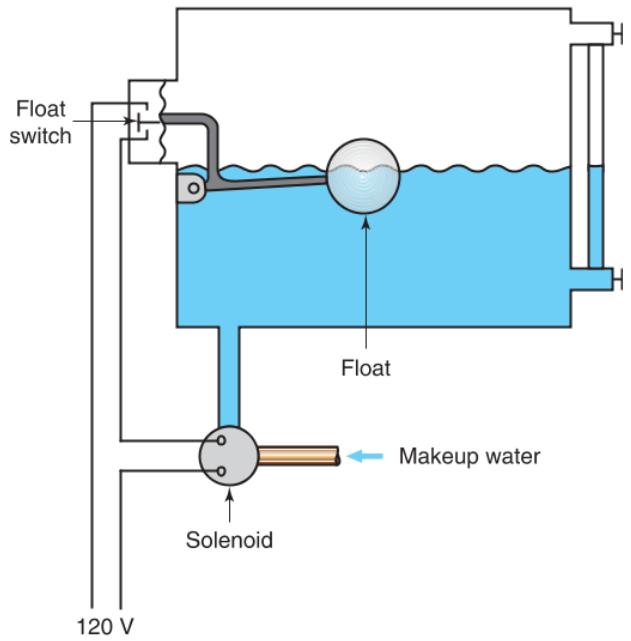

Float Type

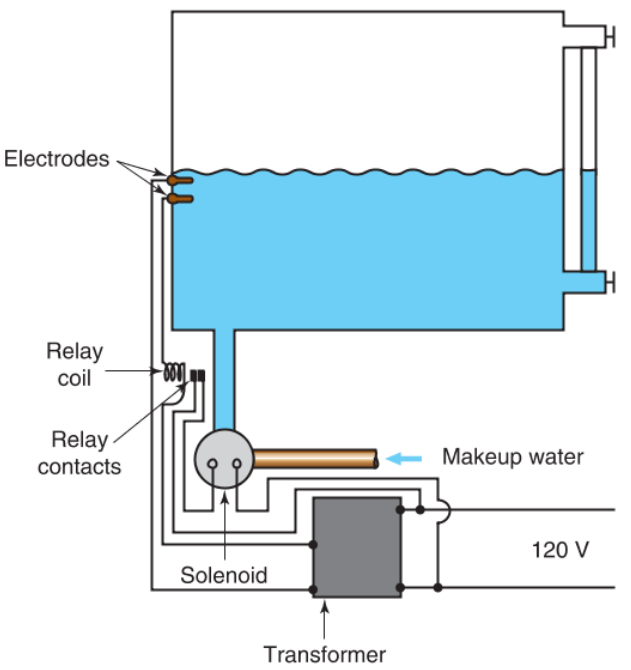

Probe Type

Goodheart-Willcox Publisher

Figure 39-48. Two types of low-water cutoffs. A float-type LWCO operates a solenoid that opens the makeup water valve when the water level drops. With a probe-type LWCO, the solenoid opens the makeup water valve when current stops traveling across the electrode probes.

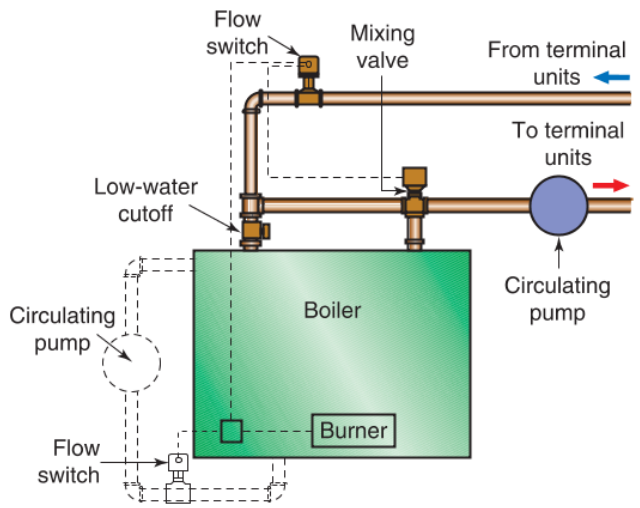

ITT McDonnell & Miller

Figure 39-49. A flow switch located in the return line is wired to the mixing valve and the burner to shut down the system if flow stops. The dashed lines indicate where a flow switch would be located in a boiler with a recirculation circuit.

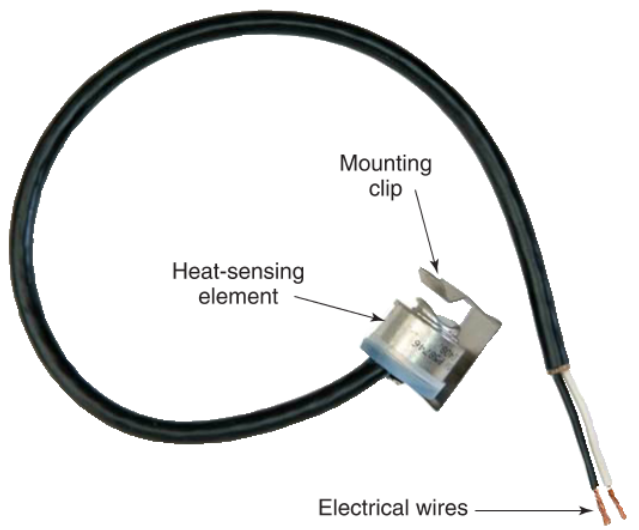

Xylem Inc.

Figure 39-50. An aquastat's heat sensing element opens and closes an electrical contact used to control boiler system operation.

can be used to maintain the desired temperature in a certain area of a conditioned space. One type of thermostatic control, called a room thermostat, adjusts room temperature by regulating the flow of heated water through a single zone of a system's tubing. In a series loop system, the room thermostat turns the circulating pump on and off as needed to maintain the desired temperature in a single-zone conditioned space.

Copyright Goodheart-Willcox Co., Inc.

In one-pipe and two-pipe systems, reduced flow through one terminal unit does not result in reduced flow through the other terminal units, as would be the case in a series loop. This means that while a main room thermostat can be used to set an overall heat level for the building, individual thermostatic radiator valves should be installed to control flow through each individual terminal unit for zone control. This allows greater control of heat in specific areas, **Figure 39-51**.

For zoned systems, separate room thermostats can be installed in each zone. Each thermostat provides an input to a temperature controller, which in turn controls the operation of the circulating pumps and zone valves to regulate water flow through the individual zones. The system can also be set up so that the circulating pump operates continuously and the zone valves open and close as needed.

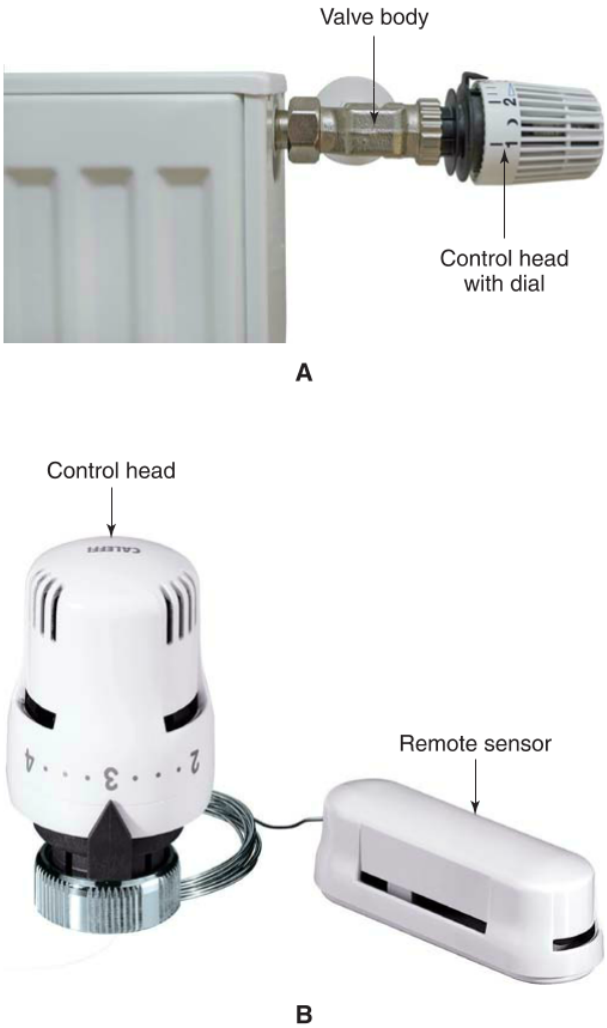

Christina Henningstad/Shutterstock.com; © 2012 Caleffi North America, Inc.

Figure 39-51. Thermostatic radiator valves. A—Thermostatic radiator valve installed on a radiator. B—Thermostatic radiator valve with a remote sensor for wall mounting.

39.3.5 Outdoor Reset Control

The temperature of the boiler water is normally set by an aquastat and remains constant unless the boiler temperature set point is changed. The temperature of the water in the boiler is typically set to provide efficient heating on the coldest days of the season. However, on relatively warm days, far less heat is lost from the conditioned spaces. As a result, the system cycles on and off relatively quickly. Fuel is wasted maintaining a higher boiler temperature than is needed for efficient heating, and wear and tear on the system increases because of short cycling.

An ***outdoor reset control*** is an auxiliary control that modifies the operating temperature range of a hydronic system based on the difference between outdoor and indoor temperatures. As the difference between indoor and outdoor temperatures decreases, the outdoor reset control lowers the operating temperature of the system. This provides more gradual heating on relatively warm days and prevents short cycling of the system.

Pro Tip

Outdoor Reset Controls

The maximum temperature setting on an outdoor reset control must be set lower than the temperature setting on the boiler's high-limit control. This prevents the high-limit control from interfering with the normal operation of the outdoor reset control.

39.3.6 Indoor Reset Control

An ***indoor reset control*** adjusts boiler temperature to match the heating load. It does this by monitoring the cycle time required to satisfy a call for heat. If the system runs an excessively long time to satisfy a call for heat, the indoor reset control increases the boiler water temperature. If the system is short cycling, the indoor reset control lowers the boiler water temperature.

Caution

Indoor and Outdoor Reset Controls

Never wire an indoor or outdoor reset control in such a way that it bypasses the boiler's high-limit control.

Copyright Goodheart-Willcox Co., Inc.

39.3.7 Hydronic System Operating Sequences

Hydronic system operation can be controlled in four basic ways:

- Burner and circulating pump turn on at the same time.
- Burner remains on continuously, and the pump cycles on to move the water when heat is called for.
- Circulating pump operates continuously, and the zone valves open and close to allow water access to zones based on calls for heat.
- Zone valves and circulating pump are cycled on at the same time.

39.4 Hydronic System Installation

All local code requirements must be checked and followed when installing a hydronic system. The boiler for a hydronic system must be mounted level. The top of all sections of tubing must be aligned to prevent air from being trapped at the junctions between tubing of different sizes. Eccentric reducer fittings should be used to join tubing of different sizes. In hot-water hydronic systems, eccentric reducer fittings reduce the danger of air pockets forming where differently sized tubes are joined. An ***eccentric reducer fitting*** is a reducer fitting in which the centerlines of the tubes are offset, **Figure 39-52**.

When installing hydronic systems, be sure to allow for tubing or pipe expansion. A 100′ length of steel pipe lengthens by 3/4″ with every 100°F increase in temperature. A 100′ length of copper tubing lengthens by 1 1/16″ with every 100°F increase in temperature. Where riser (vertical) pipes connect to a horizontal run, install a flexible joint. Also, install an expansion joint at the boiler.

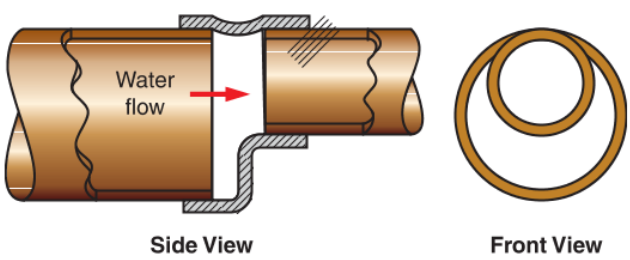

Goodheart-Willcox Publisher

Figure 39-52. By keeping the top of two differently sized tubes aligned, an eccentric reducer fitting eliminates any pockets where air might get trapped.

Code Alert

Hydronic System Tubing and Piping

The acceptable materials, joining methods, and designs for hydronic tubing and piping are specified by local building codes. Codes address such topics as the types of tubing and pipe that can be installed, valve requirements, drainage, pipe support, and installation of embedded piping.

In closed-loop hydronic systems, the hot water coming from the boiler is above atmospheric pressure, which means smaller pipes can be used. The heat load can be based on a 20°F (11°C) temperature differential between the supply water and return water. Typically, water returning to a boiler should be 20°F (11°C) lower in temperature than water leaving the boiler. After installation, hydronic systems must be flushed to remove all dirt. The system must also be tested for leaks as specified by code before it may be operated.

Code Alert

Hydronic System Testing

The International Mechanical Code (IMC) specifies that hydronic piping (excluding that which is used by ground-source heat pumps) must be tested hydrostatically at one-and-one-half times the maximum system design pressure. This test pressure must not be less than 100 psi (689 kPa). This test pressure must be maintained for at least 15 minutes.

Safety Note

Pressure-Relief Valve

A boiler's pressure-relief valve should have a drainpipe attached to it to prevent the boiler from releasing an uncontrolled spray of hot water in the event that the valve opens. Cut the outlet end of the drainpipe at an angle to prevent someone from plugging it or capping it.

39.4.1 Preparing a System for Initial Start-Up

After a hydronic system is installed, it should be checked before it is put into service. The procedure used to check a new boiler is commonly referred to as *boiling out*. The water to be used in the system should be analyzed for hardness, contaminants, and proper pH level. If the water is excessively hard, contains contaminants, or has an improper pH level, it must be properly conditioned for use. Filtering and conditioning the water can reduce particulates and minerals,

Copyright Goodheart-Willcox Co., Inc.

and solutions can be added to the water to adjust the pH level and reduce corrosion.

Fluxes, pipe joint compounds, and cutting oils left over from the installation process can sometimes form gases in a system. Dirt, sand, steel thread chips, solder bits, or sawing and filing chips can erode the system. These contaminants can also clog screens and ruin valves and pump seals.

To prepare a system for its initial start-up, begin by filling the system with water. Add about one pound of trisodium phosphate for every 50 gallons of water. Circulate the solution for about four hours and then drain it out. Clean the screens and refill the system with water. It is then ready to operate. A card should be attached to the boiler so a history of all maintenance and service performed on the system can be recorded. A list of future treatment procedures should be included on the card.

Unless the pump seals leak, avoid treating the water with chemicals. The chemicals may damage seals and valves. Do not use over 300 ppm of chromates or over 500 ppm of nitrites. Organic growth can be controlled using sodium pentachlorophenate; however, it is best to consult a water treatment expert before attempting boiler water treatment.

39.4.2 Balancing a Hydronic System

During the initial start-up of a system, pressure gauges or flow meters are used to determine the rate of water flow, in gallons per minute (gpm), through each balancing valve. Some balancing valves have access ports on either side that allow a technician to check the valve's pressure drop with a pressure gauge. Other balancing valves might have a built-in flowmeter, **Figure 39-53**.

A manufacturer of a balancing valve typically provides a chart that equates the valve's pressure drop to water flow in gallons per minute. A technician should then compare the valve's measured rate of water flow to system specifications and adjust the balancing valve as needed to achieve the correct flow rate. Balancing valves with a memory stop feature make it easy to reestablish the system balance after a seasonal shutdown.

39.4.3 Steam Heating System Installation

Steam heating systems vary with each installation. When radiators are used as the terminal units, the system does not add humidity to the air in the room or filter air in any way. Air circulation results entirely from natural convection, which means separate systems

© 2012 Caleffi North America, Inc.

Figure 39-53. Balancing valves with built-in flowmeters.

for controlling the humidity and filtering air must be used.

All steam heating systems must be installed according to applicable codes. As with hot-water boilers, a steam boiler must be mounted level. Radiators must be pitched to ensure that the condensed water drains from the radiator, and the return piping must slope down to the boiler. The piping must be designed to provide for expansion, and air vents must be located at the high points of the system. Each radiator should have an air vent and a steam trap.

Steam traps operate thermostatically based on the temperature difference of fluids passing through them. They open for cool fluid (condensed water) and close for hot fluid (steam). Thus, a steam trap keeps the steam in the radiator but allows condensed water to return to the boiler. There are three types of thermostatic steam traps:

- ***Expansion steam traps*** have an internal material that expands and contracts with temperature change, triggering the steam trap's valve.
- ***Balanced pressure steam traps*** are filled with a mixture of water and mineral spirits. This mixture vaporizes and condenses just below the temperature of steam to trigger the valve.
- ***Bimetal steam traps*** contain two dissimilar metal strips that are bonded together. Temperature changes cause movement in one direction or the other to trigger the valve.

To help maintain a constant temperature within a room and increase the comfort and efficiency of the system, a thermostatic radiator valve should be installed at each radiator. In a two-pipe system, a thermostatic radiator valve should be installed on the supply

Copyright Goodheart-Willcox Co., Inc.

side of the radiator, allowing the valve to regulate the amount of steam that enters the radiator. Refer back to **Figure 39-42**.

For a one-pipe system, the air vent should be installed on the thermostatic radiator valve. By regulating the amount of air leaving the radiator, the valve allows only a certain amount of steam to enter, providing the appropriate amount of heat to the room. Refer back to **Figure 39-41**.

39.5 Troubleshooting and Servicing Hydronic Systems

When properly designed and maintained, hydronic systems can provide many years of reliable heat. However, hydronic systems are more maintenance intensive and more sensitive to neglect than forced-air heating systems. Over time, contaminants and air can get into the system and cause corrosion and problems with valves and other components. Hydronic systems also have many electrical and electronic components, such as circulating pumps and zone valves, that can fail and cause the system to malfunction.

The first step in troubleshooting a hydronic system is to get the facts. Ascertain the history of a system by asking the owner if this is a new problem, a recurring problem, or an old problem and by asking if the system has been serviced recently. Most hydronic system problems fall into one of three areas: electrical, venting, or water circulation. The following sections describe some of the maintenance, troubleshooting, and repair procedures needed to keep a hydronic system operating properly.

39.5.1 Boiler Problems

Electrical problems in a boiler may be the most troublesome because the boiler is part of a larger system and is wired in the field by a technician during installation. Begin by checking for power at the boiler. A multimeter can be used to determine if the service switch has power and if the wiring is correct. The black lead should be the ungrounded (hot) wire, and the white lead should be the grounded (neutral) wire.

If the boiler will not fire, check the vent pipes and dampers. In order to function properly, a gas-fired or oil-fired boiler must also be able to take in fresh combustion air and vent exhaust gases. Any blockage in the intake and exhaust passages can cause incomplete combustion or boiler failure. Venting problems are often caused by vent restriction or deteriorating vent piping. Visually check the rotation of the damper shaft. If the damper appears operational and the vent piping is unobstructed and in good condition, check the limit and operating controls.

Observe the boiler's start-up sequence. How far into the sequence the boiler gets will be a guide in isolating the source of the problem. Use a multimeter to determine if the rollout and blocked-vent switches are operational. A rollout switch is a safety control that shuts down the boiler if the burner flames "roll out" or travel beyond the combustion chamber. This can happen if the exhaust passages are blocked with soot or if the burner is receiving its combustion air from a source other than the combustion blower. A blocked-vent switch is a safety control that shuts down the boiler if a backdraft condition is detected. If these switches are tripped, look for flue blockages and sources of combustion air. Thermostats are another common source of heating problems. Thermostats may malfunction due to vibration, oxidized contacts, broken wires, or improper temperature settings.

Safety Note

Rollout and Blocked-Vent Switches

If a rollout or blocked-vent switch interrupts boiler operation, it is extremely important that the cause of the interruption be found and corrected before the boiler is put back into operation. The conditions that trip a rollout or blocked-vent switch can result in fatal levels of carbon monoxide entering the building. Never bypass a rollout or blocked-vent switch to put a boiler back into service.

39.5.2 Water Circulation Problems

Water circulation problems affect the transfer of heat. To check the circulation of water through a system, supply power to one of the circulating pumps to establish flow through the boiler. Use a contact thermometer to compare supply and return water temperatures. With the boiler firing and at operating temperature, there should be at least a 20°F (11°C) temperature difference between the supply and return water temperatures at the boiler.

Most water circulation problems result from air trapped in the system. Air in a hydronic system can compress and expand, causing problems with pressure controls and pumps. Excessive air or pressure problems can form bubbles that disrupt water flow through the pump. The implosion of bubbles causes damage to circulator pumps and is referred to as ***cavitation***. If enough air gathers at one location in a hydronic system, it can completely block the flow of water. A section or component with this condition is

Copyright Goodheart-Willcox Co., Inc.

said to be ***air-bound***. Air in a hydronic system will also cause noise.

Hydronic systems are equipped with a variety of air-removal components, such as air scoops, air separators, and air vents. When these components are operating properly, they automatically vent air from the system. Manual bleed valves may be installed on some systems. These valves trap air like an air separator or air scoop, but they must be manually opened to allow the air to vent out.

Drain hoses are sometimes attached to the outlets of air vents to drain away any water that leaks from the vent. If the air vents or drainage hoses become clogged, the vents can malfunction. In addition, many air vents are equipped with valve caps that keep dust and debris from entering the valve. These caps should be loose enough for air to escape through the cap. If the cap is tightened completely, it will block the escape of air, causing the air vent to fail.

Pro Tip

Air Vent Failure

Air vents in living spaces frequently get painted during remodeling projects. The paint can clog the air vents and cause them to malfunction.

Common symptoms of excessive air in a hydronic system include the following:

- Pump motor failure and water leaks around the pump packing.
- Noise in wet-rotor centrifugal pumps resulting from a lack of lubrication.
- Cavitation causing noise in pipes.
- Turbulence causing noise in pipes.
- Poor heat transfer at the terminal units.
- Accelerated corrosion.

39.5.3 Bleeding a Hydronic System

If a hydronic system shows signs of having excessive trapped air, purge the system or bleed off the air and look for the source of the air buildup. In a system equipped with air vents, a buildup of air indicates that one or more of the air vents is malfunctioning or that the system is improperly designed. The faulty vents must be located and cleaned or replaced. If all the air vents are working properly but there is still excessive air, additional air vents may need to be added where the air is collecting.

Systems equipped with manual bleed valves can be bled by opening each bleed valve until only water emerges from the valve. If possible, connect a hose to the valve outlet and place the other end in a bucket filled with several inches of water before opening the valve. This not only prevents water spillage from the valve, but also provides a good way of visually determining when all the air has been removed. Once the valve is opened, any air that escapes from the system will form bubbles as it leaves the end of the hose. When no more bubbles emerge from the hose, all of the air has been removed, and the manual bleed valve can be closed. The process is then repeated at each manual bleed valve in the system.

39.5.4 Purging a Hydronic System

If a hydronic system has been recently installed, has been drained for service, or contains a large amount of trapped air, it should be purged. Purging is similar to bleeding, except that it removes air from the entire system rather than a localized area served by a manual bleed valve or air vent. During purging, water from the makeup water line gradually fills the system and, because the water enters the system at a relatively high pressure, pushes any trapped air out through a drain valve or purge valve, **Figure 39-54**.

© 2012 Caleffi North America, Inc.

Figure 39-54. A drain valve designed to be connected to a balancing valve to drain a hydronic system.

Copyright Goodheart-Willcox Co., Inc.

Safety Note

Purging a Hydronic System

Use caution when bleeding or purging a hydronic system since the water may be hot. When purging a system, take precautions to prevent an electrocution hazard by making sure the boiler's electrical components do not come into contact with water.

Pro Tip

Purge Valves

Purge valves combine the function of a shutoff valve and drain valve in a single valve body. Rather than using a single purge valve, some systems have separate shutoff valves and drain valves. The shutoff valve downstream from the drain valve must be closed while these systems are being purged.

Systems that use only water can be purged using the makeup water supply and purge valves. For series loop systems, this is a simple, single-stage operation. For systems with a primary loop and secondary loops, the individual loops should be purged separately. If the system uses a glycol solution, an auxiliary pump is used to purge the system and recycle the glycol solution.

Purging a Series Loop System

If a series loop system uses only water (not glycol or other substances), it can be purged using the following procedure. Refer to **Figure 39-55** as you follow this procedure.

1. Turn off the boiler and allow it to cool down. If the system is purged while it is still hot, the sudden rush of cold makeup water can cause the boiler to crack.
2. Attach a hose to the drain valve. Run the other end of the hose to a drain. Rather than purging directly to a drain, you can also put the end of the hose in a bucket. The advantage of this method is that bubbles can be clearly seen coming out of the end of the hose.
3. Open the bypass at the pressure-reducing valve in the makeup water line. Also, engage the fast-fill handle on the pressure-reducing valve. This allows makeup water to enter the system at full pressure.
4. Make sure the drain hose is securely positioned at the drain so water will not spill. Then, close the shutoff valve downstream from the drain valve and open the drain valve so all of the water is diverted through the hose. As air is forced out of the system, the discharge from the hose will hiss and spit.
5. When a solid stream of water free of bubbles comes out of the hose, shut off the bypass at the pressure-reducing valve and disable the valve's fast-fill handle.
6. Close the boiler drain valve and open the shutoff valve.
7. Check the cold boiler pressure. If the pressure is incorrect, check the setting on the pressure-reducing valve and adjust it as necessary. If the pressure is still high, open the drain valve after adjusting the pressure-reducing valve setting. When the pressure drops to the proper level, the makeup water line should maintain the proper pressure.
8. Turn on the boiler. As the boiler heats up, check the drain valve and piping around the boiler for leaks.
9. When the system has warmed up to operating temperature, check the boiler pressure. Also, make sure the terminal units are heating up properly.

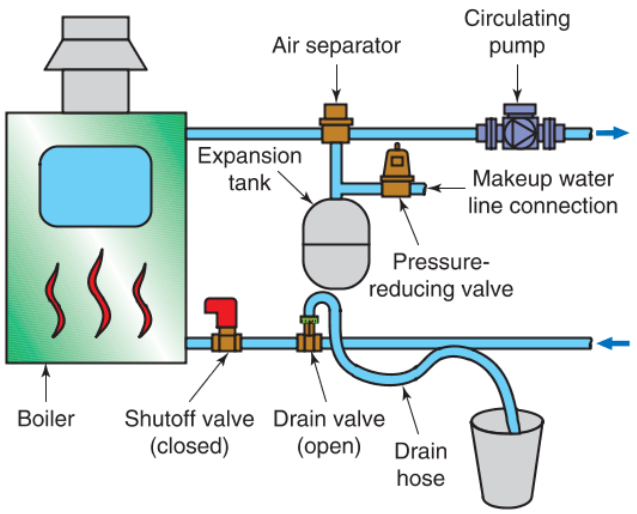

Goodheart-Willcox Publisher

Figure 39-55. Setup for purging a series loop system.

Purging a One-Pipe System with Primary and Secondary Loops

A one-pipe system with primary and secondary loops is purged in a manner similar to a series loop system. However, extra steps are required to ensure that all the loops are properly

11

Copyright Goodheart-Willcox Co., Inc.

purged. Refer to **Figure 39-56** as you follow this procedure.

1. Turn off the boiler and allow it to cool down.
2. Isolate the secondary loops so that only the primary loop will be purged.
3. Purge the primary loop as described in the previous procedure.
4. When the primary loop has been properly purged, close the drain valve on the primary loop and move the hose to the drain valve on the first secondary loop. Open the drain valve on the secondary loop and allow water to run through the loop until the water is free of bubbles.
5. When no more bubbles appear, close the drain valve and move the hose to the drain valve

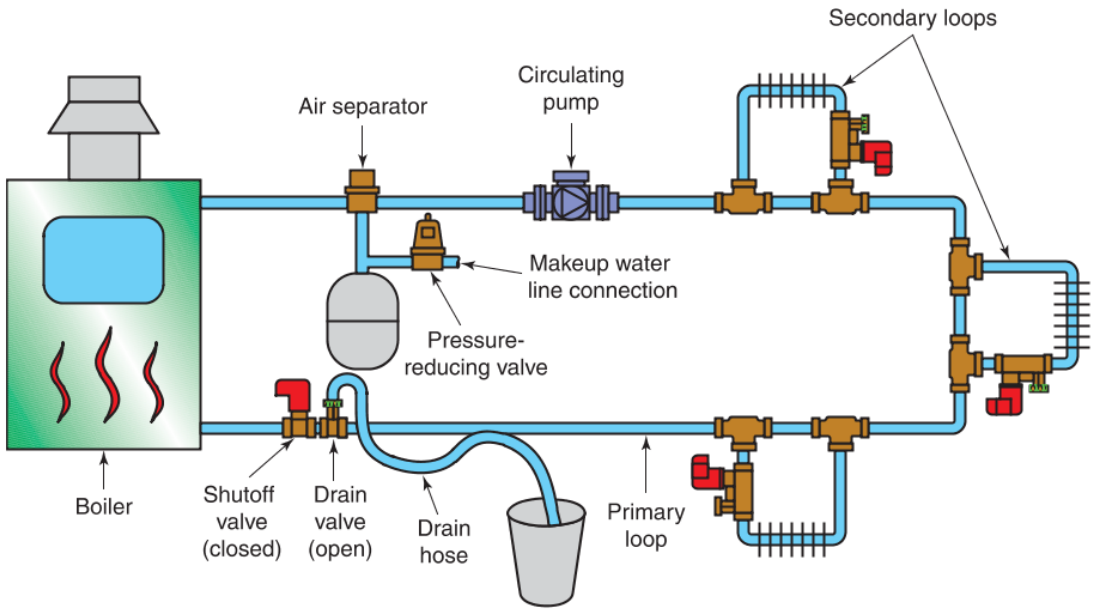

Purging Primary Loop

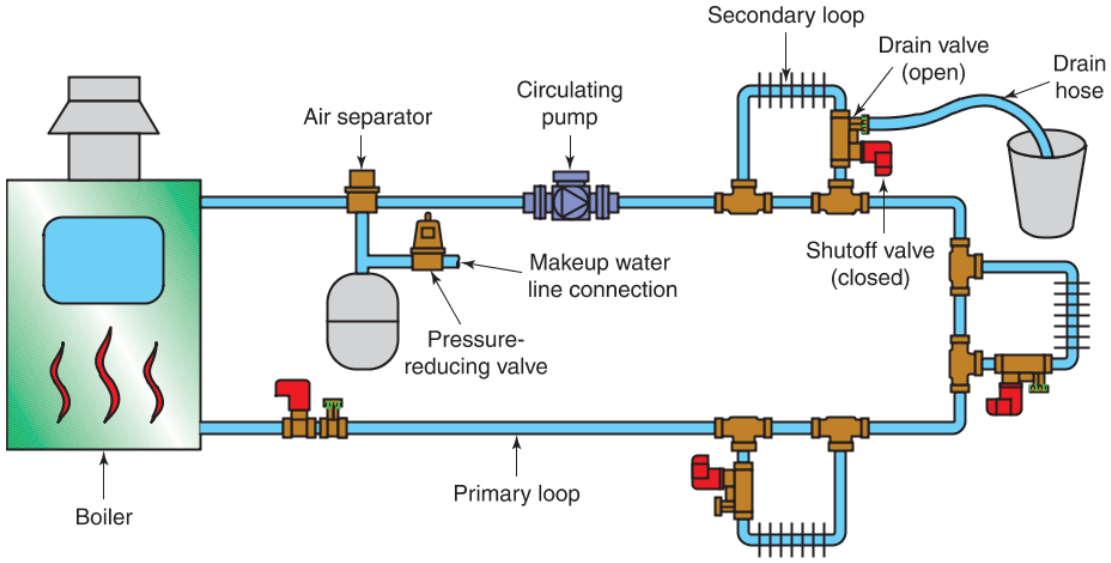

Purging Secondary Loop

Goodheart-Willcox Publisher

Figure 39-56. Setup for purging a one-pipe system with primary and secondary loops.

Copyright Goodheart-Willcox Co., Inc.

on the next secondary loop. Purge the second secondary loop as described in the previous step. Repeat this step for each secondary loop in the system.

6. When the primary loop and all secondary loops have been purged, shut off the bypass at the pressure-reducing valve and disable the valve's fast-fill handle. Remove the hose and open all shutoff valves.
7. Double check the system to ensure that all shutoff valves have been reopened. Check the cold boiler pressure and adjust the pressure-reducing valve as needed.
8. Start the boiler and check for leaks. When the boiler reaches proper operating temperature, check the boiler pressure and make sure the terminal units are heating up properly.

Purging a Two-Pipe Zoned System with Zone Circulating Pumps

Two-pipe zoned systems typically control flow through the zones using zone valves or separate circulating pumps for each zone. The following procedure describes how to purge a zoned system equipped with zone circulating pumps. Refer to **Figure 39-57** as you follow this procedure.

1. Turn off the boiler and allow it to cool down.

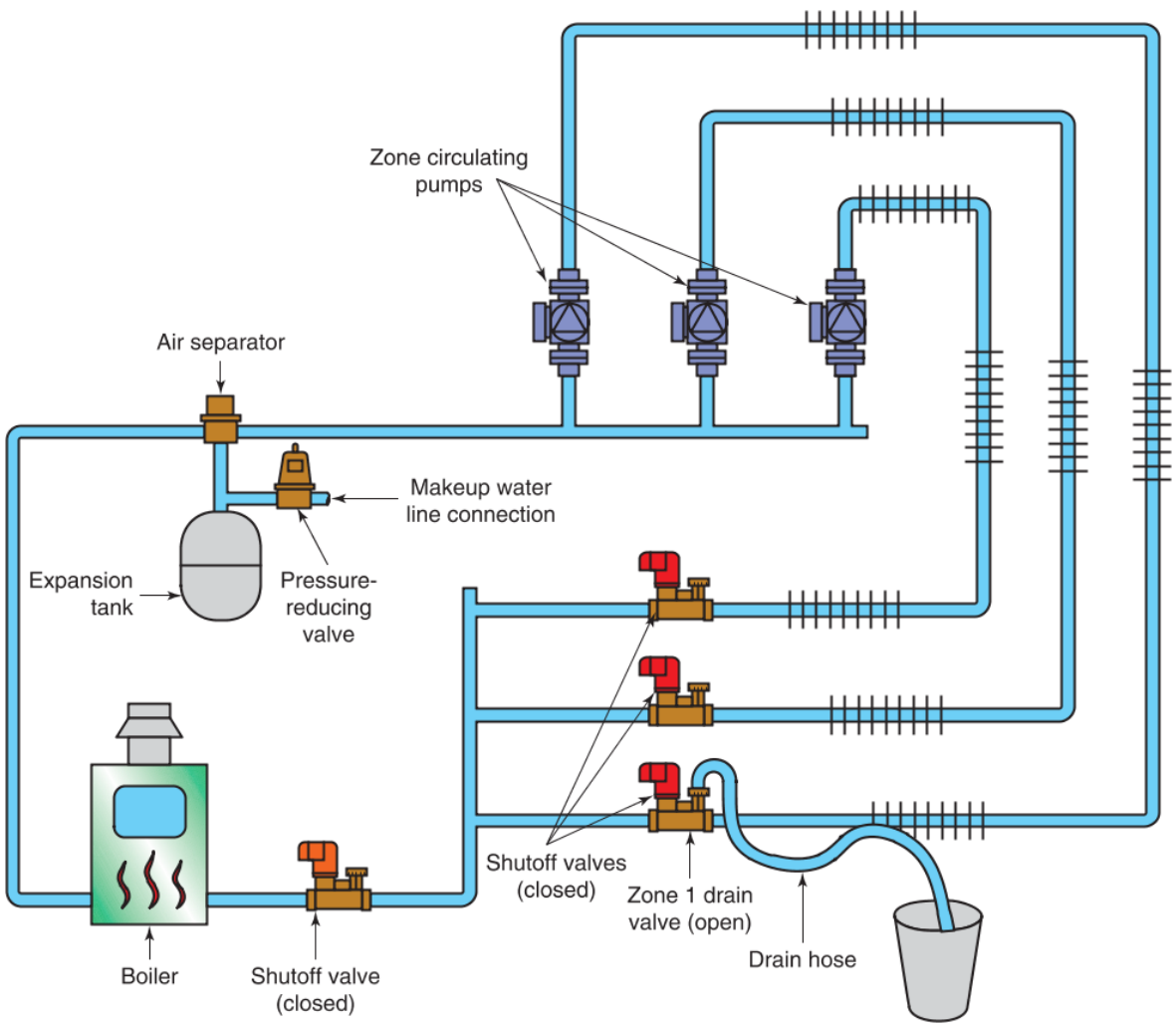

Goodheart-Willcox Publisher

Figure 39-57. Setup for purging a two-pipe zoned system with zone circulating pumps.

Copyright Goodheart-Willcox Co., Inc.

2. Close the shutoff valves in the return lines of every zone.
3. Close the shutoff valve in the boiler return line.
4. Attach a hose to the drain valve in the return line of the first zone. Run the other end of the hose to a drain or bucket.
5. Open the bypass at the pressure-reducing valve in the makeup water line. Also, engage the fast-fill handle on the pressure-reducing valve.
6. Open the drain valve in the return line of the first zone until no bubbles are visible in the water. Then, close the drain valve and move the hose and bucket to the next zone.
7. Repeat the previous step for every zone in the system.
8. When the last zone has been purged, open all of the shutoff valves for the zones.
9. Move the hose to the drain valve in the boiler return line.
10. Open the drain valve in the boiler return line and keep it open until there are no bubbles in the water.
11. After closing the drain valve, remove the hose and open the shutoff valve in the boiler return line.
12. Shut off the bypass at the pressure-reducing valve and disable the valve's fast-fill handle.
13. Double check the system to ensure that all shutoff valves have been reopened. Check the cold boiler pressure and adjust the pressure-reducing valve as needed.
14. Start the boiler and check for leaks. When the boiler reaches proper operating temperature, check the boiler pressure and make sure the terminal units are heating up properly.

Purging a Two-Pipe Zoned System with Zone Valves

The following procedure describes the steps used to purge a two-pipe zoned system equipped with zone valves rather than zone circulating pumps. Refer to **Figure 39-58** as you follow this procedure.

1. Turn off the boiler and allow it to cool down.
2. Close the shutoff valves in the return lines of every zone.
3. Close the differential pressure bypass valve in between the main water supply and water return lines.
4. Close the shutoff valve in the boiler return line.
5. Open the bypass at the pressure-reducing valve in the makeup water line. Also, engage the fast-fill handle on the pressure-reducing valve.
6. Manually open the zone valve for the first zone.
7. Connect a hose to the drain valve in the first zone. Open the drain valve and keep it open until there are no more bubbles in the stream of water coming from the hose directed into the bucket. Then, close the drain valve.
8. Manually close the zone valve for the first zone.
9. Repeat Steps 6 through 8 for each zone in the system.
10. When every zone has been purged, move the hose to the drain valve in the boiler return line.
11. Open the shutoff valves and zone valves for each of the zones. Also, open the differential pressure bypass valve.
12. Open the drain valve in the boiler return line and keep it open until there are no more bubbles in the water coming from the hose. Then, close the drain valve.
13. Remove the drain hose and open the shutoff valve in the boiler return line.
14. Shut off the bypass at the pressure-reducing valve and disable the valve's fast-fill handle.
15. Double check the system to ensure that all shutoff valves have been reopened. Check the cold boiler pressure and adjust the pressure-reducing valve as needed.
16. Start the boiler and check for leaks. When the boiler reaches proper operating temperature, check the boiler pressure and make sure the terminal units are heating up properly.

Purging a Hydronic System Filled with Glycol Solution

If a hydronic system is filled with a glycol solution, the system should be purged using a technique that reclaims the solution. This

Copyright Goodheart-Willcox Co., Inc.

is accomplished by using a transfer pump to recirculate the solution that is drained from the system. A variation of this technique can be used to add glycol solution to a system. Refer to **Figure 39-59** as you follow this procedure.

1. Turn the boiler off and let it cool down.
2. Attach a hose to the drain valve in the boiler return line and place the other end of the hose in a bucket. Close the shutoff valve in the boiler return line.
3. Attach a hose to the inlet of a transfer pump and place the other end of the hose in the bucket.
4. Attach a hose to the outlet of the transfer pump and attach the other end to the drain valve in the water supply line.
5. Open the drain valve in the boiler return line.
6. When water has covered the ends of both hoses in the bucket, open the drain valve in the water supply line and turn on the transfer pump.
7. Allow the water to circulate and the pump to run until there are no more bubbles appearing in the bucket. Be sure to keep the ends of both hoses at the bottom of the bucket and completely submerged during this process.

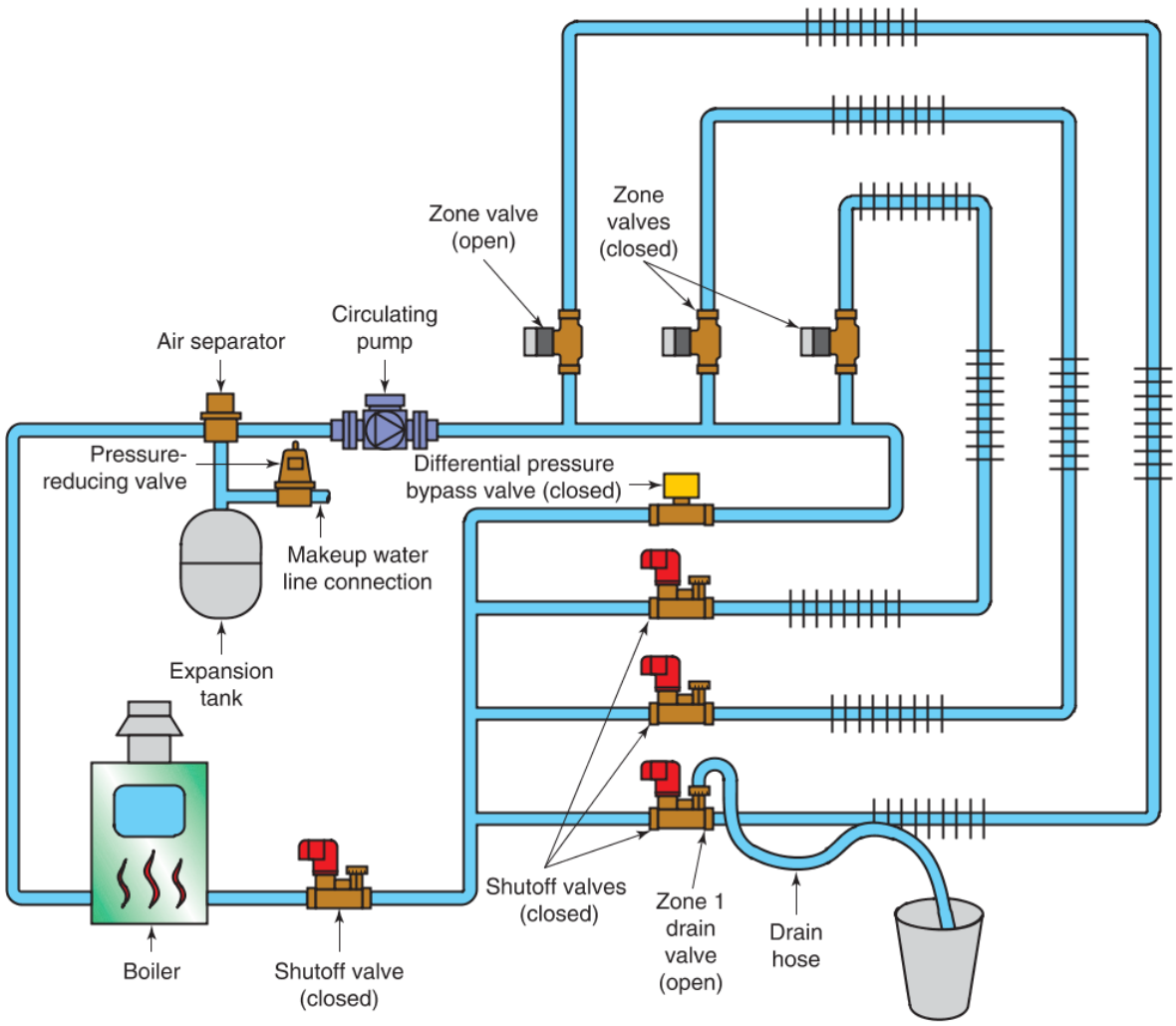

Goodheart-Willcox Publisher

Figure 39-58. Setup for purging a two-pipe zoned system with zone valves.

Copyright Goodheart-Willcox Co., Inc.

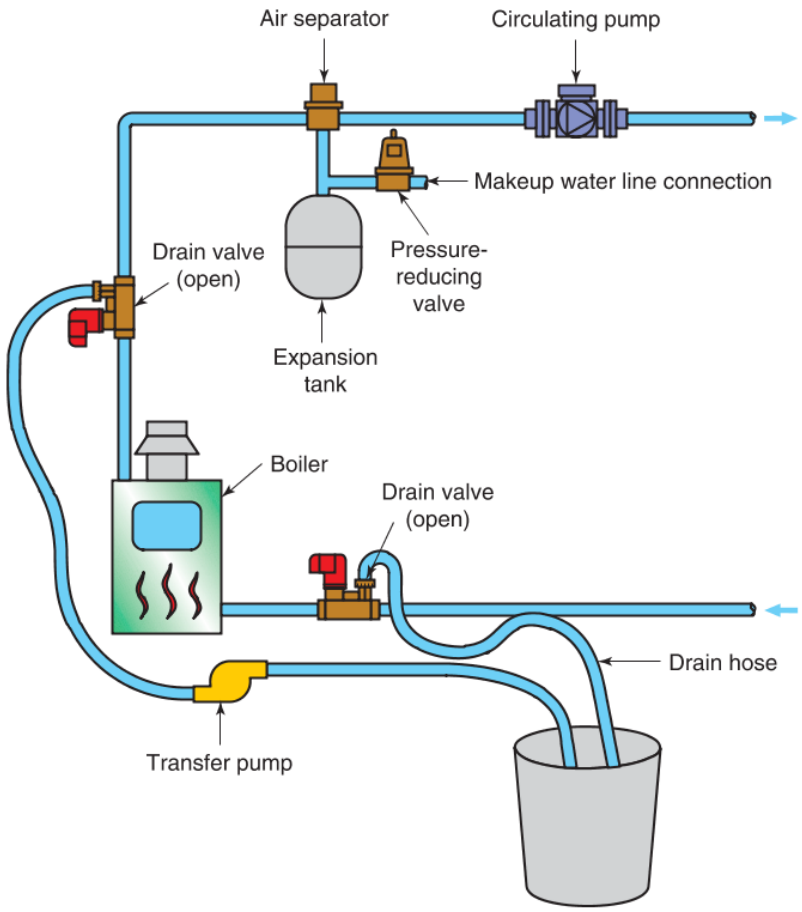

Goodheart-Willcox Publisher

Figure 39-59. If a hydronic system is filled with a glycol solution, the fluid drained from the system is captured in a bucket during the purging process. A transfer pump then circulates the drained fluid back into the system.

8. When no more bubbles appear in the bucket, turn off the transfer pump and close both drain valves.
9. Disconnect the hoses and the transfer pump.
10. Double check the system to ensure that all shutoff valves have been reopened. Check the cold boiler pressure and adjust the pressure-reducing valve as needed.
11. Start the boiler and check for leaks. When the boiler reaches proper operating temperature, check the boiler pressure and make sure the terminal units are heating up properly.

39.5.5 Expansion Tank Problems

The expansion tank in a hydronic system provides space for water expansion and helps to maintain a consistent pressure in the system. If the tank becomes waterlogged, it fails to function properly. This can lead to a variety of symptoms, including increased system pressure and the potential release of water through the pressure-relief valve.

If the expansion tank is waterlogged, the water in the system has nowhere to go as it heats up and expands. As a result, system pressure builds up until it exceeds the pressure limit of the pressure-relief valve. The valve opens and releases water to lower the system pressure. When the boiler cycles off, the water in the system cools and contracts, lowering the system pressure further. The pressure-reducing valve then allows more fresh water (containing more air) into the system. If this continues, the inside of the system will become corroded from the minerals and chemicals that are commonly found in untreated tap water.

One method of checking for a waterlogged expansion tank is to compare the temperature at the bottom

Copyright Goodheart-Willcox Co., Inc.

of the tank with the temperature at the top of the tank. If the tank is hot from top to bottom, it is waterlogged. The portion of the tank containing air should remain relatively cool, even if warm water enters the other half of the tank. Water leaking from the pressure-relief valve every time the boiler cycles on is another indication that the expansion tank may be waterlogged or undersized and should be recharged or replaced.

Recharging a Horizontal Expansion Tank

If an older-style, horizontal expansion tank becomes waterlogged, the excess water can be drained from the tank to restore proper function.

1. Turn off the boiler and allow the system to cool down.
2. Close the shutoff valve to isolate the expansion tank or shut off the makeup water line.
3. Connect a hose to the combination valve at the bottom of the tank.
4. Open the combination valve and allow several gallons of water to drain from the tank. As the water drains, air is drawn in through the combination valve to replace it.
5. Close the combination valve and remove the hose.
6. Open the shutoff valve to the expansion tank or reopen the makeup water line.
7. Turn on the boiler and let it run for one to two hours to check for proper operation of the expansion tank.

Recharging a Diaphragm Expansion Tank

Some diaphragm expansion tanks can be recharged if they become waterlogged. The following procedure explains how to add an air charge to these tanks. If the tank will not hold an air charge, the diaphragm is likely ruptured and the tank needs to be replaced.

1. Turn off the boiler and allow the system to cool down.
2. Shut off the makeup water line.
3. Remove the cap from the air valve on the expansion tank and use a pressure gauge to measure the air pressure in the tank.
4. Use a bicycle pump to increase air pressure if necessary. Recheck the pressure after every two or three strokes of the pump to avoid overcharging the tank.
5. Replace the cap on the expansion tank air valve and reopen the makeup water line.
6. Turn on the boiler and allow it to run for one to two hours to check for proper operation of the expansion tank.

39.5.6 Other Hydronic System Problems

If a hydronic system is providing uneven heating, begin by making sure there are no air blockages. Check for the proper operation of circulating pumps, zone valves, and thermostatic controls. If the system components are functioning properly, but the system is still providing uneven heating, it may be necessary to perform a room-by-room heat loss calculation and adjust the balancing valves to bring the system into balance.

Unusual noises in the system can be caused by a number of things. Air in the system can cause noises in the piping. Broken or poorly lubricated pumps can also be the source of unusual noises in the system. The pipes themselves can cause noise as they expand and contract, especially if they are tightly clamped to their hangers or are in contact with the edges of the openings they pass through. Expansion joints help eliminate this problem. When looking for the source of unusual noises, work systematically to eliminate potential causes until the source of the noise is found.

39.5.7 Servicing a Steam Heating System

A steam heating system should be checked once each month during the heating season. Start by checking the water level sight glass and the pressure gauge. The water level sight glass must show the boiler water level at one-third to one-half full.

If the water level is high, drain the system to the correct lower level. If the water level is low but still shows in the sight glass, add water. Water should be added until the level is correct. After filling the boiler to the correct level, close the fill valve completely. If no water shows in the water level sight glass or if the pressure gauge is above normal, shut the system off at once. Allow the boiler to completely cool before adding water.

Operating the system with a low water level can result in short cycling. Brief cycling periods cause rapid temperature changes in the boiler. After several thousand cycles, the boiler walls or tubes may crack.

Copyright Goodheart-Willcox Co., Inc.

For this reason, it is important to ensure that the proper level is maintained during operation.

When checking water level, note that the water level sight glass may trap water if its openings are clogged. This could make it appear that the water level is higher than it really is. Trust the reading only if the system is clean and the sight glass and its connections have been cleaned recently. Some systems are equipped with petcocks (small drain valves) that can be used to verify the boiler water level.

After checking the water level in the boiler, check the boiler's safety and control components. When checking the pressure-relief valve, make sure it is equipped with a discharge tube to safely divert the discharge away from people and equipment. Pull the lever open briefly to verify that it is not stuck closed. Water or steam should immediately flow from the valve. If no steam or water comes out, shut off the system at once. Allow the system to cool down and then replace the pressure-relief valve. Also, check the low-water cutoff by opening the boiler drain valve. The low-water cutoff should operate right away by cutting off all fuel and electrical power. If it does not operate, shut down the unit and service the low-water cutoff.

Safety Note

Steam Heating System Safety

A steam heating system should be serviced with great care. Escaping steam or hot water can cause severe burns. A boiler can explode if the steam pressure is permitted to exceed the boiler safe pressure limit. Wear goggles when opening petcocks and valves. Stand to one side to prevent burns from steam or hot water, and do not allow the escaping steam or hot water to spill on anyone.

Continue steam heating system service by inspecting the terminal units. If one radiator is cool while the others are hot, it is not receiving steam. This problem may be caused by one of the following component malfunctions:

- The radiator valve is closed. Either the thermostat for the valve or the valve itself is not working.
- The radiator is air-bound. This indicates the air vent is not working.
- The radiator is filled with condensed water. This indicates the steam trap is not working.

Lightly tapping the suspected component with a rubber mallet may jar the component so that it begins functioning again momentarily. Once the faulty component is identified, shut down the system and allow it to cool down. Reduce the system pressure to atmospheric pressure through purging and replace the faulty component. Restart the system and keep a close eye on the system pressure while the system heats up. Check the system for proper operation.

39.6 Preparing a Boiler for the Heating Season

Before a boiler is put into service for the heating season, it requires preventive maintenance and a thorough inspection. The annual inspection can reveal developing problems, such as leaks and corrosion, that could cause the system to perform unreliably if left unattended. Proper maintenance and operational practices can help to ensure optimal performance, reducing operating costs and increasing equipment life.

Boiler Inspection and Maintenance

Use the following steps to prepare a boiler for operation before the heating season begins.

1. Clean the burner (gas or oil).
2. If the boiler is an oil-fired unit, clean the nozzle. Use a cloth and solvent. Do not use a wire brush, as the bristles may scratch the orifice.
3. Clean and adjust the ignition electrodes.
4. Inspect the insulation and replace it if it is cracked or damaged.
5. Clean the flame detector lens. Operate the detector controls by closing the fuel valve. The detector controls should lock out (lock in the off position).
6. If the unit is gas-fired, clean the pilot light if the boiler has one.
7. Check and tighten all electrical and fuel connections.
8. Oil the blower motors.
9. Check motor temperatures. If warmer than normal, cleaning or new bearings may be necessary.
10. Inspect heat exchanger tubes for soot or fly ash and clean as needed.
11. Inspect and clean the breeching (top of the boiler flue).
12. Cycle the controls. Shut off the makeup water line and open the boiler drain valve to check for proper operation of the low-water cutoff.

Copyright Goodheart-Willcox Co., Inc.

13. Operate all safety and pressure-relief valves and petcocks to check for proper operating condition.

Boiler operation is compromised if there are signs of overheating, excessive scale, excessive corrosion, or damaged pressure vessel components, such as the boiler's heat exchanger. A boiler must also pass a pressure test. Prior to draining the boiler for cleaning, fill it with water. With the boiler at operating pressure, close the water supply and return valves to isolate the boiler from the system. If the boiler pressure drops, the boiler has leaks and will fail inspection. The leaks need to be identified and repaired if possible. Start by checking the valves because they are most susceptible to small leaks that can cause the boiler to fail the pressure test.

Code Alert

Boiler Test

Local building codes typically require boiler systems to pass a post-installation pressure test before they can be put into service. Refer to your local building codes for specific requirements.

Before putting a boiler back in service, crack the valves and check for unusual noises or vibrations prior to fully opening them. If a boiler is operated in conjunction with other boilers, make sure its operating temperature and pressure are the same as the other boilers before opening the water supply and return valves. For steam boilers, be sure to drain condensed water from the steam supply line prior to opening the steam supply valve to avoid slugging condensate into the steam main.

Copyright Goodheart-Willcox Co., Inc.

Chapter Review

Summary

- Hydronic systems use conditioned water or steam to distribute heat. Compared to forced-air heating systems, hydronic heating systems are more efficient at heat transfer, require less room for fluid piping than air ducts require, provide more consistent heating, and do not introduce dust or allergens into the conditioned spaces.
- The basic components of a hydronic system include a boiler, circulating pump, expansion tank, terminal units, and air-removal components. Various valves, such as mixing valves and balancing valves, are used to control the flow of water through the system.
- Impurities in boiler water can cause corrosion and embrittlement in a hydronic system. Chemical scavengers, corrosion inhibiters, and air-removal components can be used to help prevent corrosion caused by contaminants and dissolved gases.
- Series loop and one-pipe hydronic systems supply water to the terminal units and return water to the boiler through a single pipe. Two-pipe hydronic systems supply water to the terminal units through one pipe and return the water to the boiler through a separate pipe. Zoned hydronic systems are split into different zones, each with its own piping, terminals units, zone valve, and room thermostat. A room thermostat maintains each zone's set point temperature by controlling a zone valve or zone circulator pump, which regulates the flow of water through that zone.
- Radiant hydronic systems use plastic or composite tubing directly in contact with a floor, wall, or panel to heat a conditioned space. The water circulating through the tubing warms the surfaces adjacent to it by conduction. Underfloor radiant heating systems can be classified as wet or dry, depending on the installation and use of concrete.
- Combined heating and cooling hydronic systems have both boilers and chillers. In two-pipe systems, the boiler and chiller use the same pipes to supply water to the terminal units. A four-pipe system uses separate pipes to carry water to and from the boiler and to and from the chiller, allowing the boiler and chiller to be operated simultaneously.
- A steam heating system supplies steam to radiators in conditioned spaces. Air vents and steam traps allow air and condensed water to leave the radiators, but not steam. As the steam heats the room, it cools down and condenses, and the condensed water returns to the boiler to be reheated.
- A low-water cutoff automatically shuts down a boiler if the water level gets too low. A flow switch shuts down the system or bypasses part of it when there is inadequate water circulation. An aquastat maintains proper water temperature in the boiler, while a room thermostat controls the temperature in the conditioned space.
- To prepare a hydronic system for initial start-up, circulate a solution of water and the proper chemical treatment through the system, drain it out, and then refill the system with conditioned water. Once the system is operating, balance the system by using a pressure gauge to measure the rate of water flow through each balancing valve.
- Most hydronic system problems fall into one of three categories: electrical, venting, or water circulation. Electrical problems commonly affect system controls. Venting problems affect boiler combustion and may cause the system's rollout switch or blocked-vent switch to shut down the boiler. Most water circulation problems are caused by trapped air. If a system has a significant amount of trapped air in it, it should be purged.
- A steam heating system should be checked once each month during the heating season. Inspection and service of a steam heating system involves checking the boiler's water level, checking the boiler's safety and control components, and inspecting the system's terminal units.
- Before each heating season, a boiler should be carefully checked, and preventive maintenance should be performed on it. Preventive maintenance involves cleaning and inspecting the burner, checking the boiler controls, and testing the safety and pressure-relief valves for proper operation. Boilers and their piping must also pass a pressure test.

Copyright Goodheart-Willcox Co., Inc.

Review Questions

Answer the following questions using the information in this chapter.

1. Which of the following is *not* an advantage of hydronic heating systems compared to forced-air heating systems?
   A. Do not introduce dust or allergens into the conditioned space.
   B. Greater efficiency of heat transfer.
   C. Less sensitive to neglect and require less maintenance.
   D. Provide a more consistent temperature level.
2. Which of the following statements comparing steam and hot-water hydronic systems is *not* true?
   A. Hot-water systems are more efficient than steam systems.
   B. Hot-water systems are now more commonly used than steam systems.
   C. Hot-water systems can adjust water temperature to meet heating demands, which is not possible with steam systems.
   D. Steam systems can be more easily modified to provide chilled water for cooling.
3. What is the reason that conventional boilers operate with a water temperature above 140°F (60°C)?
   A. Most boiler controls can only function at temperatures above 140°F (60°C).
   B. A temperature above 140°F (60°C) swells seals in the circulating pumps, preventing leaks.
   C. A temperature of 140°F (60°C) is required to kill any biological contaminants that might be in the water.
   D. A temperature of 140°F (60°C) is required to prevent combustion gases from condensing.
4. Boiler heat exchangers are typically made out of _____.
   A. aluminum, manganese, or cast iron
   B. cast iron, brass, or molybdenum
   C. cast iron, copper, or steel
   D. steel, brass, or aluminum
5. Which of the following types of water treatment forms a protective coating on the surfaces of a hydronic system?
   A. Alkali treatments.
   B. Chemical scavengers.
   C. Corrosion inhibitors.
   D. All of the above.
6. The release of dissolved gasses from water in a hydronic system is known as _____.
   A. cavitation
   B. deaeration
   C. gas entrainment
   D. liquefaction
7. The purpose of an expansion tank is to _____.
   A. provide space for water to expand as the system heats up
   B. return water to the system as the system cools down
   C. maintain a stable system pressure under varying conditions
   D. All of the above.
8. Which type of hydronic system valve prevents hot water from migrating to higher points in the system when the circulating pump quits operating?
   A. Balancing valve.
   B. Flow-control valve.
   C. Mixing valve.
   D. Pressure-reducing valve.
9. Which type of hydronic system valve helps to distribute heat equally throughout the system?
   A. Backflow preventer.
   B. Balancing valve.
   C. Pressure-reducing valve.
   D. All of the above.
10. Which of the following statements about terminal units is *not* true?
   A. Fan convectors can extract heat from lower-temperature water than a radiator can.
   B. Radiators are available in baseboard, column, and panel styles.
   C. Radiators can be used as terminal units in both steam and hot-water hydronic systems.
   D. Radiators provide the majority of their heating through radiation rather than through convection.

Copyright Goodheart-Willcox Co., Inc.

11. Air vents are designed to _____ from a hydronic system.
    A. capture and release entrained air
    B. release free air
    C. release makeup water
    D. separate and release dissolved air
12. A _____ hydronic system is similar to a series loop system, except that its terminal units are on branch circuits, called secondary loops.
    A. one-pipe
    B. parallel loop
    C. two-pipe
    D. zoned
13. Which of the following hydronic system designs provides the most consistent heat at the terminal units?
    A. One-pipe.
    B. Primary loop.
    C. Series loop.
    D. Two-pipe.
14. Why is a reverse return hydronic system the design that is the easiest to balance?
    A. All supply and return branches are approximately the same length.
    B. All terminal units must have the same capacity.
    C. The circulator simply reverses flow when the call for heat is met, so no balancing is required.
    D. Water flows in both directions through the same length of pipe.
15. In a zoned hydronic system, each zone has its own _____.
    A. room thermostat
    B. terminal units
    C. zone valve
    D. All of the above.
16. Which of the following statements about radiant hydronic systems is *not* true?
    A. They typically use PEX, other plastics, or composite material for tubing.
    B. System tubing is completely enclosed in walls or floors.
    C. Radiant hydronic systems typically circulate water at a cooler temperature than hot-water hydronic systems do.
    D. Radiant hydronic systems typically use radiators as terminal units.
17. A _____ hydronic system has separate supply and return pipes for hot and cold water.
    A. one-pipe
    B. two-pipe
    C. three-pipe
    D. four-pipe
18. A two-pipe steam heating system has _____ that allow condensed water to return to the boiler, but prevent steam from passing.
    A. air vents
    B. condensing traps
    C. low-water cutoffs
    D. steam traps
19. Which of the following best describes the function of an air vent in a steam heating system?
    A. It allows air to exit the system, but prevents steam from exiting.
    B. It allows a small amount of air to enter the system to promote steam generation.
    C. It allows small amounts of steam to escape from the radiator to reduce system pressure.
    D. It opens when the system reaches operating temperature, allowing increased airflow through the radiator.
20. All boilers have a(n) _____ that automatically shuts off the fuel supply if the water temperature or pressure gets too high.
    A. atmospheric burner
    B. gun-type burner
    C. high-limit control
    D. low-water cutoff
21. If a hydronic system is operating with a reduced water level, the _____ may open the makeup water valve to add water to the system.
    A. aquastat
    B. flow switch
    C. low-water cutoff
    D. None of the above.
22. Which hydronic system control monitors the cycle time required to satisfy a call for heat?
    A. Flow switch.
    B. Indoor reset control.
    C. Outdoor reset control.
    D. Room thermostat.
23. When joining tubing of different sizes, a technician should use a(n) _____.
    A. eccentric reducer fitting
    B. expansion joint
    C. flexible joint
    D. riser pipe

Copyright Goodheart-Willcox Co., Inc.

24. Where should an air vent be installed on a one-pipe steam heating system?
    A. About half way up the radiator.
    B. At the inlet of the radiator.
    C. An air vent is not needed on a one-pipe steam system.
    D. On the thermostatic radiator valve.
25. Which of the following is *not* a step in preparing a hydronic system for initial start-up?
    A. Clean the filter screen and refill the system with water.
    B. Fill the boiler with a mixture of water and the proper chemical treatment.
    C. Treat the water with 500 ppm of vinegar.
    D. Use a pressure gauge to determine the proper setting for each balancing valve.
26. Which of the following can prevent a boiler from firing?
    A. A blocked vent.
    B. An inoperative vent damper.
    C. A tripped rollout switch.
    D. All of the above.
27. Which of the following best explains the difference between system purging and system bleeding?
    A. Bleeding removes air from the entire system, and purging removes air from a localized part of the system.
    B. Bleeding removes excess water from the entire system, and purging removes excess water from a localized part of the system.
    C. Purging removes air from the entire system, and bleeding removes air from a localized part of the system.
    D. Purging removes excess water from the entire system, and bleeding removes excess water from a localized part of the system.
28. A waterlogged expansion tank may cause the _____ valve to release water every time the boiler cycles on.
    A. balancing
    B. mixing
    C. pressure-reducing
    D. pressure-relief
29. A steam boiler's water level sight glass should be _____ to one-half full.
    A. one-tenth
    B. one-eighth
    C. one-quarter
    D. one-third
30. Which of the following is *not* a step in preparing a boiler for operation before the heating season begins?
    A. Check for proper operation of the low-water cutoff.
    B. Clean and adjust ignition electrodes.
    C. Operate all pressure-relief valves to check for proper operating condition.
    D. Purge the entire system of excess air.

Copyright Goodheart-Willcox Co., Inc.

CHAPTER 40 Heat Pumps

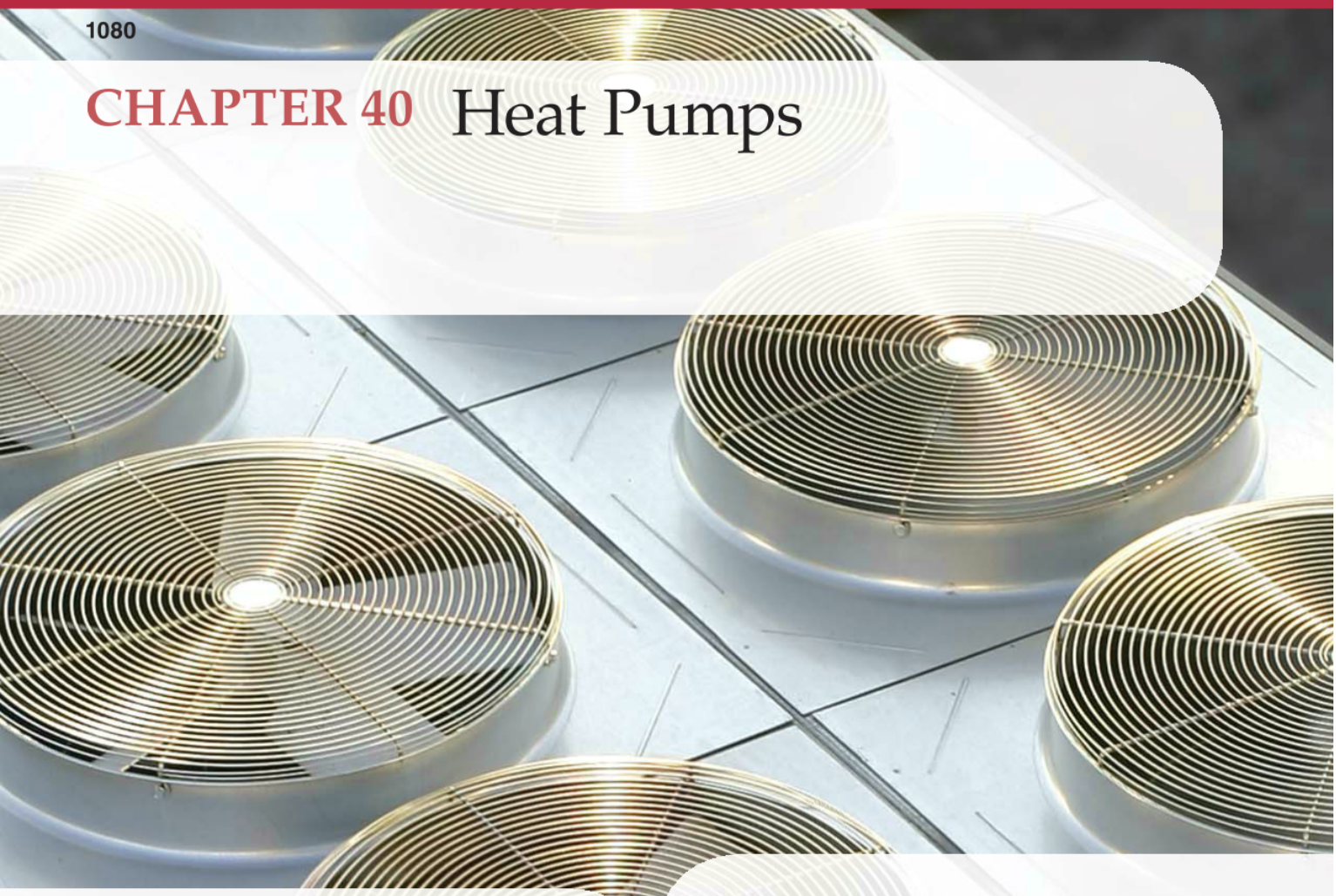

Chapter Outline

40.1 Heat Pump Basics
40.2 Types of Heat Pumps
- 40.2.1 Air-Source Heat Pumps
- 40.2.2 Ground-Source Heat Pumps

40.3 Heat Pump Efficiency
40.4 Heat Pump System Components
- 40.4.1 Accumulators
- 40.4.2 Compressors
- 40.4.3 Metering Devices
- 40.4.4 Reversing Valves
- 40.4.5 Coils and Loops

40.5 Heat Pump Controls
- 40.5.1 Temperature Controls
- 40.5.2 Defrost Controls
- 40.5.3 Auxiliary Heat

40.6 Heat Pumps and Solar Heating Systems
40.7 Heat Pump System Service
- 40.7.1 Heat Pump Installation
- 40.7.2 Heat Pump Maintenance
- 40.7.3 Troubleshooting Heat Pumps

Learning Objectives

Information in this chapter will enable you to:

- Describe the basic operation of a heat pump in heating mode and in cooling mode.
- Summarize the difference between ground-source heat pumps and air-source heat pumps.
- Identify a heat pump system's principal components.
- Explain how a reversing valve operates and how it controls the direction of refrigerant flow through a heat pump.
- Compare and contrast different types of coils and loops used in heat pump systems.
- List two common methods used to defrost heat pumps.
- Understand how auxiliary heat is used in conjunction with heat pumps.
- Summarize how heat pumps can be combined with solar heating systems.
- Perform routine maintenance and service on heat pump systems.

Technical Terms

air coil
air-source heat pump (ASHP)
air-to-air heat pump
air-to-water heat pump
auxiliary heat
balance point
biflow bypass TXV
biflow metering TXV
biflow thermostatic expansion valve
charge compensator tank
closed-loop ground-source heat pump system
demand defrost
direct-acting reversing valve
direct-exchange (DX) heat pump
dirty sock syndrome
Environmental Impact Assessment (EIA)
flow check piston
ground coil
ground loop
ground-source heat pump (GSHP)
heat pump
indoor coil
open-loop ground-source heat pump system
outdoor coil
pilot-operated reversing valve
reverse cycle defrost
reversing valve
riser
water coil
water loop
water-source heat pump (WSHP)

Review of Key Concepts

Reviewing these concepts from earlier chapters will help you understand new concepts presented in this chapter:

- A compression refrigeration system uses mechanical energy to drive the refrigeration process. The four processes that make up a compression refrigeration system are compressing, condensing, metering, and evaporating. (Chapter 6)
- A heat sink is a surface or substance that absorbs heat transferred by a warmer surface or substance. (Chapter 27)
- An air handler uses a fan to distribute conditioned air to a building's conditioned space through a series of supply and return ducts. (Chapter 33)
- In electric heat defrost, electric heating elements are installed in an evaporator, around it, or within the refrigerant passages and energized to melt ice and frost buildup. Electric heating elements can be used for heating conditioned air or for defrosting purposes. (Chapter 21)

Introduction

A ***heat pump*** is a compression refrigeration system that can reverse the circulating flow of refrigerant in order to add heat or remove heat from a conditioned space, depending on its mode of operation. Heat is absorbed by one coil in one location and released by another coil in another location. In this way, heat pumps are similar to standard comfort cooling systems. However, unlike comfort cooling systems, heat pumps can reverse the flow of refrigerant in order to change their operation from cooling to heating. A reversing valve controls the direction of refrigerant flow through a heat pump's refrigerant circuit. The direction of refrigerant flow determines whether the heat pump heats or cools a conditioned space. When the refrigerant flow is reversed, the coil that previously functioned as an evaporator begins functioning as a condenser. The other coil, which functioned as a condenser, now begins functioning as an evaporator. Heat pumps can use a variety of system arrangements and distribution methods. These can be found in residential, commercial, and industrial applications.

Video

- Heat Pump Basics

40.1 Heat Pump Basics

Basic heat pump theory rests on the principle that heat moves from warmer substances to cooler substances. Thus, a coil that is cooler than its surroundings will absorb heat, and a coil that is warmer than its surroundings will release heat. For instance, if one refrigerant coil of a heat pump is mounted outdoors and maintains a refrigerant temperature of 0°F (–18°C), it removes heat from the air even if the outside temperature is only 10°F to 15°F (–12°C to –9°C). The low pressure applied to the refrigerant in the coil lowers its temperature and causes it to absorb heat from the outside air. This low-pressure vapor refrigerant is then compressed, causing its temperature to increase to 120°F to 140°F (49°C to 60°C). It is pumped to a coil mounted indoors where it releases heat to the cooler indoor space as the vapor condenses.

Pro Tip

Heat Pump Coil Names

Since a heat pump's two heat exchanger coils can switch functions depending on operational mode, neither coil is permanently called an evaporator or a condenser. The refrigerant coil that is located inside and warms or cools the air for the conditioned space is called the ***indoor coil***. The refrigerant coil that absorbs or expels heat for the indoor coil is called the ***outdoor coil***, whether it is located inside or outside a building. The exact location of an outdoor coil depends on the type of system.

When a heat pump is operating in heating mode, the outdoor coil functions as an evaporator by absorbing heat. The indoor coil functions as a condenser by releasing heat. Low-pressure liquid refrigerant enters the outdoor coil, picks up heat from the outdoor air, and vaporizes. The low-pressure refrigerant vapor is drawn into the compressor, compressed to a high temperature and pressure, and then pumped to the indoor coil. Since the refrigerant vapor's temperature is higher than the indoor air temperature, it releases heat indoors and condenses. As the refrigerant vapor becomes liquid and flows back to the outdoor coil, the cycle repeats. See **Figure 40-1A**.

When a heat pump is operating in cooling mode, a heat pump's reversing valve changes position, causing the refrigerant to flow through the system in the opposite direction. This switches the evaporator and condenser functions performed by the indoor and outdoor coils. The indoor coil now functions as an evaporator, and the outdoor coil functions as a condenser.

Liquid refrigerant flows through the indoor coil where it absorbs heat and boils into a vapor. The compressor compresses the refrigerant vapor to a high temperature and high pressure and pumps it to the outdoor coil. The air surrounding the outdoor coil is cooler than the high-temperature refrigerant in the coil, allowing the compressed refrigerant vapor to give up its heat to the outside air. The refrigerant condenses and subcools in the outdoor coil. From there, it

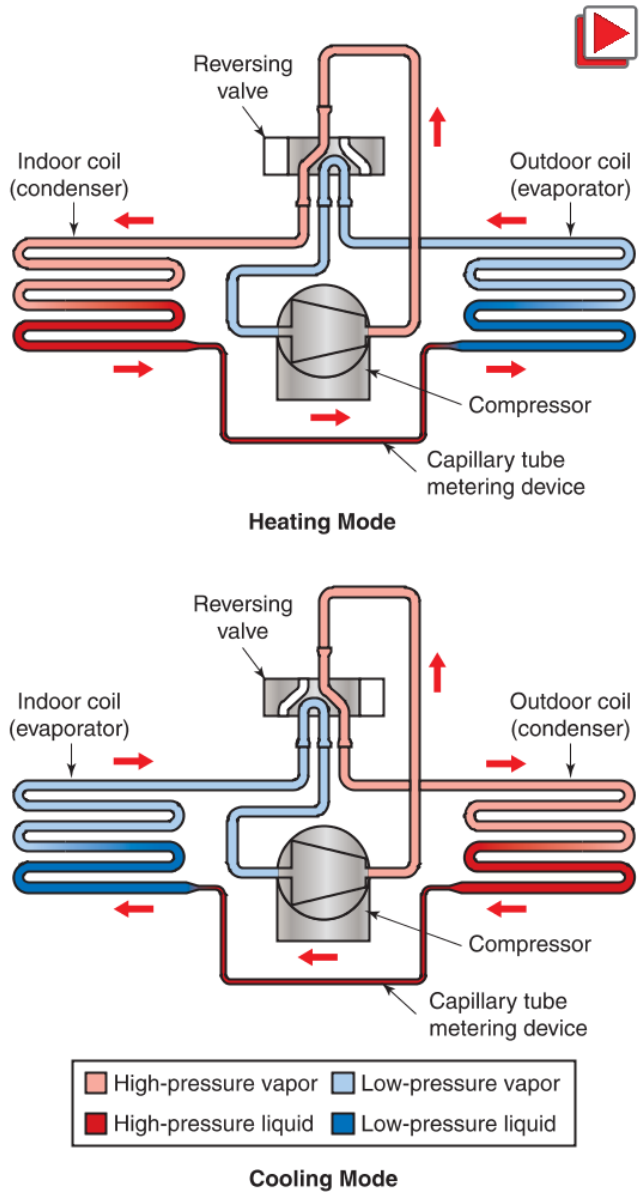

Goodheart-Willcox Publisher

Figure 40-1. Both the heating and cooling modes of a heat pump. Heating Mode—When the heat pump is in heating mode, the reversing valve is set so that the outdoor coil acts as an evaporator, and heat is released by the indoor coil inside the building. Cooling Mode—When the heat pump is in cooling mode, the reversing valve is set so that the indoor coil acts as an evaporator, and heat is released by the outdoor coil outside the building.

Copyright Goodheart-Willcox Co., Inc.

flows back to the indoor coil, repeating the cycle. See **Figure 40-1B**.

Although the direction of refrigerant flow through each coil changes depending on the reversing valve, the direction of refrigerant flow through the compressor is always in the same direction.

Self-contained (packaged) units with a capacity between 1/2 ton and 25 tons are common, and large systems with a capacity between 100 tons and 1000 tons are in use as well. Window units with a capacity between 1/2 ton and 2 tons are also available. In addition, heat pumps can be used for more than just conditioning a living space. Domestic water heating and heat recovery from industrial processes are two examples of alternative heat pump applications.

40.2 Types of Heat Pumps

The earth absorbs energy from the sun and stores it as heat energy in the ground or air. A heat pump can extract this energy by transferring the heat from the ground or air to a fluid medium, such as water or a refrigerant. Heat pumps can be classified according to their heat sources. If a heat pump transfers heat from the ground or a body of water to a conditioned space, it is referred to as a *ground-source* heat pump. If a heat pump transfers heat from the outside air to a conditioned space, it is referred to as an *air-source* heat pump.

40.2.1 Air-Source Heat Pumps

An ***air-source heat pump (ASHP)*** is a heat pump that uses the outside air as a heat source or a heat sink for producing the desired temperature in a conditioned space. Air-source heat pump installations are ideal where winter heating loads are almost the same as summer cooling loads. In general, these installations are most satisfactory when the outdoor air temperature in the winter remains above or only occasionally drops below 32°F (0°C). However, newer technology and systems can handle air temperatures below this level. Air-source heat pumps can be further divided into *air-to-air* heat pumps and *air-to-water* heat pumps.

Air-to-air heat pumps transfer heat between outside air and air inside a conditioned space using forced air as the indoor heat distribution method. Air-to-air heat pumps are a fairly popular type of heat pump and come in two styles: split systems and packaged systems.

Many split system heat pumps have an exterior appearance similar to that of a split air-conditioning system. They consist of an outdoor unit (containing the outdoor coil, a compressor, and a fan) and an indoor unit (containing the indoor coil and a blower). Occasionally, a split heat pump's indoor unit is incorporated with a gas or oil furnace, and the indoor coil is installed in the furnace's plenum, **Figure 40-2**.

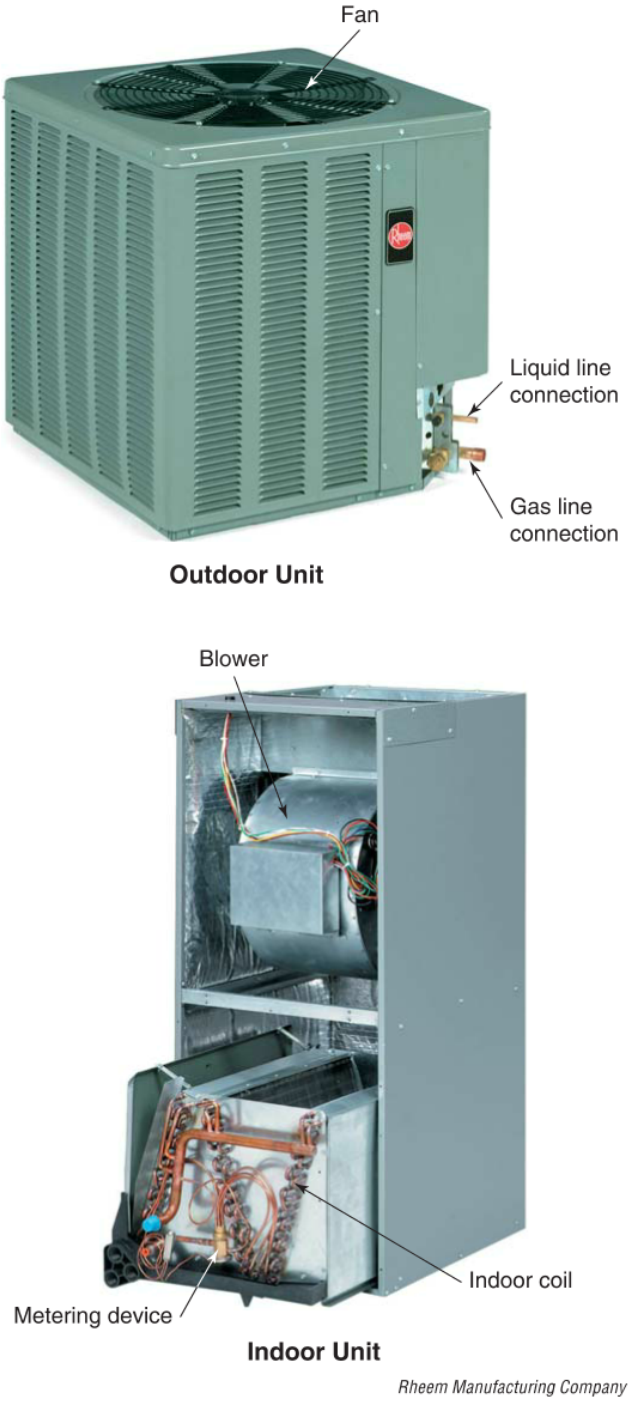

Rheem Manufacturing Company

Figure 40-2. An air-to-air heat pump's indoor and outdoor units.

Copyright Goodheart-Willcox Co., Inc.

Pro Tip

Liquid and Gas Lines

In a split air-conditioning system, the lines that connect the condenser and evaporator are called the *liquid line* and *suction line*. In a heat pump system, however, the larger refrigerant line that connects the indoor and outdoor units is called the *gas line*, because it always carries refrigerant gas. In the summer, the gas line carries cold gas from the indoor unit to the outdoor unit, and in the winter, it carries hot gas from the outdoor unit to the indoor unit. The smaller refrigerant line is still called the *liquid line* because it always carries liquid refrigerant, even though the liquid flows in different directions during summer and winter.

Similar to a packaged air-conditioning system, a packaged heat pump system contains all the heat pump components in a single housing. The packaged system is installed outdoors, which means supply and return ductwork must extend through an exterior wall or roof to and from the unit, **Figure 40-3**.

An air-to-air heat pump can also be used in a ductless system. This type of system uses a single outdoor unit installed on a pad or mounted on brackets. Tubing and wiring connect the outdoor unit to one or more indoor units, depending on the manufacturer. See **Figure 40-4**.

Motor-driven fans in both indoor and outdoor units improve heat transfer by blowing air across the coil surfaces. The location of the indoor unit varies, depending on the building's heating and cooling needs.

Rheem Manufacturing Company

Figure 40-3. Packaged heat pump systems have an exterior appearance similar to packaged air-conditioning systems. They make servicing easier because all the system components can be accessed from a central location outside a building.

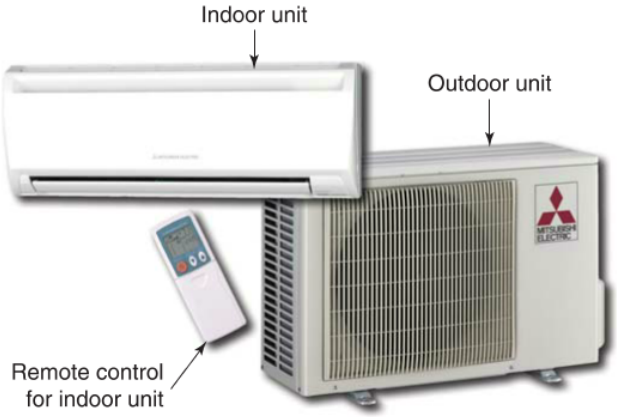

Mitsubishi Electric, HVAC Advanced Products Division

Figure 40-4. A ductless heat pump system consists of a single outdoor unit, one or more indoor units, and individual controls for each indoor unit.

In a system with multiple indoor units, each unit has its own independent controls, and some systems even have remote controls. Ductless heat pump systems are often used in new and retrofitted offices, homes, and motels where conventional window or wall units are not desirable or applicable. The main advantage of a ductless heat pump system with multiple indoor units is that it can provide individual temperature control to multiple spaces using a single outdoor unit. For more information on ductless systems, see Chapter 31, *Ductless Air-Conditioning Systems*.

Air-to-water heat pumps transfer heat between outside air and air inside a conditioned space using a hydronic system for heat distribution. Water passes through a water coil heat exchanger and absorbs heat from the refrigerant when the heat pump is in heating mode. When the heat pump is in cooling mode, the water releases heat that is absorbed by the refrigerant in the water coil heat exchanger. Air-to-water heat pumps are often used for domestic water heating and in radiant hydronic systems.

40.2.2 Ground-Source Heat Pumps

A ***ground-source heat pump (GSHP)*** is a heat pump that uses the earth as a heat source or a heat sink for producing the desired temperature in a conditioned space. By circulating water or refrigerant through tubing placed underground or underwater, ground-source heat pumps use the earth's thermal energy to heat or cool a conditioned space. Although outdoor air temperatures may vary by season, the temperature underground or in a body of water remains relatively constant. This allows a ground-source heat

Copyright Goodheart-Willcox Co., Inc.

pump to produce consistent heating and cooling temperatures year round.

Pro Tip

Geothermal Heat Pumps

Since ground-source heat pumps use heat from the earth (geothermal heat) as their source, they are also called *geothermal heat pumps*.

An air-source heat pump's efficiency relies heavily on outdoor air temperature. However, in certain climates, outdoor temperatures can vary drastically, even over the course of a single day. Ground-source heat pumps avoid this temperature variation because their outdoor coil is placed underground or underwater. By determining the range of temperatures to which the outdoor coil will be exposed, a technician can design a ground-source heat pump to function within these parameters with improved system efficiency.

Pro Tip

Outdoor Coil

The term *outdoor coil* is an all-encompassing term that includes the heat exchangers used in both air-source and ground-source heat pumps. In a ground-source heat pump system, the outdoor coil is often referred to as a *ground coil* if it circulates refrigerant underground. It is called a *ground loop* if it circulates water in tubing buried underground or a *water loop* if it circulates water in tubing placed underwater.

Thinking Green

Ground-Source Heat Pump Efficiency

Ground-source heat pumps are recognized by the Environmental Protection Agency as the most efficient heating and cooling systems. They have the highest cooling efficiency and lowest annual operating costs among heat pumps. In addition, ground-source heat pumps offer a renewable energy source that can be used anywhere in the United States and Canada.

Ground-source heat pumps use two different methods to exchange heat with the earth or a body of water: direct exchange and water source. ***Direct-exchange (DX) heat pumps*** are ground-source heat pumps that circulate refrigerant through an outdoor coil that is placed in direct contact with the earth. These heat pumps circulate refrigerant through tubing buried underground. A direct-exchange heat pump system consists of a sealed, underground outdoor coil (ground coil); an indoor coil; a compressor; a reversing valve; and a metering device, **Figure 40-5**.

The majority of ground-source heat pump systems in the United States are water-source systems. ***Water-source heat pumps (WSHP)*** circulate water through a separate, secondary circuit, called a ground loop placed underground or a water loop placed underwater. This water circuit is physically isolated from any refrigerant circuit. The ground or water loop uses the water as a heat-transfer medium to exchange heat with the earth or body of water. This water also flows through a water coil, which is essentially a water-to-refrigerant heat exchanger (often located indoors). This may be similar to water-cooled heat exchangers found in other types of refrigeration systems. Heat transfers in either direction between the water and the refrigerant in the heat pump system, **Figure 40-6**.

When water-source heat pumps are used in moderate and colder climates, it may be necessary to use a solution of water and glycol in the ground or water loop to prevent ice from forming in the heat pump's water coil.

When a water-source heat pump is in heating mode, low-pressure liquid refrigerant flows through the water coil. The liquid refrigerant boils into a low-pressure vapor as it absorbs heat from the water being circulated through the ground or water loop. The vaporized refrigerant is then compressed and discharged into the indoor coil. In this case, the indoor coil functions as a condenser because the vaporized refrigerant turns back into a liquid after giving up its heat to the air circulating to the conditioned space, **Figure 40-7**.

In the summer, the flow of refrigerant is reversed to remove heat from a building. In this case, the indoor coil acts as an evaporator, and the water coil acts as a condenser. The water circulating through the ground or water loop absorbs heat from the refrigerant in the water coil and releases it underground, **Figure 40-7**.

In each case, the refrigerant flow through the compressor is in the same direction. The change from heating mode to cooling mode is accomplished entirely by operation of the reversing valve.

Ground-source heat pump systems can be further classified as open-loop systems or closed-loop systems. ***Closed-loop ground-source heat pump systems*** continuously circulate the same water or refrigerant. Closed-loop systems are used where there is not enough water to support an open-loop system or where local codes prohibit open-loop systems, **Figure 40-8**.

On the other hand, ***open-loop ground-source heat pump systems*** use wells or lakes as their water source. The well or lake serves as both the supply (pump) and discharge (dump) source for the system. Because the water is used by the system and then returned back to the earth, open-loop heat pump systems require a large quantity of clean water.

Copyright Goodheart-Willcox Co., Inc.

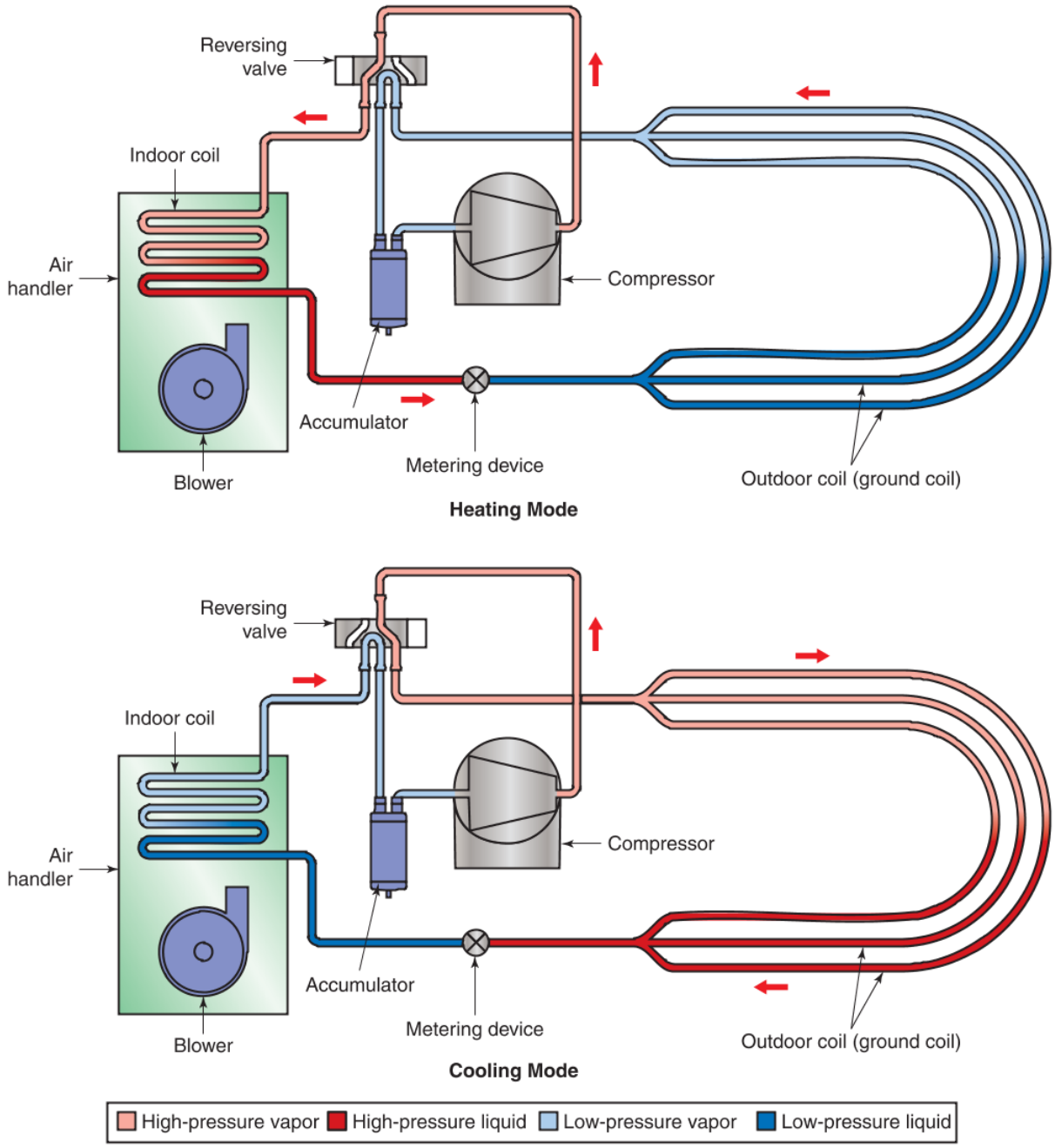

Goodheart-Willcox Publisher

Figure 40-5. In a direct-exchange heat pump system, the refrigerant exchanges heat directly with the earth by flowing through an outdoor coil that is buried underground.

Caution

Outdoor Coil Placement

A ground-source heat pump's outdoor coil may be placed in still water, such as a pond or lake. However, an outdoor coil cannot be placed in a flowing body of water because of the risk that the coil could be struck by a moving piece of ice or debris.

40.3 Heat Pump Efficiency

A number of methods have been developed for gauging heat pump efficiency. These methods are often recognized by their acronyms:

- Energy efficiency ratio (EER).
- Seasonal energy efficiency ratio (SEER).

Copyright Goodheart-Willcox Co., Inc.

ClimateMaster

Figure 40-6. In a water-source heat pump system, the water coil exchanges heat between the water that travels through the ground or water loop and the refrigerant that circulates through the system's outdoor coil. Even though this refrigerant coil is located indoors, it is considered the outdoor coil, as it is transferring heat between the refrigerant and outdoors through the water coil.

- Heating seasonal performance factor (HSPF).
- Coefficient of performance (COP).

The higher the number rating on a heat pump, the more efficient the heat pump is. Thus, a 13-SEER heat pump is more efficient than a 12-SEER heat pump, and a 7-HSPF heat pump is more efficient than a 5-HSPF heat pump. For more information on how to calculate heat pump efficiency, see Chapter 46, *Energy Conservation*.

The Environmental Protection Agency (EPA) and the Department of Energy (DOE) have also developed a system called Energy Star for labeling energy-efficient, cost-saving products. Items meeting Energy Star guidelines can save consumers 10% to 40% on heating and cooling costs, **Figure 40-9**.

Thinking Green

Heating and Cooling Costs

Residential energy costs account for 20% of all US energy consumption, and nearly 50% of all energy used in the home is for heating and cooling. Purchasing energy-efficient heat pump systems can reduce energy use, save money, and benefit the environment. In an effort to promote energy efficiency, the federal government, state governments, and local municipalities may provide tax incentives to homeowners who replace older, less-efficient systems with high-efficiency units.

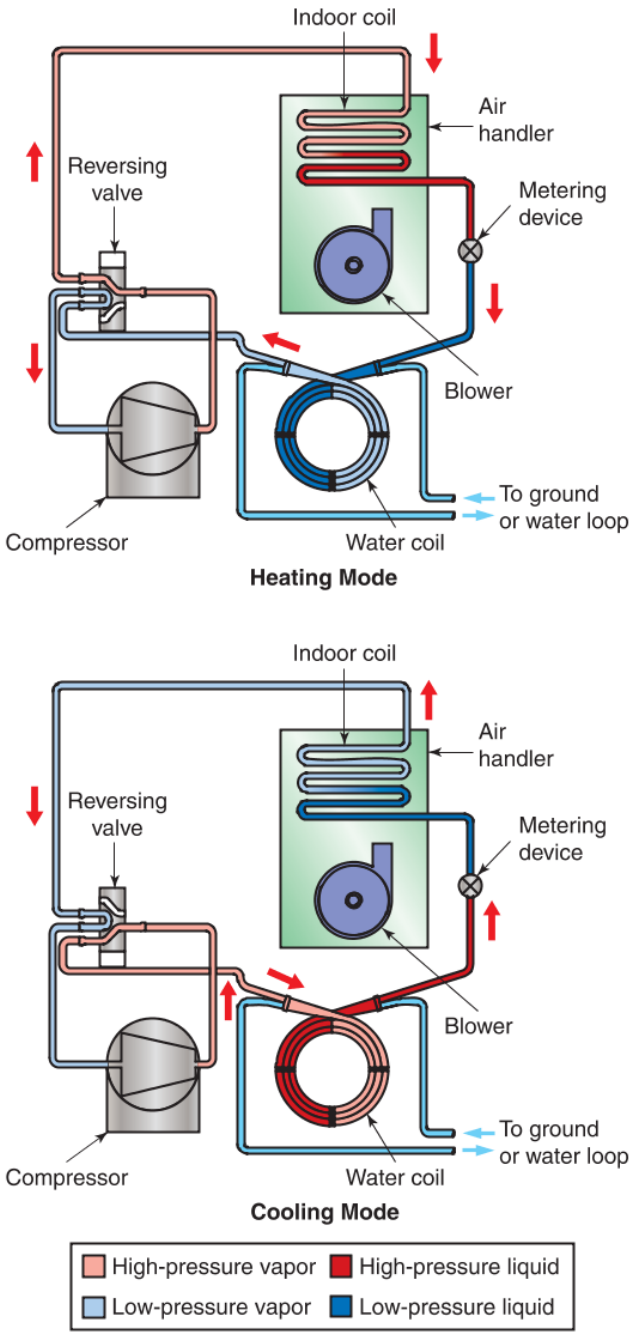

Goodheart-Willcox Publisher

Figure 40-7. Water-source heat pump systems use water circulating through a ground or water loop to exchange heat with the system's refrigerant.

The price of operating ground-source heat pumps is very cost-effective compared to electric heating systems and standard gas furnaces in milder climates. They are also cost-effective compared to air-source heat pumps. This is because an air-source heat pump's

Copyright Goodheart-Willcox Co., Inc.

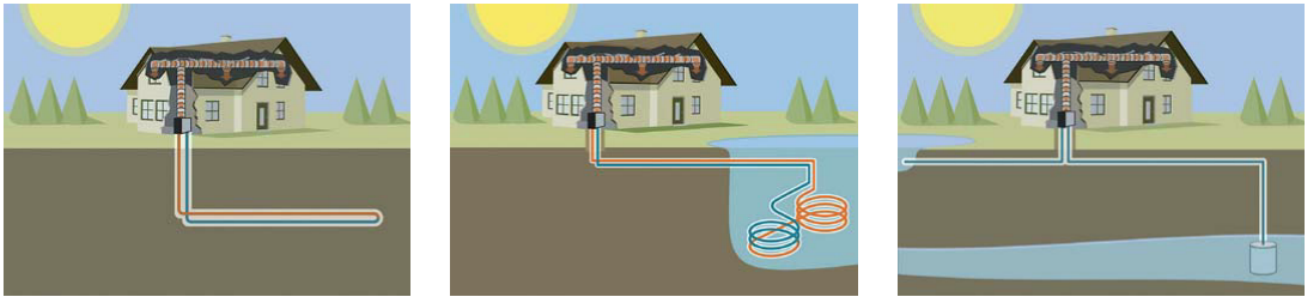

Closed-Loop Heat Pump Systems

Open-Loop Heat Pump Systems

ClimateMaster

Figure 40-8. Closed-loop heat pump systems continuously circulate the same refrigerant or water. Open-loop heat pump systems use water to absorb or release heat and then return that water back to the earth.

Energy Star Qualifying Specifications					
Type of Heat Pump		SEER	EER	HSPF	COP
Air-Source Heat Pumps	Split	14.5	12	8.2	
	Packaged	14	11	8	
Ground-Source Heat Pumps	Closed loop (water-to-air)		17.1		3.6
	Closed loop (water-to-water)		16.1		3.1
	Open loop (water-to-air)		21.1		4.1
	Open loop (water-to-water)		20.1		3.5
	Direct expansion		16		3.6

Goodheart-Willcox Publisher

Figure 40-9. Energy efficiency guidelines for heat pumps to qualify for the Energy Star label.

heating cycle becomes less efficient as the outdoor temperature drops. With a lower outdoor temperature, there is less heat available to transfer, which means more energy is used by an air-source heat pump to produce a given amount of heat than would be used by a ground-source heat pump.

Refrigerants evaporate in a heat pump's outdoor coil at a given temperature and pressure. As the outdoor temperature drops, the temperature difference between the air and the refrigerant in the outdoor coil decreases, making it more difficult for the refrigerant to absorb heat from the air. In colder climates, when outdoor air temperatures drop below the evaporation point of the refrigerant, an air-source heat pump cannot be used for heating. Most manufacturers provide a low-temperature value at which an air-source heat pump should not be used for heating.

40.4 Heat Pump System Components

Heat pumps have many of the same components as traditional compression refrigeration systems. However, a heat pump is unique in that it provides both heating and cooling. The principal parts of a heat pump system include a compressor, an accumulator, an outdoor coil, an indoor coil, a reversing valve, one or more metering devices, and one or more fans, **Figure 40-10**.

40.4.1 Accumulators

A heat pump system requires more refrigerant in cooling mode than in heating mode, which means excess refrigerant must be stored somewhere during heating. Due to liquid receiver designs and a heat pump's ability to reverse the direction of refrigerant flow, a liquid receiver placed in the liquid line is not a good way to store extra refrigerant.

The best way to store extra refrigerant in a heat pump system is to install an accumulator in the suction line between the reversing valve and the compressor. In this section of tubing, refrigerant flow does not change direction, as it does in much of the rest of the system. Installing an accumulator in this location

Copyright Goodheart-Willcox Co., Inc.

allows it to store extra refrigerant when the refrigerant is not needed and helps to protect the compressor from liquid slugging during the heating mode, **Figure 40-11**.

Some heat pumps use another refrigerant storage device called a charge compensator tank. Like an accumulator, a charge compensator tank is used during the heating mode to store extra liquid refrigerant. A ***charge compensator tank*** is a canister with the heat pump's gas line running through it. However, the gas line only passes through the tank. It does not open inside it. The smaller liquid line is connected to the tank and fills it with liquid refrigerant. During the heating mode, the gas line is colder than the liquid line, causing the warmer refrigerant from the liquid line to condense and flow into the charge compensator tank for storage. During the cooling mode, the gas line is warmer than the liquid line, which causes the liquid refrigerant in the tank to boil and circulate through the system as needed.

Pro Tip

Accumulator Orifices

Heat pumps cannot use the same accumulators as other refrigeration systems. An accumulator used in a heat pump system must have smaller orifices to throttle liquid refrigerant going to the compressor. This is especially important during the winter when colder outdoor temperatures may increase the amount of liquid refrigerant in the accumulator.

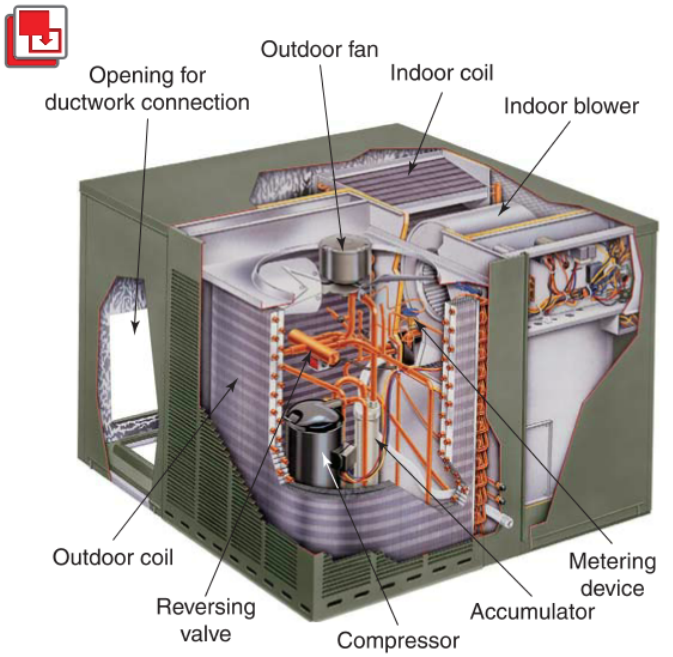

Rheem Manufacturing Company

Figure 40-10. Cutaway of a packaged heat pump system showing the system's principal components.

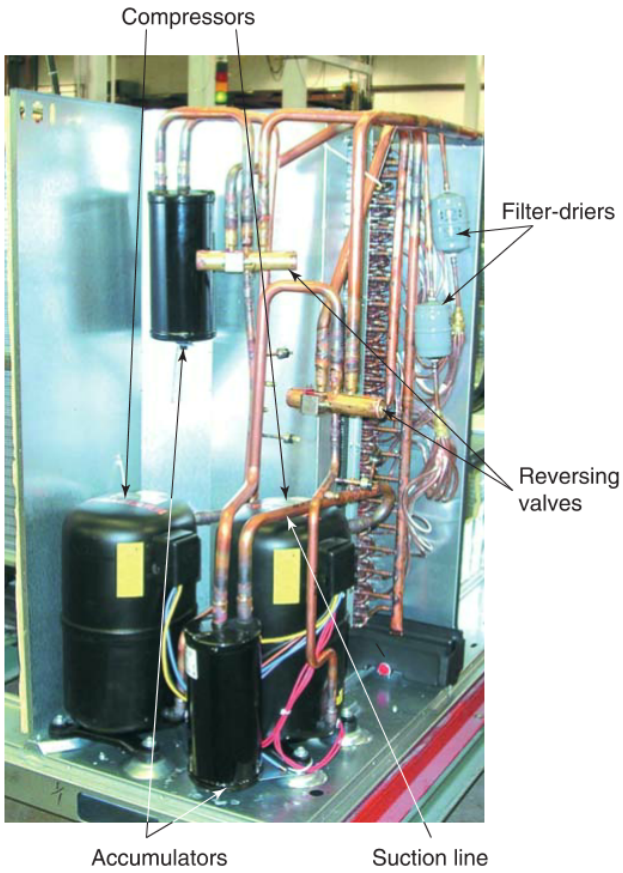

York International Corp.

Figure 40-11. A commercial heat pump system equipped with two compressors and two accumulators. Note how each accumulator is placed in the suction line between the reversing valve and the compressor.

40.4.2 Compressors

Heat pump compressors are similar to compressors in standard air-conditioning units. However, heat pump compressors differ in that they are required to operate at lower ambient temperatures than most air-conditioning compressors. While air-conditioning compressors operate only during warm months, heat pump compressors must operate during both warm and cold seasons.

A heat pump compressor must be designed to handle some liquid slugging without damage. This is done by using slow start-up routines, stronger valves, and other internal component design features. In addition, suction line accumulators and two-way filter-driers are used in heat pump systems to protect the compressor from liquid slugging and contamination. Crankcase heaters also help protect a compressor from any refrigerant that may have migrated to the cold compressor dome and condensed into a liquid during the Off cycle. **Figure 40-12** shows a typical crankcase heater.

Copyright Goodheart-Willcox Co., Inc.

York International Corp.

Figure 40-12. A crankcase heater strapped to the exterior of a compressor dome.

A crankcase heater is an electric resistance heater that warms the compressor dome prior to compressor start-up. This vaporizes any liquid refrigerant that may have entered the compressor during the Off cycle. A crankcase heater also warms up the compressor oil for adequate circulation during low-temperature operation. Crankcase heaters may be designed to fit inside the compressor or to be added to the exterior of the compressor if the unit is used in a cold ambient area.

A heat pump's load not only varies throughout the seasons, but it can also vary throughout a single day. As a result, variable speed compressors are being used with increased frequency to improve a heat pump system's efficiency. Heat pump compressors may be single speed, variable speed, or variable capacity. Single-speed compressors are typically used in residential applications as they are lower in cost than two-speed or variable speed compressors.

For normal heating or cooling loads, a two-speed compressor operates at low speed. When outdoor temperatures are extremely hot or extremely cold, a two-speed compressor operates at high speed for maximum cooling or heating. At high speeds, a two-speed compressor motor operates as a two-pole motor. At low speeds, it operates as a four-pole motor.

Some two-speed reciprocating compressors rotate their motor shaft in one direction for low capacity and rotate in the opposite direction for high capacity. Rotation in one direction engages all of the pistons, while rotation in the other direction engages only some of the pistons.

Variable speed compressors require a separate proportional controller, such as a variable frequency drive (VFD) to produce proper electrical signals to control compressor speed. Variable speed compressors achieve a higher seasonal energy efficiency rating (SEER) than their single-speed counterparts, as they can operate at the proper speed to match system capacity.

Commercial systems sometimes use compressors with a modulating internal unloader to vary capacity. These reciprocating compressors change capacity by operating valves. The valves unload one or more compressor cylinders into clearance pockets.

Outdoor and indoor coil fans may be operated by variable speed motors. This allows the system to match fan speed with the changing system capacities available through the use of two-speed or variable-speed compressors and other methods of variable capacity.

Heat pump compressors with a capacity from 1/3 ton to 1 ton use single-phase motors, often with a start capacitor. If they have dual-voltage settings, these single-phase motors should be operated at 240 V when possible. Using the higher of the two voltage settings permits the use of smaller wires, which cost less than larger wires. Three-phase motors are used in units with a capacity over 1 ton, mainly to improve their electrical performance.

Compressor motors in hermetic systems are usually well insulated to protect from line current voltage fluctuations. Temperature protectors are built into the motor windings and open during compressor overheating extremes.

40.4.3 Metering Devices

In order to circulate refrigerant in either direction, a heat pump must use two metering devices. Each metering device is placed close to the heat exchanger coil into which it meters low-pressure refrigerant. The most commonly used metering devices in heat pumps are thermostatic expansion valves (TXVs). One TXV is mounted at the inlet of the outdoor coil, and the other is mounted at the inlet of the indoor coil. Fixed-orifice metering devices and capillary tubes are also used in heat pumps. Some systems use a capillary tube for one mode of operation and a TXV for the other mode. Metering devices differ with system applications.

Fixed-Orifice Metering Devices and Capillary Tubes

Fixed-orifice metering devices and capillary tubes are not well suited for the changing conditions found

Copyright Goodheart-Willcox Co., Inc.

in most heat pump applications. Because they cannot meter refrigerant flow based on evaporator outlet temperature (as does a TXV), these metering devices must be sized for a specific amount of refrigerant flow. One size fixed-orifice metering device or capillary tube is used for the indoor coil, and a different size is used for the outdoor coil. These types of metering devices may be used in low-volume systems that are designed for a specific outdoor temperature range, but in general, most heat pump systems use metering devices that can produce a variable rate of refrigerant flow.

Thermostatic Expansion Valves

Standard TXVs allow refrigerant to flow in only one direction. This is a problem in heat pump systems, where refrigerant must be able to flow in either direction. Even if two TXVs are used facing opposite directions, one will always block refrigerant flow. One solution to allow proper refrigerant flow is to install a check valve in tubing that runs parallel with each TXV. This arrangement allows refrigerant to circulate through the proper TXV for a given mode of operation. When a TXV is not used for a given mode of operation, refrigerant flows through a check valve to bypass that TXV, **Figure 40-13**.

Each TXV is sized for the coil that it feeds. Heat pump TXVs usually have a cross-charged sensing bulb to accurately control the amount of refrigerant delivered to each coil across the heat pump's range of operating temperatures and pressures. For this reason, TXVs designed specifically for use in heat pumps may not be used in conventional air-conditioning systems.

A second solution to reversing refrigerant flow in a heat pump system equipped with TXVs is to use ***biflow thermostatic expansion valves***. These TXVs allow refrigerant flow in either direction. This eliminates the need for bypass lines and check valves around a TXV not in use for one of the modes of operation. However, there are two different types of biflow TXVs: biflow bypass TXV and biflow metering TXV.

A ***biflow bypass TXV*** has a built-in bypass passage regulated by a check valve. When refrigerant circulates

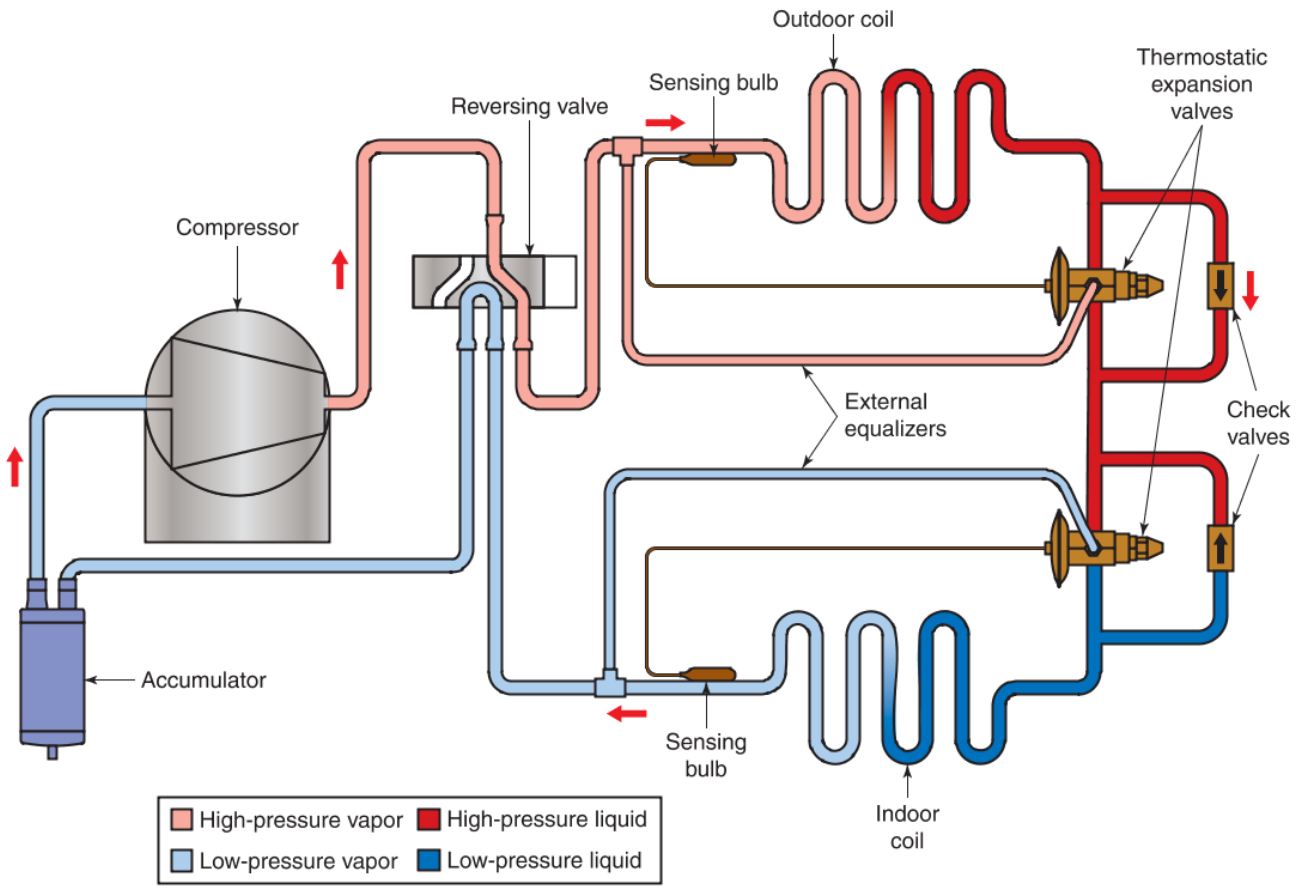

Goodheart-Willcox Publisher

Figure 40-13. If a heat pump system uses thermostatic expansion valves, a check valve in parallel with each TXV provides a path for refrigerant to flow in either direction.

Copyright Goodheart-Willcox Co., Inc.

in the opposite direction of a given TXV's normal flow, the refrigerant is bypassed through a check valve within the biflow bypass TXV. When using these TXVs, a heat pump requires two of these metering devices; however, it does not require external bypass lines with check valves. In this way, less labor and fewer parts are required, **Figure 40-14**.

A ***biflow metering TXV*** meters refrigerant flow in either direction. Whether the heat pump is in heating mode or cooling mode, this one TXV is metering the refrigerant. Biflow metering TXVs require special installation considerations and can only be used in certain systems. Typically, these are used in systems in which the two heat exchanger refrigerant coils are physically located close to each other. Examples of these include packaged air-source heat pumps or some water-source heat pumps.

The sensing bulb of a biflow metering TXV is mounted on the refrigerant line between the reversing valve and the compressor inlet. This setup allows the sensing bulb to always monitor superheat without regard to the system operating in heating or cooling mode. Its external equalizer line must be connected to this same refrigerant line. Since a biflow metering TXV meters refrigerant in either direction of flow, it eliminates the need for two metering devices and any parallel tubing and check valves normally required for a system with conventional TXVs. See **Figure 40-15**.

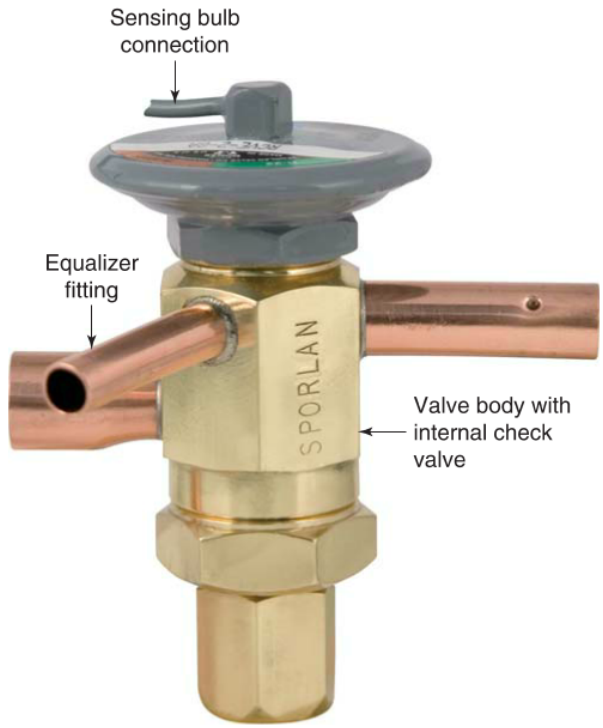

Courtesy of Sporlan Division - Parker Hannifin Corporation

Figure 40-14. A biflow bypass TXV appears similar to a conventional TXV, but it has an internal check valve that allows refrigerant to flow in either direction through the valve body. Refrigerant is metered in one direction and bypassed in the other direction.

In conventional air-conditioning systems, TXV sensing bulbs are only exposed to the cool temperatures in the suction line, but in a heat pump system, TXV sensing bulbs are exposed to much higher temperatures. For instance, when a heat pump is in cooling mode, hot compressor discharge gas flows through the gas line to which the idle TXV sensing bulb for the heating mode is attached. During the heat pump's heating mode, the TXV sensing bulb for the cooling mode is exposed to the compressor's high-temperature discharge gas in the gas line. These high temperatures may cause the pressure in the sensing bulb to increase enough to burst the bulb or the diaphragm or bellows to which it is attached.

To avoid this problem, heat pumps require TXVs to have a maximum operating pressure (MOP) compatible with the system's coils and compressor. These TXVs have a reduced vapor charge that can exert only a limited amount of pressure to control the TXV. Even when hot discharge gas increases the sensing bulb's temperature, the heat will not increase the pressure enough to burst the sensing bulb or its attached element in the TXV.

Flow Check Pistons

Instead of using TXVs or fixed metering devices, some heat pumps use flow check pistons. A ***flow check piston*** meters refrigerant passing through it in one direction and moves its piston to allow refrigerant to pass freely in the other direction. When refrigerant flows in one direction, the flow check piston meters it to low pressure. When refrigerant flows in the other direction, the flow check piston allows it to pass without a pressure drop. A flow check piston consists of a valve assembly and a piston with a hole in its center, **Figure 40-16**.

When a heat pump coil is acting as a condenser, liquid refrigerant flowing out of the coil is metered through a hole in the center of the piston and then passes into a distributor. With the refrigerant flowing in this direction, the flow check piston provides an even distribution of metered refrigerant into the coil acting as an evaporator. If the flow is reversed, the piston moves back, which permits a free flow of refrigerant without metering.

Depending on the system application, flow check pistons can be used for both cooling and heating modes or for just one mode in conjunction with another

Copyright Goodheart-Willcox Co., Inc.

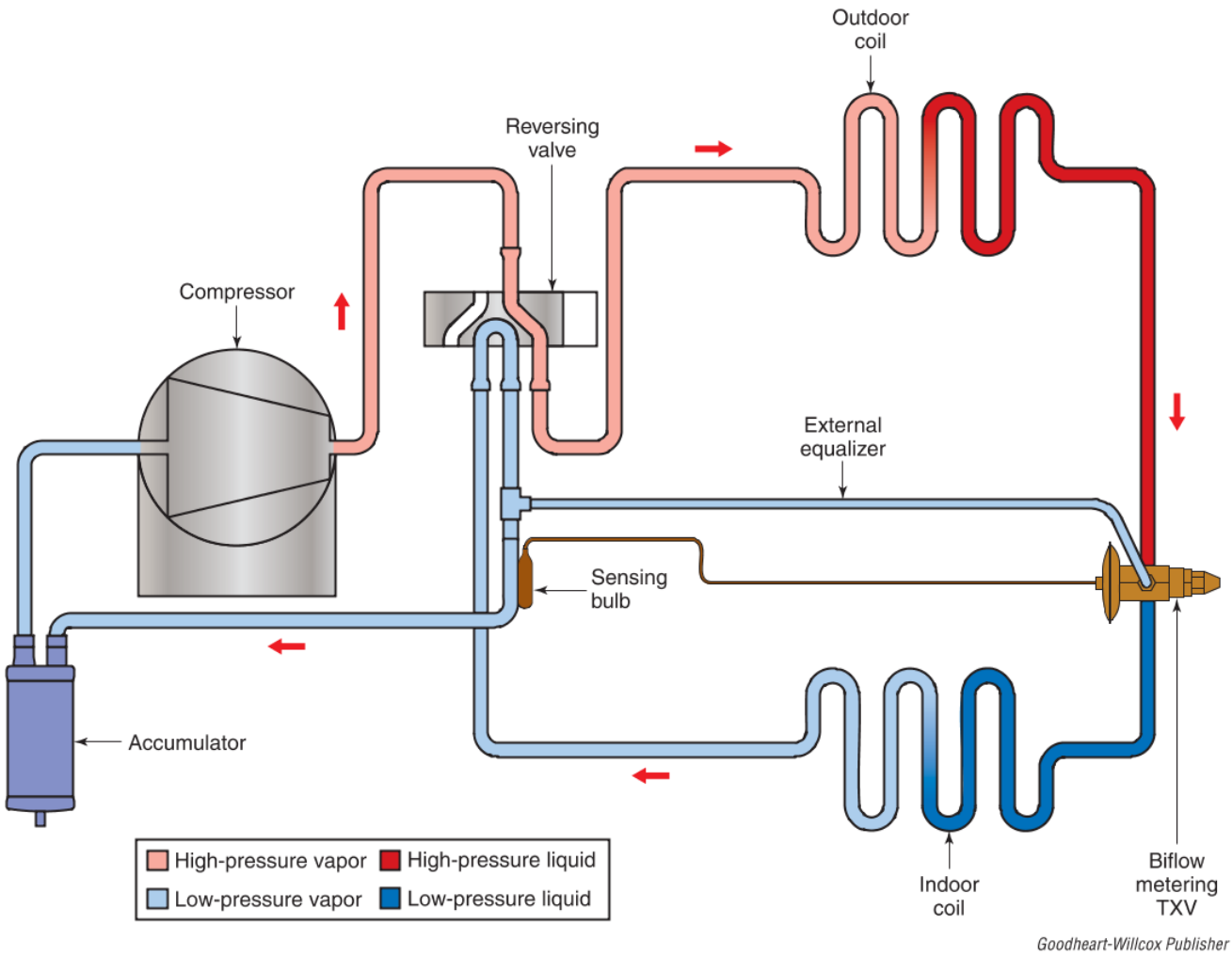

Figure 40-15. A biflow metering TXV eliminates the need for two metering valves in a heat pump.

metering device for the other mode. In some installations, two flow check pistons are used as metering devices between the indoor and outdoor coils. While one flow check piston acts as a metering device, the other opens to allow refrigerant to pass freely. When changing from one mode to the other, the flow check pistons switch functions.

40.4.4 Reversing Valves

A ***reversing valve*** is a four-way manifold controlled by a solenoid valve that can reverse the flow of refrigerant through a circuit, **Figure 40-17**. Inside a reversing valve is a movable section of tubing mounted on a piston. One position directs refrigerant flow for cooling mode, and the other position directs refrigerant flow for heating mode. A reversing valve allows a heat pump system to change from cooling to heating. For cooling, the reversing valve routes refrigerant from the indoor coil to the compressor and then to the outdoor coil. For heating, the reversing valve routes refrigerant from the outdoor coil to the compressor and then to the indoor coil.

Reversing Valve Connections

The four tubing stubs on a reversing valve connect to the suction line (compressor inlet), the discharge line (compressor outlet), the indoor coil, and the outdoor coil. The four tubing stubs are arranged so that a reversing valve has one side with only one stub, while the other side has three. The tubing stub on the side by itself always connects to the compressor discharge line. On the side with three tubing stubs, the middle stub always connects to the suction line. The suction line typically leads to an accumulator before going to the compressor inlet. Each of the two outer tubing stubs connects to either the indoor coil or the outdoor coil.

Copyright Goodheart-Willcox Co., Inc.

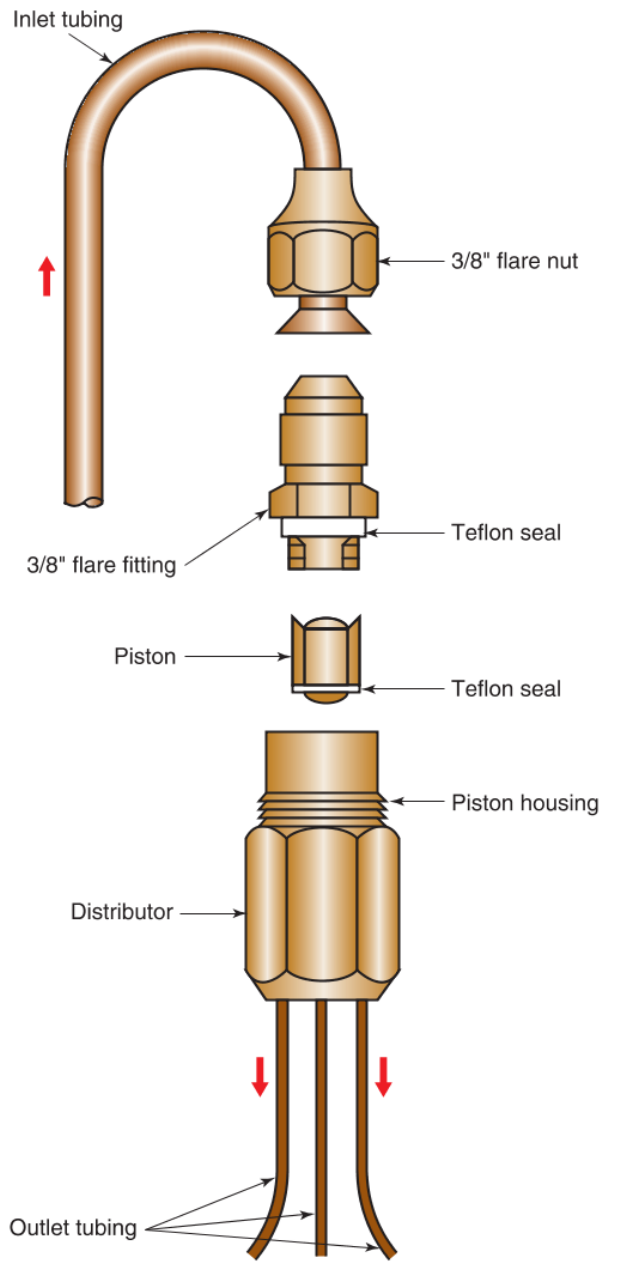

Rheem Manufacturing Company

Figure 40-16. Refrigerant flows through a flow check piston where it is metered to a lower pressure and then distributed to either the indoor or outdoor coil.

The connections to the two outer tubing stubs of a reversing valve are determined by the solenoid positions. Most heat pump systems are designed so that the heat pump is in heating mode when the solenoid is de-energized. This means that the de-energized solenoid position routes the outdoor coil to the suction line and the discharge line to the indoor coil. This provides a fail-safe that allows a heat pump system to continue

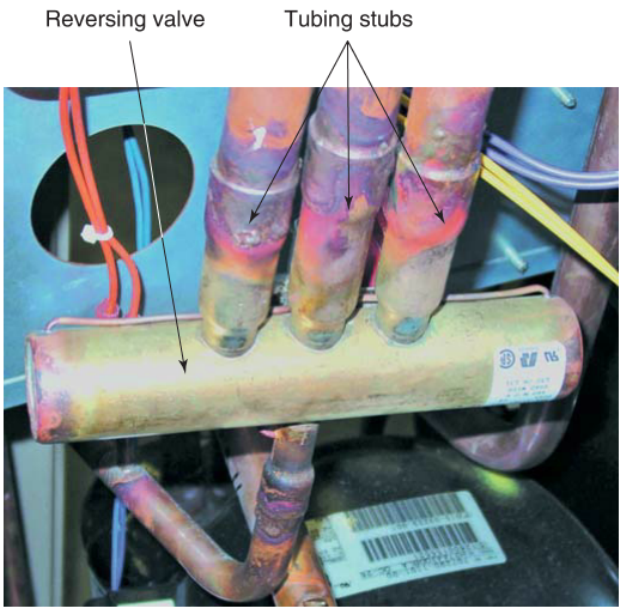

York International Corp.

Figure 40-17. A heat pump's reversing valve controls the direction of refrigerant flow through the indoor and outdoor coils.

to provide heating even if the reversing valve's solenoid burns out and remains in the de-energized position. This arrangement may be referred to as *failing into heating mode*.

However, this is not always the case, especially in warmer climates where heat pumps are used to provide cooling more frequently. In these systems, the solenoid's de-energized position corresponds to the cooling mode, which means the connections to the reversing valve's two outer tubing stubs are switched, **Figure 40-18**.

Types of Reversing Valves

There are two types of reversing valves used in heat pumps: direct acting and pilot operated. Smaller heat pumps require less force to move the piston and sliding section of tubing inside a reversing valve. These heat pumps use a ***direct-acting reversing valve***, which uses the direct mechanical action of the solenoid plunger to move the piston and sliding section of tubing inside the reversing valve. This type of reversing valve does not require a pilot solenoid valve.

Larger heat pumps require more force to move the piston and sliding section of tubing in the reversing valve. A ***pilot-operated reversing valve*** uses a solenoid valve to act as a pilot valve to harness the pressure difference between the compressor's suction and discharge lines. This type of reversing valve has capillary tubes from the suction and discharge lines running to the solenoid pilot valve, **Figure 40-19**.

Copyright Goodheart-Willcox Co., Inc.

The capillary tubes provide passageways for high-pressure discharge vapor from the compressor to push against the piston inside the reversing valve, moving it to one side or the other. A signal from a thermostat to the solenoid pilot valve causes the valve to change

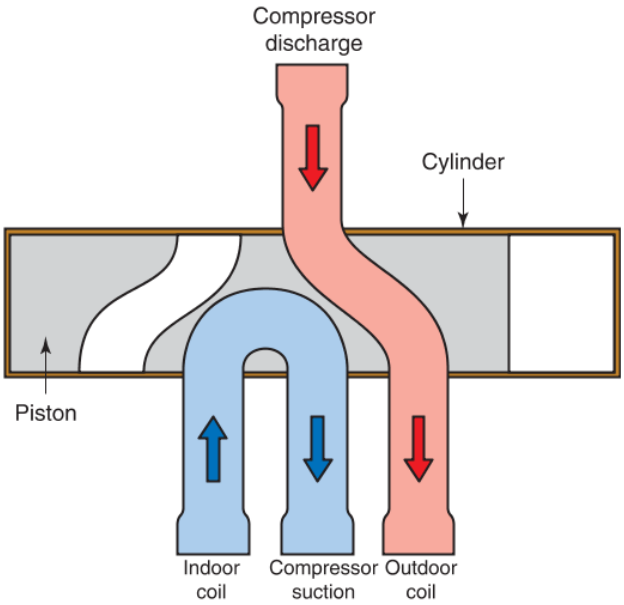

De-energized Position Provides Cooling

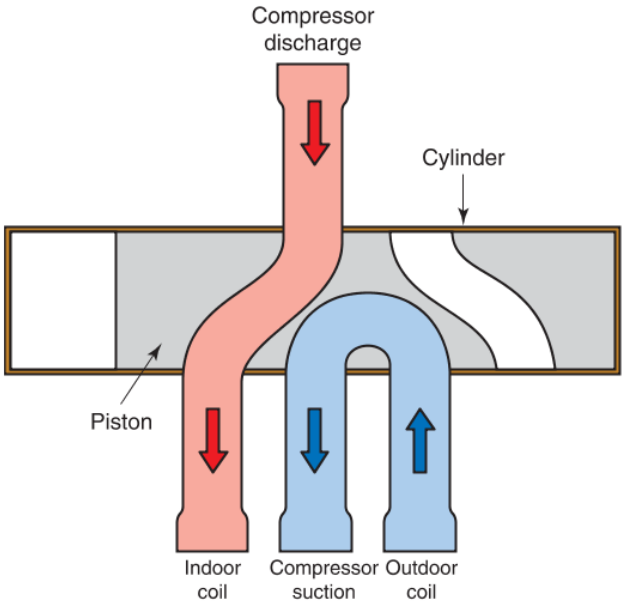

De-energized Position Provides Heating

Goodheart-Willcox Publisher

Figure 40-18. Even when a reversing valve's solenoid is inoperable or burnt out, the valve's de-energized position allows a heat pump system to provide fail-safe cooling or heating, depending on how the tubing is connected.

York International Corp.

Figure 40-19. A pilot-operated reversing valve has a solenoid pilot valve with capillary tubes connecting the pilot valve, suction line, and discharge line to opposite ends of the reversing valve.

how the capillary tubes are connected to the suction and discharge lines. This enables the piston and sliding section of tubing to move to the cooling or heating mode position, **Figure 40-20**. Pilot-operated reversing valves are most commonly used in residential and commercial heat pump systems that operate with higher pressure refrigerants, such as R-410A.

40.4.5 Coils and Loops

Heat pumps have multiple heat exchangers. These heat exchangers circulate either refrigerant or a water solution through the heat pump system as it absorbs and releases heat. The amount of heat pump equipment that is located outdoors varies depending on the type of system. Air-source heat pumps have more equipment outdoors than ground-source heat pumps. An air-source heat pump has an outdoor unit that contains an outdoor coil, fan, compressor, metering device, and various controls. In a ground-source or water-source heat pump system, the compressor, metering device, and controls are usually located indoors in a cabinet unit that may look like some other appliance, **Figure 40-21**.

Copyright Goodheart-Willcox Co., Inc.

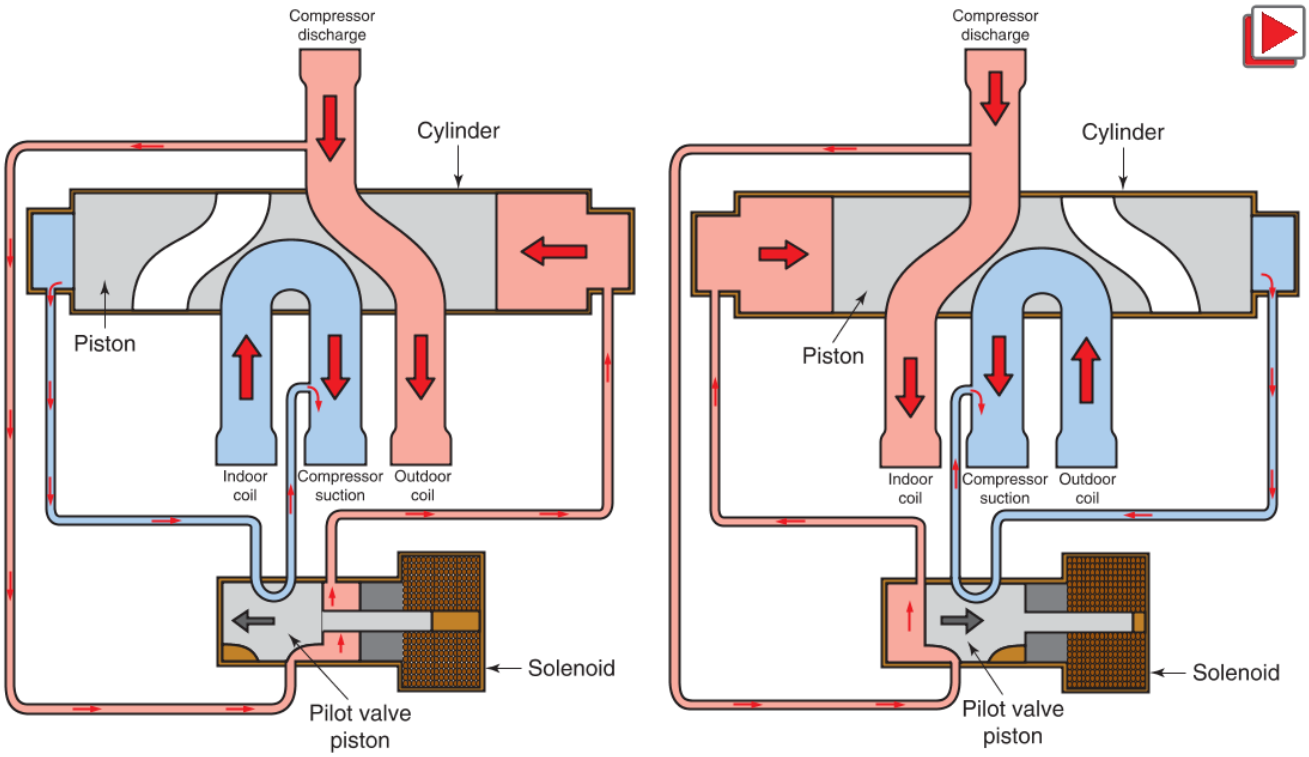

Goodheart-Willcox Publisher

Figure 40-20. A solenoid pilot valve directs high-pressure vapor from the discharge line to one end of a reversing valve's piston and low-pressure vapor from the suction line to the other end of the piston. When the solenoid is energized, the pilot valve alters the path of vapor flow through the capillary tubes, causing the high-pressure vapor from the discharge line to move the reversing valve piston to the other side.

ClimateMaster

Figure 40-21. A water-to-water heat pump with service panel closed can resemble just another appliance, but it contains the components and controls designed to regulate indoor climate.

Direct-exchange heat pumps have outdoor coils filled with refrigerant that are buried underground. In contrast, water-source heat pumps have ground or water loops that are either buried underground or submerged in a body of water. The types of coils and loops in ground-source heat pumps can be divided into the following classifications:

- Air coil.
- Water coil.
- Ground coil.
- Water loop.
- Ground loop.

Pro Tip

Coils versus Loops

In the HVACR industry, parts and components often have multiple names. In the heat pump sections of this text, the term *coil* generally refers to tubing carrying refrigerant. The term *loop* generally refers to tubing or piping carrying a water-based solution.

Copyright Goodheart-Willcox Co., Inc.

Coils and loops are named for the substances that contact the exterior of the tubing. Be mindful of the following terms and their uses as you study heat pumps:

- An *air coil* contacts air and circulates refrigerant.
- A *water coil* contacts water and circulates refrigerant.
- A *ground coil* contacts the ground and circulates refrigerant.
- A *ground loop* contacts the ground and circulates water.
- A *water loop* contacts water and circulates separate, isolated water.

Air Coils

An ***air coil*** circulates refrigerant and absorbs heat from or releases heat to the air. In air-to-air heat pump systems, the indoor and outdoor coils are air coils. Both coils usually have fins bonded to the tubing to increase their surface area and ability to transfer heat. The indoor air coil is normally located in a furnace or air handler. A blower circulates the air being distributed to the conditioned space across the coil, **Figure 40-22**.

The outdoor air coil exchanges heat with the outdoor air and is usually housed in what looks like a condensing unit for a split air-conditioning system. A fan moves air across the outdoor coil to further increase heat transfer. Like a condensing unit, a heat pump's outdoor unit may be mounted on the outside wall of a building, on a roof, or any convenient place that does not restrict airflow, **Figure 40-23**.

Ground Coils

A ***ground coil*** is an underground length of tubing through which refrigerant is circulated in a ground-source heat pump system. It functions as the outdoor coil for a direct-exchange heat pump. This type of ground-source heat pump is called a direct-exchange heat pump because heat is directly exchanged between the earth and the coil of refrigerant, **Figure 40-24**.

Ground coils are made of copper. They are sized by the heat pump manufacturer to match the indoor coil capacity and must be purged and pressure tested before being charged with refrigerant. Compared to water-source heat pumps, which require a secondary loop filled with water to transfer heat to the refrigerant, direct-exchange heat pumps are more efficient because they transfer the earth's heat directly to the refrigerant through the ground coil. However, ground coils must be installed by a certified HVACR technician or licensed contractor. Any leak in a ground coil can be difficult to repair because the coil is buried underground.

ClimateMaster

Figure 40-22. An indoor air coil exchanges heat with the air being distributed throughout the conditioned space, which is circulated by a blower.

Tempstar

Figure 40-23. A heat pump's outdoor air coil is very similar in design, appearance, and function to the condensing unit in a split air-conditioning system.

Copyright Goodheart-Willcox Co., Inc.

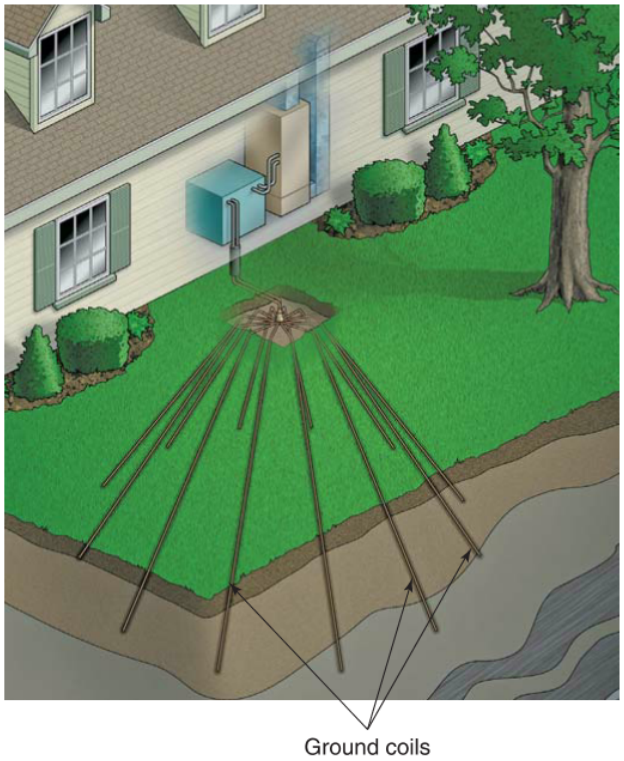

EarthLinked Technologies, Inc.

Figure 40-24. Direct-exchange heat pump system with copper ground coils arranged in a diagonal configuration.

Water Coils

Water-source heat pumps circulate water or water-based solutions in ground loops buried underground or in water loops submerged underwater. Before heat to and from a conditioned space is transferred to a ground or water loop, it must be transferred through a water coil. A ***water coil*** is a heat exchanger where heat is transferred between the refrigerant from the indoor coil and water from the ground or water loop, **Figure 40-25**.

Water coils are often installed inside a building near the indoor coil and heat distribution equipment. In a water coil, refrigerant is pumped through one pathway and water (or a water-based solution) is pumped through an adjacent pathway. The refrigerant circulating through the water coil is the same refrigerant circulating through the indoor coil, and the water circulating through the water coil is the same water that is circulating through the water loop or ground loop. Each pathway is physically isolated, so that the refrigerant and water do not come into contact with each other or mix. Rather, they just exchange heat between each other.

Water Loops

Since bodies of water can maintain fairly steady, moderate temperatures in both warm and cool climates, they make good heat sources and heat sinks. A ***water loop*** is a length of tubing running to and from a water coil and is submerged in a body of water, where it absorbs or expels heat. The tubing is made of polyethylene, formed into loops, and submerged underwater, **Figure 40-26**.

Water loops are used in closed-loop heat pump systems. Water (or a water-based solution) is circulated

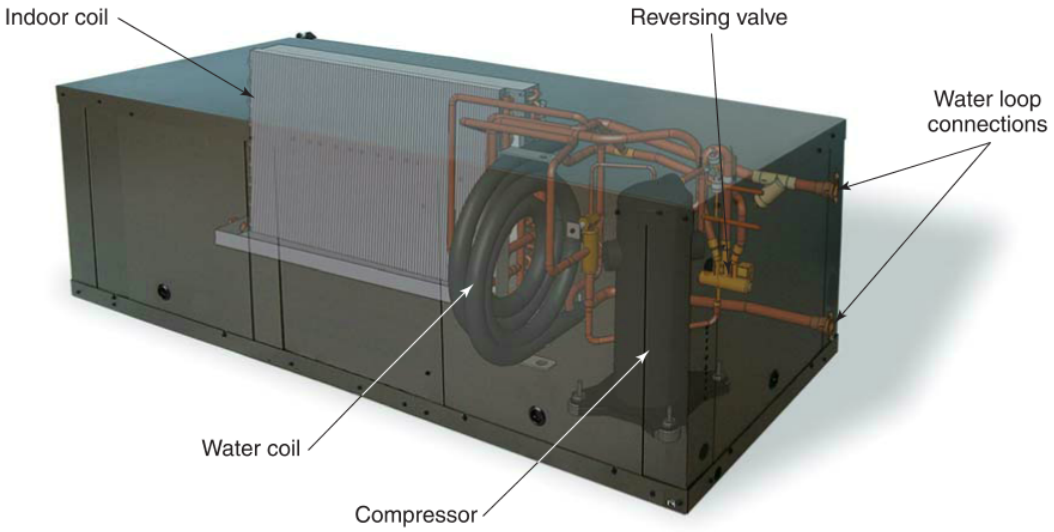

Daikin Applied

Figure 40-25. Refrigerant from the indoor coil and water from the water loop exchange heat in a tube-within-a-tube style water coil in this ground-source heat pump.

Copyright Goodheart-Willcox Co., Inc.

Corken Steel Products

Figure 40-26. Water loops made of polyethylene tubing ready to be submerged underwater.

through water loops by water pumps, transferring heat to the refrigerant in a water coil. The water does not mix with the refrigerant in the water coil unless a leak has developed. The water in the loop does not mix with the body of water in which the tubing is submerged. The water loop is closed to isolate the water in the loop from the body of water.

Water-based solutions can be made by adding salt, glycol, or alcohol to the water in proper proportions. Some commonly used salts, glycols, and alcohols include the following:

Salts:

- Calcium chloride.
- Sodium chloride.

Glycols:

- Propylene glycol.
- Ethylene glycol.

Alcohols:

- Methyl alcohol.
- Ethyl alcohol.
- Isopropyl alcohol.

Water loops are submerged at least six feet deep in ponds or lakes to avoid any fluctuations in water temperature that occur closer to the surface. The loops should be located about one foot above the bottom of the pond or lake to keep them from being immersed in silt buildup.

Ground Loops

At a depth of four to six feet, the temperature of the earth only fluctuates slightly. This makes the ground at that depth a good heat source and heat sink. A ***ground loop*** is a length of tubing running to and from a water coil and is buried underground, where its circulating water (or water-based solution) absorbs or expels heat. The water in a ground loop transfers heat between the heat pump's water coil and the ground. The tubing for a ground loop is usually made from plastic, such as polyethylene or polybutylene, **Figure 40-27**.

Thinking Green

EIA for Heat Pumps

Water loop heat pumps absorb or reject heat into a lake, stream, or pond. Local and state municipalities may require an ***Environmental Impact Assessment (EIA)*** prior to installation. An EIA can be used to assure that the heat pump system will not affect the quality of the lake, stream, or pond fish life and habitat. Currently there is no consistency in local and state regulations regarding this area, so it is important to determine if an EIA is required prior to installation.

Closed Ground Loops

Ground-source heat pumps that use ground loops may be closed-loop systems or open-loop systems. Closed ground loops have a set charge of water that circulates through the water coil and ground loop. These ground loops are generally buried in one of two different ways: vertically or horizontally. Vertical ground loops may be as deep as 400′ and require less ground surface area than horizontal loops, **Figure 40-28**.

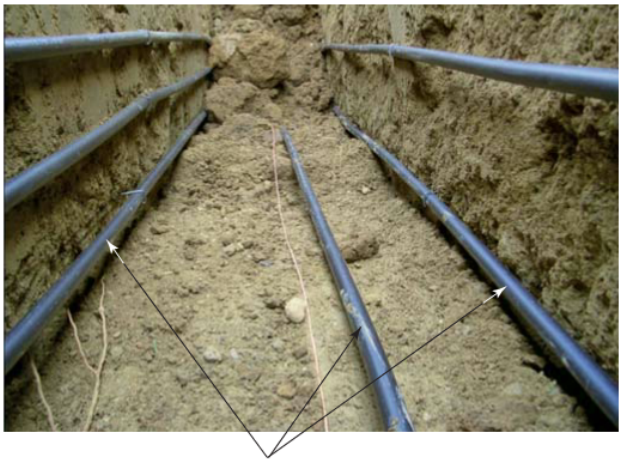

Corken Steel Products

Figure 40-27. Ground loops are buried four to six feet underground where the temperature of the ground stays fairly consistent.

Copyright Goodheart-Willcox Co., Inc.

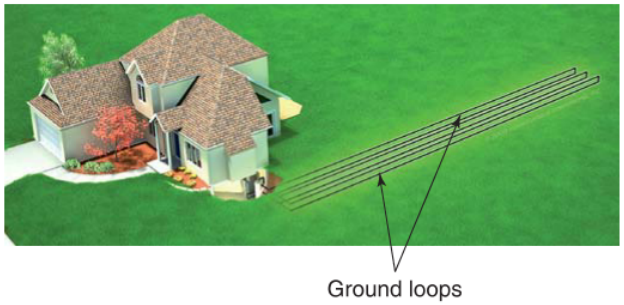

Horizontal Configuration

Vertical Configuration

WaterFurnace International, Inc.

Figure 40-28. Closed ground loops with a horizontal configuration and a vertical configuration.

Vertical and horizontal ground loops can be arranged in series or in parallel. The water in a series loop flows through a single path. Series loops have higher heat transfer, as they have less pressure drop through them. In most cases, fewer tubing connections are required and air pockets are easier to eliminate in series loops than in parallel loops. However, because all of the water is circulated through a single loop, a series loop requires larger sized tubing than a parallel loop, **Figure 40-29**.

A parallel loop provides several different paths for the circulating water to follow underground. Parallel loops can use smaller tubing than series loops for comparable capacity, and less water is needed than in series loops. However, parallel loops pose more difficulty in removing air pockets, may be problematic in balancing pressure among the different branches, and may require more tubing connections.

Open Ground Loops

Open ground loops are used to transfer the water pumped from a lake or well to the water coil and then return the water to either the same body of water or another one. Refer back to **Figure 40-8**. Examples of open ground loops include loops that pump and return water from a well, a river, a pond, or a lake.

Open-loop heat pump systems are considered to have ground loops, not water loops. This is because the heat exchanged with the body of water is ultimately exchanged with the ground that surrounds the body of water. Installation of an open ground loop requires an analysis as to the efficiency of the total system. In addition, ground-source heat pumps either add heat or remove heat from a lake or pond, requiring an environmental impact assessment prior to the installation. Local codes may not allow open ground loops to be installed in certain marine environments.

40.5 Heat Pump Controls

Heat pumps have temperature controls that allow the owner to maximize heat pump usage to achieve periods of high-efficiency heating. During summer cooling, a heat pump system operates just like any other mechanical refrigeration-type of cooling system. During winter heating, however, a heat pump system requires more than just temperature controls to keep the system operating. Defrost controls are needed to monitor ice buildup on the outdoor coil of an air-to-air system, and auxiliary heat is required to provide additional heating during defrost operation or lower than normal temperature conditions.

40.5.1 Temperature Controls

In most heat pump systems, the same compressor is used for both the heating and cooling modes. Its operation is controlled by a heating and cooling thermostat, **Figure 40-30**. These thermostats provide the following functions in a heat pump system:

- Turning the system on and off (temperature set points).
- Selecting cooling or heating mode.
- Selecting fan options.
- Initiating auxiliary heat.

A selector switch on the thermostat allows the owner to switch between heating and cooling modes. If the fan switch is in the *Auto* position, the indoor blower

Copyright Goodheart-Willcox Co., Inc.

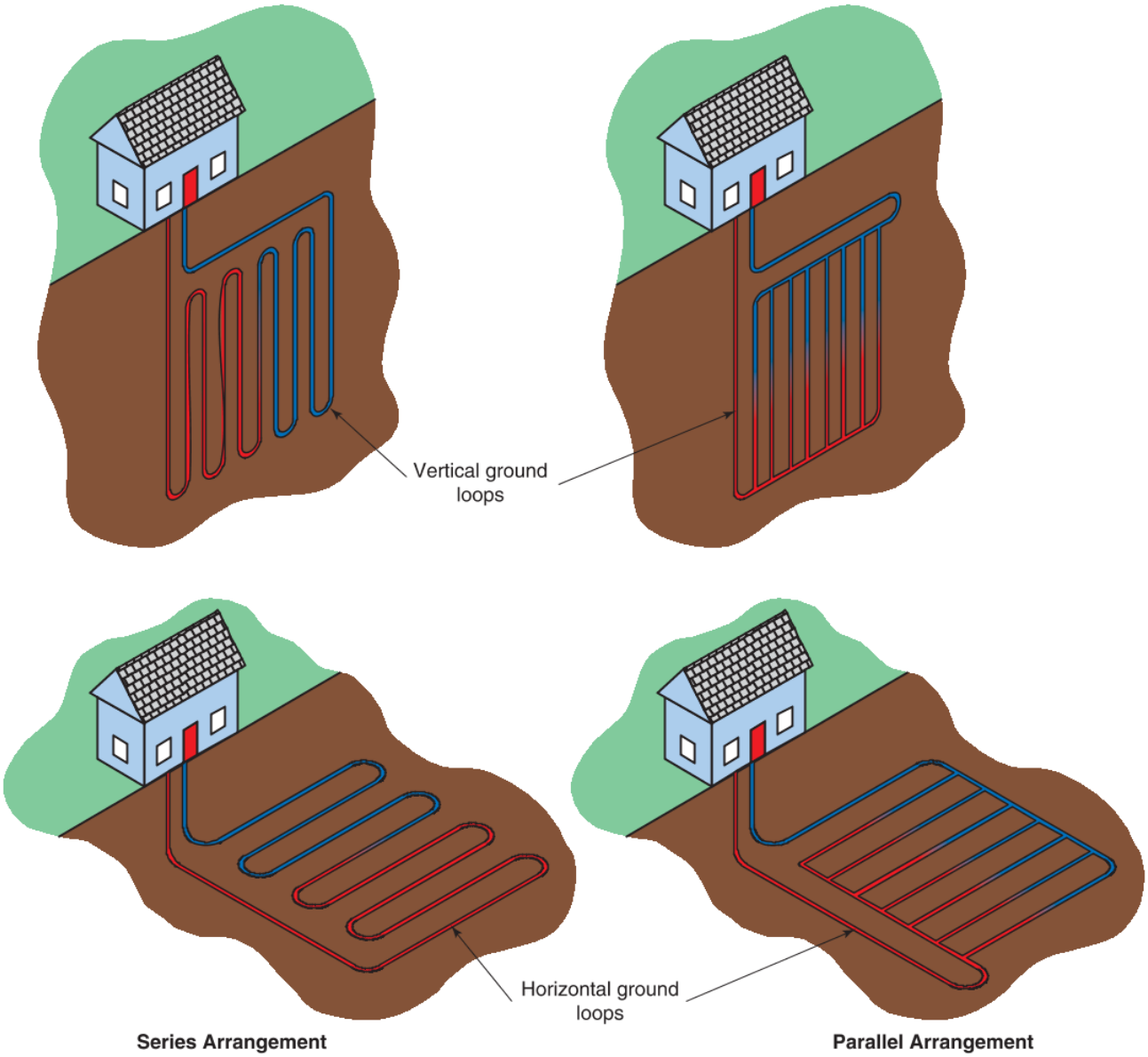

Goodheart-Willcox Publisher

Figure 40-29. In a series arrangement, all of the water flows through a single path. In a parallel arrangement, each path carries only a portion of the total amount of water.

11

will turn on and off with the compressor during both the heating and cooling modes. If the fan switch is in the *On* position, the indoor blower will maintain continuous operation. If the heat pump system is not responding or if auxiliary heat is needed to maintain the desired conditions, the owner can substitute the auxiliary heat for the system by moving the switch on the thermostat to *Emergency Heat*. Some heat pump systems are also equipped with humidistats, which are useful when humidity is an issue.

Pro Tip

Thermostat Compatibility

Not all system thermostats are designed to be compatible with heat pumps. Heat pumps often require extra controls that are not used with standard central heating and cooling systems. When replacing a thermostat or choosing a thermostat for a new heat pump installation, be certain that the thermostat is compatible for your type of heat pump.

Copyright Goodheart-Willcox Co., Inc.

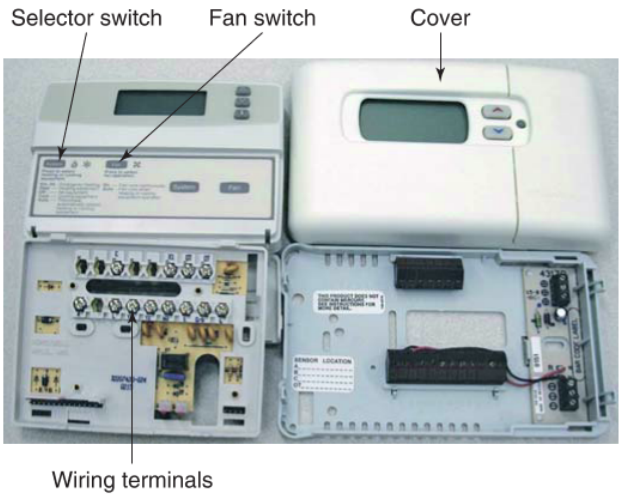

York International Corp.

Figure 40-30. Disassembled thermostat for a heat pump system showing the thermostat's wiring terminals.

When dealing with thermostats, always refer to manufacturer specifications. Since different HVACR systems may offer different control options, thermostat terminals and wiring colors are not consistent among all manufacturers. However, it is helpful to be familiar with some common wiring terminal identification letters and the functions to which the letters correlate. The following is a list of commonly used thermostat terminal letters and their functions:

- Rh—calls for heat.
- Y1—cooling or cooling/heating stage 1.
- Y2—cooling or cooling/heating stage 2.
- W1—heating stage 1 or auxiliary heat.
- W2—heating stage 2 or auxiliary heat.
- H—humidity control.
- DH—dehumidifier control.
- G—fan control.
- E—emergency heat or auxiliary heat.
- O—cooling mode reversing valve.
- B—heating mode reversing valve.
- O/B—reversing valve.
- L—system monitor or service light/alarm.
- C—common (for 24 V circuits).
- GND—ground.
- OS—outdoor air sensor.
- OD—outdoor temperature sensor.
- ID—indoor temperature sensor.
- Aux—auxiliary output.
- DI1—digital input 1.
- DI2—digital input 2.
- RS—remote room-temperature sensor.
- Scom—sensor common.

Caution

Thermostat Wiring by Letter

When replacing a thermostat, be sure to label each wire with the letter of the terminal to which it is connected as you disconnect each wire. Rather than wiring a thermostat by wire color, wire according to each wire terminal's identification letters, **Figure 40-31**.

40.5.2 Defrost Controls

During winter, air-source heat pumps operating in heating mode sometimes develop frost or ice on the outdoor coil. Ice forms because moisture in the outdoor air condenses on the coil and freezes as heat is absorbed by the refrigerant. Ice formation is possible because the refrigerant inside the outdoor coil is significantly lower than 32°F (0°C).

Frost and ice act as heat insulators and block airflow around the coil, inhibiting heat transfer and reducing heat pump efficiency. Therefore, air-source heat pumps are equipped with defrost controls to prevent and remove ice accumulation (buildup). Heat pump defrost controls are typically initiated by time and temperature. This means that they combine the

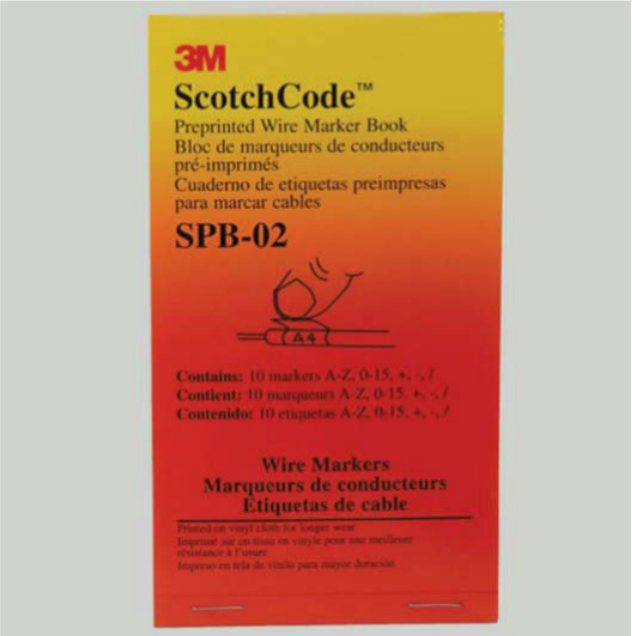

DiversiTech Corporation

Figure 40-31. Use adhesive wire markers to label wires by their terminals when replacing a thermostat.

Copyright Goodheart-Willcox Co., Inc.

actions of a timer, an outdoor temperature sensor, and a coil temperature (defrost) sensor to initiate the defrost cycle, **Figure 40-32**.

Many heat pump systems use a timer to signal when a defrost cycle is required. This prevents the defrost cycle from constantly interrupting the heating cycle while the heat pump is trying to warm the conditioned space. The timer sends a signal to the system controller at set intervals of time (usually every 30, 60, or 90 minutes) telling it to check the temperature sensors for the outdoor coil and outdoor air. The timer's interval can often be adjusted by arranging jumpers on the system's control circuit board, **Figure 40-33**.

Once the timer sends the signal, the system controller compares the temperature readings of the sensors for the outdoor coil and the outdoor air. If these two temperatures remain relatively stable, there is no frost or ice buildup, and the defrost cycle is skipped until the next defrost interval. However, as ice forms and insulates the outdoor coil, the temperature of the coil begins to drop. This temperature drop happens because the ice on the coil prevents the coil from absorbing heat. If the coil temperature drops low enough, usually below 26°F (–3°C), and the outdoor temperature remains the same, the system controller initiates the defrost cycle.

York International Corp.

Figure 40-32. A sensor mounted near the outdoor coil is used to detect the outdoor coil's temperature at timed intervals.

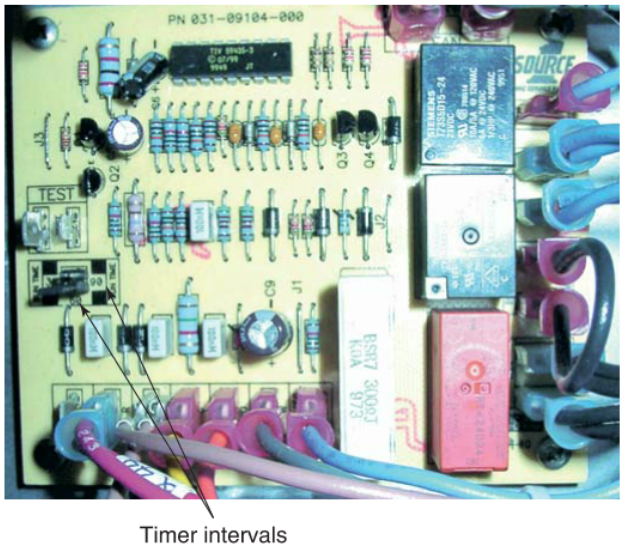

York International Corp.

Figure 40-33. A control circuit board allows a technician to adjust the timer interval for a heat pump's defrost controls.

Some control systems initiate the defrost cycle based on air pressure. A pressure switch is used to measure the air pressure across the outdoor coil. As ice forms on an outdoor coil, the air temperature drops, which creates a pressure drop. The pressure switch reacts to the pressure drop, initiating the defrost cycle. Oftentimes, a pressure switch is used in conjunction with a time- and temperature-initiated control system. In such a system, three conditions must be met before the defrost cycle can start:

- The timer must be at the defrost interval.
- The pressure switch must detect a pressure drop.
- The controller must determine that a temperature difference exists between the outdoor air and the outdoor coil.

Another method of initiating the defrost cycle relies on measuring the current draw of the outdoor coil's fan motor. As the outdoor coil becomes blocked with ice, the airway through the coil becomes smaller and smaller. This makes the fan draw more current to pull air through the smaller airway. The system controller measures the current draw of the fan motor and activates the defrost cycle if the fan begins to draw too much current.

Manufacturers have also designed heat pumps with defrost control systems that only run when performance begins to negatively affect efficiency. Having

Copyright Goodheart-Willcox Co., Inc.

the defrost cycle on only when it is absolutely necessary is called ***demand defrost***. To achieve this ideal and maintain a high level of system efficiency, manufacturers design the defrost control system to measure additional system variables, such as the temperatures of the discharge line, liquid line, and indoor coil. Demand defrost also turns off the defrost cycle as soon as it has served its purpose. This is accomplished by using sensors to measure the temperatures of the outdoor air and outdoor coil or by having a timer that only allows the defrost cycle to operate for a given period of time, usually ten minutes.

Thinking Green

Minimize Coil Defrost Time

When an outdoor coil frosts or ices over, it can no longer transfer heat efficiently. This makes the system ineffective and wastes energy. However, time spent in defrost mode also reduces system efficiency because the system cannot function in heating mode while it is defrosting. Pressure switches and demand defrost help ensure maximum efficiency by preventing the system from defrosting when it is unnecessary and by keeping defrost cycle times to a minimum.

Reverse Cycle Defrost

Air-source heat pumps have two main defrost methods. In one method, called ***reverse cycle defrost***, refrigerant flow through the heat pump is reversed, which means the heat pump is essentially operating in cooling mode. The indoor coil functions as an evaporator, absorbing heat from the conditioned space, and the outdoor coil temporarily functions as a condenser, releasing heat that melts any ice buildup on the coil.

Caution

Heat Pump Defrost Steam

When an air-source heat pump is defrosting, it may appear that smoke is coming from the outdoor unit. Someone not familiar with this phenomenon may assume part of the system is on fire or burning up. Be sure to inform new owners that an air-source heat pump emitting steam in cold weather is only defrosting and operating as it should.

Reverse cycle defrost involves drawing heat from the conditioned space for just long enough to defrost the outdoor coil. The main difference between standard cooling mode and reverse cycle defrost is that the outdoor coil fan is turned off during reverse cycle defrost. This allows more heat to be concentrated in the outdoor coil, causing the frost to melt faster. Unfortunately, this heat to defrost the outdoor coil is coming from the conditioned space. To alleviate discomfort that might result while defrosting occurs, auxiliary heat is used to warm the cool air being introduced to the conditioned space by the indoor coil. Often, auxiliary heat is in the form of electric heating coils.

Electric Heat Defrost

The second defrost method is *electric heat defrost*, which uses an electric resistance heater near the outdoor coil to melt ice and frost. The heater will operate if the outdoor coil starts to ice over. A low-temperature control shuts off the heat pump's compressor when electric heat defrost is necessary. With the compressor off, the heater can defrost the outdoor coil without the coil continuing to absorb heat, which would make defrosting more difficult. A low-temperature control's cutoff setting is usually predetermined by the manufacturer at 0°F (–18°C). This setting may be adjusted by a technician to meet local temperature conditions.

Pro Tip

Condensate Drain Heater

During the defrost cycle, heat pumps with a condensate drain may require that the outdoor coil condensate drain to be heated, typically with electric heat tape. This ensures that drain water can flow away from the unit without freezing and blocking the drain. If excess ice buildup is found in and around an outdoor unit, check to see if the condensate line is blocked with ice. If it is, the condensate line is not receiving enough heat.

40.5.3 Auxiliary Heat

A heat pump is effective only when the ratio of heat pump output to heat loss from the conditioned space is at or above the ***balance point***. This is the point at which the heat pump's output equals the heat loss of the conditioned space. If the ratio of heat pump output to heat loss is less than the balance point, auxiliary heat is required to prevent the conditioned space from getting colder. ***Auxiliary heat*** is a supplementary heat source that can be turned on automatically at a given set point or manually when it is not possible for an air-source heat pump to extract enough heat from the outside air.

Auxiliary heat is most often supplied by electric resistance heating coils, **Figure 40-34**. These require little space and are located in the air handler plenum. Electric heating coils may also be installed in the supply air ducts to distribute heated air to the conditioned space. In addition, auxiliary heat may be produced by a gas or oil furnace. When a gas or oil auxiliary heat system turns on, the air-source heat pump compressor shuts off.

Copyright Goodheart-Willcox Co., Inc.

ClimateMaster

Figure 40-34. Electric resistance heating coils are used to provide auxiliary heat in an air-source heat pump system.

Caution

Gas or Oil Furnace Auxiliary Heat

The heat produced by gas and oil furnaces for auxiliary heating cannot blow across a heat pump's indoor coil while the heat pump is operating. This added heat can cause the coil's head pressure to become extremely high and rupture the coil. During seasonal service, check system operation to ensure that the heat pump's compressor is not operating when gas or oil furnace auxiliary heat is operating.

Auxiliary heat is not as efficient to operate as a heat pump. Therefore, when auxiliary heat is running, the entire HVAC system's efficiency suffers. Auxiliary heat should be used only when necessary. The following are three major occasions when auxiliary heat is needed:

- When the outside temperature is so low that the heat pump cannot extract enough heat to keep the conditioned space warm.
- During reverse cycle defrost.
- For emergency operation, when a compressor is inoperable.

An air-source heat pump's heating output is directly related to the outdoor temperature. When the outdoor temperature drops, less heat is absorbed and pumped to the conditioned space. Heat pumps that operate in mild climates—where outdoor temperatures range from 20°F (–7°C) to 110°F (43°C)—typically do not require an auxiliary heat source. However, in colder climates, an air-source heat pump will not be able to produce enough heat to keep a conditioned space comfortable. Auxiliary heat is turned on to assist with the heating load. In such cases, auxiliary heat is automatically controlled by a room thermostat.

Auxiliary heat is also used to offset the cooling effect produced by reverse cycle defrost. When an air-source heat pump operates in reverse cycle defrost, it is essentially running in cooling mode. Heat absorbed by the indoor coil is pumped to the outdoor coil to melt frost or ice, removing heat from a conditioned space that is already calling for heat. By producing some heat, auxiliary heat keeps the defrost cycle from cooling the conditioned space.

If a heat pump's compressor becomes inoperable during the winter, the conditioned space will quickly become cold. Air-source heat pumps often have an *Emergency Heat* setting on the room thermostat. This thermostat setting allows the owner to manually turn off the heat pump and provide the conditioned space with auxiliary heat.

40.6 Heat Pumps and Solar Heating Systems

Variations of heat pumps have been designed to harness solar energy or use waste heat for domestic water heating. Several designs are used to link solar heating systems and heat pumps in residential applications. One system uses a solution of water and ethylene glycol to transfer the heat absorbed by the solar panels to the heat pump system. The solar panels are installed outside and a hydronic coil is placed in the air handler plenum, downstream from the indoor coil, **Figure 40-35**.

The solar panels are sized to meet the auxiliary heating needs of a heat pump. The solar panels absorb heat from the sun and transfer the heat to water in a heat storage tank. This heated water passes from the storage tank through the hydronic coil in the plenum to provide auxiliary heat when needed. The heat pump system will draw heat from the solar panels until the outdoor temperature drops to the point where additional auxiliary heat is required, usually from electric resistance heaters. A liquid-to-liquid heat exchanger can also be installed to provide domestic water heating.

Solar heating systems help heat pumps provide very efficient heating at minimum operating costs. In mild climates with a significant solar load, the solar panels can provide the needed auxiliary heat when the outdoor temperature drops below 20°F (–7°C). The cost of providing auxiliary heat with solar panels can be as little as 40% of the cost of electric resistance heating. However, the overall efficiency of a solar heating system depends on the location of the home and the amount of solar load available during winter months.

Copyright Goodheart-Willcox Co., Inc.

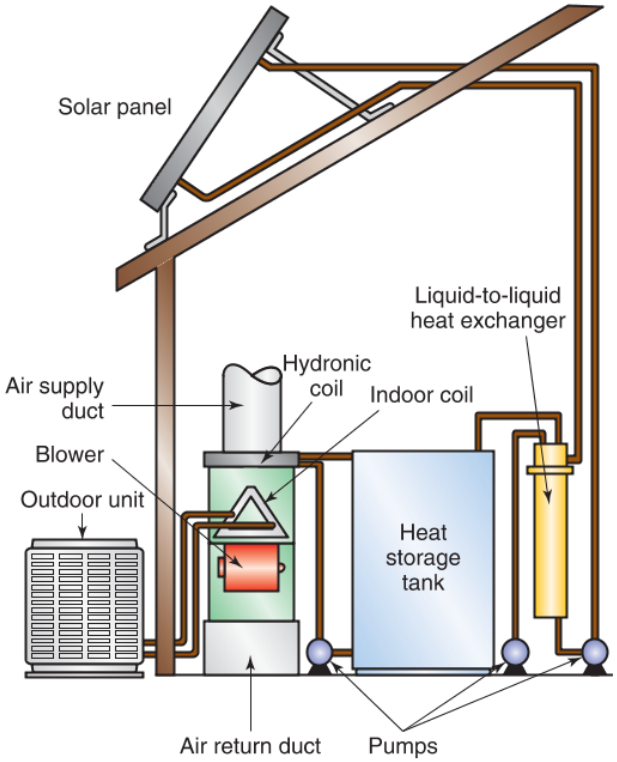

Goodheart-Willcox Publisher

Figure 40-35. A solar heating system can provide auxiliary heat for a heat pump and help heat water for domestic use.

40.7 Heat Pump System Service

Heat pump systems differ from combustion heating systems and electric heating systems in their method of heat production. In many ways, heat pump systems are similar to other mechanical refrigeration systems in that they use many of the same operational and control devices. They also have the same purpose as other refrigeration systems, which is to displace heat for a designed purpose using expansion and compression of refrigerant.

Many of the installation and service instructions in Chapter 32, *Residential Central Air-Conditioning Systems* and Chapter 33, *Commercial Air-Conditioning Systems* can be applied to heat pumps. However, as a result of their ability to move heat in either direction, heat pumps are generally more complicated than other air-conditioning systems. Likewise, service performed on heat pumps may be more complicated. Areas of interest include the reversing valve, various sensors, controllers and their settings, and the indoor and outdoor coils.

40.7.1 Heat Pump Installation

Heat pumps must be carefully leveled. Electrical service must be the correct voltage and phase, and the wiring must be large enough to carry the electrical current without a critical voltage drop. See **Figure 40-36**.

Most standard split air-conditioning units do not run in cold seasons, but an air-source heat pump does. In areas where snow falls, airways above and around a heat pump's outdoor unit can become blocked. In cold climates, air-source heat pumps should be installed above the predictable total snow height for that area. This is approximately 8″ to 18″ (20 cm to 46 cm) aboveground in most localities. Always advise the owner to brush or shovel snow away from an air-source heat pump's outdoor unit. However, using ***risers*** is the best way to prevent blocking side airways, **Figure 40-37**.

Heat pump units installed in windows or mounted on walls use some of the same mounting techniques as those described in Chapter 31, *Ductless Air-Conditioning Systems*. A technician should closely follow manufacturer instructions. See **Figure 40-38**.

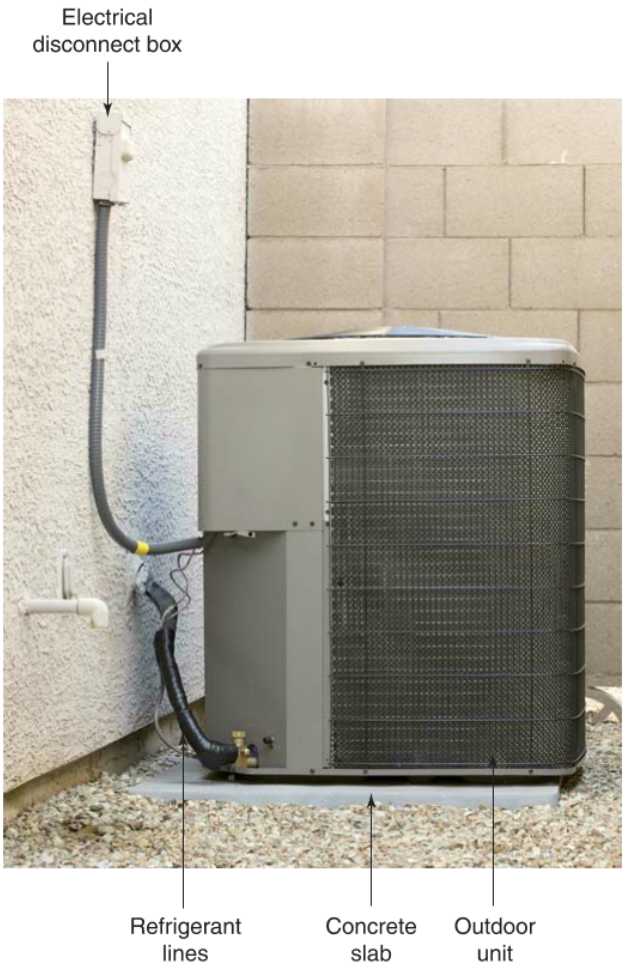

You Touch Pix of EuToch/Shutterstock.com

Figure 40-36. This outdoor unit of an air-source heat pump is mounted on a level concrete slab outside of a building.

Copyright Goodheart-Willcox Co., Inc.

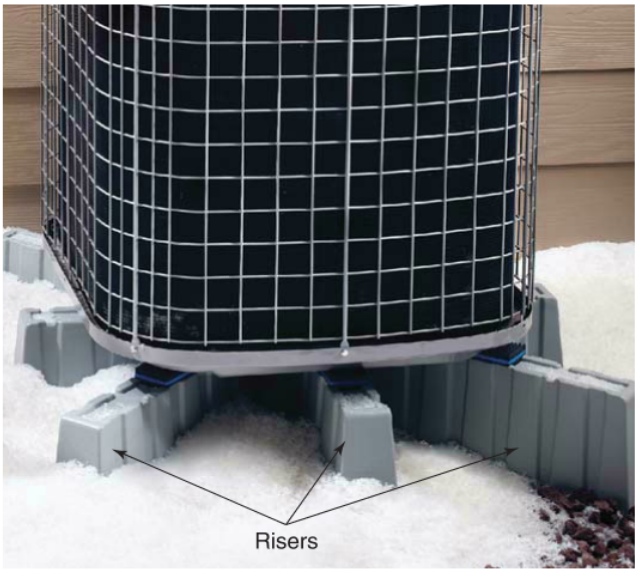

DiversiTech Corporation

Figure 40-37. Heat pump risers keep an outdoor unit above the ground and help to prevent blocking side airways.

Inhabitant/Shutterstock.com

Figure 40-38. The outdoor unit of an air-source heat pump mounted on a wall using brackets.

Compared to combustion heating systems, the temperature of the heated air provided by heat pump systems is generally lower at room registers. Therefore, heat pump systems take longer to heat up a cold room than combustion heating systems. This may result in many first-time customer complaints about new heat pump installations.

40.7.2 Heat Pump Maintenance

When servicing residential heat pumps, there are specific procedures that should be performed to ensure maximum heat pump efficiency. The entire system should be inspected and serviced each season before it is used. Although the customer can perform simple maintenance procedures, such as replacing air filters, the following procedures should be performed by a service technician:

- Inspect and tighten all electrical connections. Check for corrosion inside all disconnect boxes and breaker boxes. If applicable and accessible, clean thermostat contact points.
- Check for tightness of thermistors and sensors. Clean and tighten as necessary.
- Inspect and thoroughly clean the indoor coil.
- Clean the indoor condensate drain pan and condensate trap.
- Use a high-pressure air hose to clean the drain line. When done, prime the trap and flush the drain line with one part household bleach to four parts water.
- Clean out duct passages and replace the indoor air filter. Check dampers in ducts and verify proper airflow.
- Clean the indoor blower and rebalance if necessary.
- Lubricate both the motor and blower bearings. Check belts for cracks and replace if necessary.
- Clean the outdoor unit. Apply a non-acid coil cleaner and rinse thoroughly with water. Clean the outdoor unit's base pan and check drainage ports for blockage. Check the gas and liquid lines for sweating or frosting.
- Verify proper voltage and current draw of indoor and outdoor electrical components: fan motors and compressor.
- Measure, record, and adjust (as necessary) the refrigerant charge of the system. Always follow manufacturer procedures. Typically, the refrigerant charge should be checked when the outdoor temperature is above 70°F (21°C) for cooling and below 40°F (4°C) for heating.

Copyright Goodheart-Willcox Co., Inc.

- Measure and record superheat and subcooling values during normal operation.
- Check the operation of the reversing valve by running the system on each cycle. A reversing valve that does not operate must be replaced.
- Run the system and check for leaks and any unusual operational noise. Verify proper operation in the cooling mode, heating mode, and defrost mode.

In addition to performing these maintenance procedures, ask the customer about any problems or concerns. This will build a positive rapport with the customer. In addition, the information the customer provides will assist in diagnosing problems. If the customer reports any problems, the cause of the problem must be located and repaired. Always check the operation of the thermostat before any major changes are made. Review Chapter 36, *Thermostats*, for additional information.

40.7.3 Troubleshooting Heat Pumps

Troubleshooting a heat pump system is a process that involves using a troubleshooting chart. Care must be taken to ensure that a troubleshooting chart from a manufacturer is specific to the unit being serviced. Any additional system components must also be taken into consideration.

Prior to using a chart, a technician should listen to the customer's complaint. Common complaints include insufficient heating, insufficient cooling, excessive operation, and noisy operation. The chart should be carefully studied for all aspects and the appropriate possible causes located. The possible causes determine the test method or remedy to be used. For example, if the customer complains that a system is not working, follow the first column "System Will Not Start" down to the first intersecting row, which lists "Power failure" as the possible cause. The chart shows that the appropriate test method is to test the supply voltage, **Figure 40-39**.

Service Problem Analysis Guide for Heat Pump

Possible Cause	Complaint																			Test Method/ Remedy
	No Heating or Cooling												No Cooling			No Heating				
	System Will Not Start	Compressor Will Not Start—Fans Run	Compressor and Outdoor Fan Will Not Start	Indoor Fan Will Not Start	Outdoor Fan Will Not Start	Compressor Hums—Will Not Start	Compressor Cycles on Overload	Compressor Is Noisy	High Head Pressure	Low Head Pressure	High Suction Pressure	Low Suction Pressure	System Runs Continuously—Little Cooling	Too Cool and Then Too Warm	Not Cool Enough on Warm Days	Compressor Runs Continuously—Little Heat	System Runs—Blows Cold Air	Unit Defrosts—No Frost on Coil	Unit Will Not Terminate Defrost	Unit Will Not Defrost	
Power failure	✓																				Test voltage
Blown fuse	✓																				Inspect fuse type and size
Loose connection	✓					✓															Inspect connections
Shorted or broken wires	✓	✓	✓	✓	✓	✓															Test circuits with ohmmeter
Open overload		✓																			Test continuity of overload

Amana Refrigeration, Inc.

Figure 40-39. A portion of a heat pump troubleshooting chart for a specific heat pump unit.

Copyright Goodheart-Willcox Co., Inc.

Complaints regarding a foul odor during heat pump operation have become known as ***dirty sock syndrome***. This is due to the description of an odor of gym socks emanating from the room registers. The cause of this problem is the growth of mold and bacteria on the indoor coil. Heat pumps are susceptible to mold growth because their heating cycles are not hot enough to kill the microbes that thrive on the indoor coil during the cooling season. This mold creates a maintenance problem and results in dirty coils, decreased efficiency, dirty drain pans, and excessive energy use. The most successful way to eliminate bacteria and mold is through the use of germicidal ultraviolet lights, **Figure 40-40**.

The ultraviolet light attacks the bacteria and mold and either kills them immediately or prevents them from reproducing. Continued exposure degrades any organic material. Although ultraviolet lights remove almost all of the organic material found on the indoor coil, the plenum area and the drain pan should still undergo periodic chemical cleaning. See **Figure 40-41**.

DiversiTech Corporation

Figure 40-40. An ultraviolet light kit allows a technician to install a UV germicidal light in the best location possible in existing systems.

DiversiTech Corporation

Figure 40-41. Chemical tablets used to destroy odors and maintain a clean drain pan.

Caution

Plastic Drain Pans

Do not shine ultraviolet light on plastic drain pans. Ultraviolet light causes plastic and rubber to deteriorate. Place a shade or cover over the condensate drain pan to prevent ultraviolet rays from contacting any plastic drain pan.

11

There will be times when a heat pump's reversing valve goes bad and must be replaced. This can be a complicated procedure. There are four separate tubes going to this device that must be disconnected. If disconnecting at the stubs, remember that the tubes will have hardened brazing material that may need to be filed off. If this is necessary, it could be difficult to do this without getting filings down the tubing and into the refrigerant circuit. For this reason and the tightness of the overall fit, some technicians prefer to install all new tubing to the reversing valve. This can make initial fit-up work easier and help prevent filings and other contaminants from getting into the system.

Copyright Goodheart-Willcox Co., Inc.

A reversing valve has certain components that are not designed to withstand the high heat produced by a brazing torch. A wet rag wrapped around the reversing valve's body or heat-blocking paste or gel can help prevent heat damage. Brazing tubing to a reversing valve can be tricky due to its arrangement. Using a tuning fork brazing tip can make the job quicker and easier, **Figure 40-42**.

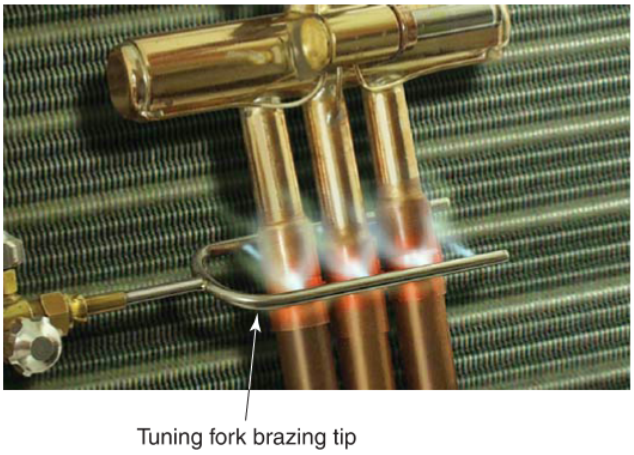

Uniweld Products, Inc.

Figure 40-42. A tuning fork brazing tip uses multiple flames to distribute heat equally over the three tubing connections on one end of a reversing valve.

Copyright Goodheart-Willcox Co., Inc.

Chapter Review

Summary

- A heat pump is a compression refrigeration system in which the flow of refrigerant can be reversed to transfer heat into or out of a conditioned space.
- When a heat pump is in heating mode, the outdoor coil functions as an evaporator, and the indoor coil functions as a condenser. In cooling mode, the direction of refrigerant flow is reversed, and the indoor coil functions as an evaporator, while the outdoor coil functions as a condenser.
- Air-source heat pumps use the outdoor air as a heat source or heat sink. Ground-source heat pumps use the ground or a body of water as a heat source or a heat sink.
- In direct-exchange heat pumps, the outdoor coil is composed of tubing coils buried underground, so refrigerant circulating through them directly exchanges heat with the earth. In water-source heat pumps, a loop filled with water acts as the heat-transfer medium between the earth or body of water and the heat pump's refrigerant circuit (water coil).
- Accumulators are installed in the suction line between the reversing valve and compressor inlet to prevent liquid slugging, especially during the heating mode. Instead of an accumulator, some systems use a charge compensator tank installed in the liquid line to hold excess liquid refrigerant.
- The most commonly used metering devices in heat pumps are thermostatic expansion valves (TXVs). A biflow TXV has an internal check valve that allows refrigerant to flow in both directions. Note that there are two different types of biflow TXVs: byflow *bypass* TXV and biflow *metering* TXV. Fixed-orifice metering devices, capillary tubes, and flow check pistons can also be used as metering devices in a heat pump.
- Reversing valves are used to reverse the direction of refrigerant flow through a heat pump system. Direct-acting reversing valves use the direct action of a solenoid plunger to change the valve position. A pilot-operated reversing valve uses a solenoid pilot valve and the pressure difference between the suction and discharge lines to control the reversing valve's position.
- The term *coil* refers to tubing that circulates refrigerant. The term *loop* refers to tubing or piping that circulates water or a water solution. Coils and loops are named for the substances that contact the exterior of the tubing (air, ground, or water). Loops can be further classified as horizontal or vertical, series or parallel, and open or closed.
- The two most common methods for defrosting a heat pump are electric heat defrost and reverse cycle defrost. Reverse cycle defrost briefly reverses refrigerant flow through the heat pump to melt ice buildup on the outdoor coil. Electric heat defrost uses electric resistance heaters to melt ice on the outdoor coil.
- Auxiliary heat is a supplementary heat source that is activated when a heat pump is unable to meet the heating demands of the conditioned space. Auxiliary heat is also used during reverse cycle defrost to keep the defrost cycle from cooling the conditioned space. In some cases, auxiliary heat can function for emergency heat.
- Solar heating systems can be used in combination with heat pumps to provide auxiliary heat and domestic water heating. Depending on climate conditions and installation, solar panel heating can be a cost-effective method of providing auxiliary heat over electric resistance heating.
- When servicing a heat pump system, a technician should inspect electrical connections, clean coils and drain pans, replace filters, check the refrigerant charge, check for leaks, and run the system to check operation in each of the different modes.
- Technicians should always refer to manufacturer-specific troubleshooting charts when they are available. A common problem in air-source heat pumps is dirty sock syndrome, which occurs when mold and bacteria grow on the indoor coil and produce a foul odor. To kill the bacteria and mold on the coil, use a germicidal ultraviolet light. Plenums and condensate drain pans should be regularly cleaned.

Copyright Goodheart-Willcox Co., Inc.

Review Questions

Answer the following questions using the information in this chapter.

1. When a heat pump switches from heating to cooling mode, _____.
   A. the blower fan reverses
   B. the outdoor fan turns off
   C. refrigerant flow through the compressor reverses
   D. refrigerant flow through the system reverses
2. When a heat pump is operating in heating mode, the outdoor coil _____.
   A. functions as a condenser
   B. functions as an evaporator
   C. functions as a metering device
   D. is disabled
3. In a heat pump, the direction of refrigerant flow through its compressor _____.
   A. changes direction based on the reversing valve
   B. is always in the same direction
   C. reverses in cooling mode
   D. reverses in heating mode
4. The two main types of air-source heat pumps are _____ heat pumps.
   A. air-to-air and air-to-water
   B. direction-exchange and air-to-water
   C. water-source and air-to-air
   D. water-source and direct-exchange
5. Which of the following statements about air-source heat pumps is true?
   A. As outdoor temperature decreases, the heating mode becomes less efficient.
   B. The reversing valve changes the direction of airflow through a building.
   C. When the heat pump is in cooling mode, the indoor coil serves as a condenser.
   D. When the heat pump is in heating mode, the indoor coil serves as an evaporator.
6. A(n) _____ heat pump uses a water coil to transfer heat between the refrigerant and the ground or water loop.
   A. air-source
   B. air-to-water
   C. direct-exchange
   D. water-source
7. In a direct-exchange heat pump, _____.
   A. refrigerant circulates through a copper coil buried in the ground
   B. water in a ground loop absorbs heat and transfers it to the system through a water coil
   C. a well or lake serves as both the supply and discharge source for the system
   D. None of the above.
8. The amount of liquid refrigerant in a charge compensator tank is affected by the temperature of the _____, which runs through the center of the tank but does not open inside it.
   A. accumulator line
   B. gas line
   C. liquid line
   D. reversing valve
9. A crankcase heater helps protect a heat pump compressor from _____.
   A. current overloads
   B. overheating
   C. migration of liquid refrigerant during the Off cycle
   D. All of the above.
10. In a heat pump system with two thermostatic expansion valves, a _____ is installed in tubing parallel to the TXVs to allow refrigerant to flow in both directions.
    A. biflow TXV
    B. capillary tube
    C. check valve
    D. flow check piston
11. A biflow thermostatic expansion valve _____.
    A. allows refrigerant flow in either direction
    B. cannot be used with a heat pump
    C. has a sensing bulb with an increased gas charge
    D. provides unrestricted refrigerant flow in both directions
12. The tubing stub on a reversing valve that is by itself on one side is always connected to the _____.
    A. discharge line
    B. indoor coil
    C. outdoor coil
    D. suction line

Copyright Goodheart-Willcox Co., Inc.

13. A pilot-operated reversing valve changes valve position by _____.
    A. centrifugal force
    B. a direct-acting solenoid
    C. the forces of suction and discharge pressure
    D. a stepper motor
14. The term *coil* refers to tubing that carries refrigerant, and the term *loop* refers to tubing that _____.
    A. carries water or a water solution
    B. is always buried underground
    C. is arranged in a perfectly circular shape
    D. is the exact same thing as coil
15. A water loop should be submerged at least _____ feet deep in a pond or lake.
    A. 6
    B. 10
    C. 15
    D. 30
16. Ground loops can be subclassified as _____.
    A. series or parallel
    B. horizontal or vertical
    C. open or closed
    D. All of the above.
17. Which heat pump thermostat wiring terminal is used to control the reversing valve?
    A. G
    B. O/B
    C. W2
    D. Y1
18. A heat pump's defrost cycle is typically initiated by _____.
    A. a room thermostat
    B. a temperature sensor
    C. a timer
    D. both a timer and temperature sensors
19. The point at which a heat pump's output equals the heat loss of the conditioned space is the _____.
    A. absolute zero point
    B. balance point
    C. heat transfer equilibrium
    D. zero gain zone
20. In an air-source heat pump, electric resistance heaters may be used for _____.
    A. auxiliary heat
    B. defrost
    C. emergency heat
    D. All of the above.
21. In which of the following situations should auxiliary heat *not* be used? To provide heating _____.
    A. during reverse cycle defrost
    B. if the outdoor temperature drops below the heat pump's operating range
    C. in the event of a compressor failure
    D. when outdoor air temperature is over 65°F
22. During the cold season, an air-source heat pump's outdoor unit runs the risk of having its side airways blocked by accumulating snow. What can be included during installation to reduce this risk?
    A. A constant-operation fan in the outdoor unit.
    B. A crankcase heater.
    C. Risers.
    D. A wall-mounted electrical disconnect.
23. Which of the following service procedures should *not* be performed by a technician during a heat pump system's inspection?
    A. Check the operation of the reversing valve.
    B. Clean the indoor blower.
    C. Replace the indoor air filter.
    D. Vent any extra refrigerant if the refrigerant charge seems high.
24. A problem caused by the growth of mold and bacteria on a heat pump's indoor coil is called _____.
    A. bad breath (halitosis) affliction
    B. dirty sock syndrome
    C. drain pan rot
    D. germicidal apocalypse
25. Which of the following heat pump system components cannot be exposed to ultraviolet light?
    A. Blower wheel.
    B. Indoor coil's aluminum fins.
    C. Plastic drain pan.
    D. Return air duct.

Copyright Goodheart-Willcox Co., Inc.

CHAPTER 41 Gas-Fired Heating Systems

Chapter Outline

41.1 Gas Furnace Operation Overview
41.2 Combustion
- 41.2.1 Heat
- 41.2.2 Oxygen
- 41.2.3 Fuel
- 41.2.4 Combustion Efficiency

41.3 Gas Valves
41.4 Gas Burners
- 41.4.1 Atmospheric Gas Burners
- 41.4.2 Power Burners

41.5 Ignition Systems
- 41.5.1 Standing-Pilot Ignition System
- 41.5.2 Intermittent-Pilot Ignition System
- 41.5.3 Direct-Spark Ignition (DSI) System
- 41.5.4 Hot-Surface Ignition (HSI) System

41.6 Gas Furnace Controls
- 41.6.1 Ignition Control Modules
- 41.6.2 Safety Controls
- 41.6.3 Combustion Blower Controls

41.7 Gas Furnace Efficiency
- 41.7.1 Mid-Efficiency Gas Furnaces
- 41.7.2 High-Efficiency Gas Furnaces

41.8 Gas Furnace Venting Categories
41.9 Gas-Fired Radiant Heat
41.10 Gas-Fired Heating System Service
- 41.10.1 Gas Piping Installation
- 41.10.2 Heat Exchanger Service
- 41.10.3 Gas Furnace Maintenance
- 41.10.4 Troubleshooting Gas Furnaces
- 41.10.5 Venting System Installation

Learning Objectives

Information in this chapter will enable you to:

- Identify the components necessary for and products of combustion.
- Understand how the ratio of air to fuel affects combustion efficiency.
- Determine a furnace's combustion efficiency by measuring different flue gas variables.
- Summarize the operation and purpose of gas valves and gas burners.
- Explain the difference between atmospheric gas burners and power burners.
- Compare and contrast the methods used by different ignition systems to initiate and monitor combustion.
- List the functions managed by ignition control modules.
- Identify and explain the operation of various furnace safety controls.
- Describe the differences in design between medium-efficiency and high-efficiency gas furnaces.
- Install piping for a gas-fired heating system and perform a pressure test to check for leaks.
- Inspect a heat exchanger in a gas-fired heating system for leaks and perform other routine maintenance and service procedures.
- Install both horizontal and vertical piping for venting combustion heating systems.
- Classify the different types of materials used for chimneys and flue pipes.

Technical Terms

100% shutoff
100% shutoff with continuous retry
annual fuel utilization efficiency (AFUE) rating
atmospheric gas burner
bonnet
Category I furnace
Category II furnace
Category III furnace
Category IV furnace
combination gas valve
combustion
combustion air
combustion efficiency
complete combustion
direct-spark ignition (DSI) system
direct-venting system
draft regulator
drip leg
electric interlock
electromagnetic interference (EMI)
end switch
excess air
flame rectification
flame rollout
flammability limit
gas burner
gas manifold
glow coil
hard lockout
high-efficiency gas furnace
high-limit switch
hot-surface igniter
hot-surface ignition (HSI) system
ignition system
ignition temperature
incomplete combustion
inshot burner
integrated ignition control module
intermittent-pilot ignition system
inter-purge
lean
local sensing
LP gas
mid-efficiency gas furnace
non-100% shutoff
nonintegrated ignition control module
pilot light
post-purge
power burner
pre-purge
pressure switch
primary air
remote sensing
ribbon burner
rich
rollout switch
sail switch
secondary air
slotted burner
soft lockout
spark igniter
spud
stack temperature
standing-pilot ignition system
stoichiometric combustion
thermal detection system
trial for ignition (TFI)
ultimate carbon dioxide content
venturi effect

Review of Key Concepts

Reviewing these concepts from earlier chapters will help you understand new concepts presented in this chapter:

- A heat exchanger in a furnace is a chamber where the heat of combustion is transferred to the conditioned air. Heat exchangers also carry combustion gases to the exhaust flue where they are released outdoors. (Chapter 38)
- A solenoid valve is an electromagnet with a movable core, called a plunger, that opens and closes a fluid passage. (Chapter 22)
- A venturi is an internal restriction in a passageway that causes fluid to speed up as it passes through the restriction, creating a low pressure. (Chapter 39)
- Combustion blowers bring fresh air into the combustion chamber and expel combustion gases out through the heat exchanger and flue. There are two types of combustion blowers: induced-draft blowers and forced-draft blowers. (Chapter 38)
- A rollout switch is a safety control that shuts down a gas-fired heating system if the burner flames "roll out" or travel beyond the combustion chamber. (Chapter 39)

Introduction

This chapter covers the process of combustion, the fuel gases used in heating, and the operation of the components in gas-fired heating. The operation of a gas-fired, forced-air furnace starts when a thermostat or other controller calls for heat. When the temperature in the conditioned space drops to the cut-in temperature, the thermostat initiates a call for heat. At the furnace, the heating process begins with the fuel gas.

Videos

- Combustion Efficiency
- Gas Furnace Venting
- Gas Furnace Inspection and Maintenance
- Gas Supply Piping

41.1 Gas Furnace Operation Overview

In a gas-fired, forced-air furnace, fuel gas is piped to the furnace and kept under constant low pressure by a pressure regulator. This low-pressure gas is controlled by a gas valve. Often, a pressure regulator is built into the gas valve. When heat is called for, a solenoid valve in the gas valve opens to allow fuel gas to pass into a manifold that distributes the gas into individual gas burners. The furnace's safety controls verify certain conditions before igniting the flame. Ignition methods vary and are discussed in detail later in this chapter, **Figure 41-1**.

After ignition, the gas burners continue to release fuel gas, which feeds the flames in the heat exchanger. The part of the heat exchanger containing the flames is called the combustion chamber. Heat from the flames warms the heat exchanger. An indoor blower circulates cool air from the conditioned space across the outside of the heat exchanger. The cool air picks up heat from the heat exchanger and is then distributed through a supply duct system to warm the conditioned space. Fuel gas consumed by the flames in the heat exchanger turns into exhaust fumes that are vented to the outdoors through the flue. In some furnaces, an inverted opening in the flue, called an air break, helps keep a constant pressure in the combustion chamber and prevents back

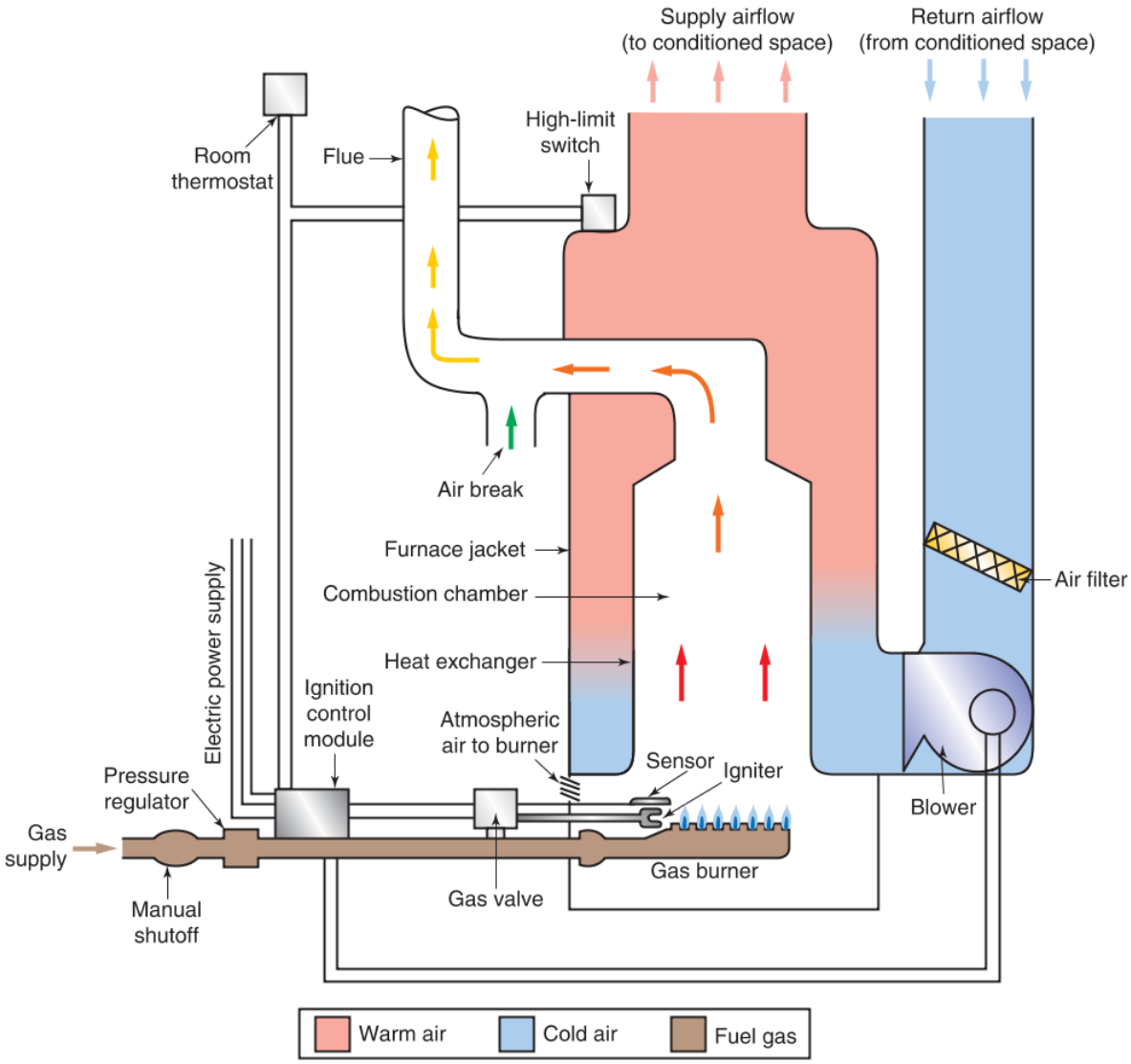

Goodheart-Willcox Publisher

Figure 41-1. Simplified diagram of a gas-fired, forced-air furnace.

Copyright Goodheart-Willcox Co., Inc.

pressure from ambient air from reaching the furnace flame. When the thermostat is satisfied, it ends its call for heat and the furnace cycles off.

41.2 Combustion

Combustion is a chemical process of rapid oxidation in which fuel and oxygen produce heat and light. Combustion fuels most commonly used for heating purposes are natural gas, liquefied petroleum (LP) gas, and fuel oil. The physical properties of a fuel are considered when determining requirements for combustion.

The three basic elements necessary for combustion are fuel, heat, and oxygen, **Figure 41-2**. Combustion occurs when the chemicals in the fuel combine rapidly with oxygen. Heat is required to initiate the reaction. As the fuel and oxygen combine, heat and light energy are released. The following chemical formula shows the products of stoichiometric combustion:

Formula for stoichiometric combustion:

$$CH_4 + 2\,O_2 = CO_2 + 2\,H_2O + \text{energy}$$

where

CH_4 = methane
O_2 = oxygen
CO_2 = carbon dioxide
H_2O = water

Stoichiometric combustion is the term for perfect combustion. In stoichiometric combustion, the burning of fuel occurs with the exact amount of oxygen needed to change the carbon and hydrogen molecules into water and carbon dioxide. Although gas furnaces cannot achieve stoichiometric combustion, they can achieve ***complete combustion***, which occurs when fuel is burned in the presence of excess oxygen to produce water and carbon dioxide. Nevertheless, a technician must understand the formula for stoichiometric combustion in order to analyze the combustion process. The formula shows that in stoichiometric combustion, the ratio of oxygen to fuel (methane) is 2:1 and that the only products of combustion are carbon dioxide, water, and energy.

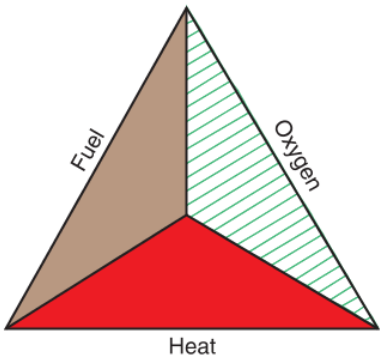

Goodheart-Willcox Publisher

Figure 41-2. The combustion triangle shows all three components necessary for combustion to occur.

41.2.1 Heat

A concentration of heat is needed to start the chemical process of combustion. The heat required to initiate combustion, called the ***ignition temperature***, is typically provided by a pilot light or a heated surface. The ignition temperature of natural gas is between 1100°F and 1200°F (593°C and 649°C). In comparison, the ignition temperature of LP gas is between 920°F and 1020°F (493°C and 549°C). Once the combustion process has begun, chemical energy stored in the fuel is released and converted to heat and light energy. As long as the fuel and oxygen are present in the correct ratio, no additional external input of heat is required to sustain combustion.

41.2.2 Oxygen

Combustion can occur only when the ratio of air to fuel is within an acceptable range. Although the ideal oxygen to methane ratio is 2:1, the ratio of air to fuel must be much higher (about 10:1 for methane) because the air is made up of about 78% nitrogen and only 21% oxygen. In a mixture of fuel and air, the fuel's ***flammability limits*** are defined as the range of fuel concentrations within which the fuel will burn when an ignition source is present. Each fuel source has unique flammability limits required for combustion. See **Figure 41-3**.

Fuel Gas Flammability Limits

Fuel Gas	Upper Flammability Limit (%)	Lower Flammability Limit (%)
Methane	14.0	5.3
Ethane	12.5	3.2
Natural gas	14.0	4.0
Propane	9.5	2.4
Butane	8.5	1.9

Goodheart-Willcox Publisher

Figure 41-3. The range of fuel concentrations within which proper combustion occurs for various fuel gases. A mixture that is too lean will not burn, and a mixture that is too rich either will not burn or will result in incomplete combustion (unburned fuel in the exhaust).

Copyright Goodheart-Willcox Co., Inc.

For example, for combustion to take place with natural gas, the fuel-air mixture must have a concentration of natural gas between 4% and 14% (to go with 96% or 86% air). The ideal concentration is between 8% and 10% natural gas. A concentration of natural gas less than 4% is too ***lean***, meaning there is not enough fuel for combustion. A concentration of natural gas greater than 14% creates a mixture that is too ***rich***, meaning there is not enough oxygen available for all of the fuel present.

The amount of air required for combustion is different for each fuel. ***Primary air*** is air mixed with fuel prior to ignition. Enough primary air must be available to support ignition. As oxygen is consumed during the combustion process, it must be constantly replaced. ***Secondary air*** is air added to a flame after ignition to support combustion, **Figure 41-4**. Secondary air surrounds the outermost area of a flame and maintains the combustion process. Primary air and secondary air are commonly referred to together as ***combustion air***. This is the air that is necessary for complete combustion.

41.2.3 Fuel

All fuels contain hydrogen and carbon atoms in varying amounts. Substances that contain only hydrogen and carbon are referred to as *hydrocarbons*. Because hydrogen burns more quickly and at a lower temperature than carbon, hydrogen burns first, using the oxygen from the air that it needs for complete combustion. Hydrogen flames are a bluish color.

Since the hydrogen in the fuel burns before the carbon, the carbon atoms must travel to the outside edge of the flame to get oxygen from secondary air for complete combustion to occur. Carbon particles burn more slowly and at a higher temperature than hydrogen. A carbon flame produces a bright yellow light.

Flame color indicates when a proper amount of primary air is present in a gas furnace. The flame should have a blue inner core surrounded by light blue. This indicates that there is no unburned carbon. ***Incomplete combustion*** occurs when a flame does not receive enough oxygen to finish the combustion process. If there is insufficient primary air, the flame tip will be yellow, **Figure 41-5**.

A yellow tip is due to carbon particles that are not burned. If the outer edges of the flame burn orange, it is due to the burning of dust particles drawn in with the primary air, and it is not a sign of a lack of primary air.

Safety Note

Carbon Monoxide

A by-product of incomplete combustion is carbon monoxide. Carbon monoxide is a colorless, odorless, highly toxic gas that can be fatal to a building's occupants. Therefore, all service calls must include inspection of the flame during operation to check for incomplete combustion. A carbon monoxide meter is a quick method of checking CO levels, **Figure 41-6**.

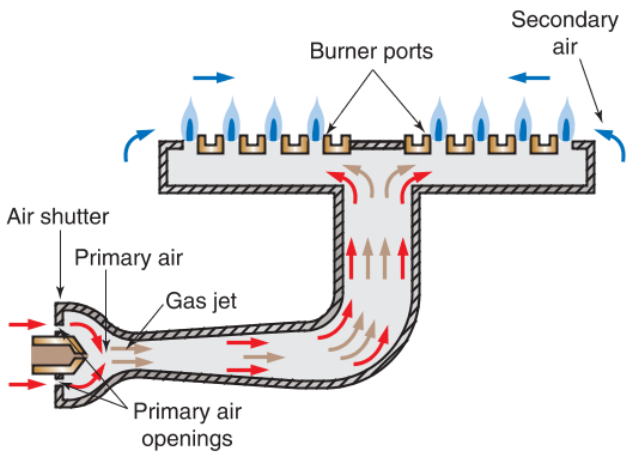

Goodheart-Willcox Publisher

Figure 41-4. Primary air enters the gas stream prior to ignition through an air shutter. Secondary air surrounds the flames' outermost areas and supports complete combustion of the fuel gas.

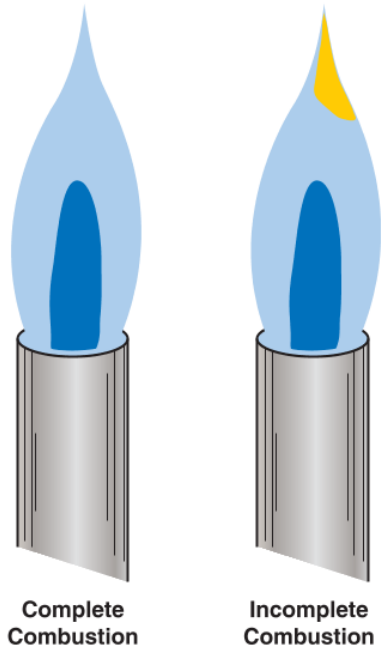

Goodheart-Willcox Publisher

Figure 41-5. A lack of primary air causes incomplete combustion. Without enough oxygen, some carbon particles are not being burned, which results in a yellow tip on the flame.

Copyright Goodheart-Willcox Co., Inc.

Fluke Corporation

Figure 41-6. A technician using a carbon monoxide meter on a gas furnace.

There are two primary types of fuel gases used in gas furnaces:

- Natural gas.
- Liquefied petroleum (LP) gas.

Natural Gas

Natural gas is obtained from gas deposits in the ground. Natural gas is lighter than air and consists of about 95% methane (CH_4) and 5% ethane (C_2H_6) or other hydrocarbons. Natural gas has a heating value between 1000 Btu/ft^3 and 1100 Btu/ft^3. To burn 1 ft^3 of natural gas, 10 ft^3 of air is required. However, some excess air is needed to prevent the possibility of incomplete combustion. Therefore, about 15 ft^3 of air is used for each cubic foot of natural gas, which provides 50% excess air.

Excess air is any secondary air that exceeds the amount of air necessary for complete combustion. By designing furnaces to take in a certain amount of excess air, manufacturers provide a safety buffer in case of damage or a malfunction that impedes airflow and reduces the amount of air provided for combustion. While furnaces with lower efficiency ratings take in between 20% and 50% excess air to ensure complete combustion, furnaces with higher efficiency ratings use as little as 10% excess air.

Excess air is also important for condensing furnaces as it reduces the dew point of the flue gas. Dew point is the temperature at which a gas condenses into a liquid. By reducing the dew point, excess air causes the flue gas to condense at a lower temperature, ensuring that a furnace will capture the heat of condensation from the flue gas.

As a mix of 1 ft^3 of natural gas and 15 ft^3 of air burns, it yields about 1 ft^3 of carbon dioxide and 2 ft^3 of water vapor. It also yields 12 ft^3 of nitrogen and 1 ft^3 of oxygen, which are leftover from the excess air used in the combustion process. If there is too much primary air, the flame will be noisy and jump around above the burner. If the exhaust contains carbon monoxide (CO), there is either too little or too much combustion air.

LP (Liquefied Petroleum) Gas

LP gas is liquefied petroleum, which consists of liquefied propane (C_3H_8) and butane (C_4H_{10}). Most commonly, this mixture is primarily propane with some butane. Because LP gas is heavier than air, it can be easily liquefied under pressure, stored, and transported in cylinders or tanks. When the pressure is reduced as the LP gas leaves the tank, it vaporizes and changes into its gaseous form before it is burned.

Propane boils at –44°F (–42°C) at atmospheric pressure and has a heating value of 2500 Btu/ft^3. Butane boils at 32°F (0°C) and has a heating value of 3200 Btu/ft^3. Although LP gas can produce more heat per pound than natural gas, it requires more oxygen as well for complete combustion. To burn 1 ft^3 of LP gas, 24 ft^3 of air is required. About 35 ft^3 of air is needed to provide 50% excess air.

41.2.4 Combustion Efficiency

Combustion efficiency is a measure of a furnace's combustion quality, which is essentially its ability to achieve complete combustion. Incomplete combustion can cause a loss of flame temperature, carbon monoxide production, and reduced heat transfer in the heat exchanger. To test a furnace's combustion efficiency, a technician measures the following variables:

- Carbon dioxide content.
- Oxygen content.
- Carbon monoxide content.
- Gas pressure.
- Stack temperature.

Carbon Dioxide (CO_2) Content

Carbon dioxide content is measured as a percentage of the total flue gas being vented to the outdoors. Technicians can use a combustion analyzer to measure carbon dioxide content. To measure the carbon dioxide content in the flue gas, a technician places the analyzer's sensor in the flue or vent pipe. In addition to measuring carbon dioxide content, combustion analyzers

Copyright Goodheart-Willcox Co., Inc.

are often capable of measuring other variables, such as oxygen content, carbon monoxide content, and stack temperature, **Figure 41-7**.

Ultimate carbon dioxide content is the specific amount of carbon dioxide by volume that is present in flue gas when the exact amount of air is supplied to achieve complete combustion. For natural gas, the ultimate carbon dioxide content is approximately 11.9%. LP gas produces around 13.9% carbon dioxide by volume. However, these values do not take into account the excess air that a furnace takes in to ensure complete combustion. This excess air dilutes the amount of carbon dioxide by volume in the flue gas. As a result of excess air dilution, the carbon dioxide content for natural gas furnaces should be closer to 7.6%. For LP gas furnaces, the carbon dioxide content should be approximately 8.9%.

Oxygen (O_2) Content

Since excess air provides excess oxygen to help ensure complete combustion, the oxygen content in flue gas can also be used as a measure of combustion efficiency. For both natural gas and LP gas furnaces, the percentage of oxygen in the flue gas should be between 6% and 9%. Ideally, the percentage of oxygen is 7.5%. This is true for both noncondensing and condensing furnaces.

Bacharach, Inc.

Figure 41-7. A combustion analyzer capable of measuring a number of variables when its sensor is placed in a furnace's flue.

Carbon Monoxide (CO) Content

The presence of carbon monoxide in flue gas is a direct measure of the quality of combustion. Excessive carbon monoxide production indicates that there is incomplete combustion. According to the American National Standards Institute (ANSI), the maximum concentration of carbon monoxide permitted in furnace flue gas is 400 parts per million (ppm). However, many manufacturers specify that a concentration greater than 50 ppm indicates a problem.

Although the correct percentage of carbon dioxide (or oxygen) in flue gas is vital for determining combustion efficiency, the correct percentage only indicates complete combustion if there is no carbon monoxide being produced. For example, in a natural gas furnace, the flue gas can have a carbon dioxide content of 6.7%, an oxygen content of 9%, and a carbon monoxide content of 200 ppm. These values are all relatively close to the desired values. However, since the carbon dioxide content is low and the oxygen content is high, the presence of carbon monoxide is most likely an indication that there is too much excess air. Too much excess air decreases the flame temperature and allows some carbon monoxide molecules to pass through the combustion zone without burning. On the other hand, if the carbon dioxide content is high and the oxygen content is low, the presence of carbon monoxide may indicate that there is a lack of air to mix with the fuel, **Figure 41-8**.

Gas Pressure

Gas pressure is another factor that can affect a furnace's combustion efficiency and cause the production of carbon monoxide. An increase in gas pressure can cause incomplete combustion due to a lack of air to mix with the increased amount of gas. Thus, increased gas pressure leads to similar conditions as a lack of air: high carbon dioxide content and low oxygen content in

Acceptable Amounts of Combustion Products in Flue Gas

Combustion Product	Natural Gas	LP Gas
CO_2	7.6%	8.9%
O_2	6–9% (ideally 7.5%)	6–9% (ideally 7.5%)
CO	Less than 50 ppm	Less than 50 ppm

Goodheart-Willcox Publisher

Figure 41-8. Range of desirable measurements for a combustion analyzer.

Copyright Goodheart-Willcox Co., Inc.

the flue gas. A decrease in gas pressure decreases the flame temperature and leads to similar conditions as too much excess air: low carbon dioxide content and high oxygen content in the flue gas.

Since both the amount of excess air and the gas pressure produce similar variations in carbon dioxide content and oxygen content, a technician must check the gas pressure to make sure that it is not the cause of the problem. Gas pressure is checked at the gas valve manifold using a manometer, **Figure 41-9**.

Gas pressure to a gas-fired furnace is usually very low, so it is measured in inches of water column (in. WC). Inches of water column are used to measure small pressures above or below atmospheric pressure. About 28 in. WC equals only 1 psi. The gas pressure for natural gas should be 3.5 in. WC, and the gas pressure for LP gas should be 10.5 in. WC.

York International Corp.

Figure 41-9. A manometer is connected to a pressure tap on the gas valve to measure the pressure of gas entering the manifold.

Stack Temperature

Stack temperature, also called *net stack temperature*, is the temperature of the flue gas in the flue minus the temperature of the combustion air. When combustion air enters from the furnace room at room temperature, stack temperature is essentially flue gas temperature minus room temperature. When combustion air is drawn in from outside, the temperature is colder.

Flue Gas Temperature
− Combustion Air Temperature
Stack Temperature

Stack temperature is directly related to the amount of excess air and inversely related to a furnace's efficiency. As excess air increases, a furnace's stack temperature also increases, and the furnace's efficiency decreases. This is because the increased excess air carries more heat through the flue to the outdoors. The result is an increased stack temperature, which indicates that less heat is being transferred in the heat exchanger to the air circulated through the ductwork. Less excess air and lower stack temperature result in more efficient furnace combustion, **Figure 41-10**.

In general, there is about a 1% decrease in efficiency for every 40°F increase in stack temperature. The stack temperature in noncondensing furnaces should be between 325°F and 500°F (163°C and 260°C). For condensing furnaces, the stack temperature should be less than 140°F (60°C).

41.3 Gas Valves

In older furnaces, a gas valve was a simple solenoid valve that controlled the supply of gas to the manifold and burners. A separate pressure regulator set the gas pressure for the furnace. One solenoid valve controlled gas supply to the pilot, and another solenoid valve controlled gas supply to the burners. Over time, these components

11

Combustion Efficiency (%)						
Excess (%)		Net Stack Temperature (°F)				
Air	Oxygen	200	300	400	500	600
9.5	2.0	85.4	83.1	80.8	78.4	76.0
15.0	3.0	85.2	82.8	80.4	77.9	75.4
28.1	5.0	84.7	82.1	79.5	76.7	74.0
44.9	7.0	84.1	81.2	78.2	75.2	72.1
81.6	10.0	82.8	79.3	75.6	71.9	68.2

Goodheart-Willcox Publisher

Figure 41-10. Combustion efficiency decreases as the amount of excess air and the net stack temperature increase.

Copyright Goodheart-Willcox Co., Inc.

have been combined into a single gas valve to adapt to changing functions within gas furnaces. A single gas valve—containing features such as a manual shutoff valve, multiple solenoid valves, a pressure regulator, and adjustment and safety shutoff for the pilot—is called a ***combination gas valve***, **Figure 41-11**.

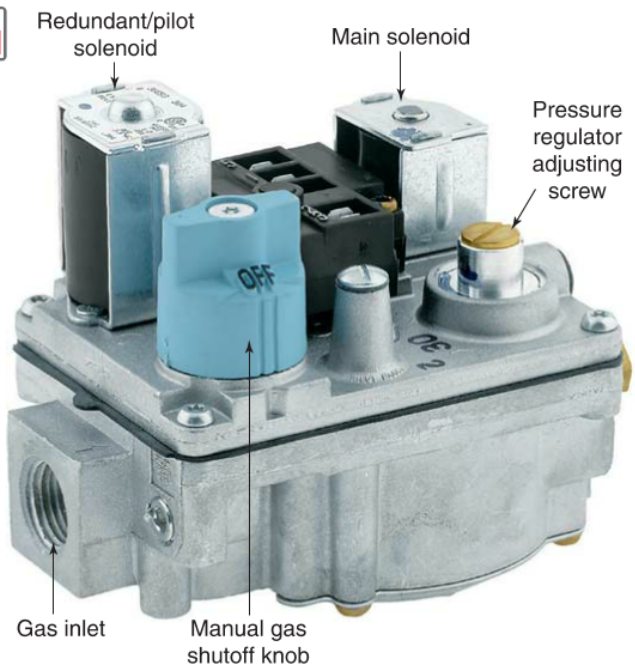

Emerson Climate Technologies

Figure 41-11. A combination gas valve combines the functions of multiple solenoid valves with a pressure regulator.

While a combination gas valve has a manual shutoff valve to control gas flow, gas flow is typically controlled by a thermostat's signal to the gas valve. In older furnaces with pilot ignition systems, one solenoid valve in the gas valve opens for the pilot when the thermostat calls for heat. Once safety controls have verified that the pilot is lit, a second solenoid valve in the gas valve opens for the burners to ignite. After gas flows through the gas valve, it is distributed to individual burners by a manifold. See **Figure 41-12**.

Pro Tip

LP Gas Pressure Regulators

Natural gas furnaces usually have a pressure regulator built into the gas valve. However, LP gas furnaces often have a pressure regulator that is separate from the gas valve.

41.4 Gas Burners

A ***gas burner*** is a device that mixes primary air and fuel gas from a manifold to burn a flame aimed into a furnace's heat exchanger. Gas combustion occurs at a furnace's gas burners.

Gas burners have a simple design. Gas is carried to the burner assembly through a pipe with multiple openings, called a ***gas manifold***. Gas manifolds have small sockets into which spuds are installed. ***Spuds*** are burner attachments with specially sized orifices that direct an exact amount of gas into the gas burner. They are typically threaded into the gas manifold, **Figure 41-13**.

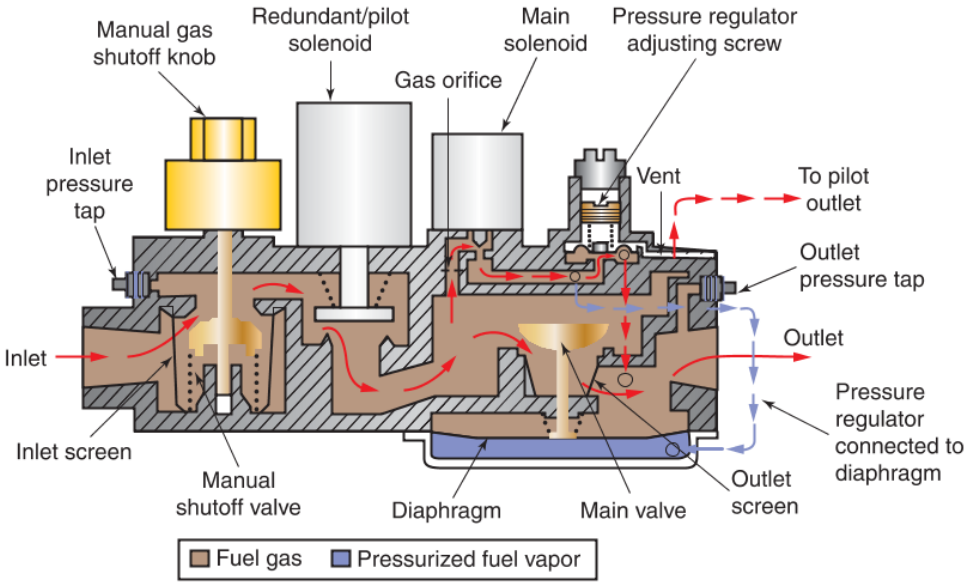

White-Rodgers Division, Emerson Climate Technologies

Figure 41-12. Cutaway showing gas flow through a combination gas valve used with a standing-pilot ignition system.

Copyright Goodheart-Willcox Co., Inc.

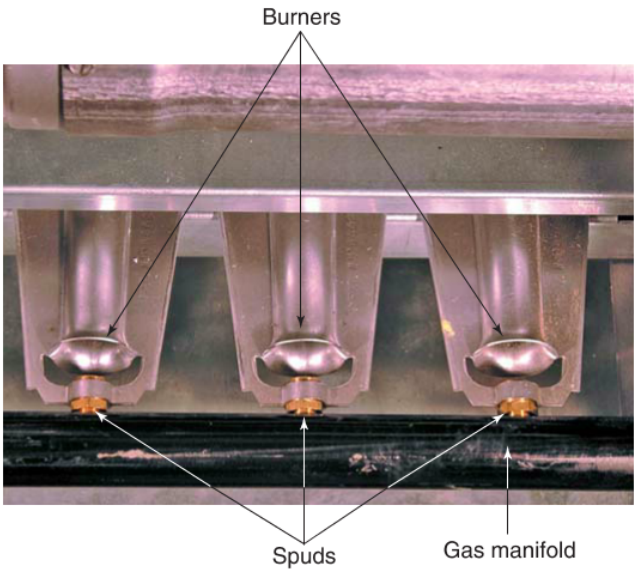

York International Corp.

Figure 41-13. Spuds are typically threaded into the gas manifold and are replaceable.

Gas mixed with a certain amount of primary air is fed through the orifice in the spud. This mixture passes to the burner where combustion takes place and the burning gas mixes with the secondary air.

Caution

Spud Orifice Size

The rate of gas flow through the orifice in a spud depends on the gas pressure and the specific gravity of the gas. At equal pressure, less LP gas will flow through an orifice than natural gas because LP gas is heavier. As a result, when converting a natural gas furnace to an LP gas furnace, remove and replace the spuds with a different orifice size for the different flow necessary for LP gas.

Gas burners are used in forced-air furnaces, unit heaters, and boilers for hydronic systems. They ensure the proper mixture of primary air and gas, so it can be readily ignited and burned. There are two types of gas burners:

- Atmospheric burners.
- Power burners.

41.4.1 Atmospheric Gas Burners

An ***atmospheric gas burner*** uses the siphoning action of gas flow through the orifice to induce airflow through the burner without the need for a blower. Atmospheric gas burners are usually constructed of steel and may be of varying lengths and sizes. Gas burners in older furnaces have primary air shutters that can be adjusted to regulate the amount of primary air that is added to the mixture, **Figure 41-14**. Newer furnaces no longer have adjustable air shutters.

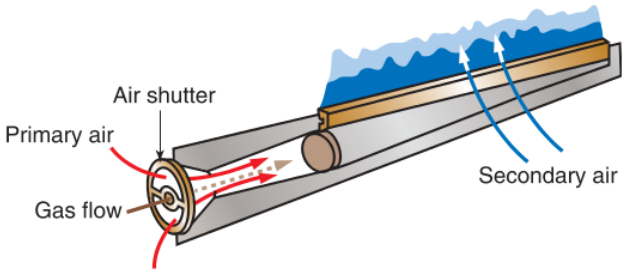

Goodheart-Willcox Publisher

Figure 41-14. An air shutter controls the amount of primary air that is mixed with the fuel gas prior to ignition.

The bodies of atmospheric gas burners have an hourglass shape. They are narrower in the center and wider at the two ends. The narrower section of the burner produces a ***venturi effect***, which is the reduction in pressure that occurs when a fluid flows through a constricted section of pipe. As gas enters an atmospheric gas burner, it must speed up as it passes through the narrow area. This creates a low pressure, which draws in air from the primary air shutter. The primary air mixes with the fuel gas as they pass through the narrow, constricted center of the gas burner. The venturi effect produced by the narrow passage also causes the fuel gas and air to swirl into a mixture.

There are three different styles of atmospheric gas burners: ribbon, slotted, and single port. These three styles are classified by how the fuel gas and air are fed into the flame. ***Ribbon burners*** feed the fuel gas and primary air mixture along the length of a burner producing a solid flame on top. ***Slotted burners*** feed a mixture of fuel gas and primary air through a series of narrow slots, **Figure 41-15**.

Single-port burners can be manufactured in a variety of patterns to meet specific design needs. The most efficient single-port burner is the ***inshot burner***. An inshot burner directs the mixture of air and fuel gas through a large orifice to produce a large flame that is directed into the heat exchanger, **Figure 41-16**. Due to efficiency and the design of heat exchangers, most new furnaces use inshot burners.

Pro Tip

Gas Furnace Capacity and Altitude

As altitude increases, the capacity of a furnace decreases because there is less air and, as a result, less oxygen. To compensate for less oxygen, a smaller orifice must be used in a gas burner so that less fuel is fed through the orifice. A burner orifice correction must be made when at altitudes over 2000′ (610 m).

Copyright Goodheart-Willcox Co., Inc.

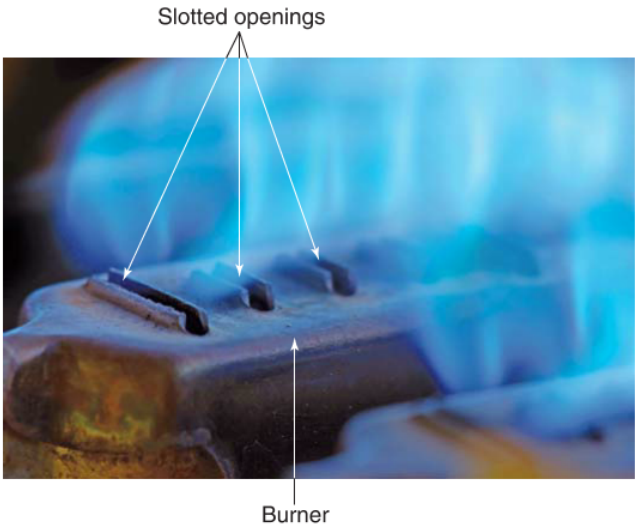

Nomad_Soul/Shutterstock.com

Figure 41-15. A slotted burner.

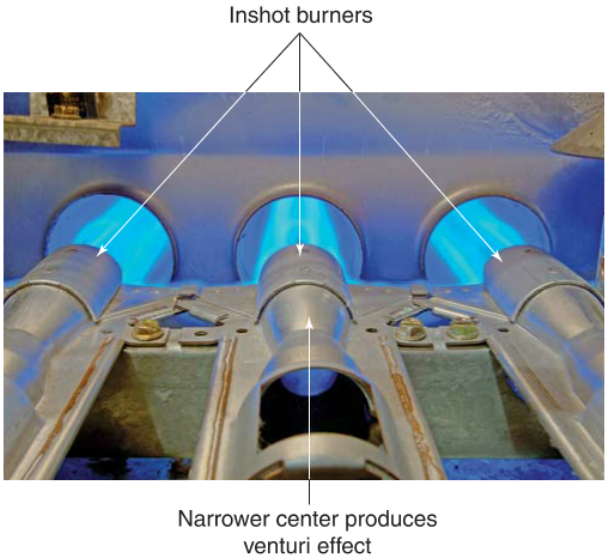

Carolina K. Smith MD/Shutterstock.com

Figure 41-16. Inshot burner flames aimed into a heat exchanger.

41.4.2 Power Burners

A ***power burner*** is a type of gas burner that uses a blower to force both primary and secondary air into the burner tube. The burner tube has angular deflector plates to spin or twirl the flame for more efficient burning, **Figure 41-17**.

A spark igniter or glow coil is used for igniting the flame. Power burners are not common in residential gas furnaces. Most are found in larger commercial or industrial applications. The use of fuel oil requires a power burner. Power burners are able to achieve higher burning efficiency due to their ability to better control the ratio of fuel to air.

41.5 Ignition Systems

The purpose of an ***ignition system*** is to light a burner safely and monitor for continued safe operation. An ignition system is controlled by a furnace's ignition control module. There are four types of ignition systems used in gas furnaces:

- Standing-pilot ignition.
- Intermittent-pilot ignition.
- Direct-spark ignition.
- Hot-surface ignition.

41.5.1 Standing-Pilot Ignition System

A ***pilot light***, or *pilot flame*, is a small flame located near a furnace's gas burners that provides the initial heat to ignite the furnace. A ***standing-pilot ignition system*** consists of a continuously burning pilot that ignites the burners when there is a call for heat. Wired to the ignition control module, a thermocouple, thermopile, or bimetallic element senses if the pilot is correctly lit prior to allowing the main gas valve to open during a call for heat, **Figure 41-18**.

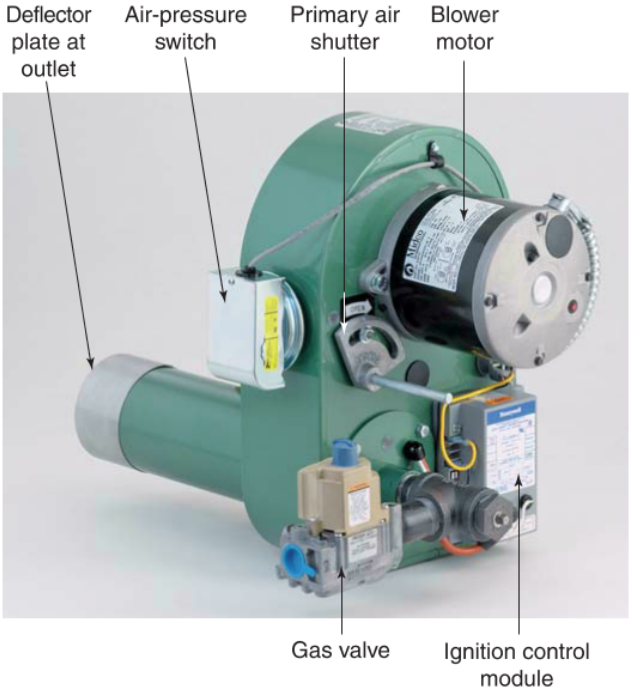

Midco International, Inc.

Figure 41-17. A power burner forces primary and secondary air through a passage with fuel gas.

Copyright Goodheart-Willcox Co., Inc.

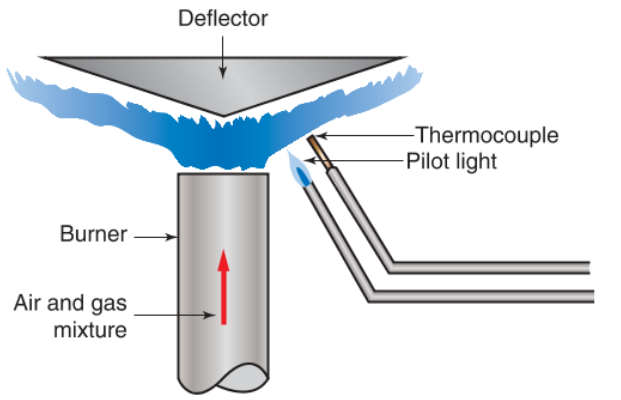

Goodheart-Willcox Publisher

Figure 41-18. The setup of a standing-pilot ignition system for a gas furnace. Notice how the pilot light is positioned to constantly provide heat for the thermocouple to sense and for the burner to ignite.

A thermocouple generates a small electric current, which rises or falls based on the amount of heat applied to it. When the pilot is lit, the thermocouple sends a signal that tells the ignition control module to send fuel gas through the gas burner. If the pilot is not lit, the thermocouple sends a signal to the control module to prevent the flow of fuel gas through the gas burner. A system that uses a thermocouple, thermopile, or bimetallic element to sense if a pilot light is on is referred to as a ***thermal detection system***. More information on thermocouples and thermopiles is found in Chapter 14, *Basic Electronics*.

Thinking Green

Standing Pilots

Standing-pilot ignition systems are found only in older furnaces. Since a standing pilot constantly burns gas, even during the Off cycle, standing-pilot ignition systems have become obsolete due to their inefficiency. The majority of gas furnaces now use more efficient options, such as intermittent pilots, direct-spark ignition, or hot-surface ignition.

Safety Note

LP Gas

If a pilot fails to light on a furnace that burns natural gas, the gas will rise through the flue and vent outdoors since natural gas is lighter than air. However, LP gas is heavier than air. If an LP gas pilot fails to light, the gas can collect in a low area, such as a crawlspace or basement. This creates pockets of highly explosive gas and can cause suffocation in a crawlspace due to lack of air. If an odor is detected, the gas is present.

41.5.2 Intermittent-Pilot Ignition System

An ***intermittent-pilot ignition system*** burns and monitors its pilot light only while the thermostat is calling for heat. When the furnace is off, the pilot is not lit, and the ignition control module does not attempt to sense the pilot. When the thermostat calls for heat, the gas valve for the pilot opens, and a spark igniter or hot-surface igniter attempts to ignite the pilot flame. The ignition control module also begins trying to sense the flame using a flame detection device.

Once the pilot has been started and detected, the ignition control module opens the gas valve to the gas burners. The gas burners are ignited by the pilot light, producing heat to warm the conditioned space. When the thermostat no longer calls for heat, the gas valve closes (lockout), stopping gas flow to the pilot and gas burners. Natural gas systems may be 100% lockout, but LP gas systems must be 100% lockout.

Intermittent-pilot ignition systems require verification that the pilot has been lit before gas can flow to the burners. The ignition control module uses flame rectification or thermal detection to verify the presence of the pilot flame. ***Flame rectification*** is the process of using a pilot flame or gas burner flame to change a small electric current from alternating current to direct current.

The flame burns between two electrodes of different sizes. These electrodes can be a grounding strap, flame hood, flame rod (flame sensor), or part of a gas burner. The flame allows electrons to flow in only one direction across the gap between the electrodes. The ignition control module then applies a small alternating current to the electrodes. The flame rectifies this current by forcing it to flow in only one direction across the gap. The control module measures the direct current to verify the presence or absence of a pilot flame. Flame rectification systems report the presence of a flame immediately. Other ignition systems may use local sensing, which consists of a combination igniter/sensor.

Pro Tip

Flame Rod

Flame rod is the most widely used name for a device that is known by several names in the HVACR industry. Other names that you may encounter in the field include *ionization electrode* and *flame electrode*.

41.5.3 Direct-Spark Ignition (DSI) System

A ***direct-spark ignition (DSI) system*** uses an electric spark to ignite gas burners. No pilot is used in this system. A ***spark igniter*** creates an electric spark across a gap between two electrodes when the ignition

Copyright Goodheart-Willcox Co., Inc.

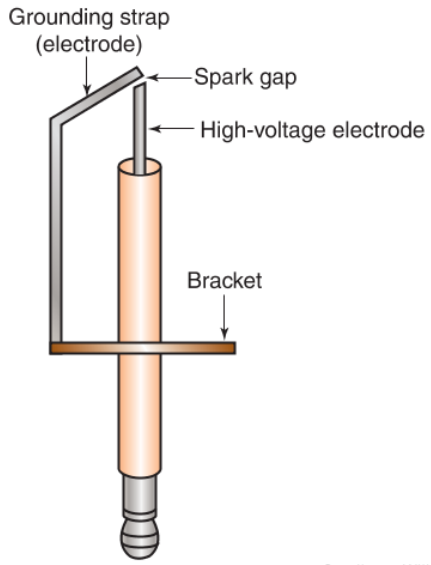

Goodheart-Willcox Publisher

Figure 41-19. The components of a direct-spark ignition assembly. Some DSI systems use the same components to both ignite the flame and detect the flame.

control module applies a high voltage to the electrodes. The spark occurs when current leaps across the gap. This spark is hot enough to ignite the fuel gas in the gas burners, **Figure 41-19**.

When a thermostat calls for heat, several things happen. The gas valve opens to allow fuel gas to flow through the manifold to the furnace's gas burners. Also, the furnace's ignition control module applies a voltage to the electrodes to produce a spark. When the spark arcs across the electrodes, it ignites the gas flowing through the gas burners. The flame produced is then detected by sensors, and the gas furnace heats air that is circulated to the conditioned space.

If a flame is not produced or if the sensors do not detect a flame, the system locks out for a given period of time. All DSI systems (natural gas or LP) provide a lockout function, which stops the system from applying an ignition spark. Like intermittent-pilot ignition systems, DSI systems incorporate flame rectification as a means of flame detection.

Direct-spark ignition systems may have components that are designed to serve two purposes. For instance, DSI systems require both a high-voltage electrode and grounding strap to start the spark and a flame rod and grounding strap to conduct current for flame rectification. Some systems combine the high-voltage electrode and flame rod into a single device. When a system's electrode and flame rod are packaged together, it is known as ***local sensing***. When a system has an electrode for starting the spark and a separate flame rod for detecting the flame, it is known as ***remote sensing***.

Direct-spark ignition systems have the advantage of inexpensive parts, rugged design, long operating life, and low maintenance. A disadvantage is that the sparks create ***electromagnetic interference (EMI)***, or electrical noise. EMI can disrupt electronics, such as the ignition control module on the furnace itself. To minimize EMI disruptions, keep electrical cables as short as possible and avoid allowing the high-voltage wire to cross in front of the ignition control module.

41.5.4 Hot-Surface Ignition (HSI) System

A ***hot-surface ignition (HSI) system*** uses a silicon carbide igniter to light the gas burners directly. No pilot is used. A ***hot-surface igniter*** is a high-resistance heating element that produces a great deal of heat when current passes through. This heat is high enough to ignite fuel gas flowing through a furnace's gas burners. Hot-surface igniters are often called ***glow coils***, referring to how they illuminate when conducting electric current, **Figure 41-20**.

HSI systems operate similarly to DSI systems. When a thermostat calls for heat, the ignition control module starts the combustion blower to purge the heat exchanger. After a brief period of time, a voltage is applied to the glow coil. The combustion blower continues to operate while the glow coil heats up. An HSI

Sealed Unit Parts Co., Inc.

Figure 41-20. A hot-surface igniter made of silicon carbide. As current passes through the igniter, it heats up to glowing hot.

Copyright Goodheart-Willcox Co., Inc.

system's control module waits before turning on fuel gas to the gas burners. Some HSI systems use a timed relay to wait for a set period of time. Other HSI systems measure the resistance of the glow coil to determine whether it is hot enough to ignite fuel gas.

The ignition control module opens the gas valve to supply fuel gas to the burners when the glow coil is hot enough to ignite the gas. Within a few seconds of the gas valve opening, the glow coil should de-energize. If a flame sensor does not detect a flame within a few seconds, the gas valve closes. Some systems attempt to relight the burners for a limited number of times. HSI systems provide a lockout function regardless of whether they are natural gas or LP gas.

Once a flame is detected through flame rectification, the control module starts the indoor blower after a brief delay. This delay allows the heat exchanger to warm up and heat the air circulated to the conditioned space. After the thermostat is satisfied with the temperature, it signals the ignition control module to close the gas valve and then turn off the combustion blower after a brief period of time.

Since an HSI system's glow coil requires only 24 V or 120 V, rather than a DSI system's higher voltage, no EMI is produced. HSI systems are also ideal for equipment with high gas flow. However, hot-surface igniters cost more than spark igniters and take longer to ignite a gas burner flame. Also, glow coils are very fragile, sensitive to shock and vibration, and easily broken. While DSI systems can use their high-voltage electrode for both ignition and flame sensing, HSI systems require a flame rod for flame sensing.

41.6 Gas Furnace Controls

Gas furnaces have controls to ensure safe start-up and safe operation of the gas burners. A furnace's operation is primarily controlled by an HVAC system thermostat and an ignition control module, both of which are wired to the gas valve. See **Figure 41-21**.

On a call for heat, the thermostat sends a signal to the ignition control module to open the gas valve to allow gas flow to the burners. However, before the ignition control module opens the gas valve, it initiates a start-up sequence to prevent the system from functioning unless all proper operating conditions are met.

An ignition control module monitors a series of safety or limit controls that act as electric interlocks. ***Electric interlocks*** are safety devices that prevent operation of certain devices unless certain conditions are met. In the case of a gas furnace, electric interlocks prevent the ignition control module from opening the gas valve or turning on the indoor blower until conditions are safe. Once the desired conditions are met,

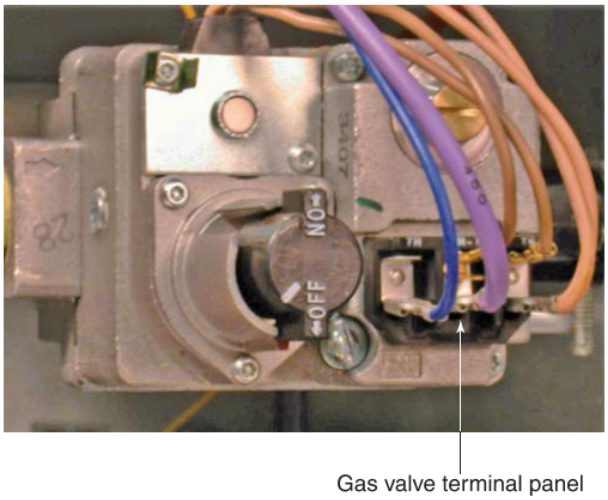

Gas Valve

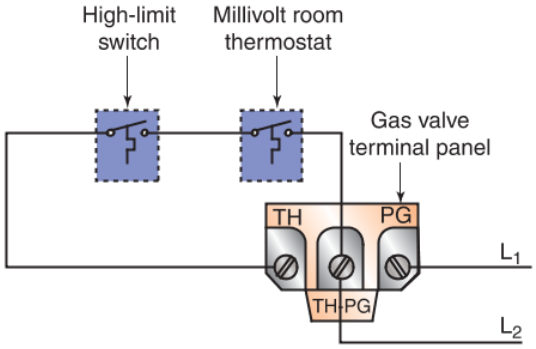

Millivolt Circuit

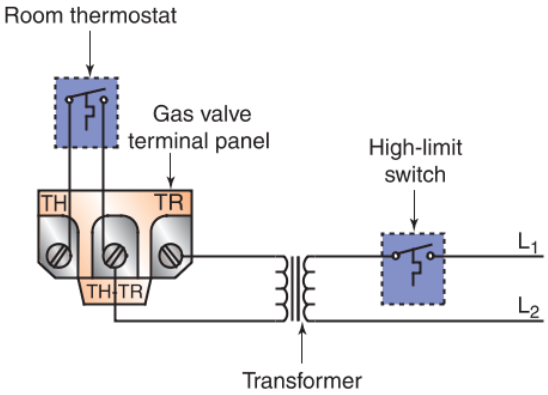

24 V Circuit

York International Corp.; Goodheart-Willcox Publisher

Figure 41-21. A system thermostat and ignition control module are wired to the gas valve at the gas valve terminal panel. Both millivolt and 24 V circuits can be used to control the gas valve. A high-limit switch is one example of an electric interlock that must be closed before the ignition control module continues with ignition.

Copyright Goodheart-Willcox Co., Inc.

current can flow through the circuit to open the gas valve or to close a relay that turns on the indoor blower to distribute conditioned air.

41.6.1 Ignition Control Modules

An ignition control module functions as the "brain" of a gas furnace and continuously monitors the furnace during start-up and operation. The start-up sequence begins when the ignition control module receives a call for heat from the thermostat. The ignition control module activates the combustion blower for approximately 15 seconds to clear the furnace plenum of residual combustion gases. It then sends a signal to open the gas valve and ignite the burners.

During operation, the ignition control module senses heat from the burner flame through the use of a flame rod. When the flame rod is heated by the burner, it sends a microamp signal back to the control module, which indicates that the burner is on. If the ignition control module does not receive the signal that a flame is present, it shuts off the gas valve to prevent the buildup of gas in the furnace, **Figure 41-22**.

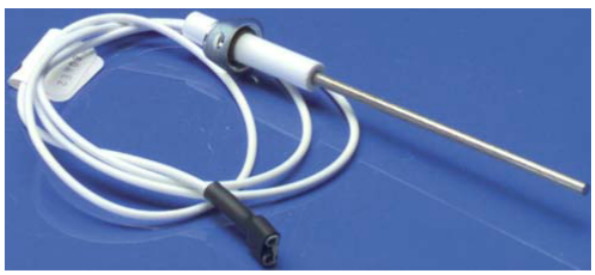

Flame Rod

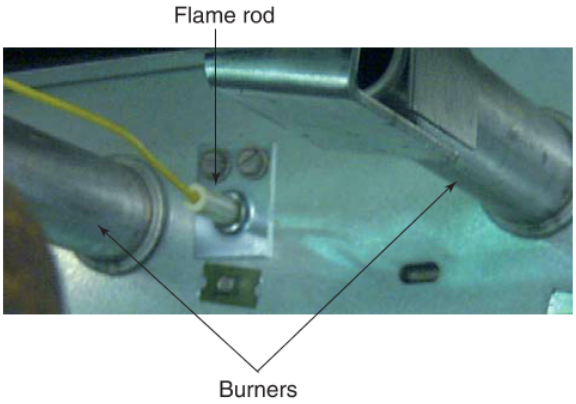

Flame Rod Installed

Emerson Climate Technologies; York International Corp.

Figure 41-22. A flame rod senses heat from an active burner flame and sends a microamp signal back to the ignition control module confirming that the burner flame is on.

Types of Ignition Control Modules

There are two types of ignition control modules currently available: nonintegrated and integrated. A ***nonintegrated ignition control module*** can open and close a gas valve, control a spark or hot-surface igniter, and monitor the interlocks. This type of ignition control module is found primarily in older, less-efficient furnaces. An ***integrated ignition control module*** is a control module that uses advanced electronics to provide greater control and functionality than a nonintegrated control module, **Figure 41-23**.

An integrated ignition control module's additional functionality includes the ability to perform self-diagnostics. If a problem occurs, the control module uses an LED to indicate a trouble code. Some integrated ignition control modules are able to vary (modulate) the burner flame size. This type of ignition control module is used in conjunction with an electronic thermostat, a variable speed blower, and a modulating gas valve.

Burner flame size is regulated based on the temperature difference between the thermostat set point and the room temperature. The greater the temperature difference is, the larger the flame. As room temperature approaches the thermostat set point temperature, the flame size is reduced. The ignition control module initially starts the flame between 20% and 50% of its full capacity and then adjusts the flame size to suit the temperature difference.

Pro Tip

Modulating Furnace Thermostats

On some models of modulating furnaces, the ignition control module controls flame modulation based on an algorithm applied to the previous run time. In other modulating furnaces, special communicating thermostats send modulating signals to the ignition control module. If a standard programmable thermostat is used with one of these furnaces, the furnace will not function as a modulating furnace.

Ignition Control Module Functions

Before a gas furnace's heating cycle can begin, different ignition methods require that different operational and safety sequences be run. Depending on the furnace design, the functions of an ignition control module include some or all of the following operational and safety features:

- Pre-purging.
- Inter-purging.
- Post-purging.
- Gas valve operation.
- Pilot valve operation.

Copyright Goodheart-Willcox Co., Inc.

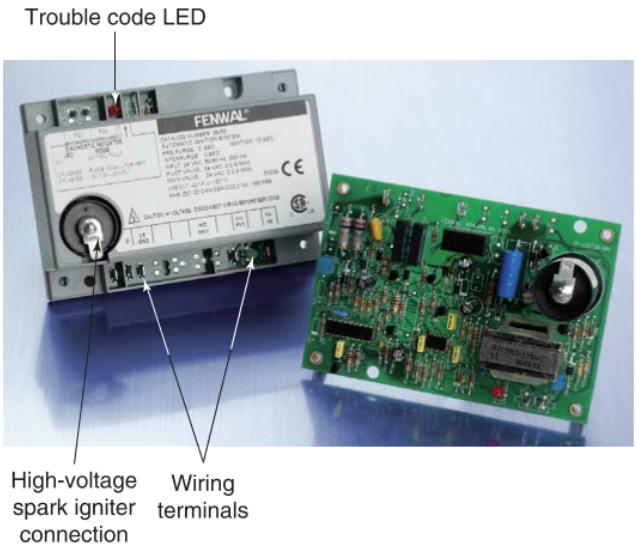

Fenwal Controls

Figure 41-23. An integrated ignition control module used with an intermittent-pilot ignition system.

- Soft lockout.
- Hard lockout.
- Shutoff.
- Trial for ignition (TFI) time.
- Number of ignition attempts.

Purging a gas furnace is accomplished by turning on a combustion blower to vent any remaining combustion gases from the heat exchanger. Before ignition is even tried on a heating cycle, an integrated ignition control module performs a ***pre-purge*** by cycling on the combustion blower to vent any combustion gases remaining in the heat exchanger. This operation empties the heat exchanger of combustion gases and fills it with fresh air to prevent any incomplete combustion or misfires.

Integrated ignition control modules allow igniters a limited amount of time to ignite a gas burner flame. This period of time is called ***trial for ignition (TFI)***. TFI is usually measured in seconds. On some control modules, TFI may be chosen from a group of preprogrammed selections. Refer to manufacturer service information to properly set TFI.

Sometimes an ignition system fails to ignite during its TFI. If the time set for TFI is exceeded, the ignition control module places the furnace in a state of shutoff, also called a *lockout*. An ignition control module with a ***soft lockout*** briefly quits trying to ignite for a specified time before attempting ignition again. After a soft lockout's waiting period, the system automatically tries ignition again. The waiting time of a soft lockout can vary greatly, depending on the module used for a given system and application.

During this brief waiting period between ignition attempts, ignition control modules often inter-purge the furnace. An ***inter-purge*** is when a combustion blower cycles on during a soft lockout to vent any combustion gases remaining in the heat exchanger after a failed ignition attempt.

Some ignition control modules do not allow a soft lockout. If a gas furnace with such a control module misfires, it goes into a hard lockout. A ***hard lockout*** is a system shutdown for an unspecified amount of time after a furnace fails to light during its TFI. A hard lockout requires a service call to reset or interrupt power to the ignition control module.

Even after a furnace runs successfully and goes into the Off cycle, the heat exchanger may still contain some combustion gases. Some ignition control modules initiate a ***post-purge***, in which the combustion blower remains on for a given period of time after gas burner operation has ceased in order to vent any combustion gases in the heat exchanger.

Gas furnaces with pilots typically have shutoff controls. A gas furnace with an ignition control module that has ***100% shutoff*** closes the gas valve and the pilot valve when the flame rod does not detect a flame. With the advent of features such as soft lockout, control modules with 100% shutoff are no longer as prevalent as they once were.

A gas furnace with an ignition control module that has ***non-100% shutoff*** closes the gas valve but not the pilot valve when the flame rod does not detect a flame. Furnaces with non-100% shutoff have shutoff times that are long enough for a dangerous amount of gas to dissipate before attempting to reignite the pilot.

A gas furnace may have an ignition control module with ***100% shutoff with continuous retry***. For these systems, the gas valve and pilot valve close when the flame rod does not detect a flame. However, after a waiting period, the control module attempts to reignite the pilot. The system cycles between attempting to reignite the pilot and waiting during shutoff periods until the pilot is lit.

Ignition Control Module Wiring

Wiring terminal abbreviations for ignition control modules vary with manufacturers. Always refer to an installation manual. However, some commonly used abbreviations include the following:

- GV, MV, or V1—main gas valve.
- PV—pilot valve.
- MV/PV—combined main gas valve and pilot valve.

Copyright Goodheart-Willcox Co., Inc.

- GND, BRN GND, or GND Burner—burner ground connection.
- 24 V GND (or 25 V)—unswitched leg of the secondary transformer.
- 24 V (or 25 V)—switched leg of the secondary transformer.
- TH or TH-W—thermostat heat signal.
- SENSE or REMOTE SENSE—flame sensor.
- SPARK or IGN COIL—spark igniter or combined spark igniter and flame sensor.
- FS—flame sensor.
- IGN—hot-surface igniter.
- P1—vent damper control.
- PSW—pressure switch.
- IND—combustion blower.

41.6.2 Safety Controls

The high temperatures in a gas furnace can cause damage to the furnace itself. The sheet metal chamber where heat collects before being distributed is called the ***bonnet***. It contains the heat exchanger. If a blower fan does not operate when it should, the heat exchanger can overheat. To prevent such occurrences, a ***high-limit switch***, also called a *safety stat*, is placed in the bonnet near the heat exchanger to protect the heat exchanger from overheating. One example of a high-limit switch is a bimetallic snap disc, **Figure 41-24**. If the heat around the heat exchanger rises too high, such as when a blower fan does not run during burner operation, the high-limit switch snaps open to de-energize the gas valve and stop the flow of fuel gas to the gas burners. Most of the time, a high-limit switch automatically resets once conditions are safe again.

For various reasons, flames in a gas furnace are not always contained as well as they should be. If a spud or gas burner is misaligned or there is a draft problem, part of the flame may spill backward out of the burner, which is called ***flame rollout***. Flame rollout can be caused by a cracked heat exchanger, rust on burners, poor draft, or incorrect flue pipe height. A safety device that monitors for flame rollout is a ***rollout switch***. This device is located near the burners. If a flame rollout occurs, a rollout switch cuts off the supply of fuel gas by opening the circuit controlling the gas valve to close it, **Figure 41-25**.

Pro Tip

Resetting a Rollout Switch

Rollout switches must be reset manually. However, these switches should not be reset simply to return a furnace to operation again. A tripped rollout switch indicates that something is wrong and needs to be corrected. Always investigate to find the root cause of a tripped rollout switch.

41.6.3 Combustion Blower Controls

The burning of fuel gas results in the production of carbon dioxide and water vapor if the combustion

High-Limit Switch

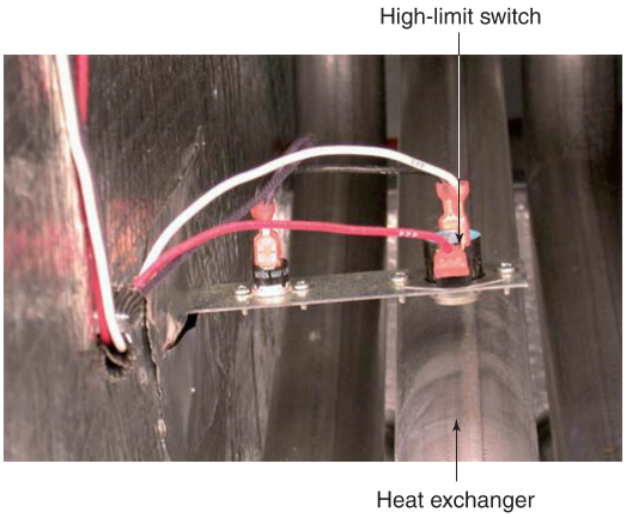

High-Limit Switch Installed

White-Rodgers Division, Emerson Climate Technologies; York International Corp.

Figure 41-24. One type of high-limit switch is a bimetallic snap disc. It is installed above the heat exchanger to monitor temperature in the bonnet.

Copyright Goodheart-Willcox Co., Inc.

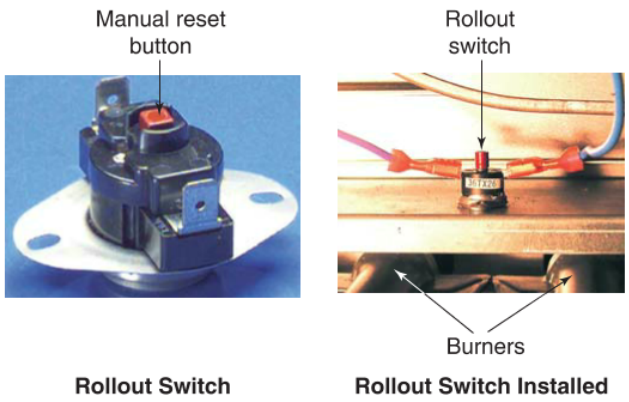

White-Rodgers Division, Emerson Climate Technologies; York International Corp.

Figure 41-25. A rollout switch is installed just outside of the burner area. It shuts off the supply of gas if a flame is detected outside the burner.

is complete and clean. To ensure that the products of combustion flow through the flue into the chimney and not into the conditioned space, combustion blowers are used. A furnace's combustion blower performs two important functions: it pre-purges the heat exchanger and exhausts flue gases.

The ignition control module must verify that the combustion blower is on and has established a steady draft before it signals the gas valve to provide gas to the burners. The device used to detect combustion blower operation may be a sail switch, an end switch, or a pressure switch. A ***sail switch*** is a type of flow switch that uses a large paddle to catch a draft to open or close its contacts. It can be manufactured as a single-pole, single-throw (SPST) switch or as other configurations as well. Sail switches are also called *vane switches* or *airflow switches*.

End switches come in a variety of forms, but in forced-air furnaces, they often connect to the end of a damper motor shaft. When the damper is turned open a certain amount or angle, the end switch closes. This allows the end switch to send a signal to the ignition control module to open the gas valve for combustion to begin. End switches may also be used to signal the control module to turn on the combustion blower. Some end switches are a type of mercury switch, similar to those found in older thermostats.

Different types of ***pressure switches*** may also be used for confirming combustion blower operation. Since an induced-draft combustion blower pulls the products of combustion through the heat exchanger to exhaust them, it creates a negative pressure in the heat exchanger. A pressure switch uses a diaphragm that is sensitive to differences in pressure to compare pressure on each side of the combustion blower, **Figure 41-26**. Negative pressure pulls and positive pressure pushes the diaphragm to actuate the switch.

41.7 Gas Furnace Efficiency

The measurement of gas furnace efficiency is the ***annual fuel utilization efficiency (AFUE) rating***. AFUE is used for all furnaces, including gas, oil, and electric. This rating compares a furnace's yearly or seasonal energy output to the energy input for the same time period. The higher the AFUE rating, the more efficient and cost-effective a furnace is. A furnace's AFUE rating is printed on a label attached to the furnace, **Figure 41-27**.

ANSI/ASHRAE Standard 103 designates the efficiency testing methods for determining a furnace's AFUE rating. Federal law requires a minimum efficiency of 78% AFUE for all new furnaces. The higher the efficiency of a gas furnace, the more likely it is that condensation will develop in the furnace's heat exchanger or flue vent. Gas furnaces rated over 83% AFUE develop condensation, while those at or below 83% AFUE do not develop condensation.

Increased efficiency is accomplished through the use of new technologies, such as high-transfer heat exchangers, design improvements in flue pipe routing, and secondary heat exchangers. Higher efficiency is achieved by keeping more heat in a system, which is done by drawing more heat from combustion and the

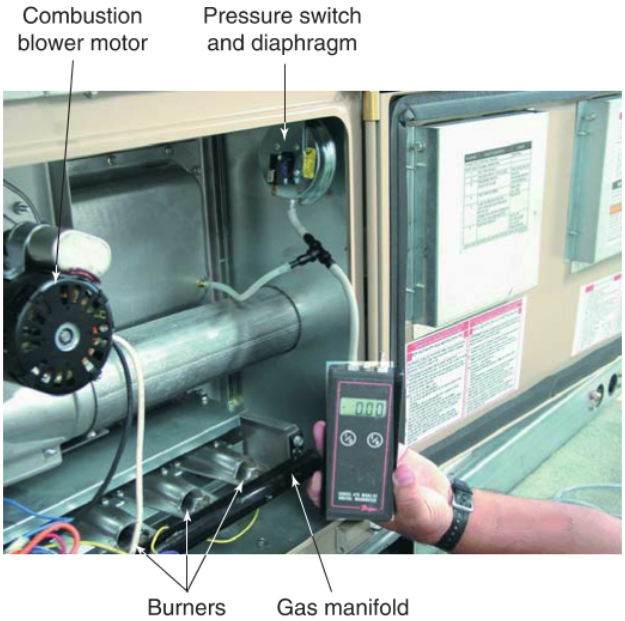

York International Corp.

Figure 41-26. Testing a pressure switch with a digital manometer.

Copyright Goodheart-Willcox Co., Inc.

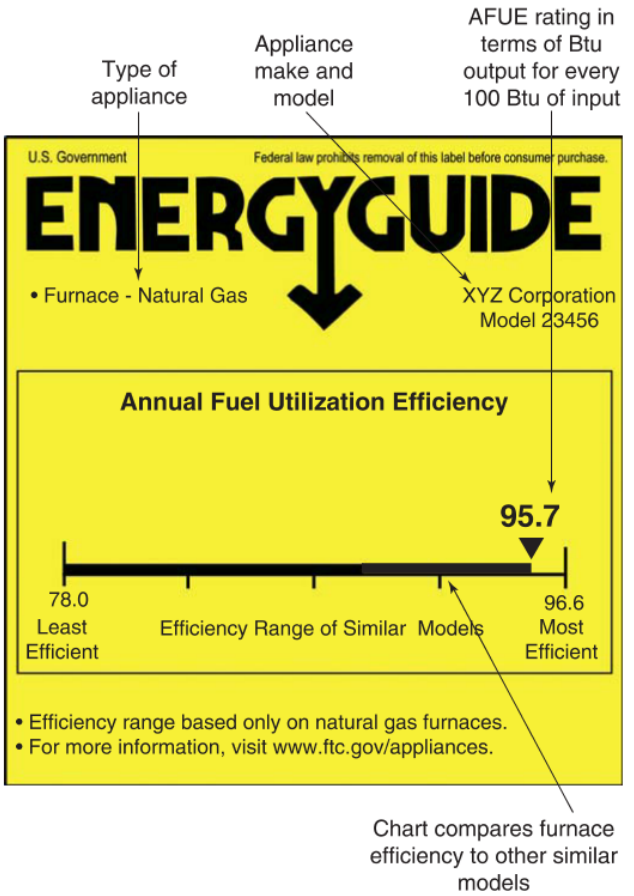

United States Federal Trade Commission

Figure 41-27. An EnergyGuide label shows important information about a furnace, including its make, model, size, and AFUE rating compared to other similar furnaces. In Canada, AFUE ratings are found on EnerGuide labels.

products of combustion. This reduces flue gas temperature and allows escaping flue gas to condense more easily. Since condensation can cause system problems, additional design features and parts are required to protect furnaces that allow condensation formation. The condensate must be allowed to flow freely to an approved drain.

Gas furnace efficiency can be divided into three general categories: low-efficiency, mid-efficiency, and high-efficiency. Older gas furnaces have low efficiency ratings, ranging from 68% to 72% AFUE. Flue gases are vented by natural convection. Since these gases are so hot, they naturally rise through flue piping. Of course, much of the heat created by older, low-efficiency furnaces is lost in these naturally rising flue gases. Low-efficiency furnaces also have standing pilot lights that burn fuel continuously and heat exchangers that are large and heavy.

Thinking Green

Tax Credits

Familiarize yourself with all available tax credits for energy-efficient HVACR equipment. Making the customer aware of an available tax credit may make the difference between the customer purchasing more expensive high-efficiency equipment or lower-efficiency equipment that has a lower initial cost.

41.7.1 Mid-Efficiency Gas Furnaces

A ***mid-efficiency gas furnace*** is a furnace with an AFUE range of approximately 79% to 83%. This type of furnace uses a heat exchanger capable of high heat transfer, a spark igniter instead of a standing pilot, and an induced-draft combustion blower, **Figure 41-28**. These features help increase the AFUE rating. Most mid-efficiency furnaces have a flue gas outlet of only three inches. This is due to the heat exchanger design and the decrease in the products of combustion.

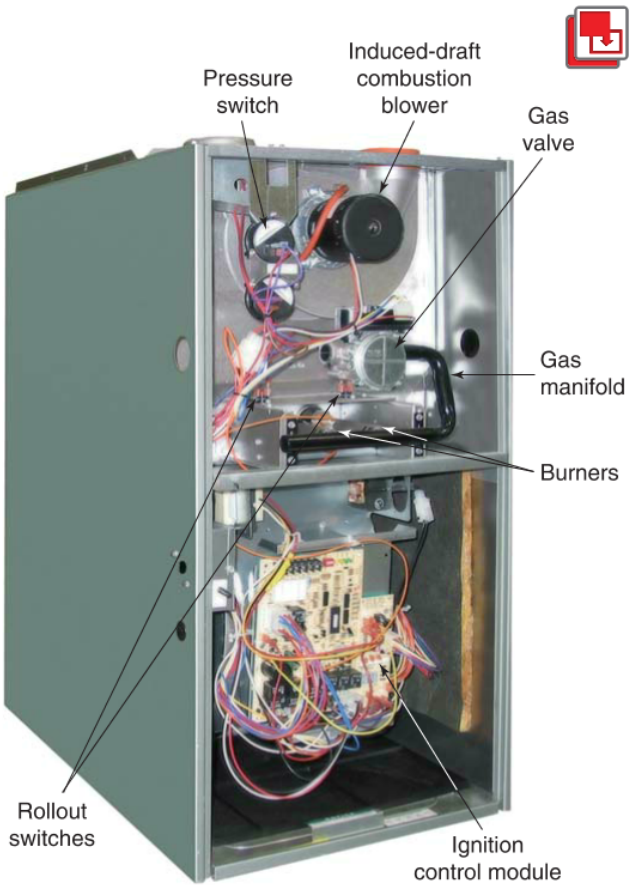

Goodman Manufacturing Company

Figure 41-28. A mid-efficiency gas furnace with an 80% AFUE. Most mid-efficiency furnaces have burners located at the bottom of the heat exchanger.

Copyright Goodheart-Willcox Co., Inc.

Mid-efficiency furnaces may use a Class B chimney or an approved flex chimney liner as the main chimney. A technician should check with a local municipality's heating inspector when installing a furnace's exhaust vent piping. Some manufacturers have designed their mid-efficiency furnaces to be low profile with the option of being installed either vertically or horizontally. The installation of all furnaces should conform to the recommendations of the manufacturer and to local codes and restrictions.

Mid-efficiency furnaces vary from high-efficiency furnaces in two ways: they have no secondary heat exchanger and they require a chimney for flue gases. While high-efficiency furnaces use plastic pipe to vent their lower-temperature flue gases, mid-efficiency furnaces send hot flue gases directly through the chimney, which means more heat energy is lost in these hot flue gases.

41.7.2 High-Efficiency Gas Furnaces

A ***high-efficiency gas furnace*** is a furnace that has a secondary heat exchanger capable of extracting enough heat from flue gases to cause them to condense into liquid. Since high-efficiency gas furnaces allow some flue gases to condense, they are also often called *condensing furnaces*. These furnaces have an AFUE rating between 90% and 97%. Rising fuel gas prices make high-efficiency models attractive to homeowners.

A high-efficiency gas furnace uses gas burners to heat its primary heat exchanger. A combustion blower draws hot combustion gases through the primary and secondary heat exchangers. In the secondary heat exchanger, the latent heat is captured from the combustion gases as they condense. This latent heat is lost through the chimney in a mid-efficiency gas furnace. In a high-efficiency gas furnace, it is transferred from the secondary heat exchanger to the air circulated to the conditioned space, **Figure 41-29**.

For the best transfer of heat from combustion gases to circulating air, a counterflow design is used. While circulating air flows in one direction around the heat exchanger, combustion gases flow in the other direction. This places the coldest circulating air in contact with the coolest part of the heat exchanger (secondary), and it places the warmest circulating air in contact with the hottest part of the heat exchanger (primary). This design allows maximum heat transfer from the combustion gases to the circulating air. The upflow furnace in **Figure 41-29** demonstrates this design of high-efficiency furnaces.

High-efficiency furnaces do not need a traditional chimney to vent flue gases. Since the latent heat of condensation is captured by the secondary heat exchanger, flue gas temperatures are considerably lower than the flue gas temperatures in less efficient gas furnaces. These lower-temperature flue gases are vented outdoors through a PVC pipe attached to the flue exhaust.

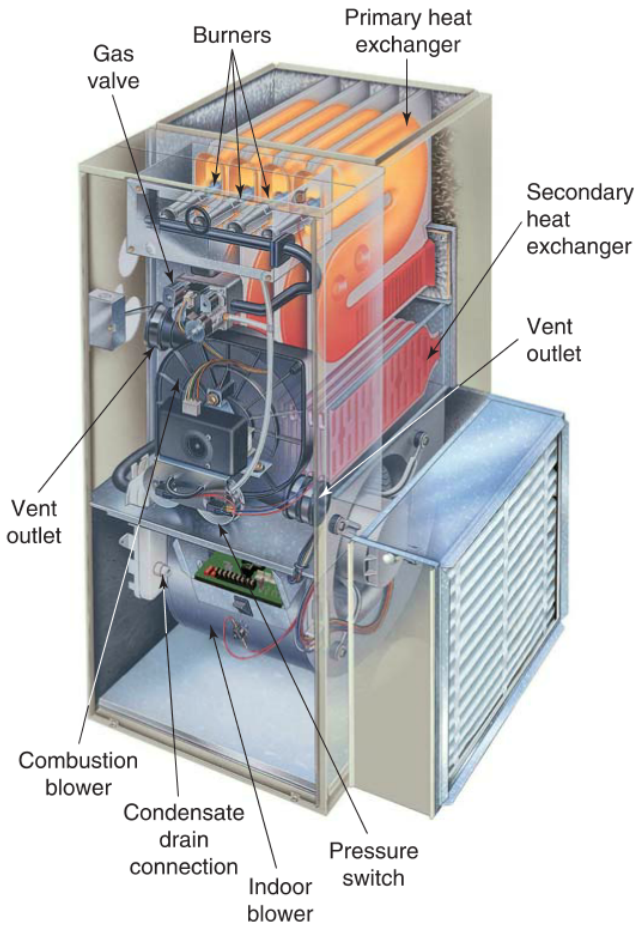

Carrier Corporation, Subsidiary of United Technologies Corp.

Figure 41-29. Components of a high-efficiency gas furnace. Note the combustion blower has vent outlets on both the right and left sides, so vent piping can be installed to either side.

High-efficiency furnaces often have a sealed combustion chamber, which is a box that contains the gas burners and connects to the inlet of the primary heat exchanger. Depending on installation practices and local codes, this allows the owner to choose either ambient air or outdoor air for combustion in the furnace.

Ambient air is simply the air around the furnace. For this option, a technician secures a grille on the air inlet leading to the combustion chamber that allows ambient air to enter the furnace. Using ambient air for furnace combustion is ideal when a furnace is located outside a living space or outside a conditioned space. It is also preferable in locations where it would be difficult to install piping to reach the outdoors.

Copyright Goodheart-Willcox Co., Inc.

Using ambient air for furnace combustion poses a few disadvantages if the furnace is located in the living space or conditioned space of a building. Since air from the conditioned space is consumed and vented during combustion, the building will have a slight negative pressure that will cause some infiltration of outside air. This means cold air from outside will seep into the conditioned space as ambient air is consumed for combustion. Also, the quality of the air in the building may decline.

Homes with more airtight construction want to avoid a negative pressure and anything promoting infiltration. To do this, use outdoor air for furnace combustion. A PVC pipe run from outside to the sealed combustion chamber inlet allows outdoor air to flow into a furnace's combustion chamber through its air inlet. Using outdoor air for combustion avoids consuming any conditioned air. It also avoids creating a negative pressure that promotes infiltration. By having one PVC pipe dedicated to venting flue gases and another PVC pipe dedicated to bringing in fresh air for combustion, a high-efficiency gas furnace does not affect the pressure of the conditioned space. A furnace with a two-pipe system for releasing flue gases and drawing in fresh combustion air is a ***direct-venting system***.

Another benefit of having a pipe dedicated to bringing in fresh outdoor air is that the pipe provides more than enough air for proper combustion. There is no shortage of combustion air or excess air. Increasing the excess air available lowers the dew point of flue gases, and a lower dew point increases the amount of flue gas that condenses. This helps the furnace capture as much heat as possible to transfer to the conditioned space.

41.8 Gas Furnace Venting Categories

How a gas furnace operates influences how it is classified and how it must be vented. The primary determining variables are the temperature and vent pressure of the furnace's flue gas. Based on these variables, a gas furnace is assigned a category number in the *National Fuel Gas Code*, which is a standard published by the International Code Council. See **Figure 41-30**.

A ***Category I furnace*** is a negative-pressure venting, noncondensing furnace. The flue gas temperature is at least 140°F (60°C) (higher than its dew point), so very little condensate forms. Category I furnaces include older, low-efficiency furnaces that are vented by natural convection and newer, mid-efficiency furnaces with induced-draft combustion blowers. Category I furnaces are the most commonly used furnaces in residential heating.

Gas Furnace Categories			
Category Number	Vent Pressure	Condensing or Noncondensing	Vent Pipe Material
I	Negative	Noncondensing	Class B
II	Negative	Condensing	Special per manufacturer
III	Positive	Noncondensing	Stainless steel
IV	Positive	Condensing	PVC

Goodheart-Willcox Publisher

Figure 41-30. Gas furnaces are categorized based on the vent pressure and the temperature of the flue gas.

A ***Category IV furnace*** is a positive-pressure venting, condensing furnace. The flue gas temperature is less than 140°F (60°C) (lower than its dew point). As a result, some of the flue gas condenses and drains away in liquid form. Category IV furnaces are high-efficiency condensing furnaces with secondary heat exchangers and PVC vent piping.

A ***Category II furnace*** is a negative-pressure, condensing furnace. A ***Category III furnace*** is a positive-pressure, noncondensing furnace. Both Category II and Category III furnaces require special vent materials. Category III furnaces are typically vented with stainless steel piping. Due to limited applications and high installation costs, Category II and Category III furnaces are rarely used in residential heating.

41.9 Gas-Fired Radiant Heat

Gas combustion is not used solely in central forced-air or hydronic heating systems to warm the air or water that is distributed throughout a conditioned space. Gas combustion may also be used for spot heating using radiant heating. Radiant heating heats ceramic elements to incandescence. A reflector is used to focus this heat. In gas-fired radiant heaters, about 50% of the heat energy is converted into radiant heat. These units typically operate at about 700°F to 1600°F (371°C to 871°C), **Figure 41-31**.

41.10 Gas-Fired Heating System Service

Gas-fired heating systems provide heat through the combustion of natural gas or liquefied petroleum (LP) gas. When installing a new gas-fired heating system, a technician should record certain information about the system, such as the type of fuel gas, the model number of the furnace, the filter size and

Copyright Goodheart-Willcox Co., Inc.

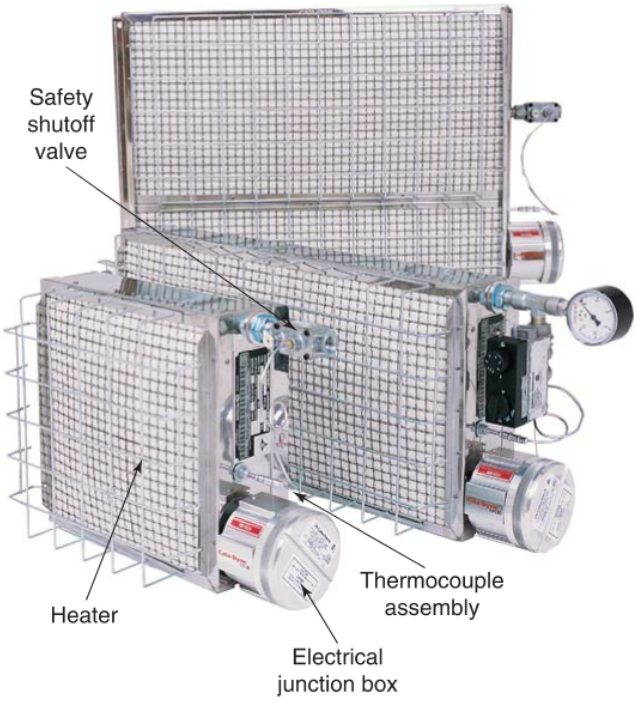

CCI Thermal Technologies Inc.

Figure 41-31. Gas-fired radiant heaters are designed to operate on either natural gas or LP gas.

type, the gas pressure at the gas valve manifold, and the stack temperature. Upon completion of the installation, a copy of this information should be given to the homeowner, and one copy should be retained and kept on record at the HVAC service company. This information will be valuable during future service calls because it can provide baseline data during troubleshooting. Areas of interest include gas piping, gas burners, operational controls, the combustion chamber and heat exchanger, and the flue and venting.

Code Alert

Gas Furnace Installation

All localities have building code requirements covering the installation of gas-fired heating systems. Some local building codes refer to the International Residential Code (IRC) for residential construction and to the International Building Code (IBC) and International Fuel Gas Code (IFGC) for commercial construction. The IRC includes a chapter on fuel gas. The requirements in this IRC chapter are the IFGC requirements applicable to residential construction. Local building codes may adopt the IRC, IBC, and IFGC directly or with exceptions. Always follow local building codes when installing fuel gas systems.

Service Call Scenario

41A: Residential Furnace—No Warm Air

Customer Complaint: No Warm Air

Description of Problem: The owner of a 2000 ft^2 home, Ms. Jones, contacts the service call center complaining that no warm air is coming out of her home's furnace. Prior to arrival at the residence, the HVAC technician, Juan, reviews the complaint and begins constructing an action plan. He arrives promptly at the residence, introduces himself, and listens carefully to Ms. Jones's complaint, making notes as needed.

Possible Causes: Defective ignition control module, defective transformer, open limit switch.

Testing: Juan places the thermostat on a call for heat. Entering the basement where the heating equipment is located, he observes the furnace operation and notes the gas fuel is not igniting. The furnace uses a 120-volt ignitor. Juan uses his multimeter and checks for the correct voltage at the ignitor. There is no voltage present at the ignitor. Next, he checks the ignition control module for output voltage to the ignitor. The result shows there is no voltage at the output terminal of the module. The ignition control module will need to be replaced. To make certain the ignitor is functional, Juan checks the ignitor by performing a resistance test with an ohmmeter. The reading shows that the ignitor is operational.

Solution: Juan shares with Ms. Jones that the ignition control module will need to be replaced and receives approval to do so. He replaces the module, and he then observes the system to ensure it is operating satisfactorily. He checks the air filter to ensure there are no airflow problems. The filter needs to be replaced, and Juan receives approval from Ms. Jones to do so. He provides her with a bill and informs her that he will follow up with a call to ensure the system is operating satisfactorily.

Safety: Turn off the electrical power to the furnace while installing an ignition control module. The main voltage to the module is 120 V, which can cause serious injury.

Copyright Goodheart-Willcox Co., Inc.

41.10.1 Gas Piping Installation

There are several options to use for fuel gas piping. Black iron pipe is most commonly used for natural gas applications, but corrugated stainless steel (CSS) is also used. Black iron pipe is treated so that it will not flake and contaminate the gas.

Code Alert

Gas Pipe Material

Building codes specify allowable materials and specifications for gas piping. The IRC and IFGC allows approved types of steel (including black iron pipe), corrugated stainless steel, wrought iron, copper, copper alloy, aluminum, and plastic. These codes prohibit the use of cast iron pipe.

Fuel gas piping must be sized correctly to meet the demands of the applications in the building. Factors that affect pipe size include the pressure drop of the piping, the specific gravity of the gas, and the amount of gas consumed by the furnace per hour. See **Figure 41-32**.

The following are some typical fuel gas piping installation guidelines. Always follow applicable code requirements:

- When buried, fuel gas piping must be at least 12″ below grade.
- Fuel gas piping must be supported at the distances shown in **Figure 41-33**.
- When installed outdoors and above ground or on a roof, fuel gas piping must be elevated at least 3 1/2″ above the ground or roof surface.

When assembling threaded pipe and fittings, use a pipe compound on the threads to ensure a leakproof connection. To prevent the pipe compound from getting into the pipe and potentially clogging orifices, do not apply the compound to the first two threads at the end of the pipe, **Figure 41-34**.

A ***drip leg*** is installed at the furnace along with a manual shutoff valve. The drip leg functions as a trap and collects possible moisture or sediment that may flow with the gas. See **Figure 41-35**. A drip leg is also required at the outlet of the gas meter to prevent condensate from running into the meter.

Code Alert

Drip Leg Requirements

The IRC and IFGC refer to drip legs as *drips*. Drip legs must be readily accessible for cleaning or emptying, and cannot be located where they may be subject to freezing. If the furnace does not include a sediment trap at the fuel gas inlet, a drip leg is installed for this purpose as near the furnace inlet as practical and "downstream" of the shutoff valve.

Gas Pipe Capacity (ft³/hr)

Nominal Iron Pipe Size (in)	Internal Diameter (in)	Length of Pipe (ft)													
		10	20	30	40	50	60	70	80	90	100	125	150	175	200
1/4	**0.364**	32	22	18	15	14	12	11	11	10	9	8	8	7	6
3/8	**0.493**	72	49	40	34	30	27	25	23	22	21	18	17	15	14
1/2	**0.622**	132	92	73	63	56	50	46	43	40	38	34	31	28	26
3/4	**0.824**	278	190	152	130	115	105	96	90	84	79	72	64	59	55
1	**1.049**	520	350	285	245	215	195	180	170	160	150	130	120	110	100
1 1/4	**1.380**	1,050	730	590	500	440	400	370	350	320	305	275	250	225	210
1 1/2	**1.610**	1,600	1,100	890	760	670	610	560	530	490	460	410	380	350	320
2	**2.067**	3,050	2,100	1,650	1,450	1,270	1,150	1,050	990	930	870	780	710	650	610
2 1/2	**2.469**	4,800	3,300	2,700	2,300	2,000	1,850	1,700	1,600	1,500	1,400	1,250	1,130	1,050	980
3	**3.068**	8,500	5,900	4,700	4,100	3,600	3,250	3,000	2,800	2,600	2,500	2,200	2,000	1,850	1,700
4	**4.026**	17,500	12,000	9,700	8,300	7,400	6,800	6,200	5,800	5,400	5,100	4,500	4,100	3,800	3,500

Reprinted by permission of the American Society of Heating, Refrigerating, and Air-Conditioning Engineers, Atlanta, Georgia, from the 1993 ASHRAE Handbook—Fundamentals

Figure 41-32. Chart used to size residential gas piping based on the amount of gas supplied in cubic feet per hour. The capacities provided are based on a gas pressure of 0.5 psig or less, a pressure drop of 0.5 in. WC, and a specific gravity of 0.60.

Copyright Goodheart-Willcox Co., Inc.

Required Support for Gas Piping	
Nominal Size	**Maximum Unsupported Length**
Steel Pipe	
1/2″	6′
3/4″ or 1″	8′
1 1/4″ or larger (horizontal)	10′
1 1/4″ or larger (vertical)	Every floor level
Tubing	
1/2″	4′
5/8″ or 3/4″	6′
7/8″ or 1″ (horizontal)	8′
1″ or larger (vertical)	Every floor level

Goodheart-Willcox Publisher

Figure 41-33. Gas piping requires support at different intervals based on its size and material.

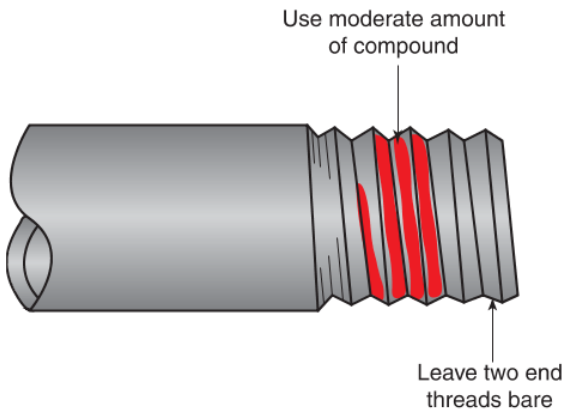

Honeywell, Inc.

Figure 41-34. The proper way to apply pipe compound to pipe threads.

After the gas piping has been assembled and connected to the appliance, the technician must perform a standing pressure test to check for leaks. A manometer with a proper range of measurement shall be used to test pressure. If pressure does drop, use soap bubbles or another approved gas detector to locate leaks and then repair them before performing another pressure test.

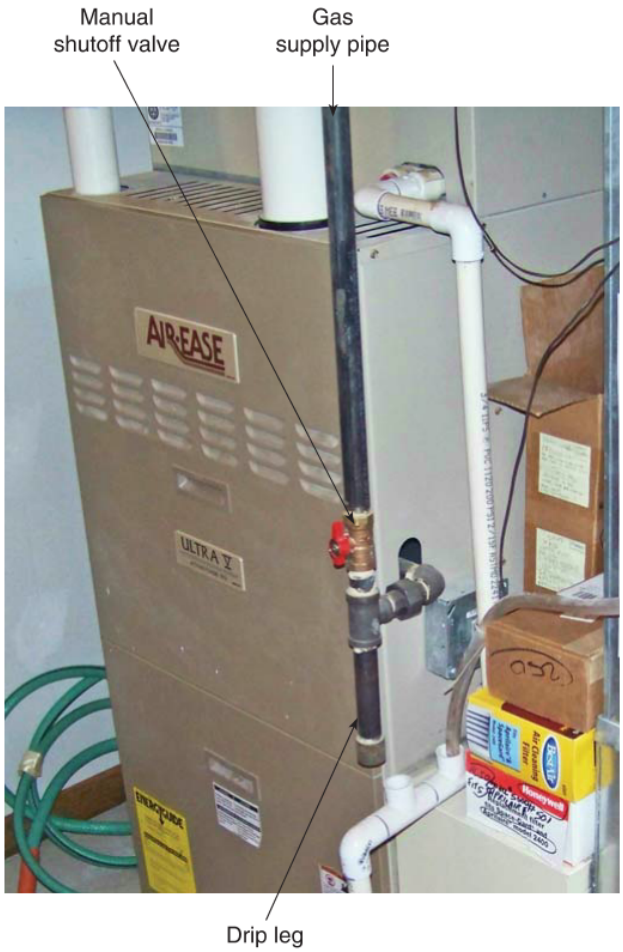

Goodheart-Willcox Publisher

Figure 41-35. A drip leg installed in the gas supply pipe to a gas furnace will trap dirt and moisture.

Code Alert

Gas Pipe Testing

After piping is installed but before it is placed into service, the IRC and IFGC require a visual inspection and a pressure test. The pressure test can be performed using air, nitrogen, carbon dioxide, or an inert gas. Oxygen cannot be used. Generally, a pressure of one-and-one-half times the maximum working pressure of the system must be held for at least ten minutes.

Safety Note

Gas Leak Testing

When checking for a gas leak, always use soap bubbles or a leak detector designed to detect fuel gas. Never use a halide torch or an open flame.

Copyright Goodheart-Willcox Co., Inc.

Code Alert

Gas Pipe Identification

The IRC and IFGC require exposed gas piping to be marked with a yellow label with the word *Gas* in black lettering. The maximum space between labels is 5′ intervals. This marking is not required for steel pipe and is not required for piping in the same room as the appliance.

41.10.2 Heat Exchanger Service

A heat exchanger should be tested prior to each heating season for possible cracks or open seams. These can be caused by heat or mechanical stress. Rust should be noted as well as any thinning of the heat exchanger wall (by 50% or more of the original thickness). Rust can be caused by condensate or a damp location. Check also for gasket or seal leaks. See **Figure 41-36**.

While checking a heat exchanger for leaks, a technician should consider the system and its operational characteristics. For instance, combustion gas should only be produced while the furnace is on. Also, the combustion blower should be operating while the furnace is on to provide the proper draft in the flue. When a system is off during inspection, be aware that some cracks may only be open or visible while the heat exchanger is hot from combustion heat.

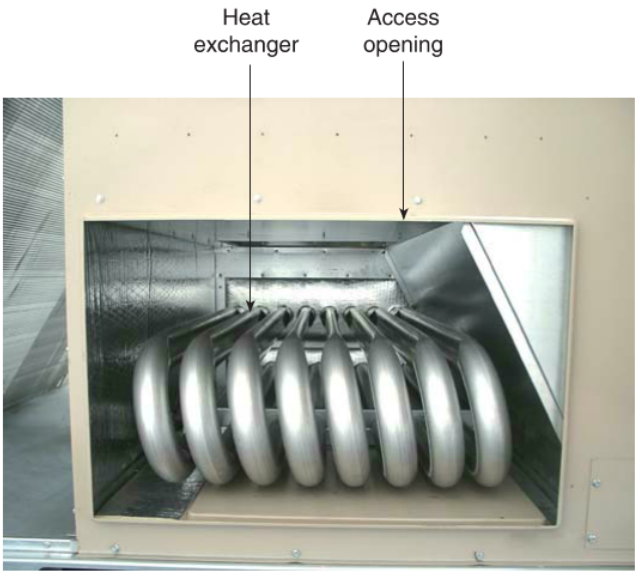

York International Corp.

Figure 41-36. With the access panel removed, a technician can visually inspect a furnace's heat exchanger.

Heat Exchanger Leak Test Procedure

A telescoping mirror and flashlight allow inspection of a small amount of a heat exchanger. However, do not rely on visual inspection alone as a true test of the heat exchanger's condition. The Gas Appliance Manufacturers Association (GAMA) recommends the following three-point check for gas furnaces.

1. Observe the flame before and after the indoor blower comes on to see if there is any change to the flame characteristics. If the flame characteristics change when the blower comes on, it can be an indication of severe deterioration of the heat exchanger or gasket material, a split seam, an open crack, or a physical separation of connected parts.
2. Perform a visual inspection of the heat exchanger. Look for rust, warping, holes, cracks, or other signs of deterioration. Visual inspection can be very limited in residential units because of evaporator coils or the shape of the heat exchanger.
3. Perform a chemical test on the heat exchanger. This test is done by introducing a chemical into the exchanger and using a device that detects the chemical in the supply air at room registers or grilles.

Safety Note

Carbon Monoxide (CO) Detection

Combustion gases containing carbon monoxide (CO) that escape from the heat exchanger into the supply air can be fatal to occupants. Technicians working on combustion appliances should be properly trained in carbon monoxide detection and have the equipment necessary to perform combustion analysis. Be aware that readings indicating the presence of combustion gas in the supply air can be produced by conditions other than a leaking heat exchanger, such as pressurization problems in the mechanical room.

41.10.3 Gas Furnace Maintenance

Annual maintenance of a gas furnace improves a furnace's performance and ensures the comfort and safety of customers. The following items should be checked by a technician during the annual inspection of a gas furnace. During the inspection, power to the furnace must be shut off for the technician's safety.

- Fresh air grilles and louvers must be open and unobstructed to provide combustion air.

Copyright Goodheart-Willcox Co., Inc.

- Burners should be inspected for rust, dirt, and signs of water.
- Flue pipe must be inspected for rust, dirt, signs of water, and damaged or disconnected joints.
- Furnace compartment should be inspected for rust, dirt, signs of water, and burned or damaged wires or components.
- Blower access door should be in place and provide a seal between the return air and the room in which the furnace is installed.
- Return air ducts must be properly attached and provide an air seal to the furnace.
- With the system running, the operating performance of the furnace and vent system should be checked.
- Flue gases must be analyzed and compared to the furnace's specifications.

Upon completion of the annual furnace inspection, the customer should be reminded to notify the technician and shut off the furnace if any of the following is noted:

- New or unfamiliar sounds while the furnace is operating.
- Unusual odors.
- Unusual amount of moisture in the conditioned space.
- Visibly burned components or unusual dirt or rust accumulation on the flue pipe or furnace.
- Flu-like symptoms that subside when the home's inhabitants are away from the house (indicating exposure to carbon monoxide).

41.10.4 Troubleshooting Gas Furnaces

The following tools and instruments should be brought on a service call in order for a technician to be well prepared:

- Digital manometer to measure duct static pressures and gas pressure.
- Multimeter to measure flame sensor rectification signals.
- Thermometer to measure air temperatures.
- Snake for plumbing and drain cleaning.
- Small inspection mirror.
- Combustion analyzer.

Begin an inspection of a gas furnace with a check of the general condition of the furnace and surrounding area. Some application and installation factors that frequently cause problems include the lack of satisfactory combustion air, improperly sized vents, malfunctioning air filters, and electrical shorts due to a water leak in the evaporator coils or humidifier.

Prior to beginning a lengthy troubleshooting process, check the obvious. Note any blown fuses or tripped breakers, loose wires or connections, burned components, or open safety switches. Check the manufacturer's instructions, observe the sequence of

Service Call Scenario

41B: Commercial Packaged Unit—No Heat

Customer Complaint: No Heat

Possible Causes: Dirty flame sensor, defective flame sensor, insufficient gas flow, defective gas valve.

Description of Problem: Mr. Thompson, owner of a small business, has reported that the furnace is not providing heat when it is needed. Prior to arriving at the jobsite, the technician, Scott, reviews the work order. Upon arriving at the place of business, he identifies himself to Mr. Thompson and listens carefully to his comments.

Testing: Scott sets the wall thermostat to call for heat. He observes that the burners come on, but then shut down very quickly. He checks the flame rod and notices a film coating on the metal rod. This is due to oxidation. The presence of the film confirms that the rod is not able to sense the burner flame correctly. He knows from previous experience that the flame rod needs cleaning. He informs Mr. Thompson of the issue and offers a solution and the cost for such. Mr. Thompson agrees to have Scott perform the services.

Solution: Scott shuts off the electrical source to the furnace. He then removes the flame rod and cleans it, using sand cloth or steel wool. He further checks for cracks on the ceramic portion and checks for loose connections. The flame rod is reinstalled. He is careful not to crack the ceramic base of the flame rod during reinstallation of the sensor. He starts the unit and the burners now remain on through the combustion cycle. Scott observes the entire heat cycle and is satisfied that all systems are working properly. He then provides Mr. Thompson with the bill and informs him that a follow-up call will occur.

Safety: Be careful when handling flame rods that may have recently been exposed to flame. The flame rod may be very hot to the touch and may cause burns.

Copyright Goodheart-Willcox Co., Inc.

Status Light Trouble Codes	
LED Light Status	**Trouble**
One (1) flash	System lockout due to retry
Two (2) flashes	Pressure switch stuck closed
Three (3) flashes	Pressure switch stuck open
Four (4) flashes	Open high-limit switch
Five (5) flashes	Open rollout switch
Six (6) flashes	Grounded sensor
Continuous flash	Flame sensed with no call for heat—must interrupt 120 V power supply for 1 second

Comfortmaker GNJ, International Comfort Products Corporation

Figure 41-37. Chart showing an ignition control module's corresponding LED light statuses and trouble codes for a hot-surface ignition system.

operation, and confirm correct wiring. If the furnace's ignition control module has an LED that indicates trouble codes, use the trouble codes to save time and guesswork. See **Figure 41-37**.

When servicing any type or make of heating equipment, always refer to the manufacturer's manuals for that equipment. The following are basic checks that should be implemented during a service call:

- Visually check all electrical components for loose wiring or defective (cracked) wires.
- Make sure electrical power is available at the furnace by checking the circuit breaker position.
- Check the disconnect switch at the furnace to ensure it is in the correct position.
- Make sure the blower door is secure. The door depresses an interlock switch that permits the furnace to operate.
- If a standing-pilot ignition system is used, check for a burning pilot light.
- Check the condition of the air filter.
- If a belt-driven blower is used, check the condition and adjustment of the belt.
- Check for any accumulation of dirt on the blower motor and blower cage.
- Start furnace operation by turning the thermostat to a high setting.
- Observe burner start-up and operation.
- Observe blower motor start-up.
- Allow the furnace to run for ten minutes. Then, check for airflow at room registers.
- Turn the thermostat to a lower setting to shut off burner operation. Check that the burner flames are off and the pilot light remains on (if a standing-pilot ignition system is used).
- Listen carefully to determine if the blower shuts off shortly after burner flames are extinguished.
- Check the flue gases for carbon monoxide level.

Ignition System Troubleshooting

Gas-fired heating systems have one of four types of ignition systems: standing pilot, intermittent pilot, direct spark, or hot surface. Knowing how each ignition system works is critical to troubleshooting. Both direct-spark and hot-surface ignition systems depend on an ignition control module that sends and receives signals to and from other components in the ignition system. A troubleshooting flowchart for a hot-surface ignition system is shown in **Figure 41-38**.

The charts provided by manufacturers cover many of the possible problems a system may experience. Troubleshooting flowcharts will vary depending on the type of ignition system used in a furnace. Note that due to the number of problems or causes of bad operation, one troubleshooting chart may refer to another chart for a different sequence of steps to follow. A troubleshooting flowchart for a direct-spark ignition system is shown in **Figure 41-39**.

Flame Troubleshooting

Gas furnaces are equipped with numerous control devices. Many times burners do not operate properly due to the conditions to which control devices react. For example, a furnace plenum may be equipped with a pressure switch. A pressure switch detects air pressure to ensure that the combustion blower is operating prior to burner ignition. If the combustion blower is not running, the pressure switch turns off the burner. Turning off a burner when the blower is not operating prevents a dangerous buildup of heat in the furnace. If the burner does operate when the combustion blower is not operating, the pressure switch may be ruined.

Proper start-up and operation of a furnace requires the correct gas pressure and mixture of fuel gas and air. Primary air promotes complete combustion. The amount of primary air entering some burner is controlled by adjusting a shutter. If a burner does not have a shutter adjustment, check the manufacturer's literature. When the proper amount of primary air is supplied, the burner flame has a soft-blue color without evidence of yellow tipping or lifting. The flame should not flash back, pop, float, or roll out. See **Figure 41-40**.

Copyright Goodheart-Willcox Co., Inc.

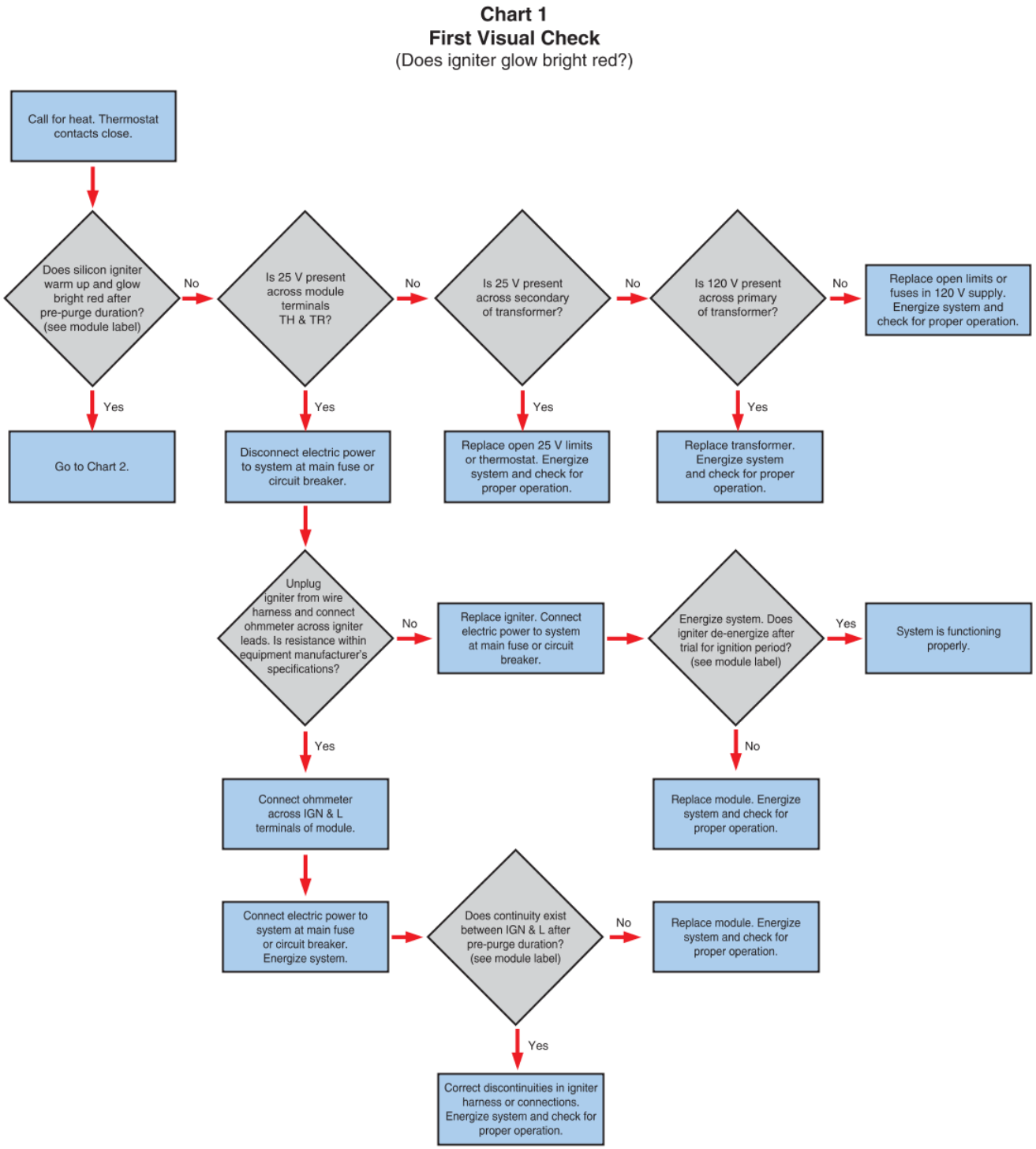

White-Rodgers Division, Emerson Climate Technologies

Figure 41-38. Part one of a three-part visual check procedure for a hot-surface ignition system.

Copyright Goodheart-Willcox Co., Inc.

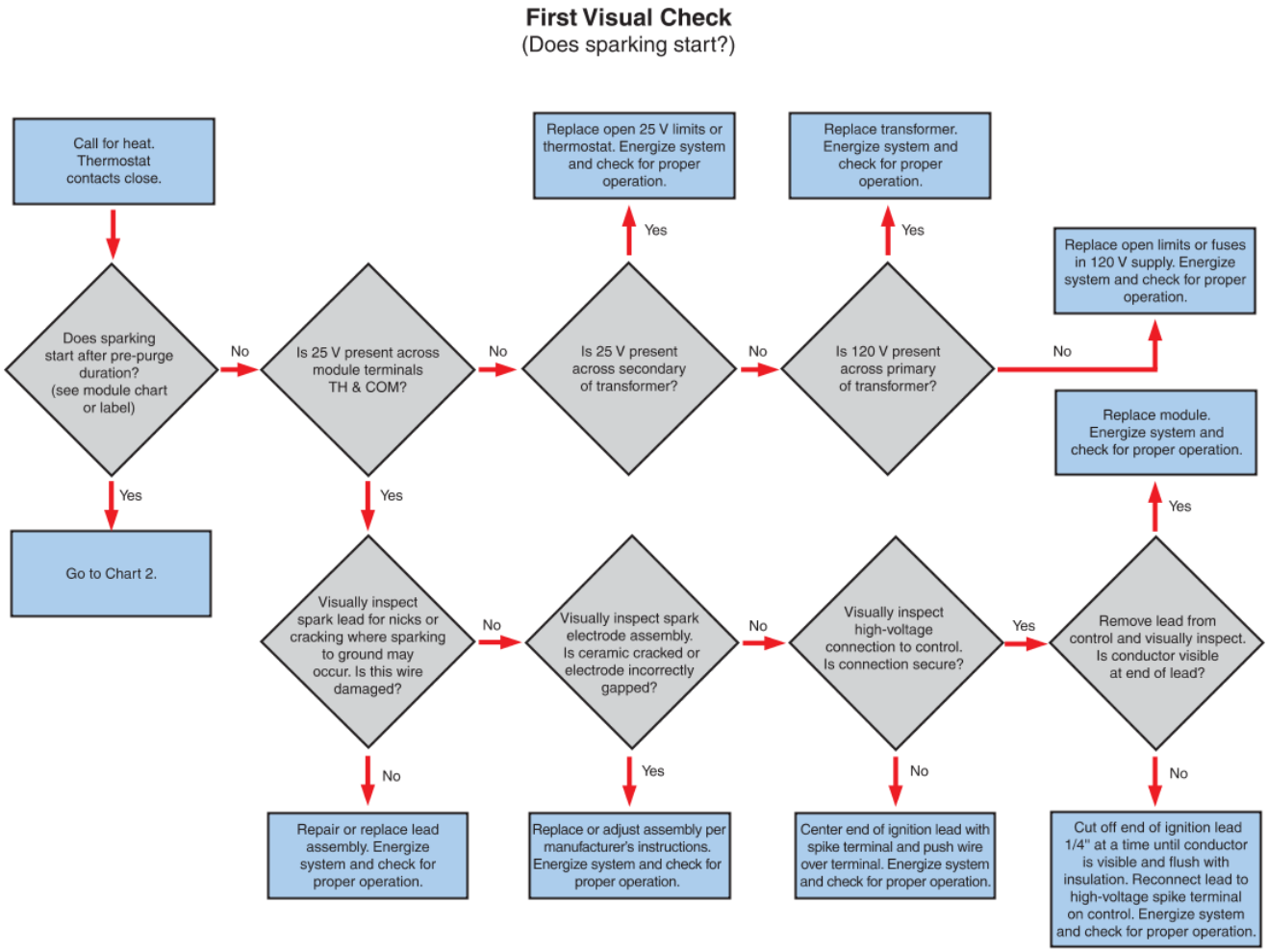

White-Rodgers Division, Emerson Climate Technologies

Figure 41-39. Visual check flowchart for a direct-spark ignition system.

Gas Furnace Flame Conditions		
Problem	**Possible Cause**	**Remedy**
Yellow flame	Lack of primary air.	Reset primary air and check for blockage.
Lifting flame	Gas velocity faster than the speed the gas can burn.	Reduce input gas or primary air.
Popping flame	Flashback during shutoff, burning continued.	Increase gas pressure, reduce primary air, reduce orifice size, check gas valve and burners.
Floating flame	Very dangerous! Incomplete combustion causing release of carbon monoxide.	Check gas flow, flue, burners, secondary air sources, and primary air.
Flame rollout	Very dangerous! Blocked flue, poor draft, insufficient air supply, burner overfiring.	Check gas flow, flue, burners, secondary air sources, and primary air.

Goodheart-Willcox Publisher

Figure 41-40. Improper flame conditions for gas furnaces, their possible causes, and their remedies.

Copyright Goodheart-Willcox Co., Inc.

41.10.5 Venting System Installation

A combustion heating system, such as an oil-fired or gas-fired heating system, must be vented to remove flue gases from the system. A technician must consider the following factors when installing venting systems: furnace capacity, heat load, type of flue pipe, length of flue pipe, rate of flue gas flow, and number of elbows. The manufacturer's recommendations should be checked when determining venting requirements. Consult the local municipality to confirm code requirements.

The rate of flue gas flow affects the amount of combustion air entering a furnace or boiler. This flow is affected by the pressure difference between the combustion air entering the appliance and the flue gas leaving the flue. In many systems, both the pressure in the building and the atmospheric pressure also affect the flow of flue gases. The temperature of the flue gases has an effect as well. If the flue gases are too cold, the flow will be slow. If flue gases are too hot, the flow will be fast. A chimney or flue pipe should extend at least 2′ (0.6 m) above the highest part of a roof. This helps prevent flue gases from flowing back into the chimney or flue pipe under certain wind conditions.

Some venting systems consist of a flue pipe that joins a chimney vented to the outside. Depending on the type of combustion heating system installed, the flue pipe can reach a temperature between 500°F and 600°F (260°C and 320°C). There are three types of flue pipes (or chimneys) that are commonly used: Class A (masonry type), Class B (double-wall metal type), and PVC. Some venting systems use a metal flex liner that is inserted into the entire length of Class A masonry chimneys.

Before installing a flex liner in a Class A chimney, make sure the chimney is clear and unobstructed. Care must be taken to clear the chimney completely, removing any obstructing mortar, tar, or creosote. Check the chimney for any cracked, loose, or missing bricks and make any repairs necessary to ensure safe internal and external conditions. The existing chimney must provide at least 1/2″ (1 cm) space between the metal flex liner and the masonry inner wall. The liner must be the proper size to ensure good exhaust. Manufacturer installation instructions will provide specifics regarding the proper liner sizing. After installing the metal flex liner and starting up the furnace, check for proper venting.

In high-efficiency furnaces and boilers, a conventional Class A or Class B chimney is not needed. Flue gases leave the appliance at 115°F to 118°F (46°C to 48°C), which means flue gases can be vented to the outside through a plastic pipe (PVC or CPVC). Fresh combustion air is often brought into the combustion chamber from the outside through another PVC pipe. These two air passageways can also be installed in a single length of concentric piping. By running a smaller diameter pipe through the length of a larger diameter pipe, a technician needs to cut only one hole through a wall or roof to install both airways for flue gas venting and combustion air intake, **Figure 41-41**.

Service Call Scenario

41C: Residential Gas-Fired Condensing Furnace—No Heat

Customer Complaint: No Heat

Possible Causes: Defective igniter, defective flame sensor, open safety switches.

Description of Problem: Ms. Frazier is the owner of a 2700 ft² residence located in the Midwest. She has reported that her furnace is no longer heating. Prior to arriving at the jobsite, Hal, the technician, reviews the work order. Upon arriving at the home, Hal identifies himself to Ms. Frazier and listens carefully to her comments.

Testing: Hal places the wall thermostat to call for heating. He observes the furnace operation. Hal notes that the furnace is not starting the combustion cycle. He notes that the combustion blower is not operating as would be expected and that the low-pressure switch is closed. Hal sees that the hot-surface igniter is not glowing red. With the electrical power off, he performs a resistance check on the igniter. The reading indicates that the igniter is opened due to a small crack. He determines that the igniter must be replaced. Hal informs Ms. Frazier of the issue and offers the solution and cost for such. Ms. Frazier agrees to have Hal perform the needed service.

Solution: Hal replaces the igniter and restores the electrical power to the furnace. The hot-surface igniter now glows cherry red and ignites the gases. The heating cycle is further checked and all operations are performing in a satisfactory manner. Hal provides Ms. Frazier with the bill and informs her that a follow-up call will occur.

Safety: Always use caution when checking the operation of hot-surface igniters. When energized, they produce very hot temperatures that can cause serious burns. Never touch an energized igniter.

Copyright Goodheart-Willcox Co., Inc.

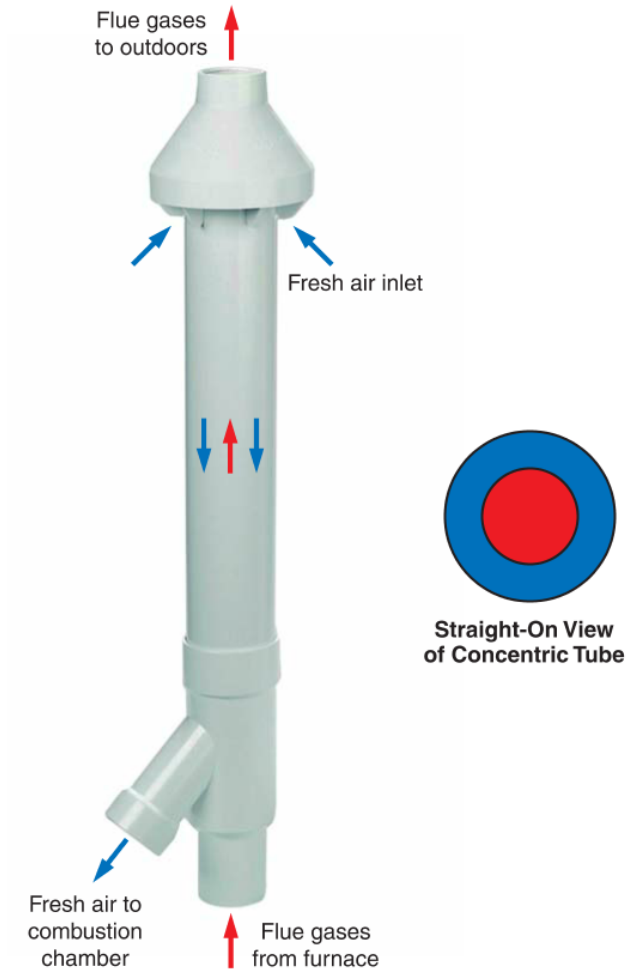

DiversiTech Corporation

Figure 41-41. A concentric pipe used for fresh air intake and flue gas venting for a high-efficiency condensing furnace. Combustion gases flow through a central pipe, and intake air flows through a larger pipe around the central pipe. Two separate airways are contained in one body.

When installing a PVC flue pipe for high-efficiency furnaces or boilers, a technician may install the pipe either vertically or horizontally. Either way, a flue pipe should use the shortest route possible with the fewest number of elbows. The combustion air intake and flue pipe outlet must exit the exterior wall at the proper distance and direction from each other. The proper distance is specified by the furnace manufacturer.

Code Alert

Vent System Sizing and Locations

Appendix B in the IRC and IFGC provides guidelines for the sizing and installation of venting systems, including systems serving multiple appliances. Appendix C provides location guidelines for through-wall vent exhausts.

All PVC connections must be leakproof. A wall termination kit can be installed at the ends of the PVC pipes to prevent objects from entering the pipes while still allowing for the proper intake of combustion air and for the venting of the appliance. Due to the lowered flue gas temperature, a drain line is needed to dispose of condensate. Care should be taken to prevent condensate from freezing.

It is usually best for a furnace or boiler to be individually vented. However, if a flue or chimney must be shared by two or more gas-burning appliances, thoroughly review manufacturer literature and requirements and recommendations from the International Fuel Gas Code.

Some installations with Class A and Class B chimneys or flues use a ***draft regulator***. This is a device that regulates the intake of indoor air into the flue to moderate or stabilize the flow of flue gas. A draft regulator is installed in the flue pipe outlet opening or as a section of the flue pipe.

Draft regulators are sometimes called vent dampers. Draft regulators may be controlled thermostatically, electrically, or barometrically. A thermostatic draft regulator opens when a bimetal element senses and reacts to the heat of flue gas. An electric draft regulator uses a motor or actuator to open when the thermostat calls for heat and to close when the call for heat ends. A vacuum draft regulator operates like a barometric damper by opening under pressure difference, such as when pulled open by the negative pressure of flue gas suction. An adjustable counterweight keeps a vacuum draft regulator closed when no suction is present, **Figure 41-42**.

Field Controls, LLC

Figure 41-42. A vacuum draft regulator has a counterweight that can be adjusted to change the amount of air intake, which affects the rate of airflow in the flue pipe.

Copyright Goodheart-Willcox Co., Inc.

Summary

- Combustion is a chemical process of rapid oxidation that requires fuel, heat, and oxygen. The products of complete combustion are carbon dioxide, water, and energy.
- Combustion occurs only when the ratio of air to fuel is within an acceptable range. A fuel's flammability limits are the range of fuel concentrations within which the fuel will burn when ignited.
- Primary air is air mixed with fuel prior to ignition. Secondary air is air added to a flame after ignition to maintain combustion. Excess air is any secondary air that exceeds the amount of air necessary for complete combustion.
- To determine a furnace's combustion efficiency, a technician measures the carbon dioxide (CO_2) content, carbon monoxide (CO) content, fuel gas pressure, oxygen (O_2) content, and stack temperature. The carbon dioxide, oxygen, and carbon monoxide content indicate whether complete combustion is occurring. Checking the gas pressure helps a technician identify the cause of incomplete combustion. The stack temperature can be used to calculate a furnace's efficiency.
- A combination gas valve incorporates a manual shutoff valve, multiple solenoid valves, a pressure regulator, and safety shutoff in a single valve body.
- Atmospheric gas burners use the venturi effect to induce airflow through the burner without the need for a blower. Atmospheric gas burners can be subcategorized as ribbon, slotted, or single-port burners. Power burners use a blower to force both primary and secondary air into the burner tube.
- Standing-pilot ignition systems have a continuously burning pilot light that is monitored by a thermocouple. Intermittent-pilot ignition systems have a pilot light that is ignited only when needed. Flame rectification or a thermocouple is used to verify the presence of a flame.
- Direct-spark ignition (DSI) systems use an electric spark to ignite the gas burners. The electrodes used to create the spark can also be used for flame detection. Hot-surface ignition (HSI) systems use glow coils to produce the heat needed to ignite the burners.
- An ignition control module initiates a furnace's On cycle when it receives a call for heat signal from a system thermostat. Ignition control modules are responsible for opening and closing the gas valve, operating the ignition system, and monitoring safety and limit controls to ensure the proper operating conditions. Control modules come with a number of functions, some of which include trial for ignition, soft lockout, hard lockout, pre-purging, inter-purging, and post-purging.
- Gas furnace safety controls include high-limit switches, which prevent overheating, and rollout switches, which shut down the furnace in cases of flame rollout. Rollout switches must be reset manually. End switches or pressure switches are used to verify that a combustion blower is operating before the burners can be ignited.
- Mid-efficiency furnaces have an efficiency rating between 79% and 83% AFUE and do not generate condensate from flue gases. High-efficiency furnaces have a secondary heat exchanger and achieve an efficiency rating between 90% and 97% AFUE. High-efficiency furnaces do not require a traditional chimney, but must be designed to withstand corrosive condensate.
- Gas furnaces are categorized by their flue gas temperature and vent pressure. The two most common furnace types are Category I and Category IV. Category I furnaces are negative-pressure venting, noncondensing furnaces. Category IV furnaces are positive-pressure venting, condensing furnaces. Category II and Category III furnaces are rarely used.
- Black iron pipe is commonly used for gas piping in a gas-fired heating system.
- A drip leg and a manual shutoff valve must be installed in gas piping to a gas furnace. After gas piping has been assembled, a technician must perform a standing pressure test and find and fix any leaks if the standing pressure has dropped.
- Heat exchangers should be visually inspected and tested chemically for cracks or leaks prior to each heating season. A chemical test indicates whether combustion gases are escaping from the heat exchanger into the supply air.
- The three types of flue pipes or chimneys commonly used are Class A (masonry type), Class B (double-wall metal type), and PVC. An approved metal flex liner can also be installed in a Class A chimney. A PVC flue pipe for high-efficiency appliances can be installed either vertically or horizontally.

Copyright Goodheart-Willcox Co., Inc.

Review Questions

Answer the following questions using the information in this chapter.

1. All fuels contain hydrogen and _____ atoms.
   A. carbon
   B. helium
   C. oxygen
   D. silicon
2. A fuel-air mixture in which there is not enough fuel for combustion is _____.
   A. energy efficient
   B. lean
   C. rich
   D. stoichiometric
3. If a flame tip is yellow, it is a sign of a(n) _____.
   A. closed gas valve
   B. excess of primary air
   C. ignition lockout
   D. lack of primary air
4. The maximum concentration of carbon monoxide (CO) permitted in furnace flue gas is _____.
   A. 100 ppm
   B. 200 ppm
   C. 300 ppm
   D. 400 ppm
5. As stack temperature increases, combustion efficiency _____.
   A. decreases
   B. increases
   C. remains unaffected
   D. All of the above.
6. An increase in gas pressure causes similar conditions as a(n) _____.
   A. decrease in flame temperature
   B. excess of air
   C. lack of air
   D. All of the above.
7. Gas manifolds have threaded holes in which _____ are installed.
   A. burners
   B. pressure switches
   C. rollout switches
   D. spuds
8. The most efficient type of atmospheric gas burner is the _____ burner.
   A. inshot
   B. power
   C. ribbon
   D. slotted
9. A thermal detection system for a standing pilot furnace uses a(n) _____ or bimetallic element to sense a pilot light.
   A. diaphragm switch
   B. fluid-filled bladder
   C. glow coil
   D. thermocouple
10. Flame rectification is the process of detecting a flame by _____.
    A. measuring heat intensity with an infrared sensor
    B. measuring light intensity with an optical sensor
    C. refocusing a flame's direction with a deflector plate
    D. using the flame to change alternating current to direct current
11. One disadvantage of a(n) _____ ignition system is that it can create electromagnetic interference, which can disrupt the operation of the ignition control module.
    A. direct-spark
    B. hot-surface
    C. intermittent-pilot
    D. standing-pilot
12. Ignition control modules allow igniters a limited amount of time, called _____, to ignite the burner.
    A. hard lockout
    B. post-purge
    C. soft lockout
    D. trial for ignition
13. An ignition control module with _____ requires a service call to reset or interrupt power to the module.
    A. hard lockout
    B. non-100% shutoff
    C. post-purge
    D. soft lockout
14. A _____ is used to detect a flame that spills backward out of a burner.
    A. flame rod
    B. high-limit switch
    C. rollout switch
    D. thermocouple
15. A(n) _____ is connected to the end of a damper motor shaft and is used to verify that a combustion blower is on.
    A. end switch
    B. high-limit switch
    C. pressure switch
    D. rollout switch

Copyright Goodheart-Willcox Co., Inc.

16. A high-efficiency furnace _____.
    A. has an AFUE rating of 90% and above
    B. has a secondary heat exchanger
    C. uses PVC pipe to vent flue gases
    D. All of the above.
17. The two primary factors determining a furnace's venting category are _____.
    A. ignition system and gas pipe material
    B. thermostat type and furnace blower cfm rating
    C. type of fuel gas used and burner type
    D. vent pressure and flue temperature
18. Gas-fired heating systems are most often supplied with natural gas using _____.
    A. ABS pipe
    B. black iron pipe
    C. cadmium tubing
    D. PVC pipe
19. Installed in the gas supply piping at the furnace, a(n) _____ functions to trap and collect possible contaminants that may flow with the gas.
    A. drip leg
    B. in-line filter
    C. open vent in the piping
    D. P trap
20. When checking for a gas leak, technicians should use _____.
    A. a halide torch
    B. open flames
    C. soap bubbles
    D. ultraviolet light
21. Which of the following would be most useful to ensure that gas piping is installed correctly?
    A. ANSI/ASHRAE Standard 103.
    B. International Fuel Gas Code.
    C. International Plumbing Code.
    D. National Electrical Code.
22. When the proper amount of primary air is supplied to a gas furnace, the flame should have a(n) _____ color.
    A. black
    B. blue
    C. orange
    D. red
23. A chimney or flue pipe should extend at least _____ above the highest part of a roof.
    A. 3″ (0.0762 m)
    B. 2′ (0.6 m)
    C. 5′ (1.5 m)
    D. 10′ (3 m)
24. High-efficiency furnaces typically vent flue gases and bring in fresh outdoor air through _____.
    A. black iron pipe
    B. copper tubing
    C. PVC pipe
    D. stainless steel pipe
25. A draft regulator may be installed in some _____ to moderate or stabilize the flow of flue gas.
    A. combustion air inlets
    B. combustion chambers
    C. flue pipes
    D. heat exchangers

Copyright Goodheart-Willcox Co., Inc.

CHAPTER 42 Oil-Fired Heating Systems

Chapter Outline

42.1 Basic Oil Furnace Operation
42.2 Fuel Oil
42.3 Combustion Efficiency
- 42.3.1 CO_2 Test
- 42.3.2 Stack Temperature Test
- 42.3.3 Draft Test
- 42.3.4 Smoke Test

42.4 Fuel Line Components
- 42.4.1 Oil Deaerators
- 42.4.2 Fuel Line Filters
- 42.4.3 Booster Pumps

42.5 Oil Burners
- 42.5.1 Oil Burner Construction
- 42.5.2 Electrodes
- 42.5.3 Oil Burner Nozzles
- 42.5.4 Oil Burner Motors
- 42.5.5 Oil Burner Fans
- 42.5.6 Fuel Units

42.6 Primary Control Units
- 42.6.1 Stack Relays
- 42.6.2 Cad Cell Relays
- 42.6.3 Ignition Control
- 42.6.4 Primary Control Unit Functions

42.7 Oil Furnace Exhaust
- 42.7.1 Combustion Chambers
- 42.7.2 Oil Furnace Venting

42.8 Oil-Fired Heating System Service
- 42.8.1 Storage Tank and Fuel Line Installation
- 42.8.2 Oil Burner Installation
- 42.8.3 Oil Furnace Maintenance
- 42.8.4 Troubleshooting Oil Furnaces

Learning Objectives

Information in this chapter will enable you to:

- Summarize the basic operation of an oil furnace.
- Identify the characteristics of fuel oil.
- Perform several tests to check the combustion efficiency of an oil-fired heating system.
- Compare the advantages and disadvantages of using a one-pipe or two-pipe fuel delivery system.
- Describe the functions of different fuel line components.
- Identify oil burner components and explain their purposes.
- Explain how stack relays and cad cell relays are used to detect the presence of a flame.
- Describe the difference between interrupted and intermittent ignition.
- Define the various functions of a primary control unit.
- Follow code requirements for installing fuel lines and storage tanks for an oil-fired heating system.
- Bleed an oil-fired heating system's fuel lines and perform other routine maintenance and service procedures.

Technical Terms

above gap
adjustable air band
air tube
ash content
atomization
blowback
booster pump
bypass plug
cad cell
CO_2 test
combustion head
distillation quality
draft
draft gauge
draft test
electrode gap
flame failure response time (FFRT)
flame retention oil burner
flue draft test
front gap
fuel line filter
fuel oil
fuel unit
gun burner
ignition carryover
ignition point
ignition transformer
intermittent ignition
interrupted ignition
oil burner
oil burner fan
oil burner motor
oil burner nozzle
oil deaerator
one-pipe fuel delivery system
overfire draft test
overfiring
patterning
pot burner
preignition
primary control unit
recycle limit
recycle time
refractory material
reset limit
smoke test
solid-state igniter
stack relay
standard oil burner
standby
static pressure disk
two-pipe fuel delivery system

Review of Key Concepts

Reviewing these concepts from earlier chapters will help you understand new concepts presented in this chapter:

- The measurement of furnace efficiency is the annual fuel utilization efficiency (AFUE) rating. The higher the AFUE rating, the more efficient and cost-effective a furnace is. (Chapter 41)
- A fluid with high viscosity resists flowing while a fluid with low viscosity flows more easily. The lowest temperature at which a fluid will flow is referred to as its pour point. (Chapter 9)
- Technicians use a combustion analyzer to measure flue gas variables, such as carbon dioxide content (CO_2), carbon monoxide content (CO), and oxygen content (O_2), by measuring in a furnace's flue. (Chapter 41)
- Stack temperature, or net stack temperature, is the temperature of the flue gas in the flue minus the temperature of the combustion air. As excess air increases, a furnace's stack temperature also increases, and the furnace's efficiency decreases. (Chapter 41)
- Some Class A and Class B chimneys or flues use a draft regulator, which is a device that regulates the intake of indoor air into the flue to moderate or stabilize the flow of flue gas. A draft regulator is installed in the flue pipe outlet opening or as a section of the flue pipe. (Chapter 41)
- A transformer uses an alternating current in one coil of wire to generate a magnetic field that induces an alternating current in another coil of wire that is electrically isolated from the first coil. A transformer with more turns in its secondary coil than in its primary coil is a step-up transformer. (Chapter 12)

Introduction

Oil-fired heating systems use the combustion of vaporized fuel oil to create heat for distributing throughout a conditioned space. Oil-fired systems come in a variety of designs, such as forced-air oil furnaces, oil-fired boilers, and oil-fired unit heaters. Heat from fuel oil combustion is transferred through a heat exchanger into a medium, such as air or water, which then distributes the heat throughout a conditioned space. The products of combustion are piped from a combustion chamber into a flue leading outdoors.

Oil furnaces are available in a broad range of Btu capacities and in upflow, downflow, and horizontal designs. The minimum allowable annual fuel utilization efficiency (AFUE) rating for an oil furnace is 78%. Manufacturers of standard oil furnaces have mostly kept AFUEs below 85% to minimize problems resulting from flue gases that cool and condense into a corrosive liquid. However, some manufacturers have produced oil-fired condensing furnaces with over 90% AFUE that can capture additional heat from flue gas and safely pipe away corrosive condensation.

Videos

- Fuel Line Components
- Oil Furnace Inspection and Maintenance
- Oil Supply Piping

42.1 Basic Oil Furnace Operation

The main focus of this chapter on oil-fired heating systems is the forced-air oil furnace. Comprehending the basic operation of a forced-air oil furnace will help you understand the function of the system's individual components as they are covered in detail later in this chapter, **Figure 42-1**.

A system thermostat calling for heat initiates oil furnace ignition. The primary control unit receives the thermostat signal and responds by turning on the oil burner motor. This motor turns a fan to provide combustion air and also turns a pump inside the fuel unit that delivers fuel oil to the oil burner. The primary control unit also opens a solenoid valve in the fuel line. The primary control unit later closes this solenoid

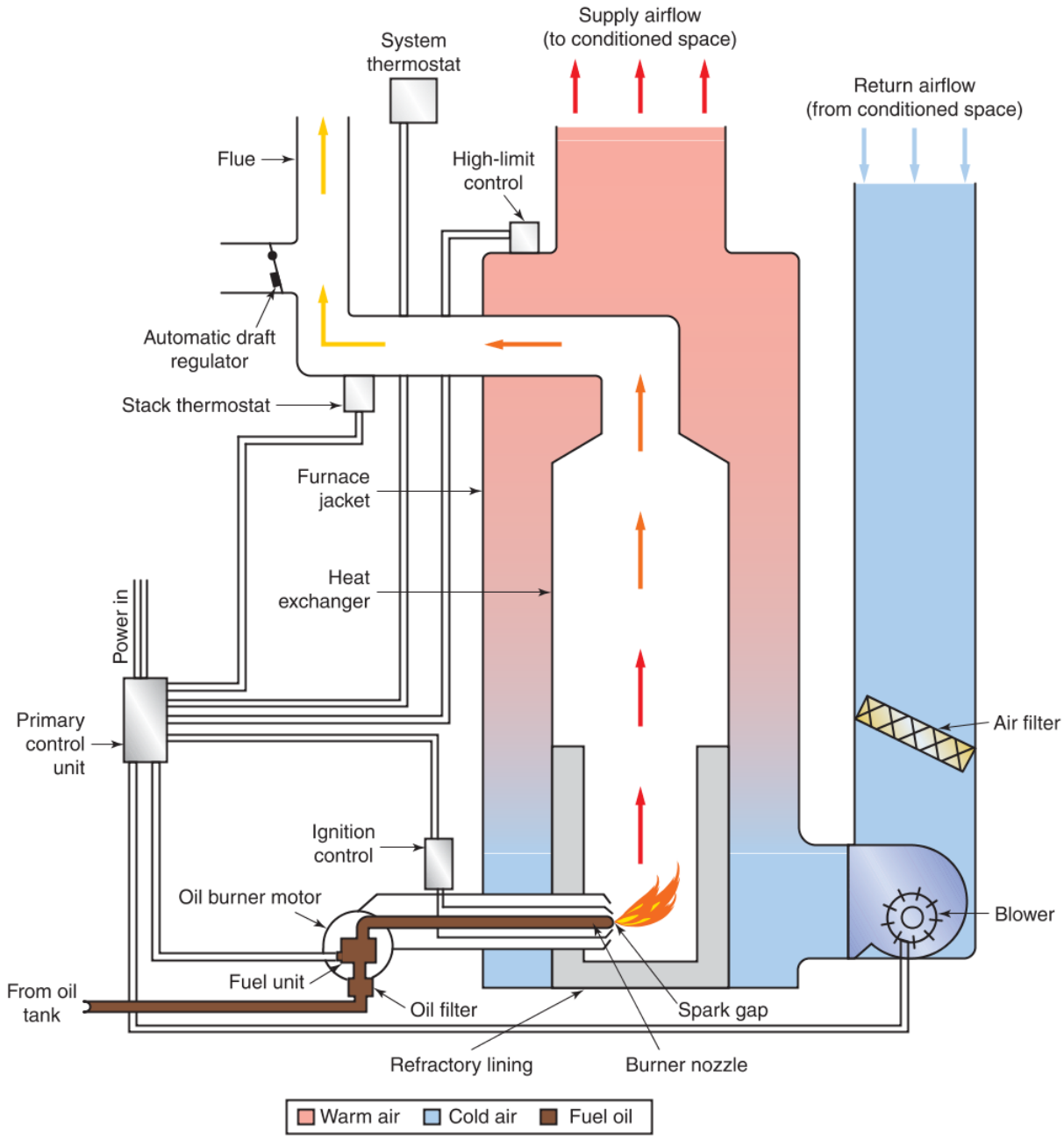

Goodheart-Willcox Publisher

Figure 42-1. Simplified diagram showing the components of a forced-air oil furnace.

Copyright Goodheart-Willcox Co., Inc.

valve to stop oil flow to the oil burner when the thermostat ends its call for heat.

As the oil burner motor operates the fan and fuel unit pump, air and fuel oil mix and are blown into a combustion chamber. The primary control unit signals ignition control to send high-voltage electricity to the electrodes positioned at the outlet of the oil burner. The high voltage arcs across the electrodes and ignites the mixture of air and fuel oil.

As more air and oil burn, heat building up in the combustion chamber warms the heat exchanger. The primary control unit turns on an indoor blower that circulates air from the conditioned space around the heat exchanger. Heat within the heat exchanger is transferred to this air, which warms a building as it circulates throughout. Meanwhile, the products of combustion are contained within the heat exchanger away from air circulated to the conditioned space. Eventually, the products of combustion are vented to the atmosphere. When the thermostat is satisfied with the temperature in the conditioned space, it stops its call for heat. The primary control unit closes the fuel supply line solenoid and turns off the oil burner motor, which stops pumping fuel oil and combustion air. The indoor blower may be allowed to run for a short while longer to extract accumulated heat in the heat exchanger. This ends an oil furnace's On cycle.

42.2 Fuel Oil

To produce heat, oil-fired heating systems burn a substance called ***fuel oil***, which is a refined form of petroleum. Fuel oil grades are established by the US Department of Commerce and conform to specifications set forth by the American Society for Testing and Materials (ASTM). There are six common fuel oils. The most commonly used fuel oil in residential and light commercial heating applications is No. 2 fuel oil. No. 2 fuel oil is also called *heating oil*. Fuel oil is stored in a tank that is located outside a building, inside a building, or underground, **Figure 42-2**.

Fuel oil has a number of characteristics that should be understood by HVACR technicians:

- Heating value.
- Flash point.
- Ignition point.
- Distillation quality.
- Viscosity.
- Pour point.
- Carbon residue.
- Ash content.
- Water and sediment content.

Donald Gargano/Shutterstock.com

Figure 42-2. Fuel oil tank installed outside the building being heated. In cold climates, an additive must be mixed with fuel oil stored in outdoor tanks to prevent the oil from gelling or forming wax.

Heating value is how much heat (in Btu per gallon) a fuel oil can produce. The heating value of No. 2 fuel oil is generally approximated to be 140,000 Btu per gallon. However, the actual value ranges from 137,000 Btu per gallon to 141,800 Btu per gallon. This value varies because there is variation in the carbon and hydrogen content of different batches of fuel oil. Just like the fuel gases used in gas furnaces, fuel oils are hydrocarbons. Generally, fuel oils contain about 85% carbon and 12% hydrogen. Various other elements make up the remaining 3% of the fuel oil. The greater the carbon content is, the higher the heating value.

A fuel oil's flash point is the minimum temperature at which a flame will ignite fuel oil vapor above a pool of liquid fuel oil. Just above a fuel oil's flash point is its ***ignition point***, which is the minimum temperature at which a flame will ignite and continue to burn fuel oil vapor as it rises from a pool of liquid fuel oil. Since fuel oil must burn as a vapor, instead of a liquid, its ability to vaporize is important to engineers and manufacturers. This ability is called a fuel oil's ***distillation quality***.

Viscosity is a measure of a liquid's resistance to flow. A fuel oil's viscosity plays a part in determining what size burner nozzle orifice should be used by an oil burner. An orifice that is too small results in a cool or weak flame caused by having insufficient fuel to burn. An orifice that is too large results in unburned fuel oil, which creates excessive smoke and a buildup of soot in the combustion chamber.

Copyright Goodheart-Willcox Co., Inc.

Pro Tip

Saybolt Universal Second

The Saybolt universal second (SUS or SSU) is a measurement of viscosity based on the amount of time required for a specific volume of oil to flow through a specific size orifice at a specific temperature. This unit of measure is generally considered obsolete, but is still widely used in the petroleum industry.

The viscosity of No. 2 fuel oil varies from between 50 SUS and 100 SUS at 0°F (–18°C) to between 35 SUS and 45 SUS at 70°F (21°C). This means that gun burners may have pumping and combustion problems when the fuel oil is cold.

As the temperature decreases, substances like fuel oil begin to solidify and do not flow as easily. A fuel oil's pour point determines the minimum temperature at which it can be stored, retrieved, and used. A fuel oil's pour point also determines where the fuel oil tank is located for a given application. In some climates, this may be outside or underground. In other climates, it must be inside a building.

Ideally, there should be no carbon residue left after combustion. However, in some cases where not enough oxygen is available for combustion, carbon residue may result in the form of soot. The amount of residue produced by combustion should be kept to a minimum.

Fuel oils may also contain certain amounts of materials that do not burn in the combustion process. These materials are contaminants that cause wear and tear on oil furnace components. The amount of non-combustible contaminants in fuel oil is referred to as the fuel oil's ***ash content***.

Although manufacturers strive to produce pure fuel oil, some small amounts of water and contaminants may get into fuel oil at some point. The water and sediment content should be as minimal as possible. Sediment can clog filters, and water corrodes fuel oil tanks and can decrease the quality of a flame.

42.3 Combustion Efficiency

During fuel oil combustion, carbon (C) and hydrogen (H) combine with oxygen (O_2) in the air. This produces carbon dioxide (CO_2) and water (H_2O) in vapor form. A certain amount of fuel oil requires a certain amount of oxygen to burn properly. This process also requires a certain amount of air to displace the products of combustion and move them safely out of the flue. About 106 lb of air is required to burn one gallon of No. 2 fuel oil.

Pro Tip

Air Density

The density of dry air increases as temperature increases. As a result, the actual volume of air required for combustion varies depending on temperature which varies based on whether the air is drawn from inside the building or outside the building.

When complete combustion occurs, the proper flame appearance is luminous, mainly yellow. A flame that is dull orange or red may be caused by incomplete combustion. However, to properly diagnose incomplete combustion and to determine combustion efficiency, an HVACR technician must monitor several variables using a combustion testing kit, **Figure 42-3**.

A combustion testing kit allows a technician to calculate oil furnace efficiency by conducting the following individual tests:

- CO_2 test.
- Stack temperature test.
- Draft test.
- Smoke test.

42.3.1 CO_2 Test

The amount of carbon dioxide (CO_2) in flue gas is an indicator of combustion efficiency. A ***CO_2 test*** measures the amount of CO_2 in the flue gas to determine if complete combustion is taking place. Measuring CO_2 can be done using traditional testing instruments or a digital combustion analyzer. When using a combustion analyzer, a technician inserts the analyzer's probe into a small hole in the flue pipe. The probe should be positioned near the hottest part of the flue to obtain accurate readings.

Safety Note

Combustion Analyzer Probe

The combustion analyzer probe can be a burn hazard. Do not touch the probe after removing it from the flue pipe. Allow the probe about five minutes to cool before handling it.

In the traditional method, a flue gas sample is exposed to a chemical that absorbs only carbon dioxide. If 10 cm^3 of flue gas reduces to 9 cm^3 of gas after exposure to the chemical, the flue gas contains 1 cm^3 of carbon dioxide, which is 10%, **Figure 42-4**.

If the gas cools during the traditional testing procedure, however, its volume is reduced. This means the technician will obtain an incorrect reading indicating that the amount of CO_2 is too high. As a result, the flue

Copyright Goodheart-Willcox Co., Inc.

Bacharach, Inc.

Figure 42-3. A combustion testing kit used to test oil furnace efficiency during installation or service.

Bacharach, Inc.

Figure 42-4. Traditional CO_2 testing instruments include a measuring cylinder with attached aspirator bulb and a sampling tube.

gas temperature must be known before and after testing, and a correction must be made for accurate results. Tables are provided by equipment manufacturers.

When stoichiometric combustion (perfect combustion), takes place, about 15% of the flue gas volume is CO_2. However, oil furnaces cannot achieve perfect combustion because they use excess air to ensure complete combustion, which dilutes the amount of CO_2 in the flue gas. See **Figure 42-5**.

Oil furnace exhaust will vary in CO_2 content. Some operate correctly with as low as 8% CO_2 while others operate correctly with as high as 12% CO_2. The manufacturer's service manual will state the correct amount for the system being tested.

A low CO_2 reading (below 8%) indicates that incomplete combustion is occurring. Causes of low CO_2 measurements include a burner nozzle that is too small, air leaking into the heat exchanger, and underfiring. A CO_2 content that is too high usually results in excess smoke in the flue gas. Causes of high CO_2 measurements include an insufficient draft and overfiring. ***Overfiring*** is a condition in which a heating system creates too much heat. This causes high flue gas temperature and may even result in the flue pipe turning red.

Copyright Goodheart-Willcox Co., Inc.

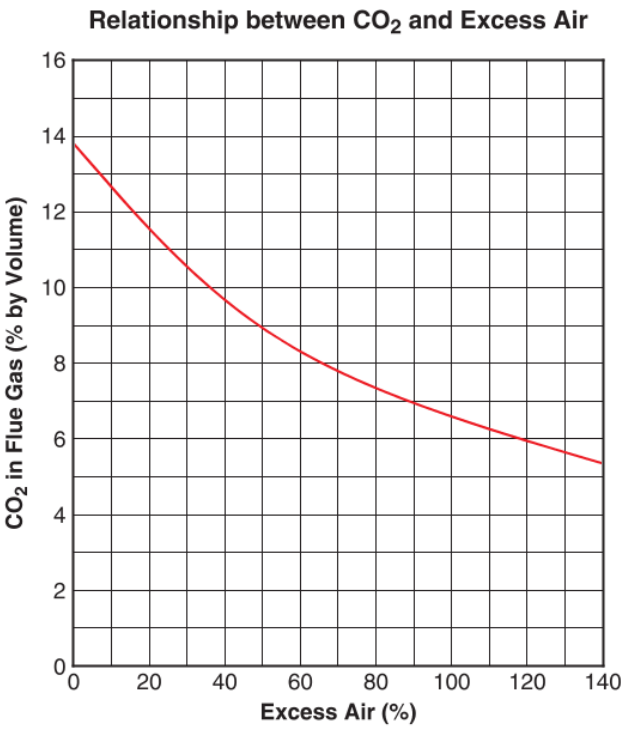

Goodheart-Willcox Publisher

Figure 42-5. As excess air increases in an oil furnace, it reduces the percentage of carbon dioxide in the flue gas by volume.

In oil-fired heating systems, overfiring often happens because a technician has replaced the original oil burner nozzle with a nozzle that has a higher capacity. A higher-capacity nozzle causes the oil burner to pump too much fuel into the combustion chamber. The result is more heat than the heat exchanger can absorb and distribute, and the excess heat escapes up the flue. Overfiring can also produce smoke from fuel oil that is not completely consumed in the combustion process. Replacing the burner nozzle with the appropriate size will remedy this situation.

Another less common cause of overfiring is increased oil pressure. Oil pressure is typically set at 100 psi (700 kPa). However, a confused or frustrated technician may have increased the pressure in a poor effort to fix one problem. If a thermostat is not satisfied quickly enough, an overfiring furnace may short cycle.

42.3.2 Stack Temperature Test

Stack temperature is an indicator of combustion efficiency. Stack temperatures vary from 300°F to 900°F (150°C to 500°C). Manufacturers provide average stack temperatures for individual furnaces. These average temperatures should be compared to operational readings, **Figure 42-6**.

Stack Temperature Test Procedure

Stack temperature is the temperature of the flue gas in the flue pipe minus the temperature of the combustion air. As a result, this procedure requires technicians to take two temperature measurements and perform a subtraction operation. Since combustion air enters most furnaces at room temperature, this combustion air temperature is essentially room temperature.

1. Insert a stem thermometer or combustion analyzer probe into a hole in the flue pipe.
2. Increase the system thermostat temperature and let the furnace run for at least five minutes.
3. After letting the furnace run for five minutes, write down the value measured by the stem thermometer. By this time, the temperature reading should be steady. If it is still rising, wait until it levels off before recording the temperature value: _____.
4. If combustion air is being drawn in from the furnace room, measure the ambient temperature of the room in which the furnace is located. If air is being drawn in from elsewhere, measure and record that value: _____.
5. Subtract the combustion air temperature from the flue temperature measurement and write down the answer: _____.
6. Review the manufacturer's recommended stack temperature for the equipment being tested. Are the manufacturer's number and the calculated number close in value? Perform any recommended service procedures provided by the manufacturer.

A high stack temperature reading indicates that an oil furnace is not operating at peak efficiency. The

Oil Furnace Combustion Efficiency

Net Stack Temperature (°F)	Net Stack Temperature (°C)	Combustion Efficiency (%)
1,000	538	65–69
800	427	70–73
600	316	76–79
400	204	82–84

Goodheart-Willcox Publisher

Figure 42-6. The average combustion efficiency of an oil furnace can be determined based on the net stack temperature.

Copyright Goodheart-Willcox Co., Inc.

causes of high stack temperature vary. Not enough heat may be transferring to the distribution medium, such as when the heat exchanger is insulated by soot deposits. Also, there may be too much draft through the combustion chamber, which reduces the time flue gas has to transfer heat. The furnace may be producing too much heat, such as when the oil pressure is set too high. In all these cases, excess heat is being lost up the flue, reducing the furnace's combustion efficiency.

42.3.3 Draft Test

Efficient, safe combustion in a furnace requires a proper draft. In a combustion heating system, ***draft*** is the movement of flue gas. Draft affects combustion as it allows for the supply of oxygen for burning. Draft also affects how quickly combustion gases pass through the heat exchanger, which plays a part in how much heat is transferred to the conditioned space and how much heat escapes through the flue. Draft depends on two things:

- The density of the flue gas compared to the density of the air.
- The pressure difference between the inside of the building and the outside of the building.

If the pressure difference is too great, flue gas will flow too quickly, allowing too much heat to escape out through the flue. If the pressure difference is too small, it may result in blowback that causes smoke and foul odors to enter the furnace room. To perform a ***draft test***, technicians use a ***draft gauge*** to measure the air pressure of the flue, which indicates the rate of flue gas flow. See **Figure 42-7**.

Draft is measured in inches of water column (in. WC). Oil furnaces usually require a chimney or flue draft of –0.02 in. WC to –0.03 in. WC. A technician must check the draft regulator prior to making any measurements or adjustments. A draft regulator is a device installed in the flue pipe that controls the amount of air drawn into the flue, usually from within the conditioned space. Often a draft regulator is a barometric damper with an adjustable weight used to determine the amount of airflow.

If the reading on the draft gauge is low, the weight should be moved to increase the draft. If the reading on the draft gauge is high, the weight should be moved to reduce the draft. Not all oil furnaces require draft testing. Oil furnaces with sealed combustion chambers often use a dedicated pipe for combustion air and do not always have a draft regulator.

Bacharach, Inc.

Figure 42-7. Draft gauge used to identify draft problems in residential and commercial heating systems.

Draft Test Procedure

In oil furnaces, draft measurements are taken in two locations: in the combustion chamber and in the flue. An ***overfire draft test*** measures the draft in the combustion chamber, and a ***flue draft test*** measures the draft in the flue. Overfire draft should be measured first.

1. Increase the system thermostat temperature and let the furnace run for at least five minutes.
2. The overfire draft measurement is taken through air louvers or a bolt hole in the furnace door. The flue draft measurement is taken in the flue pipe between the draft regulator and furnace.
3. Unwrap the draft gauge hose and place the draft gauge on a level surface.
4. Calibrate the draft gauge to zero using the adjustment on the gauge.
5. Insert the draft gauge hose through the hole in the door or the hole in the flue pipe.
6. After 30 seconds, record the draft value measurement: _____.
7. Compare the measured draft value with the manufacturer's recommended values.

Copyright Goodheart-Willcox Co., Inc.

If the measured draft value is below the recommended draft value, it means there is insufficient draft. Insufficient draft can occur when too many appliances, such as an oil furnace and a water heater, are connected to the same flue pipe. Obstructions such as soot, a bird's nest, and loose bricks in the chimney can restrict the flow of flue gases and cause insufficient draft as well. Homes with more airtight construction can also cause insufficient draft by preventing enough outside air from entering for combustion. This causes the pressure inside the building to drop below the pressure outside the building, which can result in blowback. Installing a pipe dedicated to bringing in fresh combustion air from outside is the best solution to this problem, **Figure 42-8**.

42.3.4 Smoke Test

In addition to performing a CO_2 test, a technician can also perform a smoke test as another method of gauging incomplete combustion. A ***smoke test*** involves drawing a sample of flue gas from the flue or combustion chamber while the furnace is running. This flue gas sample is passed through filter paper that becomes stained by the smoke. The stained paper is compared with premade samples, **Figure 42-9**.

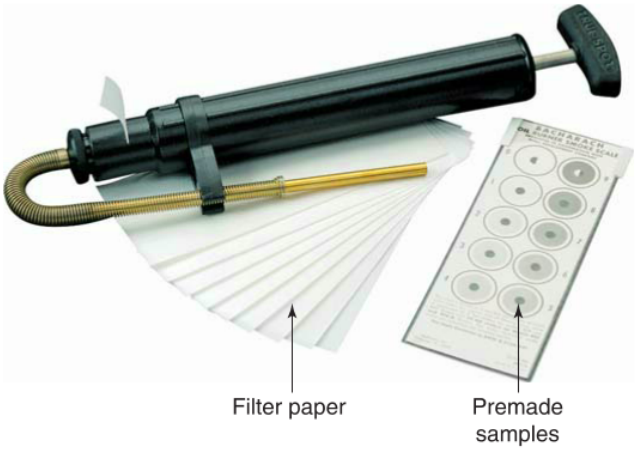

Bacharach, Inc.

Figure 42-9. The test pump, filter paper, and premade stain samples used to perform a smoke test.

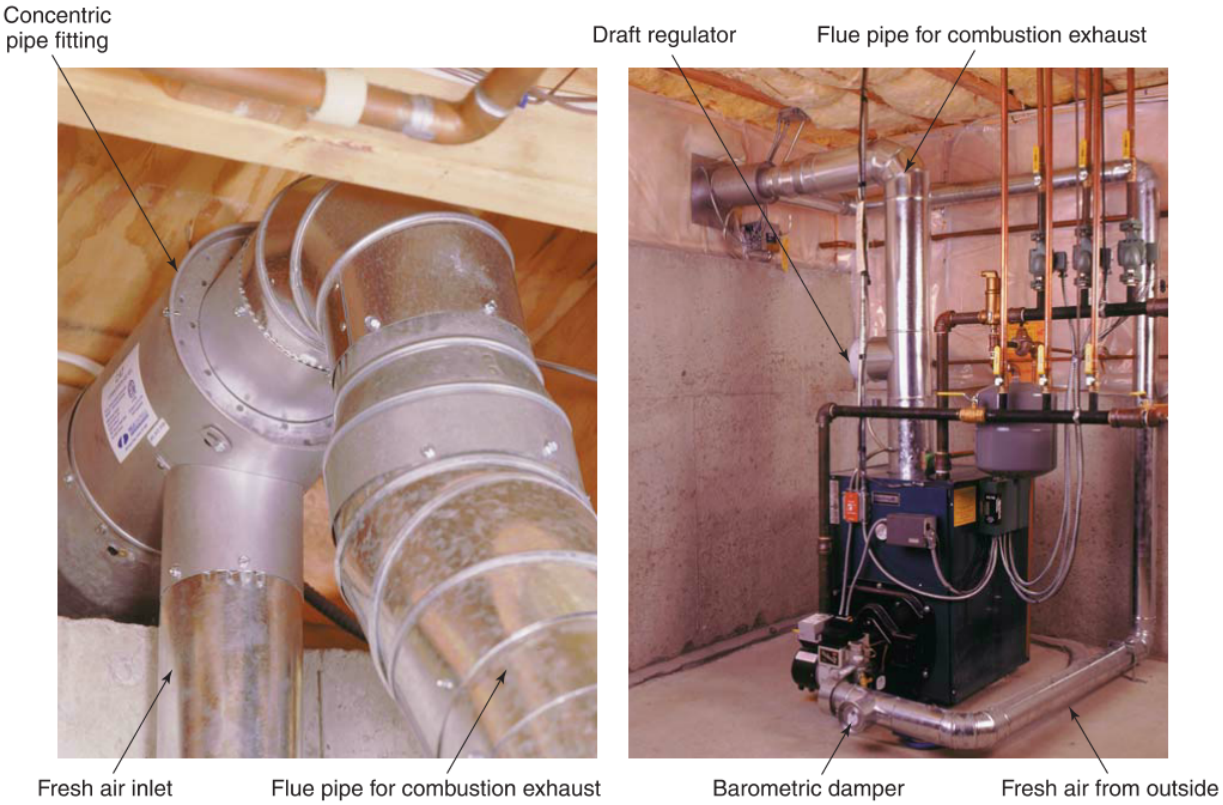

Field Controls, LLC

Figure 42-8. Using concentric piping (pipe-within-a-pipe), a single pipe body can supply fresh air for combustion and allow combustion exhaust to exit a building. This oil-fired boiler primarily draws in air from outside, but a barometric damper allows indoor air to be drawn in when necessary. A draft regulator is also installed on the flue pipe.

Copyright Goodheart-Willcox Co., Inc.

Incomplete combustion causes fuel oil that is not fully consumed to turn into smoke, which can accumulate as soot in the heat exchanger. This soot forms an insulating barrier that reduces the amount of heat transferred to the conditioned space. Incomplete combustion not only reduces heat exchanger efficiency, but also results in the production of less heat for distribution.

Smoke Test Procedure

Before beginning a smoke test, install an unused piece of filter paper into the test pump.

1. Increase the system thermostat temperature and let the furnace run for at least five minutes.
2. Insert a stem thermometer into a hole in the flue pipe or into the combustion chamber. Check manufacturer literature for proper placement.
3. Monitor the stem thermometer. After five minutes, the flue temperature should level off. If it continues to rise, let the furnace continue to run.
4. After the temperature has leveled off, remove the stem thermometer. While the furnace continues to run, use the test pump to take a sample of flue gas from the hole in the flue pipe.
5. Remove the filter paper and compare it with the premade samples.
6. Follow any additional directions from the manufacturer of the smoke tester.

42.4 Fuel Line Components

While oil burners and their accessories make up the main operating components of an oil-fired heating system, a number of other active and passive components also aid in operation. Many of these components are found along the fuel supply line between the fuel oil tank and the oil burner.

Code Alert

Oil Piping Systems

Chapter 8 of NFPA 31 contains information on acceptable piping types and materials, acceptable fittings, and piping system design. There is also specific coverage of fill piping, vent piping, supply and return piping, auxiliary tank piping, piping cross-connected tanks, pumps, valves, gauges, other equipment, and testing supply piping.

There are two fuel line configurations: one pipe and two pipe. A ***one-pipe fuel delivery system*** uses a single fuel line between the fuel oil tank and the oil burner. Since many modern fuel units (fuel oil pumps) are able to pump more fuel oil than the oil burner requires, internal bypass valves in the fuel unit separate the extra oil pumped from the oil required by the burner. The amount of fuel oil necessary for burner operation is directed to the oil burner, and the rest of the fuel oil is directed back to the fuel unit's inlet through the unit's internal bypass valves, **Figure 42-10**.

One-pipe fuel delivery systems have air problems more often than two-pipe fuel delivery systems. Despite being more likely to experience air-related problems, a one-pipe fuel delivery system has certain advantages when compared to a two-pipe system. One-pipe fuel delivery systems require about half as much tubing as two-pipe fuel delivery systems. With less tubing to run, one-pipe fuel delivery systems require less installation labor and less initial investment in materials. This also reduces the risk that the fuel oil will begin chemically reacting with the copper tubing to form sludge. Sludge can clog filters, nozzles, and strainers.

A ***two-pipe fuel delivery system*** has a supply line from the fuel oil tank to the oil burner and a separate return line running from the oil burner back to the fuel oil tank. Each fuel line runs the entire length between the fuel oil tank and the oil burner. As a result, two-pipe fuel delivery systems require the fuel unit to repeatedly pump large amounts of fuel oil long distances, **Figure 42-11**.

Fuel oil is repeatedly circulated from the fuel oil tank to the oil burner until it is eventually burned in the combustion chamber. An average fuel unit in a two-pipe fuel delivery system pumps fuel oil a rate of approximately 15 gallons per hour (gph). For an oil burner with a nozzle that sprays oil into the combustion chamber at a rate of 1 gph, 15 gallons of oil are pumped and filtered for every one gallon of oil burned. This is inefficient and unnecessary.

In addition, the return line of a two-pipe fuel delivery system is pressurized. Since an oil burner would not be affected by a leak in the return line, this type of leak can continue unnoticed for quite some time. If this were to occur, it could result in significant damage and contamination, requiring a major cleanup. The major benefit of a two-pipe fuel delivery system over a one-pipe system is that a two-pipe system is self-priming and needs no bleeding if opened. If a one-pipe fuel delivery system is opened or the amount of fuel oil in the fuel tank is too low, the system must be bled to get rid of any air in the

Copyright Goodheart-Willcox Co., Inc.

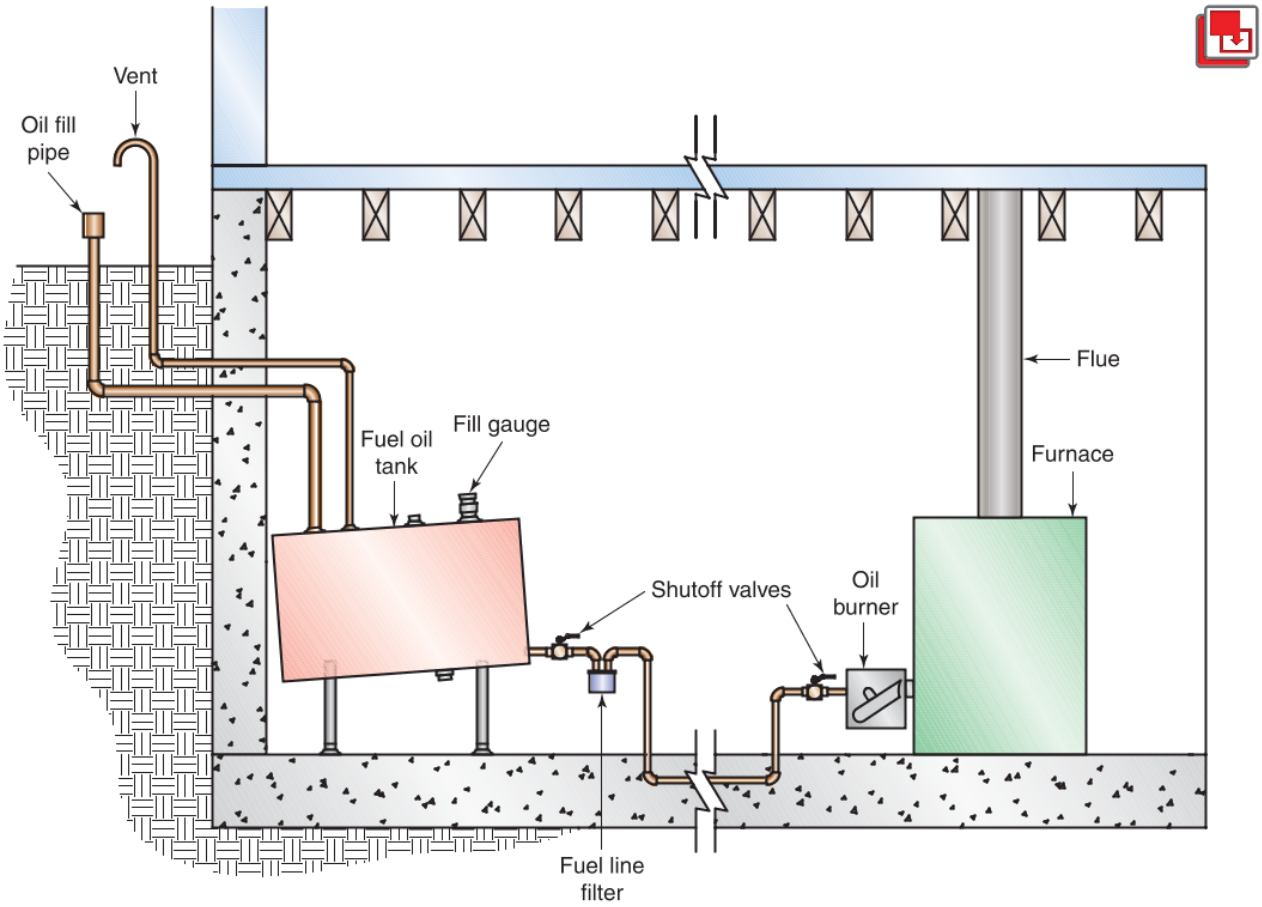

Goodheart-Willcox Publisher

Figure 42-10. A one-pipe fuel delivery system is used when the fuel oil tank is located above the oil burner, allowing oil to flow from the tank by gravity.

fuel line. For more information on fuel line materials and installation, see installation and service information later in this chapter.

Code Alert

Fuel Oil Piping and Storage Tanks

Local building codes specify requirements for fuel oil tank installation and removal. Codes also address acceptable equipment and materials for use in fuel supply, return, and vent piping; acceptable pipe joining methods; and gauge and valve requirements. Chapter 13 of the International Mechanical Code and Annex B of NFPA 31 cover acceptable tank installations.

42.4.1 Oil Deaerators

Some oil-fired heating systems suffer the symptoms of having air or other gases in the fuel line. These symptoms may be reduced oil pressure, smoky shutdowns, and oil burner lockouts. The system may just need to be bled to remove the air from the fuel line. However, if the air problems are persistent, the system may need to have an oil deaerator installed. An ***oil deaerator*** is a device that removes air and other gases from fuel oil, **Figure 42-12**.

Oil deaerators have three fuel line connections: an inlet from the fuel oil tank, an outlet to the oil burner's fuel unit, and a return inlet from the fuel unit. With the addition of a deaerator, a fuel unit may pump enough fuel oil to the burner and return the rest of the fuel oil to the deaerator to reduce air content. A deaerator's return inlet connection allows a one-pipe fuel delivery system to operate as a two-pipe fuel delivery system. Adding an oil deaerator to a system changes both one-pipe and two-pipe fuel delivery systems to the configuration shown in **Figure 42-13**.

Copyright Goodheart-Willcox Co., Inc.

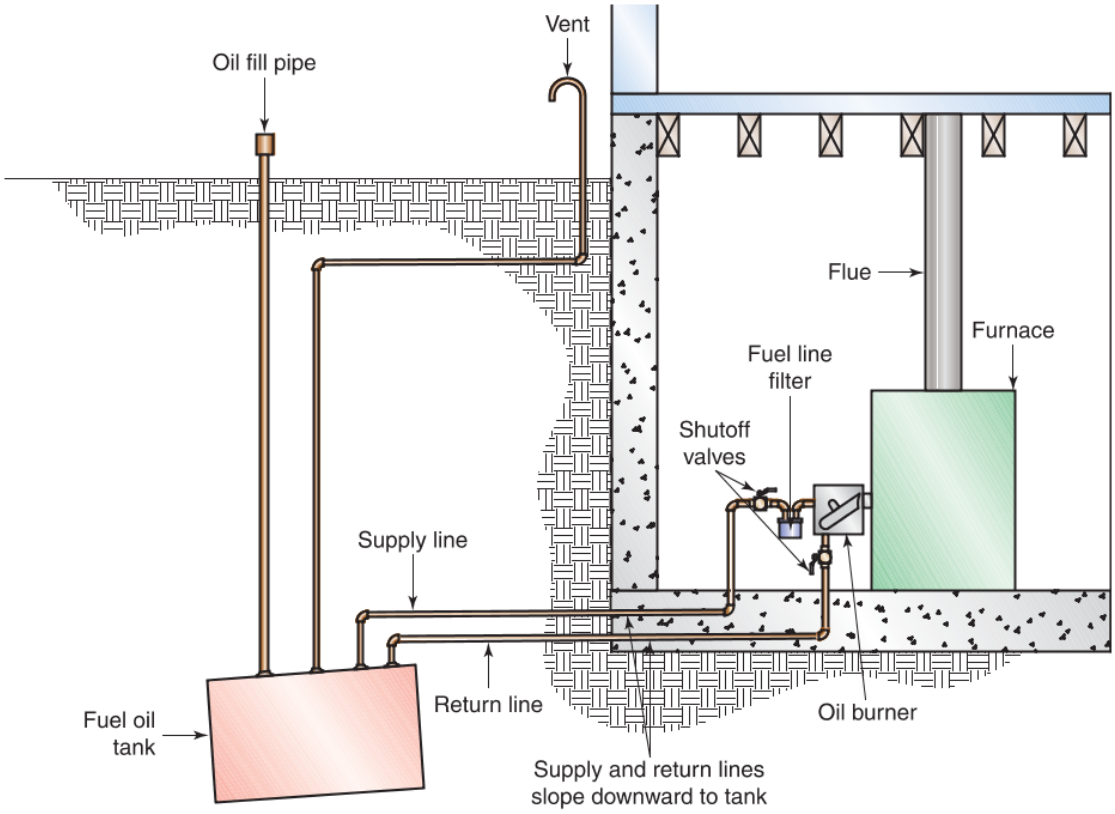

Goodheart-Willcox Publisher

Figure 42-11. A two-pipe fuel delivery system is used when the fuel oil tank is located below the oil burner. Fuel oil must be pumped to reach the oil burner.

Caution

Bypass Plug

When adding an oil deaerator to a one-pipe fuel delivery system, be sure to install the fuel unit's bypass plug. A fuel unit's ***bypass plug*** is a small plug that is threaded into the internal bypass between the fuel unit's inlet and return ports. It must be installed for a system with a deaerator to operate properly. The bypass plug stops excess fuel oil from flowing through the internal bypass back to the fuel unit's inlet, as it normally would in a one-pipe fuel delivery system. Instead, the bypass plug directs fuel oil out of the fuel unit's return port and to the return inlet on the oil deaerator.

An oil deaerator can be used in a two-pipe fuel delivery system to eliminate the long return line between the oil burner and fuel tank, avoiding the potential problems described in the previous section. Using a deaerator replaces the long return line to the tank with a shorter line to the deaerator, which is located closer to the oil burner. In two-pipe fuel delivery systems, the fuel unit's bypass plug should already be installed. Therefore, it should not be necessary to

Westwood Products, Inc.

Figure 42-12. Oil deaerators may vary in appearance but typically have three ports: an inlet from the fuel tank, an outlet to the fuel unit, and a return inlet from the fuel unit.

Copyright Goodheart-Willcox Co., Inc.

install a bypass plug in order to add a deaerator to a two-pipe fuel delivery system.

When an oil deaerator is added to a two-pipe fuel delivery system, the return line running from the oil burner to the fuel tank is disconnected and capped. The deaerator is connected in the supply line running from the fuel oil tank to the oil burner. Refer back to **Figure 42-13**. A short inlet line is run from the deaerator's outlet to the inlet port on the fuel unit. A short return line is then added from the fuel unit to the deaerator's return inlet. A fuel line filter should always be placed in the supply line between the fuel oil tank and the oil deaerator. The oil deaerator can become clogged and damaged if fuel oil entering it is not filtered.

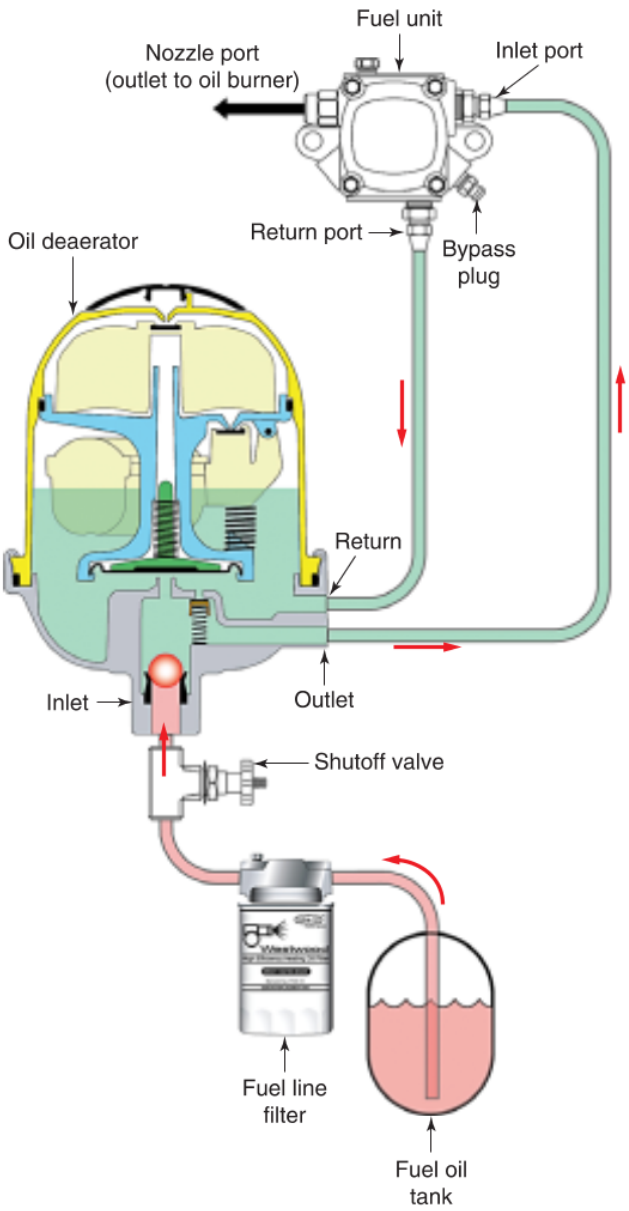

Westwood Products, Inc.

Figure 42-13. Regardless of whether an oil deaerator is installed in a one-pipe or two-pipe fuel delivery system, the piping configuration is the same.

Caution

Filter Placement

Fuel line filters should not be installed between the oil deaerator and the oil burner. If a filter or any other component between the deaerator and oil burner were to become clogged, pressure could rise high enough to damage deaerator seals to the point of leaking. Although some deaerators have built-in filters, a technician should check manufacturer specifications to see if an additional fuel line filter is needed or recommended.

42.4.2 Fuel Line Filters

A ***fuel line filter*** removes impurities from fuel oil before the fuel oil reaches the oil burner for combustion. By removing the impurities from fuel oil, a fuel line filter promotes a cleaner burning flame, **Figure 42-14**.

Some fuel line filters have screens designed to catch solid matter. Others are designed to stop

Westwood Products, Inc.

Figure 42-14. Fuel line filters with pressure gauges. A—Type of filter that is replaced once it becomes clogged. B—Filter with a top that unscrews so that its filtering element can be replaced when it becomes clogged.

Copyright Goodheart-Willcox Co., Inc.

water and sludge. These filters have inlets and outlets near the top of the canister, taking advantage of fuel oil's physical characteristic of being lighter than water and sludge. While water and sludge drop to the bottom of the canister, fuel oil flows on to the oil burner.

42.4.3 Booster Pumps

There are installations in which an oil burner's fuel unit cannot create enough suction to move fuel oil effectively from the fuel oil tank to the oil burner. This can happen if the fuel oil tank is excessively far from the oil burner, such as in larger commercial applications. It can also result from the fuel oil tank being considerably lower than the oil burner. Such installations require a ***booster pump***, which moves fuel oil from the tank to a fuel oil accumulator or reservoir tank nearer to the oil burner. From this reservoir tank, the fuel unit is able to supply fuel oil to the oil burner, **Figure 42-15**.

A booster pump should be located close to the fuel oil tank so that it functions to push, not pull, fuel oil to the reservoir tank. Low-voltage wiring is used between the oil burner and booster pump to control the booster pump motor relay.

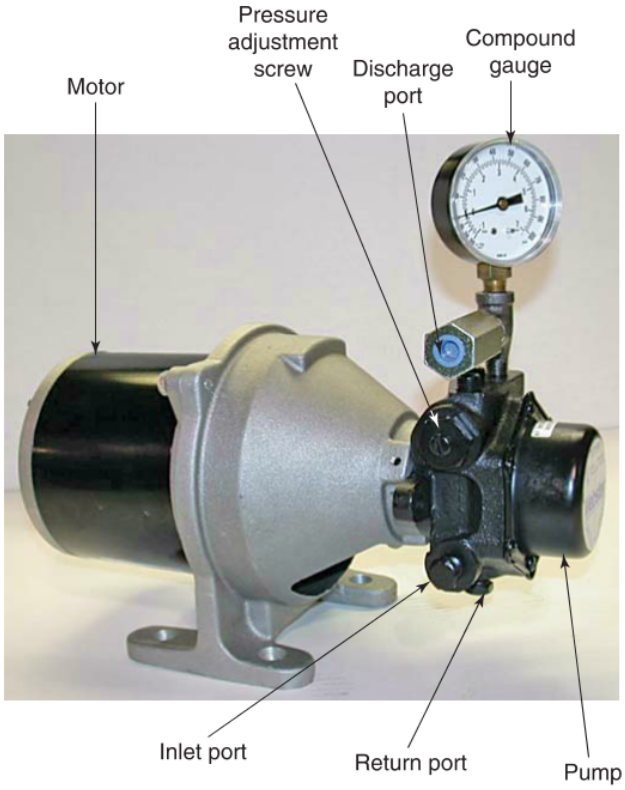

Webster Fuel Pumps and Valves

Figure 42-15. A booster pump is used to move fuel oil from a fuel oil tank to a reservoir tank located closer to the oil burner.

Caution

Vacuum Safety Valves

When installing a booster pump, do not use a check valve in the fuel unit's inlet line in a one-pipe fuel delivery system or in the unit's return line in a two-pipe fuel delivery system. Check valves in such locations modify flow and elevate pressures, which can cause damage to fuel unit seals. Instead, install a vacuum safety valve in the fuel unit's inlet line to provide pressure relief for both the fuel unit and reservoir tank, **Figure 42-16**.

42.5 Oil Burners

An ***oil burner*** is a device that controls the burning of fuel oil to produce heat for a conditioned space using an oil-fired appliance. There are two types of oil burners: pot burners and gun burners. A ***pot burner*** is an oil burner that maintains a flame using a carburetor to feed the flame with vaporized fuel oil rising from a small pool of liquid fuel oil. Pot burners are rarely used, but they can be found on some older oil-fired unit heaters. The most widely used oil burners are gun burners.

A ***gun burner*** is an oil burner that uses a motor to operate a fan and a pump in order to deliver a pressurized mixture of air and fuel oil to a flame that is directed into a combustion chamber, **Figure 42-17**.

By forcing fuel oil through a specifically sized nozzle orifice under pressure, a gun burner atomizes the fuel oil, breaking it into finely divided particles. The fuel oil droplets are mixed with air from a fan and directed into the combustion chamber. Electrodes provide electric arcs that ignite the mixture of air and fuel oil.

Gun burners are designed to operate at either low pressure or high pressure. Older gun burners operate at a low pressure around 10 psi (70 kPa). Most gun burners manufactured since the 1960s operate at a high pressure. High pressures range from 100 psi to 300 psi (700 kPa to 2100 kPa). In most cases, when technicians use the term *oil burner*, they are referring to a high-pressure gun burner.

42.5.1 Oil Burner Construction

Oil burners contain a variety of components that contribute to producing an ideal flame. HVACR technicians must be familiar with oil burner parts, know how they are constructed into a single unit, and

Copyright Goodheart-Willcox Co., Inc.

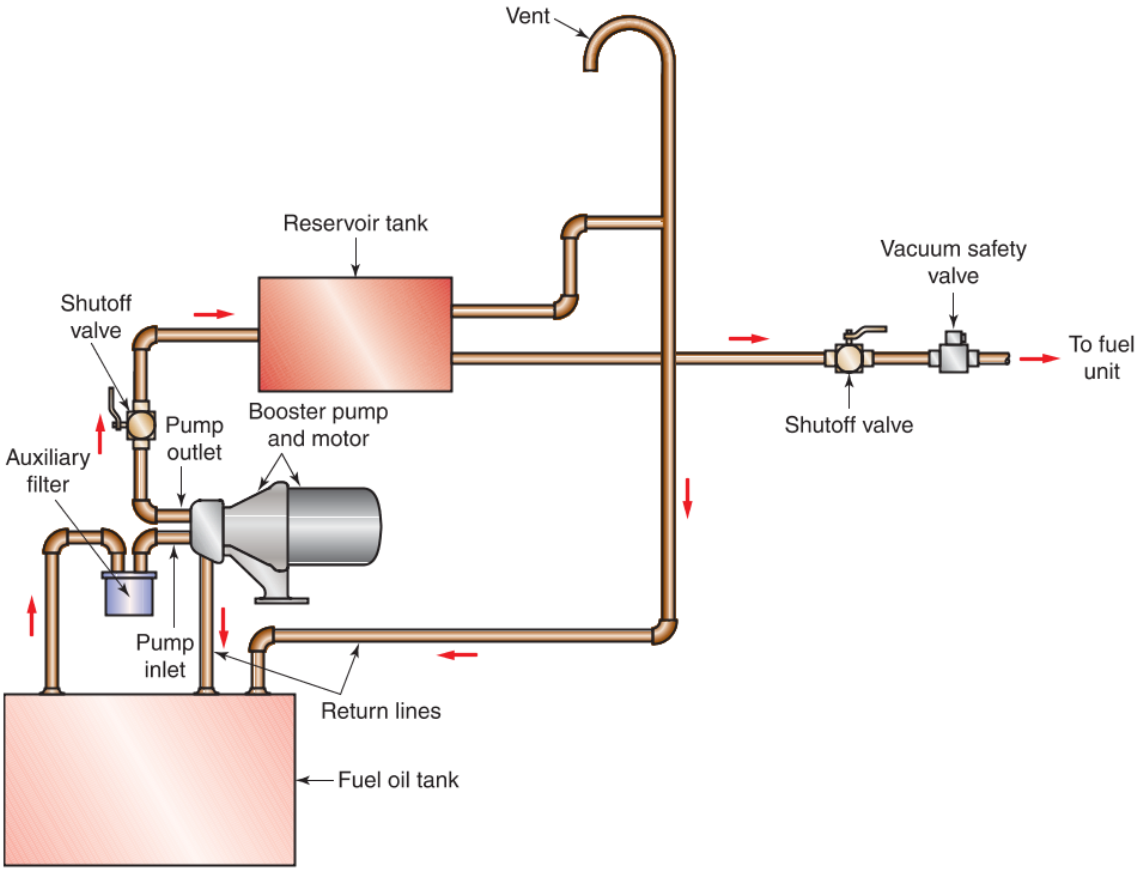

Goodheart-Willcox Publisher

Figure 42-16. A booster pump correctly installed along with a reservoir tank and using a vacuum safety valve, instead of a check valve.

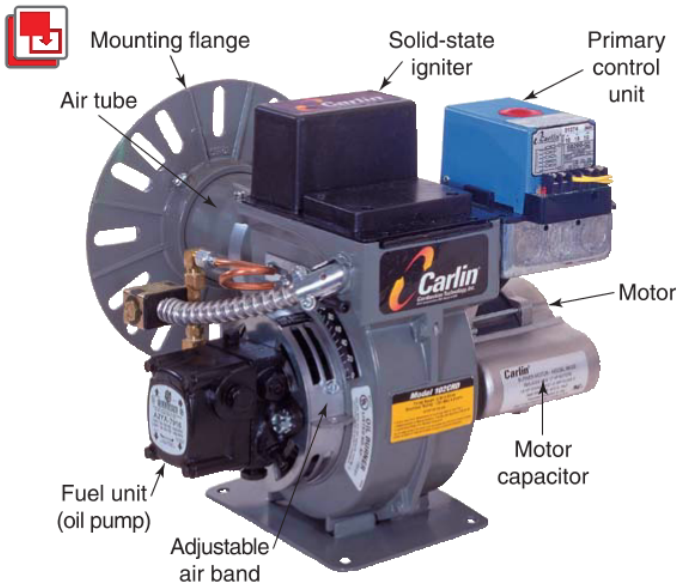

Carlin Combustion Technology, Inc.

Figure 42-17. The main components of a typical gun burner used in residential furnaces.

understand what these parts do in the combustion process, **Figure 42-18**.

An ***air tube***, also called a *blast tube*, is the passage through which air from the burner fan is blown into the combustion chamber. It contains many oil burner components, as shown in **Figure 42-19**.

Fuel oil is pumped through the fuel line to a burner nozzle located at the end of the air tube. Electrodes used for ignition stretch through the air tube and are positioned near the front of the burner nozzle. A ***static pressure disk*** is mounted inside the air tube and disturbs airflow from the burner fan to create air turbulence for mixing air and fuel oil. A static pressure disk may also be called a *static disk*.

One of the most important components of an oil burner is the combustion head. A ***combustion head*** is a plate with slots and holes that are designed to promote ideal combustion by directing the airflow into the combustion chamber. It is located at the end of the air tube, dividing the space between the oil burner and combustion chamber. See **Figure 42-20**.

Copyright Goodheart-Willcox Co., Inc.

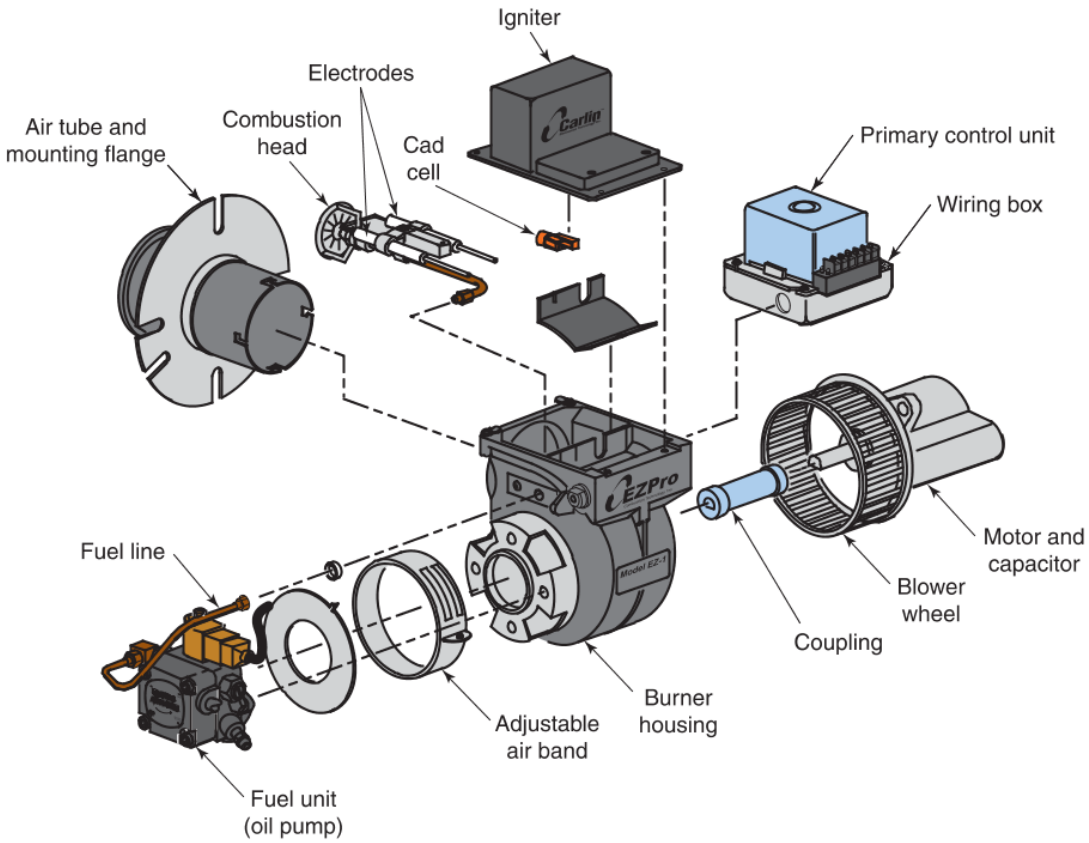

Carlin Combustion Technology, Inc.

Figure 42-18. Assembly drawing of an oil burner showing the burner components and how they all fit together into a single unit.

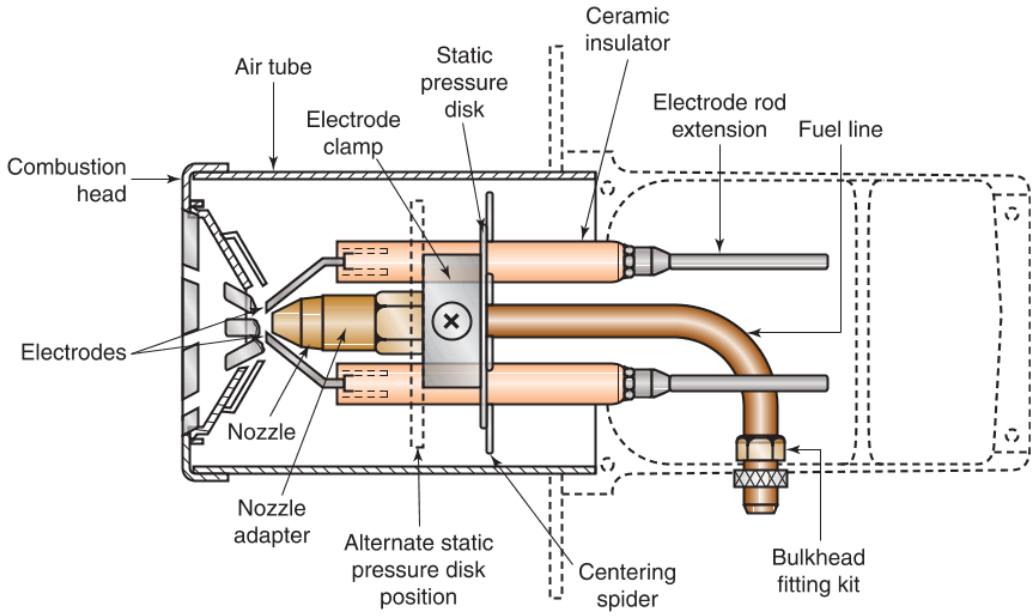

R.W. Beckett Corporation

Figure 42-19. Cutaway of a gun burner air tube showing the burner nozzle and electrode assembly.

Copyright Goodheart-Willcox Co., Inc.

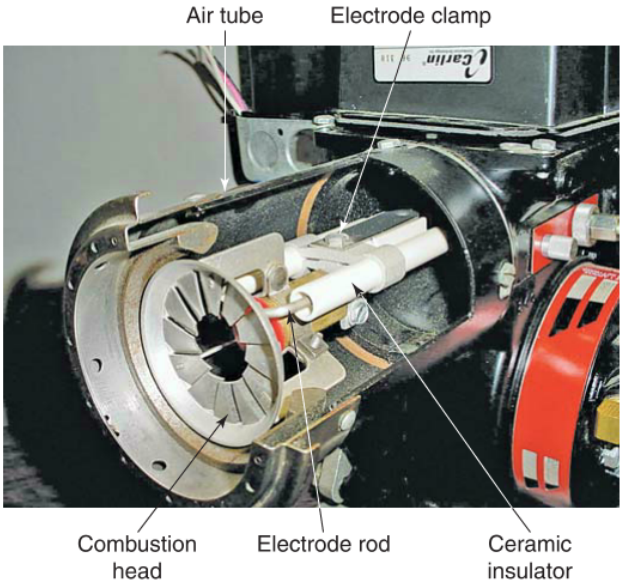

Carlin Combustion Technology, Inc.

Figure 42-20. The combustion head is located at the end of the air tube.

Pro Tip

Combustion Head Terminology

Combustion heads are known by several other names in the HVACR industry. Other terms include *end cone*, *burner head*, *fire ring*, and *retention ring*. Be aware of these different terms while speaking with parts clerks and other technicians.

The combustion head design determines whether an oil burner is a standard model or a flame retention model. A ***standard oil burner*** has a combustion head that directs combustion air to produce a somewhat lazy and unrestrained flame. A ***flame retention oil burner*** has a combustion head that directs combustion air in a manner that retains its flame, making it more compact, more efficient, cleaner, and hotter, **Figure 42-21**.

A flame retention oil burner feeds oil to the burner nozzle at high pressures, ranging from 100 psi to 300 psi (700 kPa to 2100 kPa). Air pumped through the air tube flows around every side of the nozzle as the air enters the combustion chamber. Usually, the air is

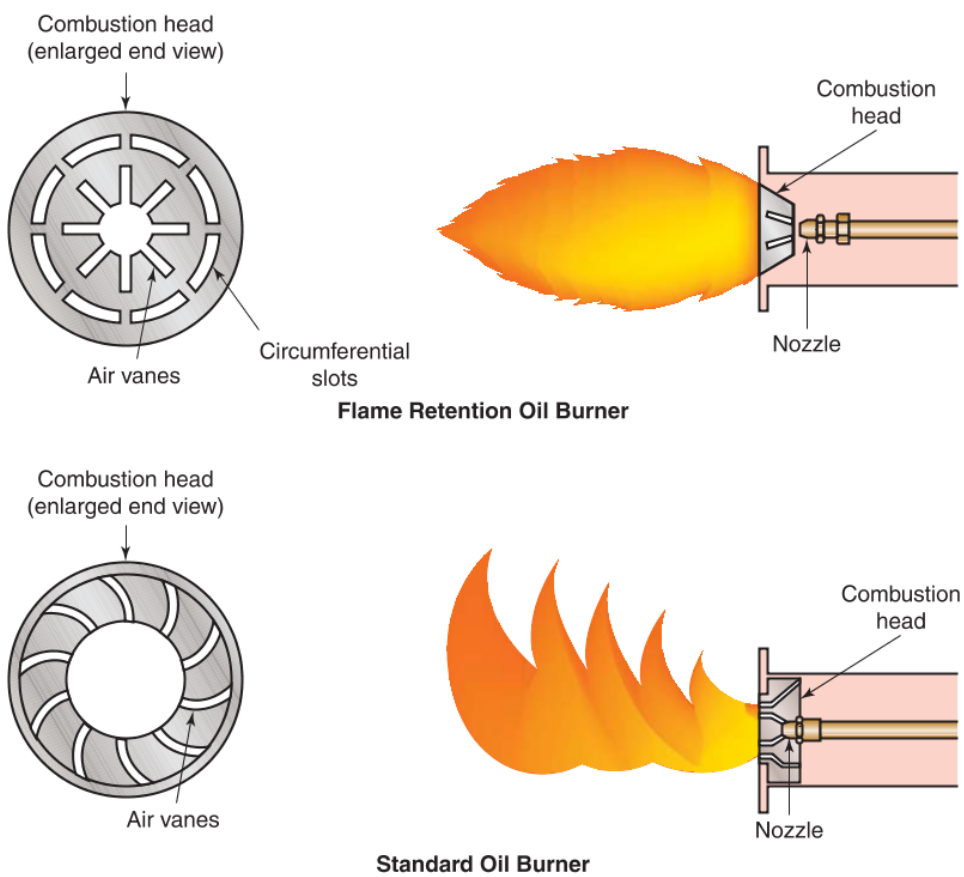

Goodheart-Willcox Publisher

Figure 42-21. The flame produced by a flame retention oil burner is more compact and controlled than the flame produced by a standard oil burner.

Copyright Goodheart-Willcox Co., Inc.

twisted in one direction. The spray of fuel oil is given a twist in the opposite direction by the nozzle. Flame retention combustion heads are now widely used to replace standard combustion heads during service calls for maintenance and repair.

42.5.2 Electrodes

Two electrodes located near the front of the oil burner nozzle in the air tube conduct electric current provided by an ignition transformer or solid-state igniter to produce a high-voltage spark. The electrodes are made of stainless steel and mounted in ceramic insulators. No part of an electrode should be closer than 1/4″ (6 mm) to any metal part.

There are three important electrode-related gaps that need to be set in an oil burner. The ***electrode gap*** is the distance between the ends of each of the electrode tips. This should be 1/8″ to 3/16″ (3 mm to 5 mm). The ***above gap*** is the vertical distance between the center of the nozzle and the electrode tips. The electrode tips should be approximately 1/2″ to 5/8″ (13 mm to 16 mm) above the nozzle. The ***front gap*** is the horizontal distance between the front tip of the nozzle and the tips of the electrodes. For nozzles with a spray angle greater than 45°, the front gap should be approximately 1/2″ (13 mm). For 30° nozzles, the front gap should be 5/16″ (8 mm). See **Figure 42-22**. For each make and model of furnace, it is best to verify electrode and nozzle gap distances with the manufacturer's service manual.

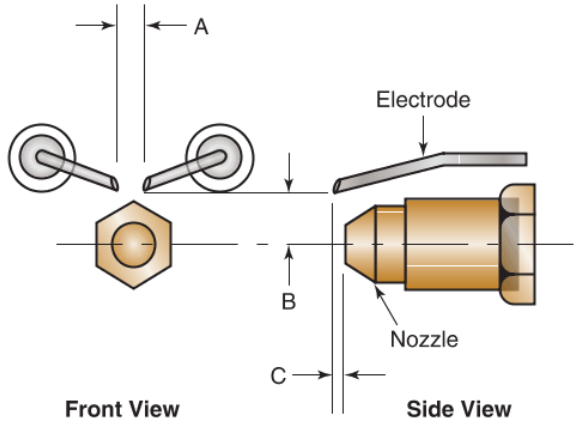

R.W. Beckett Corporation

Figure 42-22. Oil burner nozzle and electrode gaps. A—The electrode gap is the distance between the two electrode tips. B—The above gap is the vertical distance between the electrode tips and the center of the nozzle. C—The front gap is the horizontal distance from the front of the nozzle to the tips of the electrodes.

Caution

Insulator Arcing

When servicing an oil furnace, make sure the electrode insulators are clean and free of soot. Soot is composed of carbon, which conducts electricity well. If soot builds up on insulators, the high voltage for the ignition spark can short across the insulators along areas covered in soot.

42.5.3 Oil Burner Nozzles

An ***oil burner nozzle*** is a metal piece with an orifice that controls the amount of fuel oil passing from the air tube into the combustion chamber. Nozzles are made of stainless steel or a combination of stainless steel and brass. These materials allow them to withstand the pressures, temperatures, and variety of fuels to which they are exposed. Each nozzle is supplied with a fine filter at its inlet. The filter is designed to prevent the possibility of dirt entering and plugging the nozzle, **Figure 42-23**.

Each nozzle is designed with very detailed specifications. Such precision is necessary for a nozzle to accomplish its three main roles: atomizing, metering, and patterning. Breaking up the fuel oil into tiny droplets is called ***atomization***. Since fuel oil will not burn as a liquid, atomization is used to cause the oil to vaporize rapidly so that it can be ignited. Fuel oil moving through an oil burner nozzle travels through very small holes. These holes are drilled at an angle to the nozzle. As the fuel oil travels through these holes, it is broken down into tiny droplets and given a twisting movement. Turbulent air mixes with the oil droplets as they leave the nozzle and enter the combustion chamber, where they are ignited to form a flame.

The amount of fuel oil delivered to the combustion chamber must be regulated. The amount of fuel is measured in gallons per hour (gph) at 100 psi. Nozzle orifice size and fuel oil pressure determine the rate at which fuel oil is delivered to the combustion chamber and, consequently, the rate at which heat is produced. The size of the burner nozzle must match the heating requirements of the conditioned space. If a nozzle is too small, the oil burner may not heat the space adequately. If a nozzle is too large, the oil burner may short cycle.

Directing atomized fuel oil droplets into the combustion chamber in a uniform spray pattern and at the correct spray angle is called ***patterning***. The correct spray pattern and angle is dependent on the design of the burner as well as the shape of the combustion chamber. Spray angles range from 30° to 90°. Round or square combustion chambers are usually fired with

Copyright Goodheart-Willcox Co., Inc.

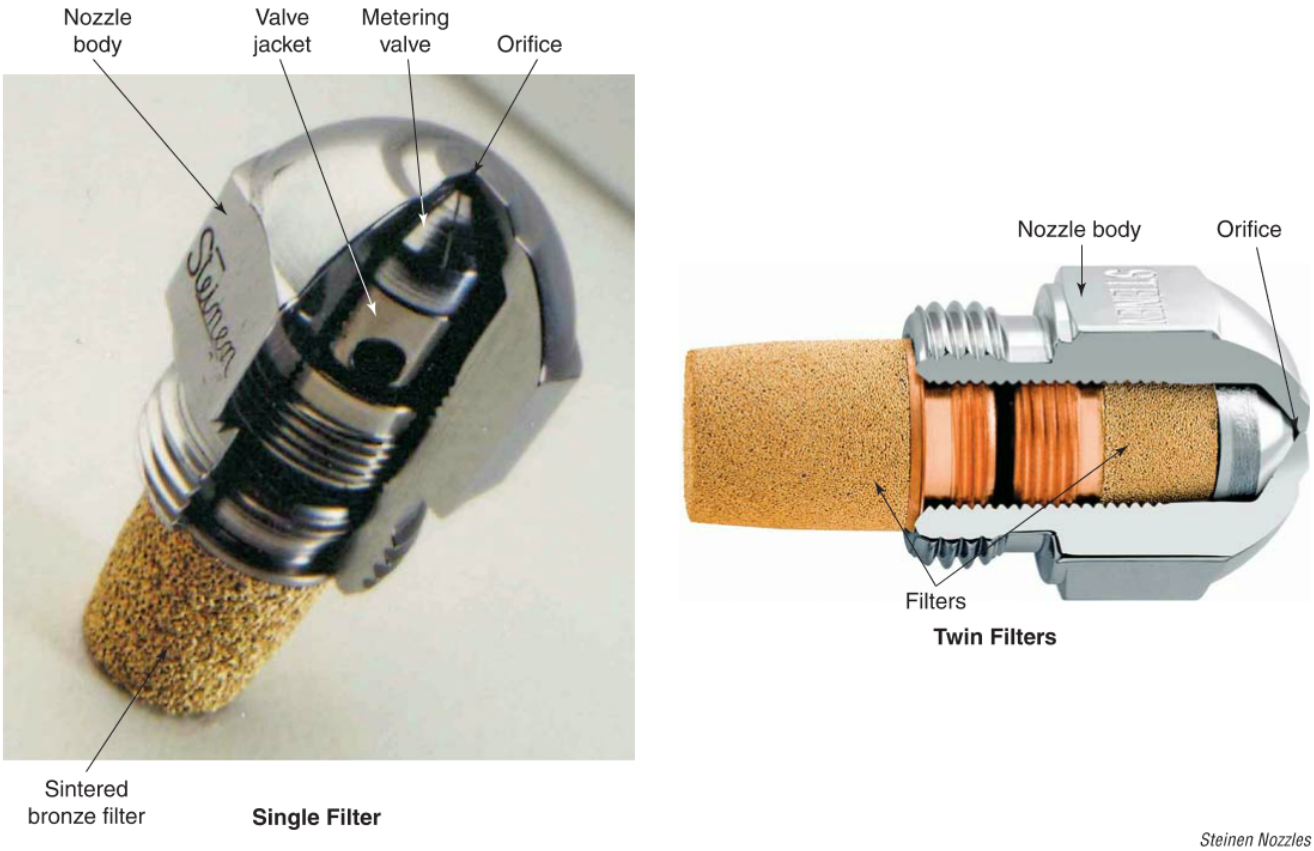

Steinen Nozzles

Figure 42-23. Oil burner nozzles may have a single filter or twin filters. Twin-filter nozzles provide increased filtering capacity.

70°–90° nozzles. Combustion chambers that are long and narrow are usually fired with 30°–70° solid cone nozzles. Fuel oil spray should not reach the electrodes or sides of the combustion chamber.

Burner nozzles are also made with different fuel oil spray patterns. Manufacturers assign identification letters or numbers to each nozzle. These numbers and letters vary. When replacing a nozzle made by one manufacturer with a nozzle made by a different manufacturer, refer to a manufacturer chart to cross-reference nozzles. Although there are many patterns available, the three most commonly used patterns are hollow cone (Type A), solid cone (Type B), and semi-solid cone (Type W), **Figure 42-24**.

A solid cone nozzle broadcasts fuel oil droplets uniformly throughout the cone shape. This nozzle is best when the air pattern of the burner is heavy in the center or if a long fire is required in the combustion

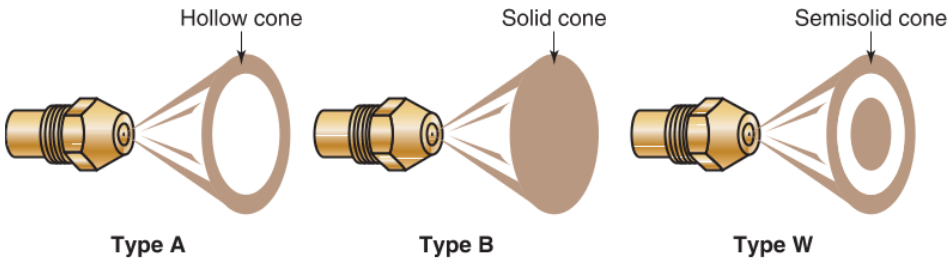

NORA

Figure 42-24. Nozzle construction determines the fuel oil spray pattern. Hollow, solid, and semisolid cones are the three main spray patterns.

Copyright Goodheart-Willcox Co., Inc.

chamber. Solid cone nozzles are most often used for oil burners firing at a rate greater than 1 gph.

A hollow cone nozzle has little or no droplets in the center and the greatest amount of droplets at the outer edge of the spray. These nozzles are used for burners with a low firing rate, such as those firing at less than 1 gph. Hollow cone nozzle flames are often quieter than solid cone nozzles.

A semisolid cone nozzle is used with burners that can adapt to either solid or hollow spray patterns. Most manufacturers designate the appropriate nozzle to be used. A technician should follow this recommendation on nozzle selection and never install a nozzle with a firing rate higher than recommended.

42.5.4 Oil Burner Motors

An ***oil burner motor*** provides power for turning the fan and fuel unit (oil pump) in an oil burner assembly. Oil burner motors are either split-phase motors or permanent split capacitor (PSC) motors. The motor is mounted to the burner housing using a two-, three-, or four-bolt flange. The oil burner fan, which is attached to the motor shaft, can be easily accessed by removing the flange bolts. If a motor has to be replaced, it must be replaced with a new motor that has the same rotation direction, frame size, and rated full-load speed (RPM). An oil burner motor uses 120 V, 60 Hz electricity and is electrically connected to the oil burner's primary control unit, **Figure 42-25**.

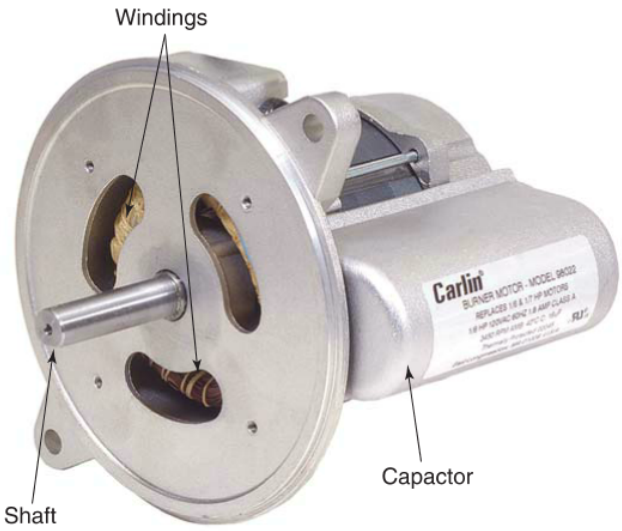

Carlin Combustion Technology, Inc.

Figure 42-25. An oil burner motor.

42.5.5 Oil Burner Fans

An ***oil burner fan,*** or blower wheel, provides combustion air for the flame in the combustion chamber. The fan must also provide some excess air to ensure enough oxygen for complete combustion of the fuel oil. Designing the fan to deliver excess air also helps to ensure that complete combustion is maintained as the furnace gradually becomes dirty with use, reducing the fan's efficiency. Most oil burner fans have a squirrel cage design.

An ***adjustable air band*** is a metal band on an oil burner that is used to regulate the amount of air the burner fan can draw in and blow through the air tube. Air bands are also called *air inlet collars*, **Figure 42-26**.

Pro Tip

Air Band Adjustment

Adjusting an air band to obtain a proper flame can be misleading. A flame may look like it needs more air when it does not. This may be due to a dirty burner nozzle or fuel oil leakage during the Off cycle. Only adjust airflow after analyzing the products of combustion using test equipment, such as a combustion analyzer or combustion testing kit.

Carlin Combustion Technology, Inc.

Figure 42-26. As the air band is rotated, the indicator arrow points to the scale, which indicates the burner's airflow setting. The airflow setting is expressed as a percentage of total potential airflow.

Copyright Goodheart-Willcox Co., Inc.

42.5.6 Fuel Units

A ***fuel unit*** is an oil burner subsystem consisting of a motor-driven pump that performs three tasks. Fuel units move fuel oil from the fuel oil tank to the oil burner, act as a secondary filter after the fuel line filter, and regulate the pressure of the fuel oil pumped to the oil burner. Like gas valves in gas furnaces, fuel oil pumps have developed into more complicated devices and taken on more roles. Just as gas valves have grown in function to become known as combination gas valves, fuel oil pumps have grown in function to become known as fuel units. See **Figure 42-27**.

A coupling connects the shaft of the oil burner motor to the shaft of the fuel unit pump. Therefore, the speed at which the oil burner motor rotates is the same speed at which the fuel unit pump rotates. Most fuel unit pumps are built to be driven at 3450 RPM. Some are designed to run at 1725 RPM while others can be driven at either speed. Fuel units are often preset to deliver fuel oil at 100 psi (700 kPa), which is the same pressure at which most oil burner nozzles are rated. Most fuel units have an adjustable oil pressure setting.

Fuel Unit Pumps

The most prominent part of a fuel unit is its pump. There are two types of fuel unit pumps: single stage and two stage. Selection of a single-stage pump or two-stage pump is determined by the limitations of the fuel oil itself. When fuel oil is subjected to excessive vacuum pressure, it starts to foam and change into a vapor. Oil foaming negatively affects system efficiency. Single-stage pumps can be used in both one-pipe and two-pipe fuel delivery systems where the pump's inlet vacuum pressure does not exceed 12 in. Hg vacuum. Two-stage pumps can operate under a vacuum pressure as high as 17 in. Hg vacuum. As a result, two-stage pumps create greater suction than single-stage pumps and are used to pull fuel oil from fuel oil tanks that are located far away from or below the oil burner.

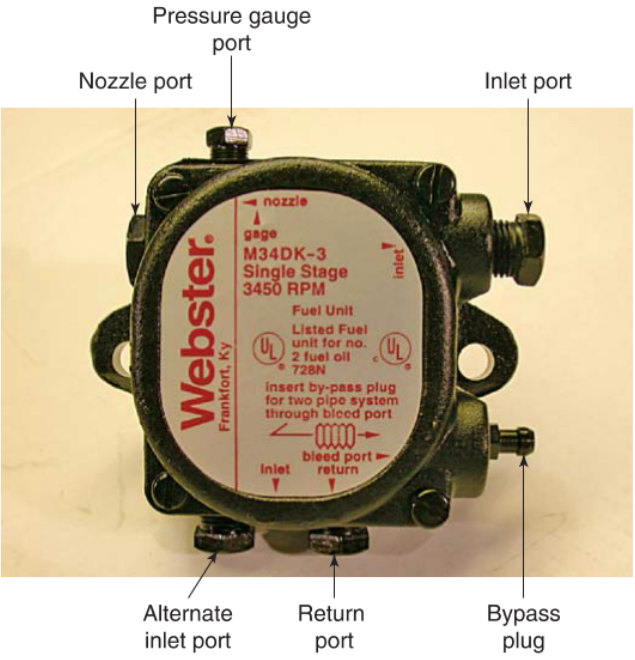

Webster Fuel Pumps and Valves

Figure 42-27. A single-stage fuel unit that runs at 3450 RPM. Each port is identified using arrows.

Single-stage pump operation is shown in **Figure 42-28**. Fuel oil enters the single-stage unit and fills the front chamber. Rotating blades filter the fuel oil as it passes from the front chamber to the suction side of the gears. The oil then goes from the lower suction side to the upper pressure side of the gears and flows into the pressure-regulating valve. At a predetermined pressure, the valve piston moves, forcing the fuel oil to flow out the nozzle port. In a one-pipe fuel delivery system, surplus fuel oil returns to the front chamber through the surplus return passage. If a single-stage pump is used in a two-pipe fuel delivery system, surplus fuel oil is piped back to the fuel oil tank through the return port.

Two-stage pumps have two sets of gears. One set pulls fuel oil from the fuel oil tank into a strainer. The second set of gears removes fuel oil from the strainer chamber and pumps it to the nozzle port. Excess fuel oil is returned to the strainer chamber in some pumps or returned back to the fuel oil tank in others.

Fuel Unit Operation

To quickly and cleanly end oil burner operation, fuel units use a solenoid valve for quick fuel oil shutoff. This prevents residual oil from being pumped, which can cause soot or smoke formation. The solenoid valve is located at the fuel unit's nozzle port and is wired in parallel with the oil burner motor. Therefore, as soon as a system thermostat signal tells the oil burner to stop operation, the motor stops driving the pump and the solenoid valve closes to block fuel oil from moving into the combustion chamber. The power requirements for these solenoid valves vary, and some manufacturers produce solenoid valves that can operate at different voltage settings. Always check before replacing or servicing.

Sensing devices are also installed to minimize the spraying of fuel oil into the furnace when there is no flame. These sensing devices, such as stack relays and cad cell relays, stop fuel unit operation in case of an ignition failure or if the flame goes out. They often work with the primary control unit, which is discussed in greater detail in the following section.

Copyright Goodheart-Willcox Co., Inc.

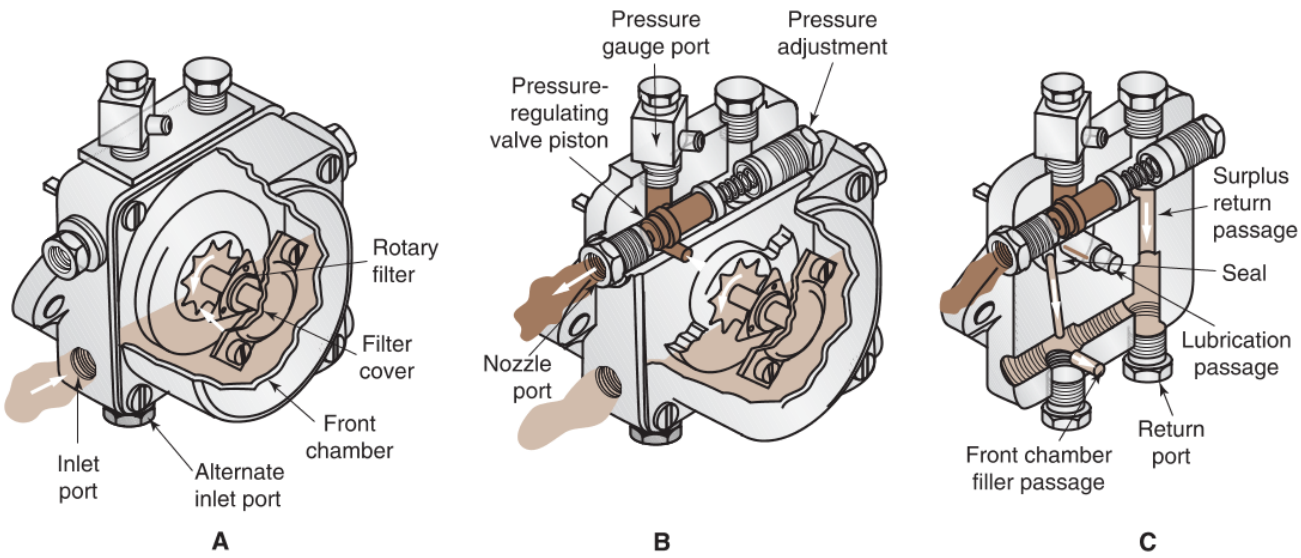

Webster Fuel Pumps and Valves

Figure 42-28. Single-stage pump operation. A—Fuel oil is drawn through the inlet port into a storage chamber in the front of the fuel unit. B—A gear set pumps the oil to a certain pressure, and a pressure-regulating valve directs some of it to the oil burner nozzle for combustion. C—Surplus fuel oil is bypassed to the pump inlet or is piped back to the fuel oil tank through the return port.

42.6 Primary Control Units

Each and every oil furnace is operated by its ***primary control unit***, which is a type of control device that starts and stops the oil furnace while monitoring variables for safe operation. A primary control unit is mounted on an oil burner and is often labeled with the words *Primary Control*. Some primary control units include an internal troubleshooting feature that causes an LED light to flash in case of an error, **Figure 42-29**.

Start-up begins with a call for heat from a system thermostat. When the thermostat places a call for heat, the primary control unit signals each device in a specific sequence. First, the primary control unit turns on the burner motor and ignition transformer. This initiates the flow of air and fuel oil and ignites the flame.

During operation, the primary control unit relies on sensing devices to detect the flame. The two types of oil furnace sensing devices are stack relays and cad cell relays. A stack relay senses with a heat-sensitive bimetal element, and a cad cell relay senses with a light-sensitive cad cell. If the oil burner does not ignite or if the flame is extinguished, the primary control unit's sensing device will trip. A tripped sensing device requires manually resetting the control unit.

Honeywell, Inc.

Figure 42-29. A primary control unit is responsible for turning an oil burner on and off.

Copyright Goodheart-Willcox Co., Inc.

Caution

Resetting Primary Control Units

Prior to pushing a primary control's reset button, always check that the combustion chamber is not saturated with oil.

Stopping can be caused by several events. For normal operation, stopping occurs when the desired temperature has been met and the thermostat no longer calls for heat. Stopping can also occur due to the control unit sensing a furnace malfunction, such as the flue temperature rising too high or the flame going out.

Pro Tip

Gas and Oil Furnace Controls

An oil furnace primary control unit is equivalent to a gas furnace ignition control module. Both devices sequence the operation of the individual components in a furnace to control ignition and monitor operation. Primary control units are used in oil furnaces, and ignition control modules are used in gas furnaces.

42.6.1 Stack Relays

Older oil furnaces may use a stack relay rather than a cad cell as the primary sensing device. A ***stack relay*** is a heat-sensing device that consists of a bimetal element, at least one relay coil, a heat-operated safety switch, and the different electrical contacts that the bimetal element and relay coil operate. A stack relay may also be called a *stack switch*. It is mounted in the flue of an oil furnace close to the exhaust opening where it senses the heat produced by fuel oil combustion. See **Figure 42-30**.

Caution

Stack Relay Location

There should be no dampers or other devices between a furnace's flue gas and a stack relay's bimetal element. Blocking a stack relay's sensing element can disrupt oil furnace operation.

An ignited flame in a combustion chamber produces heat that a stack relay senses. If a stack relay does not sense successful ignition (usually within 15 seconds), it will open an electrical contact to cut the power to the oil burner. This shuts off the system and avoids a potentially dangerous condition.

The bimetal element of a stack relay is the stack relay's heat-sensing component. Heat from an oil furnace flame deforms the bimetal element. This movement is used to open and close at least two sets of electrical contacts: hot contacts and cold contacts. The hot contacts close when they are hot, and the cold contacts close when they are cold.

When an oil furnace operates and produces enough heat, the bimetal element reacts by closing the hot contacts and opening the cold contacts. After an oil furnace has stopped operating, accumulated heat begins to dissipate. After the furnace has lost enough heat, the bimetal element returns to its original shape, so that the hot contacts open, and the cold contacts close. During most of the Off cycle, the cold contacts remain closed, and the hot contacts remain open.

The hot and cold contacts are not the only electrical contacts in a stack relay. The relay coil (1K) in a stack relay also controls at least two sets of contacts (1K1 and 1K2). When a thermostat calls for heat by closing its switch, the relay coil responds by closing two sets of contacts. One set of relay contacts (1K1) closes to provide power to the oil burner, ignition circuit, and oil burner solenoid valve. This pumping and ignition of the fuel oil begins the combustion process. The other set of relay coil contacts (1K2) also closes but does not yet conduct any current, **Figure 42-31A**.

As fuel oil burns and warms the flue, the heat produced deforms the bimetal element, which closes the hot contacts and opens the cold contacts. Once the hot contacts have closed, current begins to flow through the hot contacts and the second set of relay coil contacts (1K2) and continues to flow through the relay coil (1K), **Figure 42-31B**.

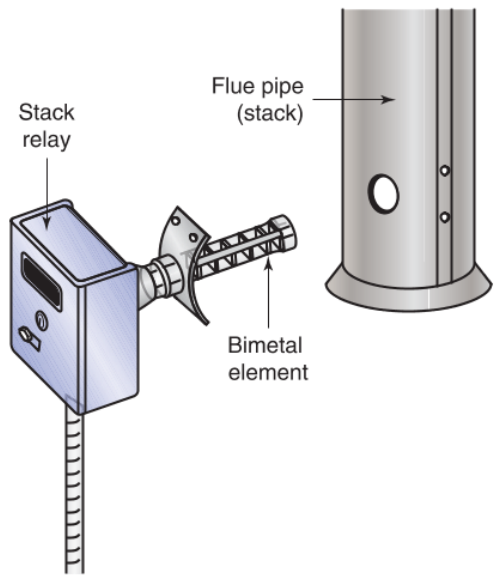

Goodheart-Willcox Publisher

Figure 42-30. A stack relay is easily identifiable by its long bimetal element emerging from its back. The bimetal element is installed in the flue pipe where it senses the heat produced by the combustion of fuel oil.

Copyright Goodheart-Willcox Co., Inc.

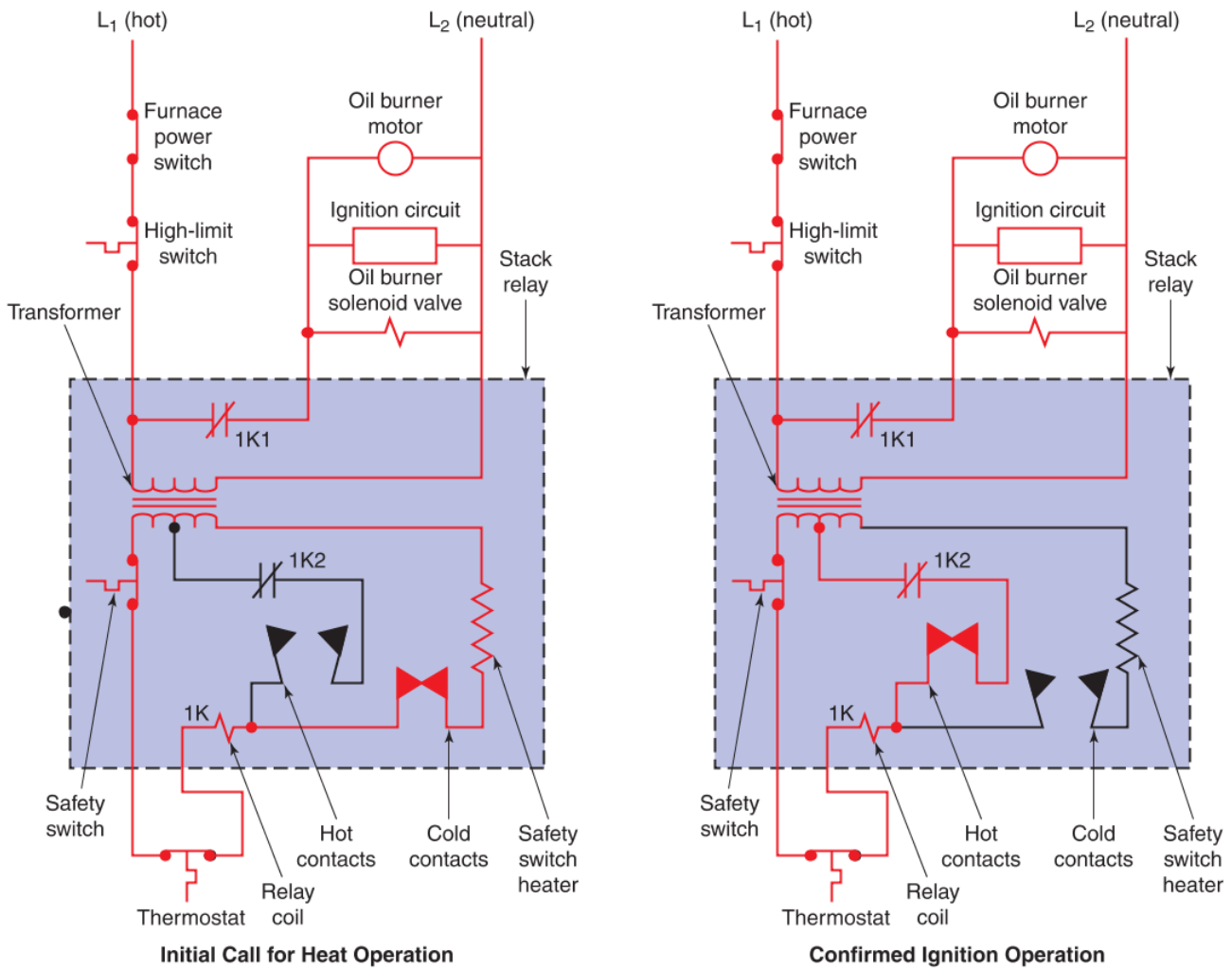

Goodheart-Willcox Publisher

Figure 42-31. The sequence of operation in a stack relay control circuit. Initial Call for Heat Operation—The 1K1 contacts close to power the oil burner motor, the ignition circuit, and the oil burner solenoid valve. The 1K2 contacts also close but do not conduct current, as the hot contacts remain open. Current flows through the relay coil, safety switch, safety switch heater, and cold contacts. Confirmed Ignition Operation—When enough heat is sensed by a stack relay's bimetal element, the cold contacts open, and the hot contacts close. The safety switch heater no longer conducts current or produces heat, but the relay coil remains energized through the hot contacts.

Both sets of relay coil contacts remain closed. The first set of contacts (1K1) continues to allow current flow to power the oil burner and other line power components. The second set of contacts (1K2) allows current to flow through the relay coil (1K), which keeps the furnace on until the thermostat is satisfied or a malfunction is sensed.

With the cold contacts open, the safety switch heater is out of the circuit and no longer producing heat in the stack relay. If the oil pumped into the furnace had not ignited and provided enough heat to cause the bimetal element to close its hot contacts and open its cold contacts, the safety switch heater would have remained in the circuit. After a specified period of time, the safety switch heater would have opened the safety switch, which would have de-energized the relay coil, shutting off the oil burner.

As long as an oil furnace produces heat, the bimetal element keeps its hot contacts closed to power the relay coil and run the oil burner. Once the desired temperature has been reached, the thermostat opens a switch that de-energizes the relay coil, which turns off the oil burner. The furnace also cycles off if the oil burner flame is extinguished or some other malfunction is sensed.

Copyright Goodheart-Willcox Co., Inc.

Stack relay circuits may have additional contacts and coils for additional control and different types of ignition. **Figure 42-31** shows just one way that a stack relay may be wired. Stack relays were very popular years ago and may still be found in older oil furnaces. An oil furnace with a stack relay as its primary sensing device may be due for replacement with a high-efficiency system.

42.6.2 Cad Cell Relays

A ***cad cell*** is a light-sensitive semiconductor used to visually detect the flame of an oil burner. A cad cell is a semiconductor device that has a coating of cadmium sulfide, which is a material with light-sensitive electrical properties. When cadmium sulfide is in darkness, it has a high resistance to electrical current. When it is exposed to light, it has a much lower resistance. A cad cell has two wires that connect to a primary control unit, which contains the relay and control circuitry, **Figure 42-32**.

A cad cell is wired to a circuit so that its changing resistance can be used to determine when an oil burner is producing a flame. Cad cells have no mechanical moving parts and are very dependable as flame detectors. They have a much quicker reaction time than a stack relay, which has moving mechanical parts.

When an oil burner ignites, light from the flame causes its cad cell's resistance to drop, allowing current to flow through the cad cell. When the cad cell has low resistance, current is diverted around a triac and safety switch heater in the control circuit. This allows oil furnace operation to continue as the safety switch heater is no longer energized, **Figure 42-33**.

If there is no flame, no light will be produced, so the resistance of the cad cell remains high. This allows the triac and safety switch heater to conduct current, causing the safety switch to open to shut down the furnace, **Figure 42-33**. The reset button must be pressed on the primary control unit before the furnace can be returned to operation.

Cad cells are primarily installed in the air tube of an oil burner. Always follow burner manufacturer recommendations regarding cad cell location, as a cad cell must be very carefully mounted. The cad cell must be lined up to see the oil burner flame, **Figure 42-34**.

Cad Cell

Primary Control Unit

White-Rodgers Division, Emerson Climate Technologies; Honeywell, Inc.

Figure 42-32. A cad cell and primary control unit make up a cad cell relay, which is used to monitor the presence of a flame in an oil furnace.

42.6.3 Ignition Control

A primary control unit governs an oil furnace's ignition. The majority of oil furnaces have gun burners that are lit by electrical ignition. Electrical ignition is accomplished by applying a high voltage to a circuit with a small gap between the ends of two electrodes. A spark is generated in the gap, near the outlet of the oil burner's air tube and nozzle. The electrode ends are positioned in front of and above the nozzle. The atomized fuel oil swirls out of the nozzle and mixes with the turbulent air from the oil burner. At the same time, a spark jumps between the electrode ends and ignites the mixture of air and fuel oil.

Copyright Goodheart-Willcox Co., Inc.

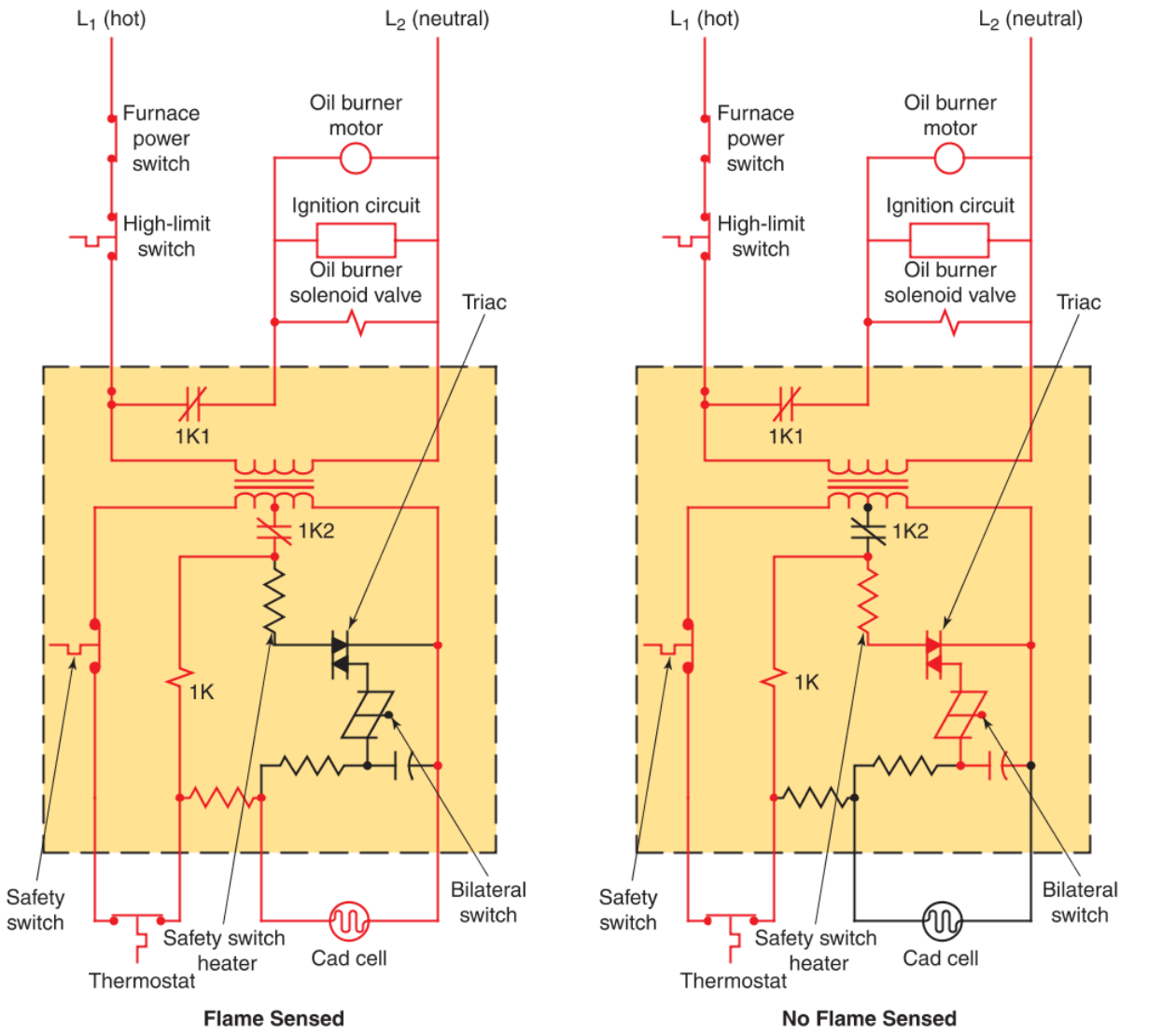

Goodheart-Willcox Publisher

Figure 42-33. The sequence of operation in a cad cell control circuit. Flame Sensed—With a flame present, the cad cell's resistance is low. Current flows through the cad cell and around the triac and safety switch heater for normal operation. No Flame Sensed—When no flame is present, the cad cell's resistance is high. This forces current through the triac and safety switch heater, which will eventually cause the safety switch to trip open.

11

The high-voltage spark may occur only as the furnace begins operation or may continue firing throughout the operation of the furnace. ***Interrupted ignition*** applies a high voltage to the electrodes for only a brief period at the beginning of oil burner operation. It relies on the flame to continue burning after electric current has stopped creating sparks between the electrodes. ***Intermittent ignition*** applies a high voltage to the electrodes throughout oil burner operation. As the furnace continues to operate to produce heat for the conditioned space, intermittent ignition continues to apply a high voltage for igniting the oil burner's flame. When an ignition source is always present, as in a standing pilot, it is referred to as continuous ignition or constant ignition.

Pro Tip

Ignition Terminology

Be aware that in the field, interrupted ignition is sometimes erroneously referred to as intermittent ignition, and intermittent ignition is sometimes erroneously referred to as continuous ignition. Be certain that the proper type of ignition is known.

Copyright Goodheart-Willcox Co., Inc.

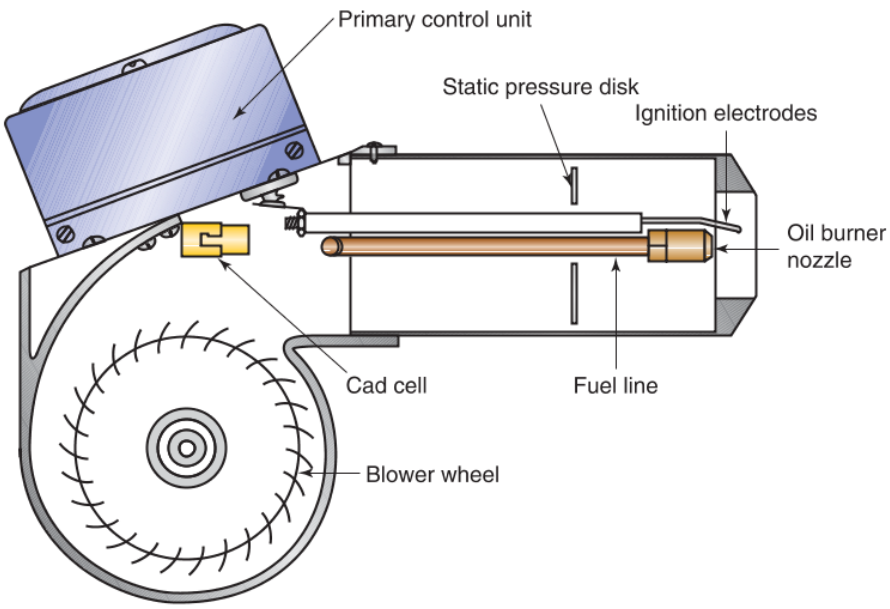

White-Rodgers Division, Emerson Climate Technologies

Figure 42-34. A cad cell must be mounted with a direct line of sight to the oil burner flame.

Generally, there are two different devices that can be used to generate the high voltage necessary to create the electric arc in an oil-fired appliance. These devices are an ignition transformer and a solid-state igniter.

Ignition Transformers

In an oil furnace, an ***ignition transformer*** is a transformer that steps up a line voltage of 120 Vac to a higher voltage. The high voltage arcs across a gap between two electrodes where it ignites the fuel oil exiting the air tube of the oil burner. An ignition transformer is an example of a step-up transformer. See **Figure 42-35**.

An oil furnace's primary control unit regulates the operation of an ignition transformer. Line voltage connects to an ignition transformer's primary winding terminals. The voltage produced across the secondary winding steps up from a line voltage of 120 Vac to a value ranging from 10,000 Vac to 14,000 Vac.

When an ignition transformer with a secondary winding rated at 10,000 Vac or 12,000 Vac needs to be replaced, an ignition transformer with a secondary winding rated at 14,000 Vac should be installed. This is especially advisable in situations involving cold combustion air or cold fuel oil or when voltage drops are known or suspected.

Solid-State Igniters

Newer oil furnaces typically have oil burners that use solid-state igniters for their ignition. A ***solid-state igniter*** is a device that uses electronic circuitry to produce the low-current, high-voltage electricity necessary for creating a spark across the electrodes of an oil burner, **Figure 42-36**.

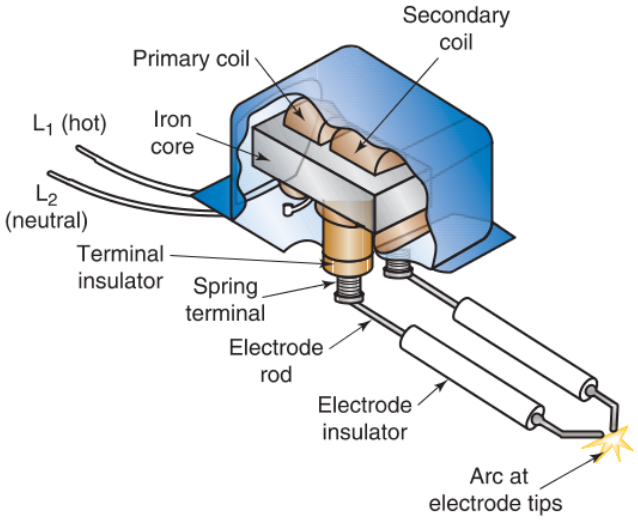

NORA

Figure 42-35. Cutaway of an ignition transformer showing the transformer's components.

Solid-state igniters produce a high-voltage output that ranges from 14,000 Vac to 20,000 Vac. These igniters produce higher voltages while using less power than ignition transformers. The increased voltage increases the spark temperature, so the spark can vaporize and ignite more of the fuel oil.

Copyright Goodheart-Willcox Co., Inc.

Carlin Combustion Technology, Inc.

Figure 42-36. A solid-state igniter used to ignite an oil burner.

42.6.4 Primary Control Unit Functions

An oil furnace's primary control unit monitors variables and initiates individual devices for ignition. A primary control unit relies on different functions to control furnace operation according to certain lengths of time or certain measurable variables. HVACR technicians need to understand the following functions of a primary control unit in order to properly troubleshoot and repair malfunctions:

- ***Standby.*** The time when an oil furnace is not burning fuel oil for heat is called standby. This is because the oil furnace's primary control unit is standing by for a call for heat from a system thermostat.
- ***Preignition.*** When a call for heat is acknowledged, preignition occurs. During preignition, the primary control unit energizes the igniter to establish an electric arc before the oil burner motor provides the mixture of fuel oil and air for combustion.
- Pre-purge. Also called valve-on delay, pre-purging occurs before ignition. The oil burner motor turns the burner fan, but the fuel supply line solenoid valve on the fuel unit remains closed. Because the solenoid valve blocks the fuel line, the burner fan can purge the combustion chamber and heat exchanger of any lingering fumes from previous cycles and bring in fresh air for combustion. Since the fuel supply line solenoid is closed, the burner motor can operate the fan without operating the pump. This allows the motor to operate the fan without filling the combustion chamber with unburned fuel oil.
- ***Ignition carryover.*** Ignition carryover is the length of time (in seconds) that an igniter will continue to spark after a flame has been sensed. A system's igniter continues to spark in order to ensure a flame is well established. This control unit function is only for interrupted ignition, as intermittent ignition continues sparking throughout a furnace's heating cycle.
- Post-purge. Also called *burner off delay*, this is the time during which the oil burner motor continues to power the oil burner fan after the fuel unit's solenoid valve closes. With no fuel oil being pumped into the combustion chamber, post-purging allows the burner fan to clear any remaining fumes from the combustion chamber and heat exchanger.
- Trial for ignition (TFI). Like gas furnace ignition control modules, oil furnace control units have a trial for ignition, which is the limited amount of time to ignite a burner flame. A trial for ignition is only a number of seconds. It may also be called *lockout time* or *safety lockout time*.
- ***Flame failure response time (FFRT).*** Related to an oil furnace's trial for ignition is its flame failure response time (FFRT), which is the amount of time for a primary control unit to sense that there is no flame when a thermostat is calling for heat. If the flame failure response time takes too long, unburned fuel oil can start soaking or filling the combustion chamber. If the flame failure response time is too brief, the primary control unit can lock out a system unnecessarily.
- ***Recycle time.*** For a given call for heat, an oil furnace primary control unit may attempt to ignite several times before locking out. Recycle time is the amount of time in seconds before an igniter attempts ignition again after a failed ignition attempt. Often, the primary control unit only allows an igniter to attempt ignition a set number of times.
- ***Recycle limit.*** The recycle limit, or *limited recycle*, is the number of times a furnace will try to ignite for a single call for heat before locking out. The primary control unit limits the number of times a furnace attempts ignition. If the furnace fails to ignite after this number has been reached, the primary control unit locks out the system.
- ***Reset limit.*** The reset limit is the number of times a primary control unit can be reset from a lockout. After the reset limit has been reached, a simple push of a button will not reset the furnace. Resetting the furnace requires a longer procedure

Copyright Goodheart-Willcox Co., Inc.

that HVACR technicians should perform rather than untrained building owners. This function allows a technician an opportunity to diagnose the root problem of the lockout. Reset limit may also be called *limited reset*, *restricted lockout*, or *lockout*.

42.7 Oil Furnace Exhaust

The products of combustion from an oil furnace must be properly vented to avoid contaminating the air in a conditioned living space. However, before the flue gases are vented, the heat in the flue gases must be captured by the heat exchanger and transferred to the conditioned air (or water in an oil-fired boiler). Heat transfer and venting of the products of fuel oil combustion begin in a system's combustion chamber.

42.7.1 Combustion Chambers

Combustion chambers play an important role in ensuring efficient heating and fuel oil combustion. The combustion chamber is the area in which the mixture of air and fuel oil burns to produce a flame. It may also be referred to as a *firepot*. Combustion chambers come in a variety of shapes and heights. It is the technician's job to know about a furnace's combustion chamber and be able to find an oil burner nozzle to match with the combustion chamber. The nozzle determines the spray pattern and amount of fuel oil blown into the combustion chamber, so it is an extremely important part of the system. If a nozzle is not correctly matched to the combustion chamber, it can cause the vaporized carbon in the fuel oil to transform into smoke and soot prior to burning. A combustion chamber must heat up quickly, reflect heat back to the burning zone, and quickly cool after burner shutdown.

Five common materials used in combustion chamber construction are insulating firebrick, common or hard brick, metal, ceramic, and molded composites. The combustion chamber is also lined with a fire-resistant material called ***refractory material***. The most efficient chamber shape is round or oval. Square or rectangular chambers are inefficient due to the corners as they require additional air for complete combustion. The burner nozzle should be centered halfway between the top and the bottom of the chamber.

Code Alert

Combustion and Ventilation Air

Chapter 5 of NFPA 31 covers air for combustion and ventilation of oil-fired appliances.

42.7.2 Oil Furnace Venting

Since excess air must be used to ensure complete combustion, a considerable amount of nitrogen is in the flue gas. Some oxygen, carbon dioxide, water, and impurities in the flue gas also go up the flue pipe (stack). About 2000 ft^3 of air (providing 400 ft^3 of oxygen) is used per gallon of fuel oil. This 2000 ft^3 of air includes the minimum amount of air necessary for combustion and the excess air necessary for complete combustion. Flue gas may be moved up the stack in the following ways:

- Natural convection—common in residential and small commercial units.
- Forced draft—by forcing the flue gases up the stack with a fan or blower.
- Induced draft—by drawing the flue gases up the stack.

Oil furnaces must maintain a consistent draft for efficient operation. Inconsistent draft or insufficient draft can cause problems. Draft is affected by a number of conditions, such as outdoor temperature, flue height, and flue temperature. Most vent systems produce excess levels of draft during certain times of the year. However, even slight variations in draft can directly influence combustion air intake.

A draft regulator is a device installed in a flue that is used to control draft. A bypass, or air-bleed, draft regulator is the most commonly used type of draft regulator. These are usually barometric dampers installed in the flue stack. When draft becomes excessive, a counter-weighted swinging door opens, allowing ambient air to enter the flue. This air mixes with the flue gases and cools them. This reduces the temperature difference between the flue gases and the outside air, which reduces draft. As the draft decreases, the damper door closes as needed. Always follow manufacturer instructions regarding draft, **Figure 42-37**.

Code Alert

Oil Furnace Flue Exhaust

The International Mechanical Code (IMC) states that oil-fired appliances must be vented according to NFPA 31, *Standard for the Installation of Oil-Burning Equipment*.

42.8 Oil-Fired Heating System Service

Oil-fired heating systems provide heat through the combustion of fuel oil. Areas of interest include fuel

Copyright Goodheart-Willcox Co., Inc.

Field Controls, LLC

Figure 42-37. A flue stack fitting with a barometric damper to act as a draft regulator. The door of a draft regulator opens and closes to keep the draft at the desired pressure.

oil storage tanks, fuel line piping, burners, operational controls, the combustion chamber and heat exchanger, and the flue.

42.8.1 Storage Tank and Fuel Line Installation

Installation of an oil-fired heating system includes a 200 gallon to 1,000 gallon storage tank. A fuel line connects the storage tank and the oil burner. Fuel lines are often copper, but they can be made of any material and build that is approved by agencies having authority.

Code Alert

Fuel Oil Line Materials

Section 1302 of the IMC specifies acceptable types of fuel oil piping and tubing material. These include brass pipe and tube, copper and copper-alloy pipe, copper and copper-alloy tube (Types K, L, or M), steel pipe and tube, and approved types of nonmetallic piping. All piping and tubing must be rated for its intended use and manufactured to specified standards.

Fuel lines should be sized according to manufacturer specifications. Review all system literature to determine fuel line size according to system capacity. The fuel lines must be able to convey enough fuel oil to match the maximum operating output of an oil-burning appliance.

Code Alert

Sizing for System Capacity

Section 1305.1 of the IMC states that a fuel oil system must be sized for the maximum capacity of fuel oil required for a fuel-burning appliance. The smallest size a supply line can be is 3/8″ (9.5 mm) inside diameter nominal pipe or 3/8″ (9.5 mm) outer diameter tubing. The smallest size a return line can be is 1/4″ (6.4 mm) inside diameter nominal pipe or 5/16″ (7.9 mm) outside diameter tubing. Copper tubing must have 0.035″ (0.9 mm) nominal and 0.032″ (0.8 mm) minimum wall thickness.

Several in-line components are installed between a fuel storage tank and the burner. These in-line components belong in the supply line, not the return line. A manual shutoff valve and a fuel filter are two of the components that should be installed in the supply line.

Code Alert

In-Line Valves

Sections 1307.1 and 1307.2 of the IMC require that a shutoff valve be installed between a fuel storage tank and a burner. While a shutoff valve is required to be in the supply line, Section 1305.4 of the IMC prohibits valves from being installed in the return line of an oil-fired appliance. A supply line must have a shutoff valve, and a return line cannot have any valves.

In one-pipe fuel delivery systems, the storage tank feeds fuel oil to the oil burner by gravity. Typically, the storage tank is located in the same room as the furnace. The storage tank should be at least 7′ (2 m) away from the furnace and should be elevated less than 25′ (7.5 m) above the oil burner. See **Figure 42-38**. This elevation keeps the fuel line pressure below 10 psi (70 kPa). Otherwise, a pressure-reducing valve must be used.

In two-pipe fuel delivery systems, the storage tank is typically placed outside the building, either aboveground or belowground. Regardless of whether the storage tank is aboveground or belowground, it can be placed either above the oil burner or below the oil burner. These installations should have the tank located within a reasonable distance of the oil burner to minimize the pressure drop in the fuel line between the tank and the oil burner inlet.

For fuel lines, runs of 50′ to 100′ (15 m to 30 m) should use 3/8″ (10 mm) copper tubing. Runs of 200′

Copyright Goodheart-Willcox Co., Inc.

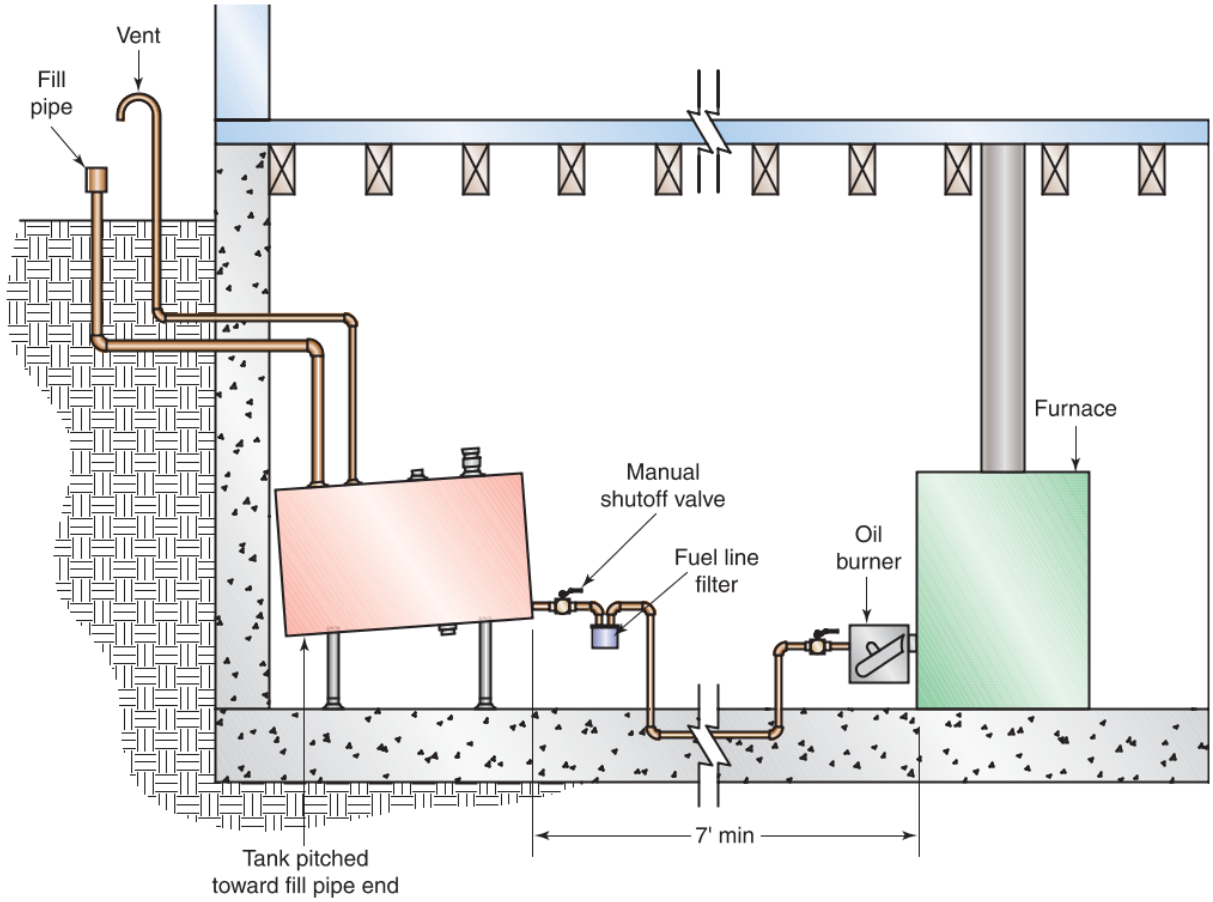

Goodheart-Willcox Publisher

Figure 42-38. An indoor installation with a one-pipe fuel delivery system. Note the required components in the fuel line and the minimum distance between the furnace and tank.

to 300′ (60 m to 90 m) should use 1/2″ (13 mm) copper tubing. The manufacturer's specifications should be checked if the fuel oil must be raised above the tank.

For storage tank installations both aboveground and belowground, the tank should be installed with a slight pitch toward the fill pipe end and away from the fuel line connection. This provides a low spot in the tank for dirt and water to collect.

There are several requirements for a fuel oil storage tank's vent pipe. Its purpose is to keep the inside of the tank at atmospheric pressure but still prevent intrusion of foreign materials. In order to vent properly, the opening needs to meet certain size requirements.

Code Alert

Oil Tank Vent Size

NFPA 31 provides requirements for fuel oil tank openings for filling and venting. Vent openings must meet a minimum size requirement to prevent abnormal pressures from building up in the tank, **Figure 42-39**.

In order for an oil tank vent to prevent intrusion of foreign materials, certain designs are required. The end of the vent pipe must be designed with a 180° bend to keep out dirt and rain. It must have an opening away from gutter downspouts, roof edges, and other

Minimum Tank Vent Openings	
Capacity of Tank (gallons)	Diameter of Vent (nominal size, inches)
660 or less	1 1/4
661 to 3,000	1 1/2
3,001 to 10,000	2
10,001 to 20,000	2 1/2
20,001 to 35,000	3

Goodheart-Willcox Publisher

Figure 42-39. This table shows the minimum diameter vent opening that can be used on fuel oil tanks by capacity.

Copyright Goodheart-Willcox Co., Inc.

blockages. The vent opening should be above the highest possible snowfall.

Code Alert

Oil Tank Vent Termination

Section 1305.7 of the IMC explains oil tank vent requirements. The vent must terminate with a weather-proof vent cap. It should have a free open area equal to the cross-sectional area of the vent pipe. It can have a screen, but that screen cannot be finer than No. 4 mesh.

Oil tank fill piping also has certain requirements. The cap on the oil fill pipe should always be in place, except when filling the tank. It should be designed to discourage tampering. The cap helps keep the fuel oil clean and reduces the chances of fire or explosion. See **Figure 42-40**.

With underground tanks, measures should be taken to ensure that no groundwater can seep into the tank. Underground tanks require a suitable gasket around any plugs to prevent water seepage. The plug and gasket must be tight and kept in good condition. Before each fill-up, or at least annually, check the tank with water-sensing paste. The paste changes color when water is present. Any water accumulation should be pumped out. A leaking tank must be replaced in accordance with local and other codes.

Code Alert

Oil Tank Installation

NFPA 31 includes installation requirements for tanks used to store and supply liquid fuel for liquid fuel-burning appliances.

Underground tanks require all threaded joints to be sealed with a temperature-resilient compound. Never use Teflon® tape. Loose or poorly sealed joints allow groundwater to infiltrate the storage tank.

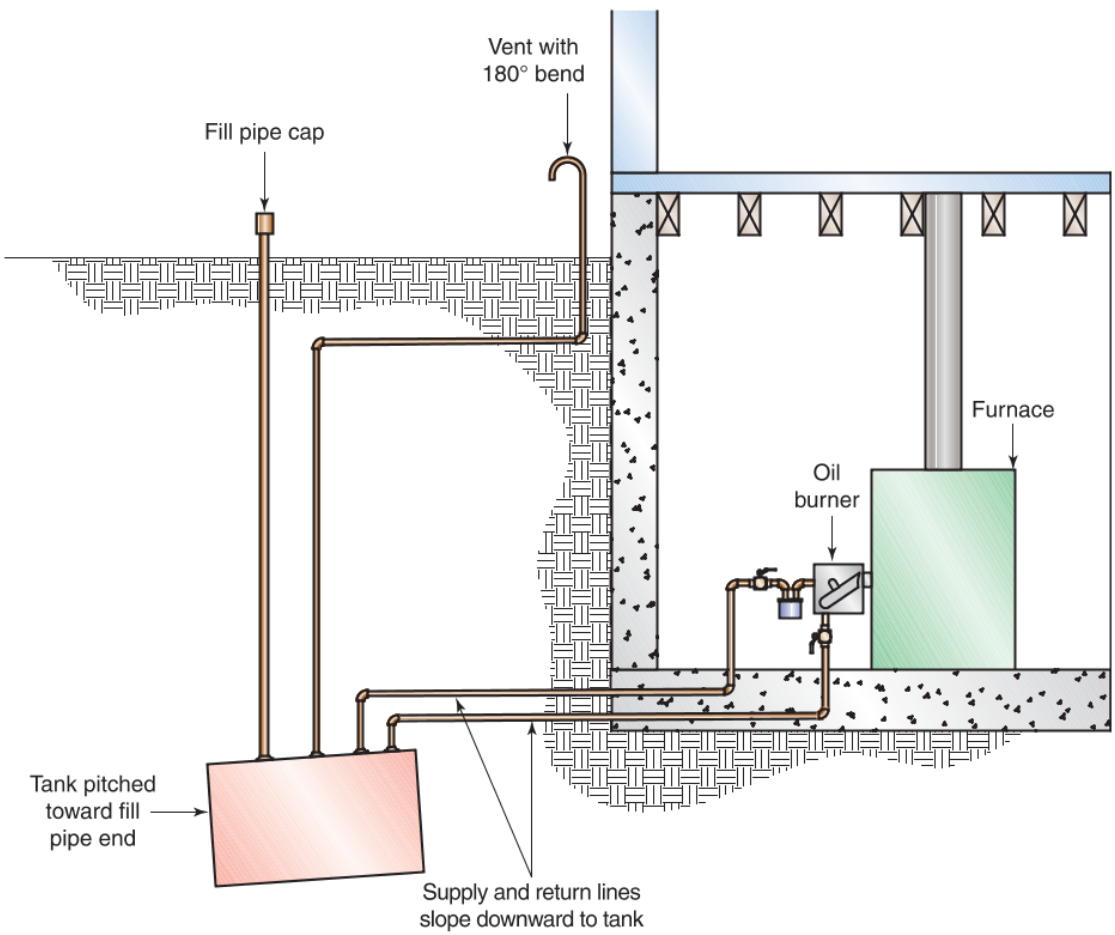

Goodheart-Willcox Publisher

Figure 42-40. An underground installation with a two-pipe fuel delivery system. Note the fill pipe, the vent, and the pitch of the storage tank and fuel lines.

Copyright Goodheart-Willcox Co., Inc.

Code Alert

Oil Piping Connections

Section 1303 of the IMC covers acceptable types of joints and connections used for the different piping and tubing materials that may be used in fuel oil line systems.

During installation, keep the tubing ends sealed with tape to keep dirt and moisture out. Remove the tape when connecting the tubing. The 3/8″ or 1/2″ (10 mm or 13 mm) copper tubing is often attached using fittings with standard 45° flares.

Tanks located aboveground may also generate water problems through condensation. To alleviate this problem, paint the tank silver to reflect the sun's rays and reduce thermal expansion. Locate the tank in a shaded area, if possible, and install the tank so the fill pipe end is pitched below the end with the fuel line connections. During warm weather, keep the tank filled to reduce air space at the top and minimize condensation.

The fuel lines in storage tanks should be mounted so the tubing opening is 3″ to 4″ (75 mm to 100 mm) above the bottom of the tank. The return line, if the system has one, does not need to go near the bottom of the tank for lighter oils (No. 1 or No. 2 fuel oil). For heavier fuel oils, however, the return line should go within 4″ to 5″ (100 mm to 130 mm) of the bottom of the tank to help keep the oil more fluid.

Code Alert

Fuel Line Support

The IMC includes minimum requirements for pipe support. See **Figure 42-41**.

42.8.2 Oil Burner Installation

Oil burner installation must be made in accordance with local codes and manufacturer instructions. The burner must be the correct height above the bottom of the combustion chamber. Burners are mounted either on adjustable legs or on a flange that is bolted to the furnace.

Code Alert

Oil Burner Installation

Chapter 10 of NFPA 31 provides guidelines related to the installation of oil burners and oil-burning appliances.

Before an oil burner is started, the fuel line must be completely purged of air. Air in the fuel line will form bubbles, which could result in fuel unit malfunctions, blowbacks, and flame failures. In an oil furnace, ***blowback*** is the ignition of a large amount of vaporized fuel oil that blows soot backward out of the combustion chamber.

Oil furnaces with two-pipe fuel delivery systems are designed to bleed their own fuel lines. Air is automatically eliminated through the return line. However, air can still be trapped in high spots in the fuel lines. Furnaces with one-pipe fuel delivery systems require the system to be bled manually. A leak in the fuel line almost always causes air-related troubles.

Piping Support and Spacing

Piping Material	Maximum Horizontal Spacing (feet)	Maximum Vertical Spacing (feet)
Brass pipe	10	10
Brass tubing (1 1/4″ and smaller)	6	10
Brass tubing (1 1/2″ and larger)	10	10
Copper or copper-alloy pipe	12	10
Copper or copper-alloy tubing (1 1/4″ and smaller)	6	10
Copper or copper-alloy tubing (1 1/2″ and larger)	10	10
Steel tubing	8	10
Steel pipe	12	15

Goodheart-Willcox Publisher

Figure 42-41. Maximum horizontal and vertical support spacing for various types of tubing of piping used for fuel oil lines.

Copyright Goodheart-Willcox Co., Inc.

Manually Bleeding an Oil Furnace

To manually bleed an oil furnace with a one-pipe fuel delivery system, locate the bypass plug (bleed screw) mounted in the fuel unit housing. Usually, this plug seals the bleed port, which is sometimes the same as the pressure gauge port.

1. Using pliers or a crescent wrench, loosen the bypass plug halfway.
2. Attach a 1/4" pliable tube to the bleed port. Direct the tubing into a large container that is placed below.
3. Using a wrench, loosen the bypass plug the rest of the way to open the bleed port completely.
4. Turn the furnace on. A flow of air and fuel oil should exit the fuel unit.
5. Once a steady stream of oil is present, turn off the furnace.
6. Oil should stop flowing. Remove the pliable tube from the bleed port and wipe it clean.
7. Reinstall the bypass plug and tighten it with a wrench.
8. Restart the furnace.

42.8.3 Oil Furnace Maintenance

Oil furnaces must be properly maintained to ensure peak performance. An experienced technician should check, clean, and adjust a system each year. Oil furnaces require additional cleaning in comparison to gas furnaces. Soot can form in the heat exchanger and burner, blocking some of the passageways. Large amounts of soot buildup can stop a furnace from functioning and cause combustion gases to be forced back into the conditioned space. Soot contains sulfur, so an unpleasant odor may be present in such cases. Technicians should perform the following procedures during the yearly maintenance inspection:

- Inspect the manual shutoff valve and fuel line filter. Replace filter or filter cartridge.
- Check fuel line connections for tightness.
- Replace burner nozzle assembly according to manufacturer recommendations. For peak performance, the burner nozzle is typically replaced yearly.
- Check that the electrodes are clean and positioned correctly in relation to the burner nozzle.
- Clean or replace the fuel unit strainer.
- Insert a pressure gauge into the fuel unit's pressure gauge port. Start the burner and adjust the pressure setting to the manufacturer's specifications (usually about 100 psi or 700 kPa).

Oil burner nozzles require special care and attention. They are designed with precision to provide the proper amount of fuel oil for complete combustion. Improper handling can cause damage, which can lead to equipment failure. Below are some general guidelines for working with oil burner nozzles:

- Never interchange the inner parts of a nozzle with those from another nozzle.
- Never attempt to clean an oil burner nozzle. Brushes and cleaning products will damage the nozzle's machined surfaces.
- Keep a nozzle in its box until it is time to install the nozzle.
- Pick up nozzles by their hex flats. Never touch the strainer or orifice.
- If a nozzle is dirty or plugged, replace it.
- Be careful not to twist the air tube or move the air tube out of line.
- Always use a nozzle-changing tool for removing oil burner nozzles.
- Always replace a nozzle with an exact replacement. Use the same orifice, spray angle, and spray pattern as originally used.

Other tasks related to oil furnace maintenance involve the effect of one component on another. For instance, because flame retention oil burners produce hotter flames and use less combustion air than standard oil burners, check the combustion chamber materials and condition each time such a system is serviced. See **Figure 42-42**.

Safety Note

Combustion Chamber Explosions

If enough fuel oil and air collect in the combustion chamber and ignite, there may be a puff of flame or an explosion. The explosion can be forceful enough to wreck the building and injure or kill occupants. If fuel oil is found in a combustion chamber during inspection, shut off valves and vent the combustion chamber. Remove the fuel oil by means of a suction pump and rags until all danger of oil fumes is gone.

42.8.4 Troubleshooting Oil Furnaces

Operation of an oil furnace can be monitored using an integral monitoring device. The monitor is connected to the oil burner's primary control unit to measure various system parameters, such as cad cell resistance, cycle time, voltage to the burner,

Copyright Goodheart-Willcox Co., Inc.

Ullman Devices Corporation

Figure 42-42. Telescoping mirrors used to inspect a combustion chamber and heat exchanger.

temperature of the flue stack, and flame quality. See **Figure 42-43**.

Many monitoring devices provide diagnostic trouble codes that assist a technician in troubleshooting an oil furnace. The device may be left on the jobsite to monitor operating cycles to determine whether a furnace is operating within specifications. This provides a technician with a log of data collected over time that can be used to analyze how a furnace is operating. This is especially useful in systems that are experiencing intermittent problems. Other instruments are designed for testing individual oil burner components, **Figure 42-44**.

Proper flame appearance in an oil furnace is luminous (mainly yellow), **Figure 42-45**. If there is insufficient combustion air, the flame turns dull orange or red, and there may also be smoky tips to the flame. Soot deposits in a combustion chamber typically collect when the furnace first starts. The more often the furnace starts, the greater the soot deposits are. A correctly sized oil burner that operates less frequently will deposit less soot in the furnace and stack.

Sometimes, a blowback will blow soot into a building's conditioned space. This often requires major cleaning. Delayed ignition and blowback may be due to any of the following:

- Electrodes improperly spaced.
- Nozzle spray pattern distorted away from electrodes.
- Weak ignition transformer.
- Poor insulation on the electrodes.

In no case should the electrode ends be touching the oil spray. If they do, the electrodes will become

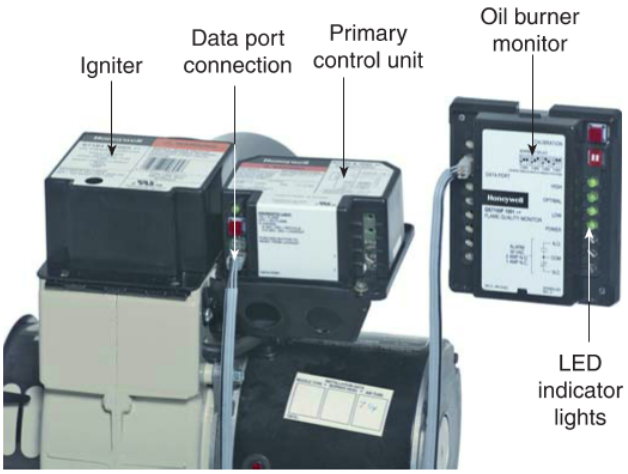

Remotely Mounted Monitor

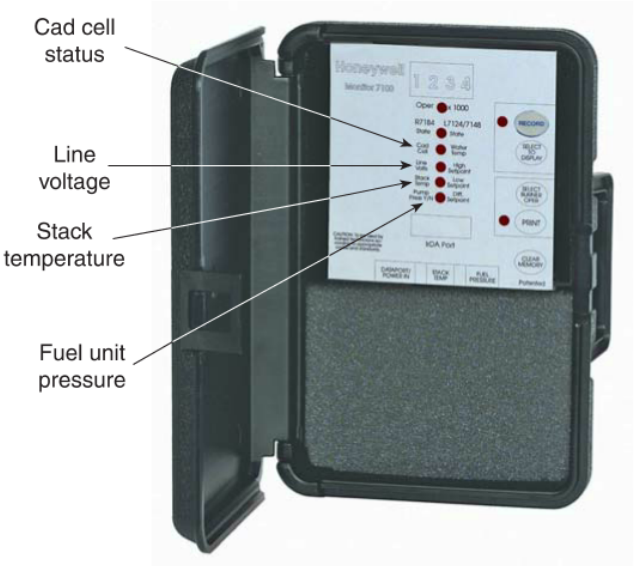

Portable Oil Burner Monitor

Honeywell, Inc.

Figure 42-43. Oil burner monitors are connected to the primary control unit through the data port. Some monitors can be mounted remotely while others are portable.

Copyright Goodheart-Willcox Co., Inc.

Westwood Products, Inc.

Figure 42-44. An instrument that tests a cad cell and its relay.

carbon coated. Observe ignition and nozzle spray action to check for normal operation. Poor fuel oil delivery may be the result of clogging. The main fuel line filter, the fuel unit filter, or the nozzle filter may be partially clogged. Check all three filtering devices when servicing the system. **Figure 42-46** outlines common oil burner problems.

Flame failure may be caused by one or more of the following:

- Storage tank out of fuel oil.
- Storage tank not vented.
- Clogged filter in fuel line.
- Ice in fuel line.
- Loose fuel line connection (air in line).
- Dirt in fuel line.
- Water in fuel line.
- Loose wiring or connections.
- Motor not running (check reset button).
- Defective fuel unit.
- Fuel unit pump losing prime.
- Changing pressure or low pressure at fuel unit pump (slipping coupling).
- Clogged burner nozzle.
- Damaged burner nozzle.
- Improperly installed bypass plug.

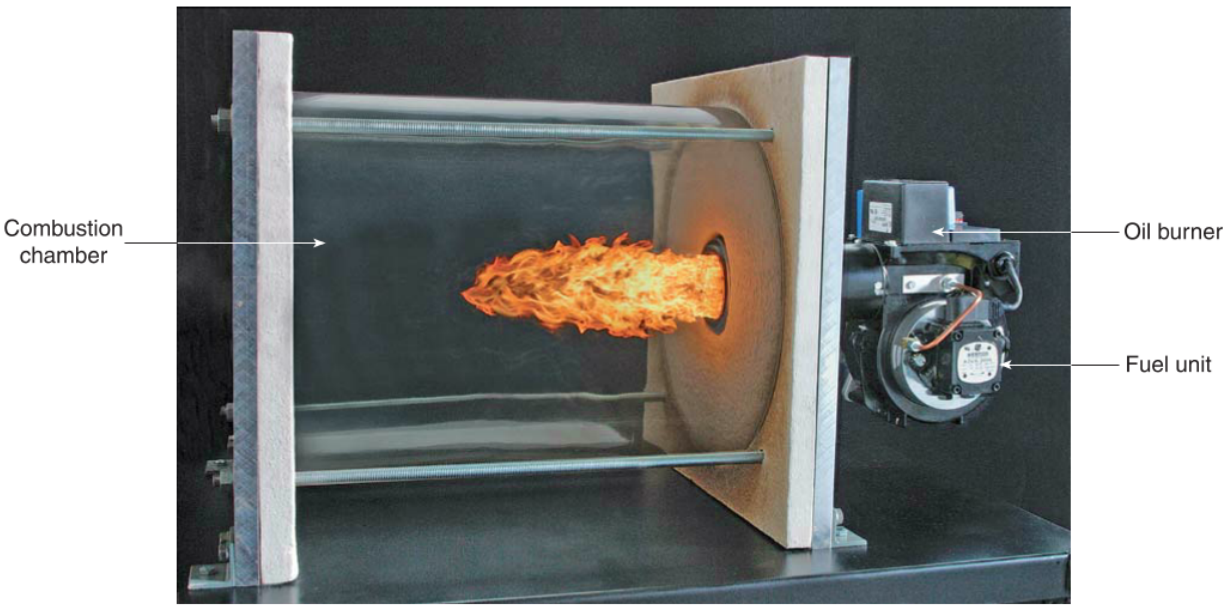

Carlin Combustion Technology, Inc.

Figure 42-45. A properly adjusted flame produced by a gun burner.

Copyright Goodheart-Willcox Co., Inc.

Oil Burner Problems and Causes	
Problem	**Possible Cause**
Burner does not start.	1. Relay does not close (will not close or contacts dirty). 2. Safety lockout stays open. 3. Bad relay coil. 4. Low voltage. 5. Open high-limit control. 6. Broken wires or loose connections. 7. Relay transformer open. 8. Thermostat open (dirt on contacts, loose or dirty connections). 9. Stack switch open. 10. Heat-sensing contacts out of place or open. 11. Motor overload open (burned out or has dirty contacts).
Burner starts, but locks out.	1. No fuel oil out of nozzle. • Clogged. • Pressure too low. • Fuel unit not working. • Loose motor coupling. • Air leaks in fuel line. • Fuel line shutoff valve closed. • Strainers or screens clogged (filter, fuel unit screen, or nozzle strainer). • The pressure regulator in the fuel unit is stuck open. • Vent on storage tank closed. • Empty storage tank. 2. Fuel oil coming out of nozzle, but no ignition. • Electrodes not positioned correctly. • Insulators cracked. • Ignition wires are worn, are loose, or have dirty connections. • Transformer/igniter not operating. • Primary wires are worn, are loose, or have dirty connections. • Low line voltage. 3. Fuel oil to nozzle, ignition OK, but no flame. • Clogged nozzle. • Clogged nozzle strainer. Nozzle loose. • Pressure too low. • Fuel oil too heavy (wrong oil or too cold). • Excessive air or too much draft. • Electrodes in wrong position. 4. Flame burns only a few seconds. • Flame sensor not in correct position. • Stack switch not operating correctly. • Excessive air or air too cold. • Flame is too lean.
Burner cycles, but not on lockout.	1. Thermostat differential too close. 2. Anticipator set too close. 3. Limit switch set too low. 4. Overfiring (reaching high-limit temperature too quickly).

Goodheart-Willcox Publisher

Figure 42-46. Common oil burner problems, symptoms, and possible causes. *(continued)*

Copyright Goodheart-Willcox Co., Inc.

Burner emits smoke, soot, odors, or pulsating sound.	1. Wrong oil pressure. 2. Flame touches combustion chamber. 3. Not enough draft. • Dirty chimney. • Draft regulator is out of adjustment or is stuck open. • Dirty flue. • The combustion chamber or the heat exchanger leaks. 4. Poor mixing of air and fuel oil. • Nozzle is worn, loose, dirty, or leaking. • Oil pressure too low or too high. • Poor air velocity and turbulence. • Not enough air (shutter closed too much, fan binding, or tight bearings).
Burner puffs back.	1. Water in fuel oil. 2. Delayed ignition. • Electrodes not positioned correctly or loose. • Insulators carbonized. • Nozzle is worn, loose, dirty, or leaking. • Voltage drop when burner starts. • Oil pressure too low or too high. • Transformer leads loose or dirty. • Transformer not operating correctly. • Excessive air or high draft.
Burner is making noise.	1. Loose fan. 2. Loose shutter. 3. Worn fuel unit pump. 4. Dirty strainer. 5. Air in fuel line. 6. Transformer hum. 7. Draft regulator vibrates. 8. Motor coupling worn. 9. Motor and pump not lined up correctly. 10. Relay contacts not seating tightly. 11. Fuel line restricted. 12. Motor mounting loose. 13. Tight motor bearings. 14. Tank hum.
Burner's fuel oil consumption is too high.	1. Nozzle is worn, loose. 2. Combustion chamber is dirty. 3. Too much combustion air (heat escapes up flue due to high flow of flue gases). 4. Poor mixing of air and fuel oil. 5. Not enough draft over fire. 6. Air leaks into combustion chamber. 7. Oil pressure too high or too low. 8. Overfiring, as noted by a high stack temperature.

Goodheart-Willcox Publisher

Figure 42-46. Continued.

Copyright Goodheart-Willcox Co., Inc.

Having no spark across the electrodes may be caused by the following:

- Loose wiring.
- Bad ignition transformer.
- Low voltage to electrode.
- Crack in electrode insulator.
- Electrodes carbonized.
- Electrode spacing too far or too close.

Fuel oil on the floor of a furnace room is dangerous. A leak may be caused by loose fittings or unions, a damaged fuel unit pump seal, or air in the fuel line. If a leak is suspected of being caused by air, check for air in the system by connecting a pressure gauge at the fuel unit's pressure gauge port, **Figure 42-47**.

If the gauge needle fluctuates, it signifies that there is air in the system. For small leaks, put a tube from the bleed port in a bottle of oil. Bubbles will indicate an air leak in the fuel line. Once the source of the leak is determined, repair or replace the damaged part.

Safety Note

Blowing Out Fuel Lines

If a fuel line is dirty or clogged, blow it out with nitrogen gas. Never use compressed air or oxygen because a violent explosion may result. Also, always use a pressure regulator and a pressure-relief valve when blowing out fuel lines.

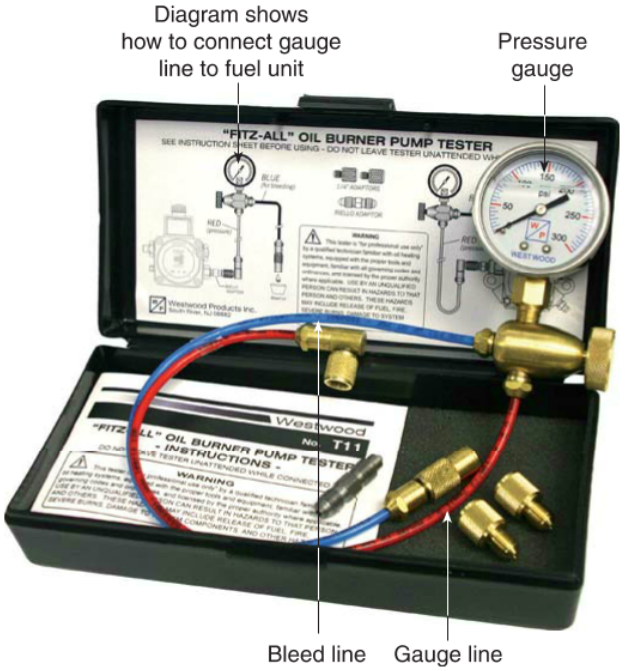

Westwood Products, Inc.

Figure 42-47. A pressure gauge designed to be connected to a fuel unit's pressure gauge port.

Fuel Oil Additives

In noncondensing oil furnaces, flue gases must be warm. Otherwise, condensation will form in the flue, which can cause severe corrosion. One corrosive agent that may form is sulfuric acid (H_2SO_4). It corrodes steel rapidly; discolors brick and stone; and sticks to the heat exchanger, flue pipe, and inside of the chimney, producing a scaly yellow-red crust. This decreases furnace efficiency, restricts airflow, and increases smoke production. Using a fuel oil with low sulfur content reduces sulfuric acid formation. Another way to combat the formation of sulfuric acid is to use fuel oil additives. Fuel oil additives reduce the sulfur content in the flue gas and the amount of visible smoke produced. Fuel oil additives also reduce deposits in the combustion chamber, heat exchanger, and flue.

If water is present in fuel oil, it can allow bacteria to grow and multiply. Sludge, which clogs filters and nozzles, may be caused by bacteria. A fuel oil additive can be added to the main storage tank to kill the bacteria. Moisture also retards combustion and may even cause a flame to go out. Moisture in fuel oil may pose a more difficult problem than a single dose of fuel oil additive can solve. Two filters may be necessary on problematic installations. A large bypass filter can be installed at the storage tank, and a no-bypass filter can be installed at the burner. A no-bypass filter does not allow fuel oil to pass through the filter when the filtering element inside is full.

Testing Ignition Devices

Ignition transformers and solid-state igniters occasionally wear down and break. Manufacturers have developed instruments for testing solid-state igniters that often can be calibrated to also test ignition transformers, **Figure 42-48**. However, instruments made to test the operation of ignition transformers generally should not be used to test solid-state igniters, **Figure 42-49**. This is because solid-state igniters have a high-frequency output of 20,000 Hz whereas ignition transformers have a frequency output of only 60 Hz. Always follow manufacturer instructions for testing procedures.

Caution

Testing Solid-State Igniters

Prior to testing a solid-state igniter, be certain the manufacturer approves such a test. Be careful not to short the terminals as this can destroy the internal circuitry of the igniter.

Copyright Goodheart-Willcox Co., Inc.

Igniter Testing Instrument

Solid-State Igniter

Allanson Inc.

Figure 42-48. Instrument used to diagnose solid-state igniters and ignition transformers.

Westwood Products, Inc.

Figure 42-49. An instrument used to test only ignition transformers. It cannot be used to test solid-state igniters.

Copyright Goodheart-Willcox Co., Inc.

Chapter Review

Summary

- Oil furnace operation begins when a system thermostat calls for heat. The furnace's primary control unit responds by opening a solenoid valve in the fuel line, energizing the oil burner's motor, and applying a high voltage across electrodes to ignite the fuel oil. Once the heat from fuel oil combustion has begun to build up in the heat exchanger, an indoor blower circulates heated air to the conditioned space.
- Fuel oil is a form of refined petroleum with various grades. Flash point and ignition point are indicators of a fuel oil's ability to vaporize and burn. A fuel oil's viscosity plays a part in determining what size burner nozzle should be used in an oil burner.
- To properly diagnose incomplete combustion and to determine combustion efficiency, a technician conducts a CO_2 test, stack temperature test, draft test, and smoke test. Both CO_2 tests and smoke tests are used to identify whether incomplete combustion is occurring. A draft test gauges the rate of flue gas flow through the stack. Stack temperature is an indicator of combustion efficiency.
- A one-pipe fuel delivery system relies partially on gravity to deliver fuel oil and is used when the fuel oil tank is above the oil burner. One-pipe fuel delivery systems tend to experience more air-related problems, but they require less tubing and installation labor.
- A two-pipe fuel delivery system has separate supply and return fuel lines. Two-pipe fuel delivery systems pump more fuel oil than is necessary, sending back some fuel oil to the tank through the return line. However, two-pipe lines require no bleeding when they are opened and exposed to air.
- An oil deaerator removes air from fuel oil to help prevent reduced oil pressure and oil burner lockouts. A fuel line filter removes impurities from fuel oil before it reaches the oil burner. If an oil burner is located too far from the fuel oil tank, a booster pump is used to pump fuel oil to a reservoir tank located closer to the burner.
- An oil burner is a device that controls the burning of fuel oil.
- Oil burner nozzles are designed to spray a specific amount of fuel oil into the combustion chamber at a specific angle and in a specific pattern at a standard pressure.
- An oil burner motor provides mechanical power to a fan and fuel unit in the oil burner assembly.
- The two types of oil furnace sensing devices are stack relays and cad cell relays. A stack relay uses a bimetal element mounted in the flue of a furnace to sense the heat produced by fuel oil combustion. A cad cell relay uses a light-sensitive semiconductor to determine when an oil burner is producing a flame.
- Interrupted ignition produces a spark for only a brief period at the beginning of oil burner operation. Intermittent ignition produces a spark across the electrode gap throughout oil burner operation.
- A primary control unit starts and stops an oil furnace while monitoring variables for safe operation. Functions such as pre-purge, post-purge, trial for ignition (TFI), flame failure response time (FFRT), and recycle limit help ensure safe ignition and operation of an oil furnace.
- An oil-fired heating system's storage tank may be installed aboveground, belowground, or inside a building's basement. A vent pipe must keep the inside of the tank at atmospheric pressure and must meet certain code requirements. The tank should have a slight pitch toward the fill pipe end to provide a spot for dirt and water to collect.
- Air in fuel lines can stop fuel oil from being pumped, cause flame failures, or result in blowbacks. To remove air from the fuel lines of a one-pipe system, bleed the lines through the bleed port or pressure gauge port on the fuel unit until a steady stream of fuel oil comes out.
- Routine oil-fired heating system maintenance includes fuel line and shutoff valve inspection, filter replacement, nozzle replacement, and oil pressure measurement and adjustment. When troubleshooting a problem, a technician should use monitoring devices and diagnostic trouble codes to pinpoint the cause.

Copyright Goodheart-Willcox Co., Inc.

Review Questions

Answer the following questions using the information in this chapter.

1. Which of the following is *not* an action that an oil furnace's primary control unit performs in response to a call for heat?
   A. Closing a damper in the flue to build pressure in the combustion chamber.
   B. Opening a solenoid valve in the fuel line.
   C. Signaling the igniter to send high-voltage electricity to the electrodes.
   D. Turning on the oil burner motor.
2. A fuel oil's viscosity primarily plays a part in determining _____.
   A. air band adjustment
   B. burner nozzle orifice size
   C. flue pipe size
   D. oil tank vent pipe size
3. The heating value of No. 2 fuel oil ranges from _____ per gallon.
   A. 240 Btu to 480 Btu
   B. 14,000 Btu to 20,000 Btu
   C. 12,000 Btu to 14,000 Btu
   D. 137,000 Btu to 141,800 Btu
4. The amount of noncombustible contaminants in fuel oil is referred to as the fuel oil's _____.
   A. ash content
   B. carbon residue
   C. distillation quality
   D. sediment
5. A flame that is _____ may be the result of incomplete fuel oil combustion.
   A. dull orange or red
   B. mainly yellow and luminous
   C. mostly blue with red or orange feathering
   D. white
6. When taking combustion efficiency measurements, _____ is the acceptable range of carbon dioxide in the flue gas.
   A. 0% to 5%
   B. 8% to 12%
   C. 25% to 28%
   D. 42% to 47%
7. Stack temperature is determined by subtracting the temperature of the _____ from the temperature of the flue gas in the flue pipe.
   A. combustion air
   B. combustion chamber
   C. flame
   D. oil storage tank
8. An oil-fired appliance may use a(n) _____ in its flue pipe to help control the amount of air drawn into the flue.
   A. air tube
   B. barometric damper
   C. booster pump
   D. combustion head
9. When determining an oil-fired appliance's combustion efficiency, the test that involves drawing a sample of flue gas from the flue or combustion chamber and passing it through filter paper is the _____.
   A. CO_2 test
   B. draft test
   C. oil filter test
   D. smoke test
10. A(n) _____ allows a one-pipe fuel delivery system to operate as a two-pipe fuel delivery system.
    A. booster pump
    B. combustion air tee
    C. fuel line filter
    D. oil deaerator
11. A booster pump should be located close to the _____.
    A. cad cell
    B. fuel oil tank
    C. oil burner
    D. reservoir tank
12. The purpose of a(n) _____ in a gun burner is to disturb airflow from the blower fan to create air turbulence for mixing air and fuel oil.
    A. air tube
    B. combustion head
    C. electrode
    D. static pressure disk
13. When servicing an oil burner, the main reason that a technician should clean soot off of the electrodes' insulation is because _____.
    A. dirty electrodes upset customers
    B. soot accumulates quickly and can completely block an air tube's airflow
    C. soot conducts electricity and could short out the high-voltage signal
    D. soot eats right through electrode insulation in a matter of days

Copyright Goodheart-Willcox Co., Inc.

14. The purpose of an oil burner nozzle is to _____.
    A. atomize the fuel oil
    B. regulate the amount of fuel oil delivered to the combustion chamber
    C. spray atomized fuel oil in a specific pattern
    D. All of the above.
15. A standard pressure setting on fuel units on oil burners and the pressure at which most oil nozzles are rated is _____.
    A. –0.02 in. WC
    B. 10 psi
    C. 30 psi
    D. 100 psi
16. The purpose of an adjustable air band is to _____.
    A. adjust the direction of rotation of air in the air tube
    B. provide air to cool the burner motor's windings
    C. reduce air turbulence in the air tube
    D. regulate the amount of air the burner fan can draw in
17. Fuel units perform all of the following tasks, *except* _____.
    A. act as a secondary filter after the fuel line filter
    B. actuate the draft regulator upon a call for heat
    C. move fuel oil from the tank to the burner
    D. regulate the pressure of oil pumped to the burner
18. Which of the following statements regarding stack relays is *not* true?
    A. The hot and cold contacts are operated by a bimetal element.
    B. The safety switch heater keeps the safety switch open whenever the cold contacts are closed.
    C. The stack relay's cold contacts open when heated sufficiently.
    D. Sufficient heat from flue gases closes a stack relay's hot contacts.
19. Which of the following statements regarding cad cell relays is true?
    A. A cad cell relay is typically installed in the flue.
    B. A cad cell relay reacts more quickly than a stack relay.
    C. A cad cell relay uses a bimetal element to determine flue temperature.
    D. The cadmium oxide coating of the cell allows it to change resistance in response to minor fluctuations in temperature.
20. An ignition system that provides a spark for only a brief period at the beginning of oil burner operation is called _____ ignition.
    A. continuous
    B. intermittent
    C. interrupted
    D. one-shot
21. The ignition device most commonly used in new oil furnaces is a(n) _____.
    A. glow coil
    B. ignition transformer
    C. pilot light
    D. solid-state igniter
22. The term *ignition carryover* refers to _____.
    A. the maximum amount of time allowed for an ignition attempt
    B. the period of time that an igniter is energized before the burner provides fuel oil for combustion
    C. the period of time that an igniter will continue to spark after a flame has been sensed
    D. the period of time that must elapse between a failed ignition attempt and another ignition attempt
23. Which of the following statements regarding combustion chambers in oil furnaces is *not* true?
    A. A burner nozzle should be positioned facing vertically upward from the bottom center of a combustion chamber.
    B. Combustion chambers are lined with a refractory material.
    C. A combustion chamber of a certain size and shape must have a burner nozzle with a spray pattern to match it.
    D. All of the above.

Copyright Goodheart-Willcox Co., Inc.

24. Oil furnace draft is affected by several conditions, including all of the following, *except* _____.
    A. flue height
    B. flue temperature
    C. oil tank temperature
    D. outdoor temperature
25. A shutoff valve must be placed in the _____ of an oil-fired appliance.
    A. flue piping
    B. fuel return line
    C. fuel supply line
    D. tank vent piping
26. Which of the following practices should *not* be employed on a fuel oil tank's vent?
    A. Include a screen on the vent that is no finer than No. 4 mesh.
    B. Maintain an open area equal to the cross-sectional area of the vent pipe.
    C. Secure a vacuum seal plug to prevent moist air from entering the tank.
    D. Terminate with a weatherproof vent cap.
27. Which of the following is *not* a guideline for handling oil burner nozzles?
    A. Always use a nozzle-changing tool to remove burner nozzles.
    B. If a nozzle is dirty, clean it.
    C. Never touch a nozzle's strainer or orifice.
    D. Pick up nozzles by their hex flats.
28. Blowback in an oil furnace may be caused by all of the following, *except* _____.
    A. improperly spaced electrodes
    B. an overfilled storage tank
    C. poor insulation on the electrodes
    D. a weak ignition transformer
29. If there is no spark at an oil furnace's electrodes, it may be caused by all of the following, *except* _____.
    A. carbonized electrodes
    B. improper electrode spacing
    C. an improperly installed bypass plug
    D. loose wiring
30. In oil-fired heating systems, fuel oil additives may be used to do all of the following, *except* _____.
    A. eliminate the need to replace fuel line filters
    B. kill sludge-forming bacteria
    C. minimize the formation of smoke and other corrosive agents
    D. reduce combustion chamber deposits

Copyright Goodheart-Willcox Co., Inc.

CHAPTER 43 Electric Heating Systems

Chapter Outline

43.1 Principles of Electric Resistance Heating
43.2 Electric Heating Elements
43.2.1 Open Wire
43.2.2 Open Ribbon
43.2.3 Tubular Cased Wire
43.3 Electric Heating Systems
43.3.1 Electric Furnaces
43.3.2 Duct Heaters
43.3.3 Fan Heaters
43.3.4 Electric Baseboard Heating Units
43.3.5 Electric Radiant Heat
43.3.6 Electric Heat for Deicing and Snow Melting
43.4 Electric Furnace and Duct Heater Controls
43.4.1 Airflow Switches
43.4.2 Sequencers
43.4.3 Electromagnetic Contactors
43.4.4 Mercury Contactors
43.4.5 Safety Controls
43.5 Electric Baseboard Heating Unit Controls
43.6 Electric Heat Construction Practices
43.6.1 Heat Loss
43.6.2 Humidity and Ventilation
43.7 Electric Heating System Service
43.7.1 Installing Heating Elements
43.7.2 Installing Baseboard Heating Units
43.7.3 Electric Heating System Maintenance and Troubleshooting

Learning Objectives

Information in this chapter will enable you to:

- Identify the advantages and disadvantages of electric heating systems compared to combustion heating systems.
- Calculate an electric heating system's heat production when given the system's wattage or voltage and amperage values.
- Describe the three types of electric heating elements.
- List examples and applications of convection electric heating systems.
- Compare and contrast direct and indirect radiant heating systems.
- Explain the purpose of sequencers and different contactors used in electric heating systems and how they function.
- Describe the operation of airflow and safety control devices in electric heating systems.
- Explain how controls are used in electric baseboard heating and some of their requirements.
- Summarize construction practices used for buildings with electric heating systems.
- Install, maintain, test, and troubleshoot electric heating systems.

Technical Terms

continuous load
direct radiant heat
duct heater
electric baseboard heating unit
electric furnace
electric heating element
electric radiant heat
electric resistance heating
fan heater
fusible link
indirect radiant heat
mercury contactor
open ribbon
open wire
sequencer
tubular cased wire

Review of Key Concepts

Reviewing these concepts from earlier chapters will help you understand new concepts presented in this chapter:

- Voltage is electrical pressure that causes current (electron flow) in a closed circuit. Voltage is measured in volts. Current is the flow of electrons and is measured in amperes. (Chapter 12)
- Resistance is the name of the electrical property that measures how much a material resists the flow of electrons through it. (Chapter 12)
- The harder it is for electrons to move through a material, the greater the heat generated in that material. For example, iron and steel have greater resistance than copper, so they produce more heat when current passes through them. (Chapter 12)
- The relationship of voltage, current, and resistance in an electrical circuit is explained mathematically in Ohm's law: current × resistance = voltage. (Chapter 12)
- The relationship of power, current, and voltage in an electrical circuit is explained mathematically in Watt's law: current × voltage = power. (Chapter 13)
- Series circuits provide current with a single path to follow, whereas parallel circuits allow current to flow along two or more electrical paths. (Chapter 12)
- A multistage thermostat can vary an electric furnace's heating capacity by controlling the number of electric heating elements that are energized in order to produce more or less heat. (Chapter 36)
- Heating systems that rely on natural convection to distribute heated air function on the principle that heated air is lighter than cool air, which means heated air rises and cool air drops. (Chapter 38)
- Control devices used to detect blower operation include sail switches, end switches, and pressure switches. (Chapter 41)
- Fuses, circuit breakers, thermistors, and other devices are used to protect circuits from current overloads and overheating. (Chapter 13)
- Exfiltration is air naturally leaving a building through doors, windows, and other construction joints. (Chapter 28)
- A heat recovery ventilator (HRV) is a heat exchanger that passes incoming fresh air and outgoing stale air through a series of parallel passages so that incoming air is closer to the temperature of outgoing air. An energy recovery ventilator (ERV) operates in the same manner as an HRV, but has an additional component that also allows it to transfer humidity in addition to heat. (Chapter 28)

Introduction

Electricity is a form of energy that can be easily changed to another form of energy for a useful purpose. For instance, electrical energy can be easily changed to magnetic energy to produce mechanical motion in motors and solenoids. In heating systems, electrical energy can be changed directly to heat energy. This is done by passing electrons through electric heating elements. The electrical resistance of the heating elements produces heat, which can be distributed for various purposes, including climate control.

Heat distribution in electric heating systems is accomplished through convection or radiation. Convection systems use electric heating elements to warm a distribution medium, such as air or water. Examples of convection electric heating systems are forced-air electric furnaces, duct heaters, electric baseboard heating units, fan heaters, and electric boilers. Radiant heating systems directly warm occupants or warm a central mass that radiates heat to other objects, including occupants. Examples of electric radiant heating systems include infrared heaters and electric heating elements embedded in floors or in panels mounted on walls or ceilings.

Video

- Electric Heating Systems

43.1 Principles of Electric Resistance Heating

Electric resistance heating is the process of producing heat by conducting electricity across electric heating elements. An electric heating element is made from metal that generates heat as electrons overcome the metal's electrical resistance. Heating elements are sized and designed to permit a certain current to flow to produce a certain amount of heat. In this way, a known amount of electrical energy is being changed into a known amount of heat energy. The relationship between electrical energy in watts and heat energy in Btu/hr is shown in the following equations:

1 watt = 3.413 Btu/hr
100 watts = 341.3 Btu/hr
1,000 watts (1 kW) = 3,413 Btu/hr

HVACR technicians working with electric heat need to be mindful not only of watts and Btu/hr, but also of voltage and amperage. The high electrical power consumption of electric heat means that supply voltage levels affect the amount of current drawn and the gage of wiring used. The Watt's law equation shows the relationship among current, voltage, and electrical power:

$$P = I \times E$$

P = power (watts)
I = current (amperes)
E = electromotive force or voltage (volts)

Example:

Using the above equation, an HVACR technician can keep track of power, voltage, and current in electric heat applications. For example, what is the maximum amount of heat energy that can be produced by an electric heater circuit with a 20 A maximum capacity and a 240 V supply?

Solution:

Before calculating heat energy, determine the heater circuit's electrical power in watts by multiplying voltage and amperage.

$$P = I \times E$$
$$P = 20\text{ A} \times 240\text{ V}$$
$$P = 4{,}800\text{ W}$$

After determining electrical power, multiply the wattage by 3.413 to determine the amount of heat energy in Btu/hr.

$$4{,}800\text{ W} \times 3.413 = 16{,}382\text{ Btu/hr}$$

An electric heating system can produce a certain number of Btu per hour (Btu/hr). A certain number of Btu per hour must be produced in order to maintain a certain temperature in a building. Thus, an electric heating system installed in a building must be able to produce more than the minimum number of Btu per hour needed to maintain the building's temperature.

Example:

If a home needs 50,000 Btu/hr for heating, how much electrical power per hour will the home need to consume?

Solution:

To convert Btu/hr to electrical power, divide 50,000 Btu/hr by 3,413. This converts Btu/hr to electrical power in kilowatts.

$$50{,}000\text{ Btu/hr} \div 3{,}413 = 14.65\text{ kW}$$

The calculated value is the minimum heat-producing capacity that a system can produce to maintain temperature. Therefore, the combined heat capacity of the electric heating elements used in the system should meet or exceed this value to ensure that temperature can be maintained.

Upon confirming that an electrical system can provide enough power to the heating system to produce the Btu per hour required to keep a building comfortable, an HVACR technician can consider other decision factors, such as the cost to operate the heating system and the labor and supplies required for wiring the system. Electric utility companies charge for electricity consumption based on kilowatt-hours. A technician can determine an electric heating system's cost of operation using the utility company's kilowatt-hour rates.

43.2 Electric Heating Elements

Electric heating elements are conductors through which electrical current is passed in order to produce heat. Electric heating elements may have fins or other attachments to increase their surface area and promote heat transfer. Elements are divided into three basic types:

- Open wire.
- Open ribbon.
- Tubular cased wire.

43.2.1 Open Wire

The term ***open wire*** describes uninsulated electric heating wires. Open wire heating elements are used in duct heaters, electric furnaces, and some heat pump air handlers. These wires are often formed into coils,

Copyright Goodheart-Willcox Co., Inc.

allowing more wire to be used in a smaller space. The more wire used in a given location, the more heat that can be produced. Coiled wire also helps the manufacturer attain a controlled resistance. Open wire heating elements usually consist of nickel chromium (nichrome) wire that is mounted on ceramic or mica insulation, **Figure 43-1**.

43.2.2 Open Ribbon

The term ***open ribbon*** describes uninsulated electric heating elements that are composed of flat strips. Some open ribbons are made from a mesh of metal foil that is formed into thin strips. Like open wires, open ribbons are made of nichrome and are mounted similarly in appliances. With a thin, flat surface, a ribbon design provides more surface area for air contact than a straight, uncoiled open wire.

Safety Note

Heating Element Shock

Open wire and open ribbon elements must be carefully protected. They cannot be allowed to contact any metal objects, else they could short out or energize the object. Open electric elements should be kept out of reach of people to prevent electrical shocks and short circuits.

43.2.3 Tubular Cased Wire

A ***tubular cased wire*** consists of a nichrome heating element surrounded by a magnesium oxide powder and enclosed in a heat- and corrosion-resistant steel tube. Tubular cased wires are sometimes referred to as calrod heating elements. The tubular casing protects against electrical shock while still allowing the element to reach high temperatures. Tubular cased wires are sometimes placed in fin-type aluminum castings. This increases the heating surface and reduces the danger of excessively high temperatures. A common application of tubular cased wire is in electric appliances, such as ranges and washing machines. See **Figure 43-2**.

43.3 Electric Heating Systems

Electric heating systems can vary greatly in size and application. These systems may be used for heating operations in industrial processes, such as the fast drying of paints or the melting of low-temperature metals or metal alloys. Electric heat may also be used for domestic and commercial cooking and baking. Different electric heating systems meet the needs of consumers through various applications.

In residential applications, electric heating may be used as the primary heating system, or it may be used

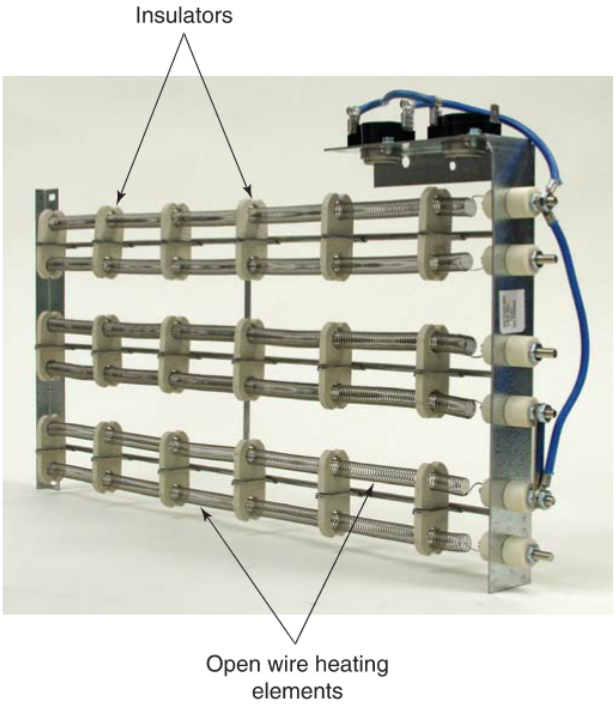

Tutco, Inc.

Figure 43-1. Open wire heating elements used in an electric furnace.

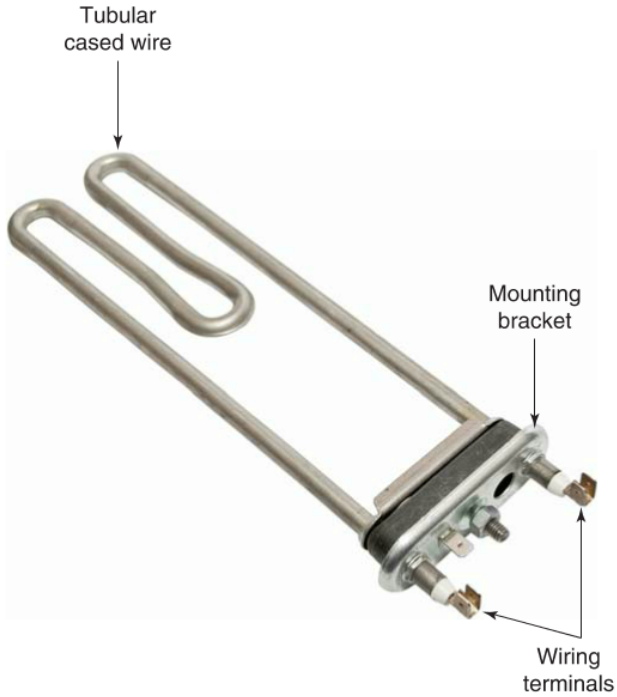

oksana2010/Shutterstock.com

Figure 43-2. A tubular cased wire used to heat water for a washing machine.

Copyright Goodheart-Willcox Co., Inc.

as an auxiliary heating system. Electric heat is often used to provide heat in sections of buildings that are not easily heated, such as in building additions and in areas where using the primary heating system would be unsafe. If a primary heating system does not have enough capacity to heat a building well and a replacement system would be too costly, electric heat can supplement the present system.

43.3.1 Electric Furnaces

An ***electric furnace*** consists of a central air handler with electric heating elements that are used to warm circulating air for a conditioned space. Electric current that passes through the heating elements produces the heat for distribution. Electric furnaces have capacities ranging from 34,000 Btu/hr (10 kW) to 120,000 Btu/hr (35 kW), **Figure 43-3**.

Electric furnaces usually have several heating elements or banks of elements. Each element consumes from 5 kW to 10 kW of electrical energy to produce between 17,000 Btu/hr and 34,000 Btu/hr of heat. Each heating element is energized in a specific order by a sequencer. The sequencer energizes each heating element one after the other about 30 seconds apart. This gap in time helps to minimize an electric furnace's initial current draw, which may cause a noticeable disturbance in a building's electricity use, such as a lowering or flickering of lights. Sequencers are covered in greater detail later in this chapter.

Electric furnaces are typically controlled by a low-voltage thermostat with two or more heat stages. A heat stage is an appliance setting at a certain level of heat output. For example, stage 1 may produce a low or middle amount of heat production, during which only one-half of the heating elements are energized. Stage 2 may be the full level of heat production, during which all of the heating elements are energized. With programmable thermostats, these heat stages are put into operation from 0.5°F to 1.5°F (0.3°C to 1°C) apart. In older thermostats operated by a bimetal coil and mercury switch, however, the temperature difference between the two heat stages is set at 1.5°F (1°C). The first stage brings on at least 50% of the furnace's capacity, and the second stage energizes all the heating elements for the furnace to operate at 100% capacity.

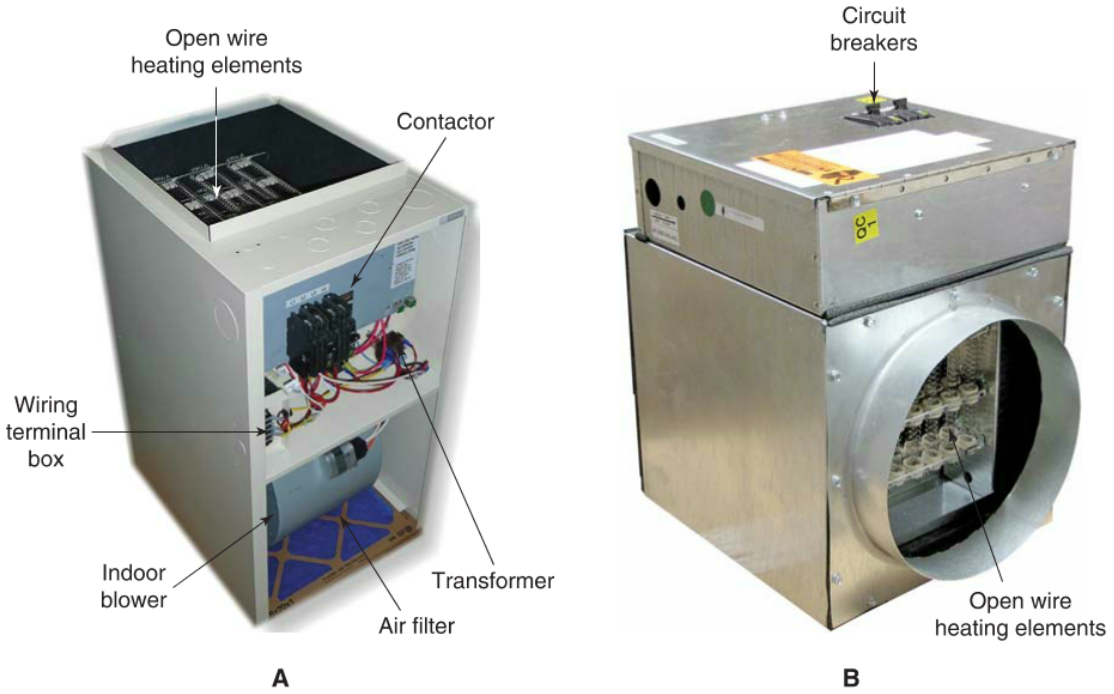

King Electrical Mfg. Co.; Heat Controller, Inc.

Figure 43-3. Electric furnaces generally have fewer controls and operating parts than heat pumps and combustion heating systems. This makes them more straightforward to install, service, and troubleshoot. A—An electric furnace with the electric heating unit already installed inside the air handler. B—An electric heating unit that can be added to an air handler to convert it into an electric furnace.

Copyright Goodheart-Willcox Co., Inc.

Code Alert

Electric Furnace Sizing

ACCA Manual S requires that furnaces be sized no greater than 140% of the heat load (that is, no more than 40% oversized). Often, an oversized furnace must be selected due to limitations in available furnace capacities. Choosing a multistage unit offsets some of the disadvantages of needing to use an oversized unit.

Thinking Green

Heat Stages

Staging the amount of heat using a thermostat helps balance heat load and heat loss. When the heat load is low, a furnace operates on the first stage, which saves energy and reduces power consumption.

Electric furnaces are often smaller than oil and gas furnaces of similar heating capacities. Also, electric furnaces do not require connections to a gas line or oil line. Electric furnaces do not remove moisture from the air, so a humidifier is seldom necessary with electric heat. Since electric heating elements are not position-sensitive, electric furnaces can be installed as upflow, downflow, or horizontal furnaces. These characteristics allow electric furnaces to be installed in more compact and diverse places than oil or gas furnaces.

Caution

Electric Furnace Orientation

While electric heating elements are not position-sensitive, some control devices, such as mercury contactors and some types of relays, are position-sensitive and need to be installed in a certain orientation to operate properly. Also, some manufacturers may require certain control devices to be located below or to one side of heating elements, rather than above where they may trip off the system unnecessarily. Before installing an electric furnace in a downflow or horizontal flow position, check its control components and manufacturer literature to see if any part will need to be positioned in a certain orientation for proper operation.

An electric furnace is a convenient option to provide building heat in many applications. However, since an electric furnace can only produce heat and cannot absorb heat, a technician may install an evaporator coil onto the air handler that connects to a remote condensing unit for use in the cooling season, **Figure 43-4**.

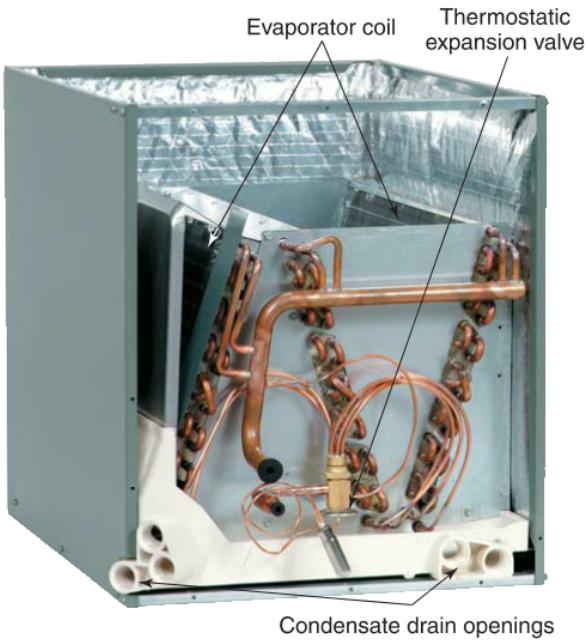

Rheem Manufacturing Company

Figure 43-4. An evaporator coil already in a sheet metal body ready to be added onto an air handler.

43.3.2 Duct Heaters

A ***duct heater*** is an array of electric heating elements contained in a single unit that can be installed in a run of ductwork. A system thermostat or a zone thermostat is used to control duct heater operation, **Figure 43-5**.

Rather than having a forced-air electric furnace as a primary heating system, a building may have a central air handler with duct heaters heating individual rooms. When used as the primary heating system, electric duct heaters provide individual room temperature

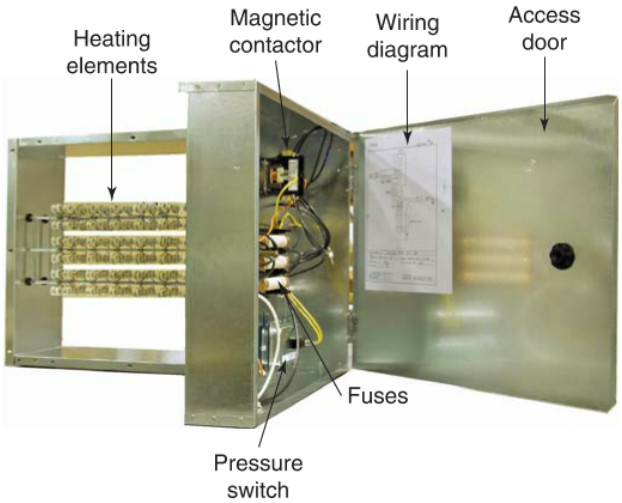

Tutco, Inc.

Figure 43-5. A duct heater with its access door open, revealing the heating and control components.

11

Copyright Goodheart-Willcox Co., Inc.

control. Individual room thermostats allow occupants to govern duct heater operation, providing a form of zone control.

Duct heaters may be designed to slide into a slot opening in the side of a run of ductwork, or they may be installed at a flanged opening between two sections of ductwork, **Figure 43-6**.

Duct heaters may also be used to supplement other heating systems, such as forced-air heat pump systems during very cold weather. When weather conditions only permit a heat pump to produce somewhat warm air or when a heat pump is in defrost mode, duct heaters provide supplementary heat to boost the temperature of circulated air. Duct heaters also work well as supplementary heat for room or building additions and other conditioned spaces that are difficult to regulate.

Even when duct heaters are used as a supplementary heating system, the principle of zone control may be applied, especially in large commercial buildings with long runs of ductwork. For instance, a temperature sensor near the primary heat source may end the call for heat early, leaving remote rooms located at the end of long runs of ductwork cooler than rooms closer to the system's heat source. On the other hand, a temperature sensor near the end of a long run of ductwork may leave the heat on longer than normal to warm the more remote rooms. This results in the rooms closer to the heat source being warmed too quickly before the remote rooms have been warmed. Installing and properly controlling duct heaters near the end of the duct run solves this problem by supplying additional warmth to these remote rooms, producing a more uniform temperature throughout the whole building.

In some cases, duct heaters may also be used during the cooling season. In a large building in which cold air quickly cools the rooms located near the cooling coils, the thermostat may not turn off the cooling cycle until more remote rooms have been cooled. As a result, rooms closer to the cooling coils become too cold while rooms farther from the cooling coils are just moderately cool. A duct heater located in the ductwork to a quickly cooled room can raise the temperature of the incoming air using a room thermostat for control. Such installations are not very common but may be desirable to produce more uniform cooling and temperature control throughout a building.

Code Alert

Duct Heaters

Section VI of Article 424 of the National Electrical Code (NEC) covers the requirements for duct heaters. Important topics covered include airflow, fan circuit interlock, limit controls, location of disconnection means, condensation compatibility, installation requirements, and use with air conditioner and heat pump systems. Section M1407 of the International Residential Code (IRC) provides duct heater installation requirements for one- and two-family dwellings.

43.3.3 Fan Heaters

A ***fan heater*** is a type of convection heater that uses electric heating elements to produce warm air, which is distributed to a conditioned space by a fan.

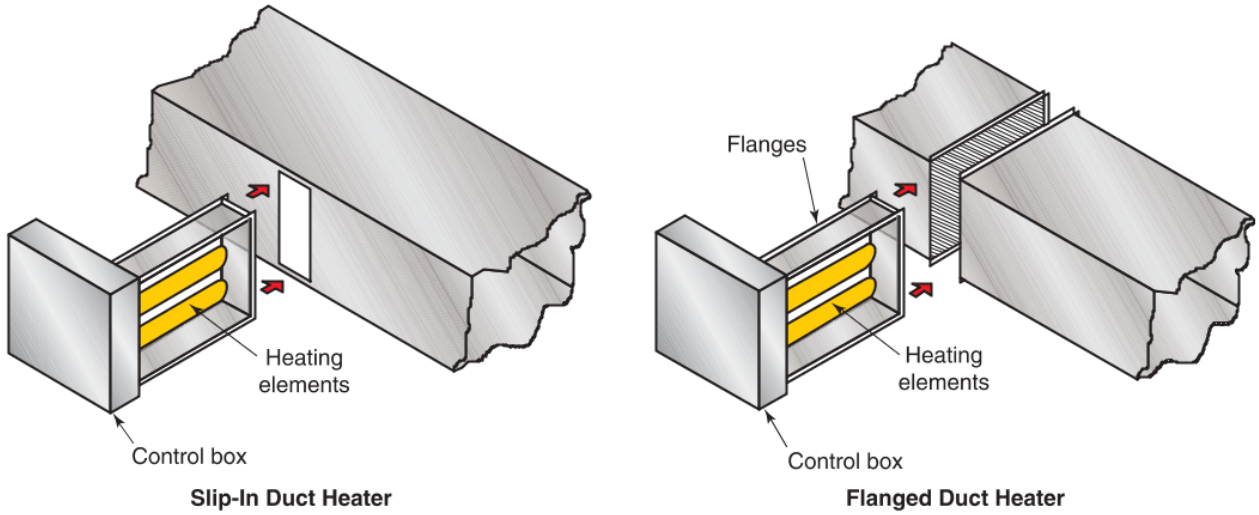

Tutco, Inc.

Figure 43-6. Diagrams showing how slip-in and flanged duct heaters are installed.

Copyright Goodheart-Willcox Co., Inc.

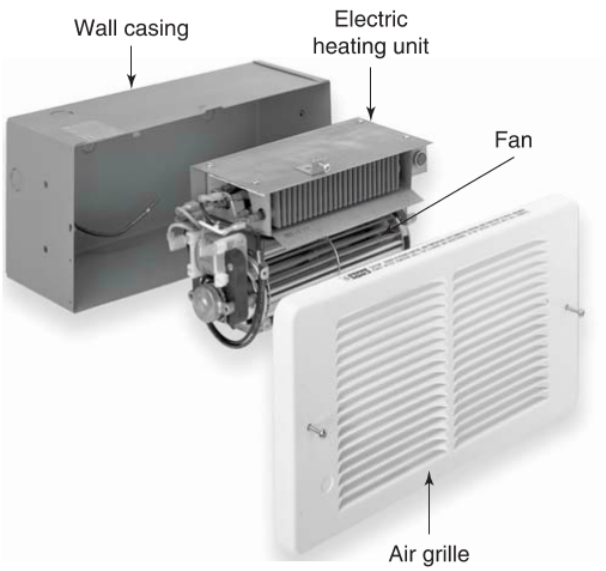

King Electrical Mfg. Co.

Figure 43-7. A fan heater installed in a metal casing designed to be mounted in a wall opening.

While small, portable fan heaters are available, permanently installed fan heaters are mounted in a casing in a wall opening, usually a few feet up from the floor, **Figure 43-7**.

Fan heaters are typically used as a supplementary heat source, such as building entryways. Often, fan heaters are built to look like little more than wall vents, **Figure 43-8**.

43.3.4 Electric Baseboard Heating Units

An ***electric baseboard heating unit*** consists of an electric heating element in a casing that is mounted close to the floor on a wall, usually under windows. These units are shaped much like a regular baseboard, **Figure 43-9**.

An electric baseboard unit's casing is designed to efficiently move air over the heating element by natural convection. Air expands and becomes lighter when heated. As a result, warm air rises as it exits a baseboard heating unit. Cool air, which is heavier, settles to the lower opening of a baseboard heating unit and enters the unit to replace the rising heated air. See **Figure 43-10**.

Baseboard heating units are available in lengths ranging from approximately 36″ to 100″ (0.9 m to 2.5 m). Some baseboard units have only one heating element, while others have two or more elements connected in parallel. For instance, a stairstep baseboard heating unit has several heating elements in a stair arrangement. Stairstep units direct airflow so that air near the wall is cooler than air farther from the wall. See **Figure 43-11**.

Baseboard heating units run on 240 V more often than on 120 V. This is because if two baseboard units are rated for the same wattage, a baseboard unit running on 240 V pulls half the current as a baseboard unit running on 120 V. An advantage of using a higher voltage to pull fewer amps is in material cost. The fewer amps a circuit requires, the smaller the wire gage can be. More amps require a higher gage wire. In most cases, the higher the wire gage, the more expensive it is. For most baseboard

Cadet Manufacturing Co.

Figure 43-8. Many fan heaters appear as regular wall vents but with a control switch or knob.

Copyright Goodheart-Willcox Co., Inc.

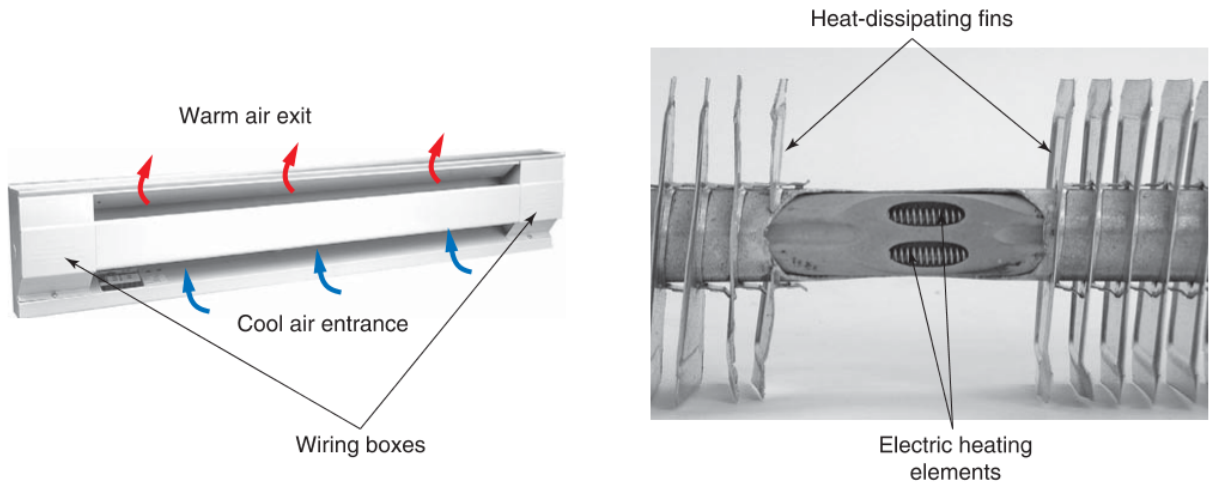

Electric Baseboard Heating Unit **Electric Heating Element**

Cadet Manufacturing Co.; King Electrical Mfg. Co.

Figure 43-9. Electric baseboard heating units are designed to inconspicuously conceal the heating elements and wiring so that they blend into a room.

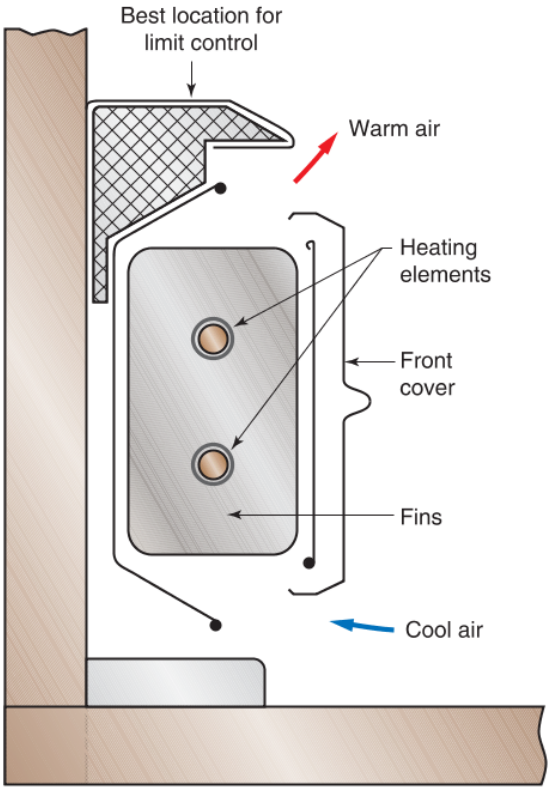

White-Rodgers Division, Emerson Climate Technologies

Figure 43-10. Side view of an electric baseboard heating unit. Since cool air is heavier than warm air, natural convection sufficiently circulates the air in a room.

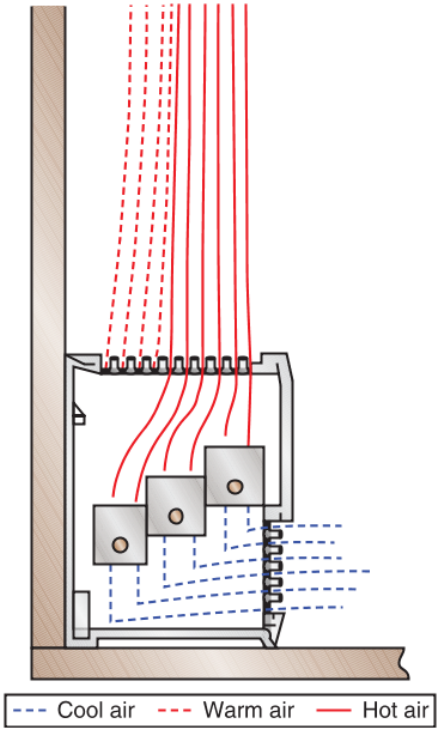

QMark, A Division of Marley Electric Heating

Figure 43-11. Side view of a stairstep baseboard heating unit with three heating elements.

Copyright Goodheart-Willcox Co., Inc.

unit installations, it is good practice to keep the current load to 20 A or less per circuit. As a result, the use of 240 V circuits, where practical, is desirable.

Example:

If a room needs 10,000 Btu/hr to remain comfortable, a technician may install a baseboard heating unit rated at 3,600 W. According to calculations, the unit would produce sufficient heat (3,600 W × 3.413 Btu/hr = 12,287 Btu/hr). However, the wiring to the room is rated for 25 A. Should a technician install a 3,600 W baseboard unit rated at 120 V or 240 V?

Solution:

To determine which baseboard heating unit to use, calculate each unit's current draw using the formula for electrical power ($P = I \times E$). First, rearrange the equation to solve for current, then substitute the known values for power and voltage:

Baseboard unit rated at 120 V:

$$I = \frac{P}{E}$$
$$= \frac{3{,}600\ \text{W}}{120\ \text{V}}$$
$$= 30\ \text{A}$$

An electrical power of 3,600 W at 120 V will draw 30 A of electrical current. The electrical wiring to the room's baseboard units is only rated for 25 A. Calculate the current drawn for the baseboard units at 240 V:

Baseboard unit rated at 240 V:

$$I = \frac{P}{E}$$
$$= \frac{3{,}600\ \text{W}}{240\ \text{V}}$$
$$= 15\ \text{A}$$

Since a baseboard unit rated at 120 V and 3,600 W would pull 30 A, it cannot be used with the present wiring, which has a maximum current rating of 25 A. A baseboard unit rated at 240 V and 3,600 W will work well in this application because it draws only 15 A.

Code Alert

Allowable Ampacity

Electrical wiring is designed and manufactured for specific applications and for use at maximum allowable ampacity levels. Current flowing through electrical wiring generates heat. Insulation around wiring prevents current from causing fires and from conducting outside a circuit. Table 310.15(B)(16) of the National Electrical Code (NEC) lists allowable ampacities for different types and sizes of wire.

Caution

Baseboard Unit Voltage Ratings

Baseboard units are generally designed to operate at either 120 V or 240 V. These values are not interchangeable. Connecting a 240 V circuit to a baseboard unit rated at 120 V will ruin the baseboard unit. Always check with manufacturer specifications to be certain of a baseboard unit's rated voltage level.

43.3.5 Electric Radiant Heat

Electric radiant heat describes systems that use heating elements to radiate heat that primarily warms objects instead of air. Radiant heat may be produced by methods other than electricity, such as a fuel gas flame. In this section, however, we will focus on electric radiant heat, which is generally used in two different ways: directly and indirectly.

Direct Radiant Heat

For ***direct radiant heat***, the heating elements are mounted in a fixture that focuses the heat energy emitted by the elements on the objects to be warmed. In other words, the heat energy primarily warms the objects it directly strikes rather than the air. The assembly of heating elements mounted in a fixture may be called a *radiant heater*, a *radiant lamp*, an *infrared heater*, or a variety of similar names.

Glass panel heaters are also available. A glass panel heater has heating elements installed on the back of borosilicate glass, which is then covered with a reflective surface. The elements operate at about 500°F (260°C). The glass surface is about 350°F (180°C). It gives off about 60% radiant and 40% convective heat.

Radiant heaters emit infrared light to warm objects in their line of sight. See **Figure 43-12**. Objects absorb the infrared light energy and become warmer. However, radiant heat decreases as the distance increases between a radiant heater and the object it is warming. For instance, an object twice as far from a radiant heater will receive only one-fourth as much heat. A simple example of a small radiant heater is a toaster. The nichrome wires conducting electricity radiate heat to toast foods inside.

Radiant heat rays, if focused on a person who has several square feet of surface area to absorb the rays, will keep that person quite comfortable, even if the ambient air temperature is below the comfort range. An example of where direct radiant heat is a viable heating option is in a large warehouse with a few small areas where employees work. While it would be costly to heat the entire warehouse using a forced-air heating system, direct radiant heat can be used to warm the few small areas where employees usually work.

Copyright Goodheart-Willcox Co., Inc.

Olena Zaskochenko/Shutterstock.com

Figure 43-12. A radiant heater, or infrared heater, used to heat small areas.

Radiant heaters may have a 45°, 60°, or 90° reflection angle, depending on the size of the area that needs to be heated, **Figure 43-13**.

Code Alert

Residential Radiant System Installation

Section M1406 of the International Residential Code (IRC) provides requirements for installing electric radiant heating systems in one- and two-family dwellings.

Indirect Radiant Heat

For ***indirect radiant heat***, heating elements produce heat that warms a large surface, such as a floor or a panel on a ceiling or wall, which then radiates its heat to the solid objects in a conditioned space. Thus, the heating elements indirectly heat the objects in a conditioned space. In most cases, the heating elements are embedded in a floor, wall, or ceiling or in a panel attached to one of these surfaces. Since indirect radiant heat warms a surface before warming the conditioned space or occupants, it is also called *surface radiant heat*.

Heavy insulation installed on one side of the heated surface prevents heat from escaping into unconditioned spaces or into conditioned spaces in a different zone. The other side of the heated surface faces the conditioned space. When energized, the heating elements warm the surface in which they are embedded. The amount of heat radiated by an indirect radiant heating system can provide a very comfortable living environment, even in a location where the temperature of the air is lower than usual, such as 66°F (19°C). A thermostat mounted on a wall controls room temperature by changing the amount of current passing through the heating elements. **Figure 43-14** illustrates a typical radiant ceiling panel installation.

Code Alert

Electric Space-Heating Cables

Section V of Article 424 of the National Electrical Code (NEC) covers the requirements for electric space-heating cables. Important topics covered include cable color identification codes (by voltage level), clearances, restricted areas, and use in concrete, poured masonry, dry board, and plaster.

Electric radiant floor heating is also used in both residential and commercial applications. This method uses heating elements embedded beneath a floor's surface. The heating elements are typically made of conductors with a diameter of 1/8″ (3 mm) and a center-to-center distance of 3″ (76 mm). Controlled by a wall-mounted thermostat and a temperature sensor

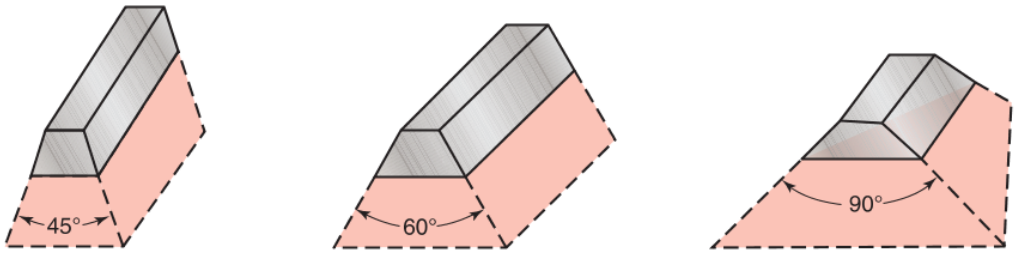

Goodheart-Willcox Publisher

Figure 43-13. Radiant heater reflection angles are selected based on space and heat requirements.

Copyright Goodheart-Willcox Co., Inc.

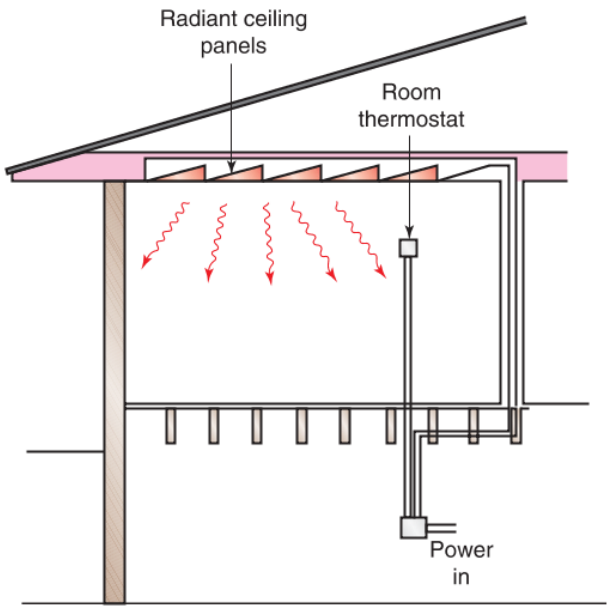

Goodheart-Willcox Publisher

Figure 43-14. Radiant heat is supplied by electric heating elements embedded in ceiling panels. Heavy insulation is needed with a radiant ceiling panel installation to prevent heat from escaping to an unconditioned attic.

embedded in the floor, the heating elements have an output of about 12 W/ft^2 (130 W/m^2). To minimize the time required to heat a room, high-emissivity insulation, such as polyurethane foam or mineral wool and reflective foil, should be installed. This also helps to control the direction of heat flow.

Electric radiant floor heating can be used as a supplementary heating system or as a primary heating system with separate circuits for zone control. Although radiant floor heating primarily warms objects through radiant heat, it also provides convective heat by warming the ambient air somewhat. As a result, radiant floor heating has excellent heat distribution compared to convective heating methods, such as forced air. Compared to baseboard heating units, indirect radiant heat produces much less room temperature variation. Temperature variation between the floor and ceiling with baseboard heating units can be between 4°F and 15°F (2°C and 8°C). With indirect radiant heating systems, temperature variation between the floor and ceiling is between 4°F and 5°F (2°C and 3°C).

In certain installations, radiant floor heating can be used to store heat in a large mass for a slow, gradual release over time. If electricity is billed by time of use, the heating elements can be used during non-peak billing times to store thermal energy in a concrete slab beneath a floor's surface. Depending on the thermal mass of the floor, heat can be provided to a house for 8–10 hours after the system cycles off during peak billing hours.

Code Alert

Electric Radiant Heat

Section IX of Article 424 of the National Electrical Code (NEC) covers the requirements for electric radiant heat. Important topics covered include installation requirements, use in concrete or poured masonry, and use under floor covering.

43.3.6 Electric Heat for Deicing and Snow Melting

Besides climate control, electric heat can be used to melt snow and ice. For ground protection, the heating elements are installed under asphalt, concrete, or stonework. See **Figure 43-15**. Insulation should be laid on the ground before the installation to prevent downward heat loss.

Code Alert

Outdoor Deicing

Article 426 of the NEC covers fixed outdoor electric deicing and snow-melting equipment. This includes both embedded and exposed deicing equipment. Embedded equipment is considered electric heating in driveways, walkways, steps, and other related areas. Exposed equipment is considered drainage systems, bridge structures, roofs, and other structures.

King Electrical Mfg. Co.

Figure 43-15. Heating element attached to an electric heating mat ready to be installed for outdoor use.

Copyright Goodheart-Willcox Co., Inc.

Thinking Green

Radiant Snow Melting

Installation of indirect radiant heat for snow-melting applications eliminates the negative environmental impact caused by the use of chemicals or rock salt to melt snow and may reduce long-term snow removal costs. However, as the outdoor temperature drops, more power must be used. From 14°F to –40°F (–10°C to –40°C), the output ranges from 19 W/ft^2 to 46 W/ft^2 (200 W/m^2 to 500 W/m^2) respectively.

Heating elements may also be placed on roofs to prevent snow accumulation and around downspout pipes to prevent ice blockage.

Code Alert

Considered Continuous Load

Section 426.4 of the NEC states that fixed outdoor electric deicing and snow-melting equipment is considered as a continuous load. The NEC defines ***continuous load*** as "a load where the maximum current is expected to continue for 3 hours or more." Articles 210.19(A) and 210.20(A) require that circuits powering only a continuous load (for example, a circuit dedicated to deicing equipment) must have properly sized conductors and overcurrent protection of 125% of the continuous load.

43.4 Electric Furnace and Duct Heater Controls

Electric furnaces and duct heaters use many of the same control devices. A primary control, such as a thermostat, senses room temperature and signals for operation to begin. Before energizing the electric heating elements, however, both electric furnaces and duct heaters check for airflow. If there is no airflow from an indoor blower fan, the heating elements may build up too much heat. Confirming airflow minimizes the risk of high heat damaging the heating elements.

43.4.1 Airflow Switches

Some devices commonly used to confirm airflow are pressure switches, sail switches, and fan interlock relays. A pressure switch actuates based on air pressure. It may actuate based on a rise in pressure, a drop in pressure, or a difference in pressure. For example, by measuring air pressure before and after a duct heater, a pressure switch can detect airflow, **Figure 43-16**.

A sail switch, which appears as a switch assembly with a paddle or flipper attached, responds to the flow of air. A fan interlock relay locks out heating element operation until a blower fan turns on. Regardless of the type of control, pressure switches, sail switches, and fan interlock relays all perform the same function of checking for airflow before allowing the heating elements to be energized.

To prevent heating elements from overheating during shutdown, airflow should continue even after the room temperature set point is reached and the thermostat has ended its call for heat. This is done with a heat-sensitive switch, such as a bimetal disc, that is wired in parallel with the primary control. Even if the primary control opens to turn off power to the blower at the end of a heating cycle, this switch senses the heat in the duct heater or furnace and remains closed to keep the blower operating as the heating elements de-energize. Once the heating elements have been turned off and enough heat has dissipated, the switch opens to turn off the blower fan.

White-Rodgers Division, Emerson Climate Technologies

Figure 43-16. A pressure switch is typically connected to measure pressure differential to confirm airflow.

Copyright Goodheart-Willcox Co., Inc.

Pro Tip

Duct Heater Airflow

When installing a duct heater, be certain to compare airflow measurements with the manufacturer's specifications. Although a pressure switch or sail switch may detect airflow and close for heater operation to begin, it may close at an airflow level that does not meet the duct heater's minimum airflow requirement. This can lead to the heating elements overheating and breaking. A broken heating element results in reduced heat production and may also lead to a short circuit or other dangerous electrical conditions, such as ductwork that is electrically live. A live duct can lead to a dead technician.

43.4.2 Sequencers

Electric furnaces and duct heaters usually have more than one electric heating element. Heating elements draw high current, which can be disruptive to other electric appliances in a building and can blow a fuse or trip a circuit breaker. Therefore, each heating element is energized one at a time. A ***sequencer*** is a device that closes and opens its electrical contacts on a time delay for energizing a series of electrical loads in sequence. It is used to control when each heating element is energized. Sequencers are manufactured either as single, stand-alone units or as units with multiple sequencers. In an installation with multiple heating elements, one or more sequencers control the heating elements. Typically, each individual sequencer in the unit energizes its own heating element, **Figure 43-17**.

A sequencer consists of several sets of electrical contacts, a coil (wire heater), and a heat-sensitive switch. For its heat-sensitive switch, a sequencer uses a bimetal element to open and close its sets of contacts. In a sequencer with three sets of contacts, one set is rated for high current and is used to energize an electric heating element in a furnace or duct heater. Another set of contacts is used to keep the blower fan energized. The third set of contacts is rated for low current and is used to energize the next sequencer coil in the control circuit, **Figure 43-18**.

Some sequencers are equipped with five sets of contacts, allowing them to control three heating elements, the blower fan, and the low-voltage circuit connected to the next sequencer.

At the beginning of a heating cycle, a sequencer's contacts are open. When a thermostat calls for heat, the sequencer's coil is energized. The voltage applied to a sequencer across the coil produces heat at a rate that actuates the bimetal element in a specified period of time. After the specified period of time, the coil produces enough heat to close the contacts regulated by the bimetal element. One set of contacts closes to energize the first heating element. Another set of contacts closes to energize the coil of the next sequencer. This action continues until all the heating elements are energized.

Often, a blower fan relay is wired in parallel with the first sequencer in a unit. In this case, the blower fan turns on before the first heating element is turned on. If a fan relay is not wired in parallel with the first sequencer, the blower fan is controlled

Single Sequencer

Multiple Sequencers

Honeywell, Inc.

Figure 43-17. Some electric heating systems use several stand-alone sequencers to operate while others use a unit made up of multiple sequencers.

11

Copyright Goodheart-Willcox Co., Inc.

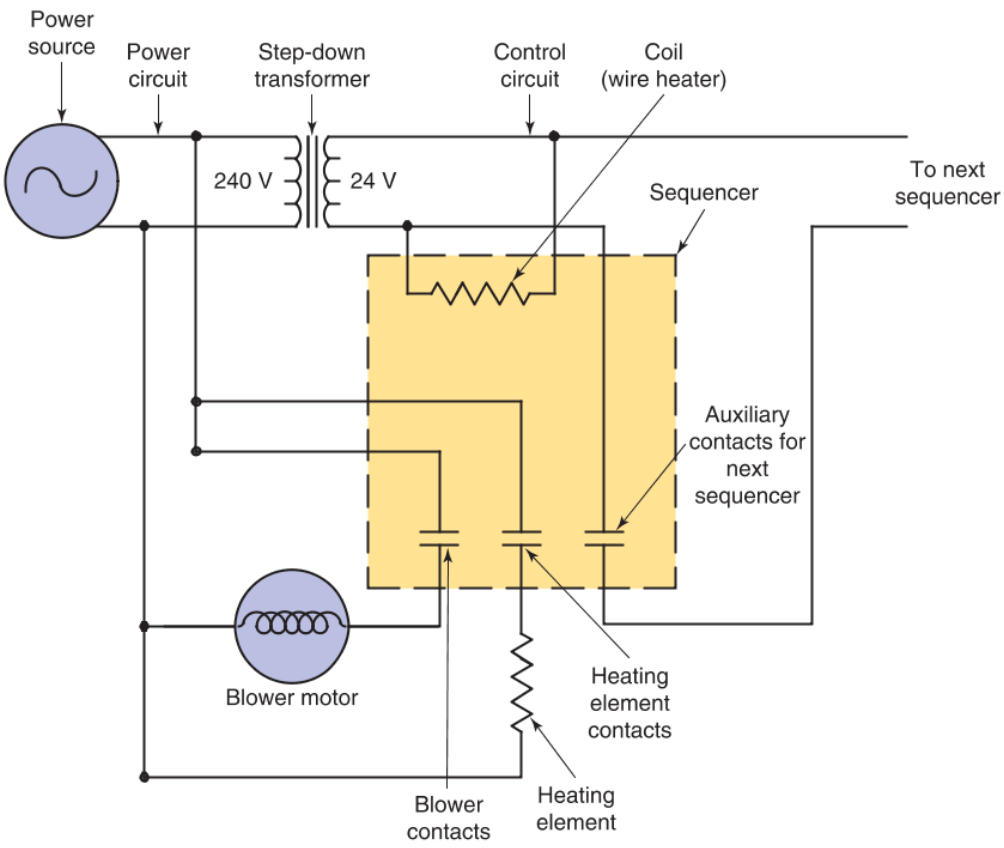

Goodheart-Willcox Publisher

Figure 43-18. Wiring diagram showing a sequencer's coil and auxiliary contacts connected to the control circuit. The sequencer's blower contacts and heating element contacts are connected to the power circuit.

by one set of contacts in the first sequencer. In this case, the blower fan and first heating element turn on at the same time.

The way an electric furnace or duct heater shuts down depends largely on a system's thermostat and the wiring of the control circuit. One method has all the control circuit's current, including the sequencer current, running through the thermostat. This method is not always desirable as the level of current may be higher than a thermostat's current rating. Most 24 V thermostats have a 1 A maximum current rating.

With the thermostat controlling the current in the control circuit, all the heating elements in the furnace or duct heater turn off at once. When the thermostat ends its call for heat and opens its contacts in the control circuit, all the sequencers and their coils become de-energized and begin to cool down immediately. Since all the sequencer coils cool at the same rate, all the heating elements in the furnace or duct heater shut off at once, **Figure 43-19A**.

An alternative wiring method has the thermostat and most of the sequencers wired in parallel in the thermostat, **Figure 43-19B**. The only sequencer that is wired in series with the thermostat is the first sequencer that begins operation. With the thermostat wired in series with only the first sequencer, each heating element in the furnace or duct heater turns off one at a time. When the thermostat ends its call for heat, it de-energizes the first sequencer's coil. After the first sequencer's cooling down period, its contacts open to de-energize two things: the sequencer's corresponding heating element and the second sequencer's coil. After the second sequencer's coil cools down, it opens its contacts to de-energize the corresponding heating element and the third sequencer's coil. In this sequential manner, each sequencer turns off its corresponding heating element one at a time. Such an arrangement requires a heat-sensing device in parallel with the fan coil contact. This blower off-delay keeps the blower operating through sequencer shutdown until heat production is reduced to a safe level.

Copyright Goodheart-Willcox Co., Inc.

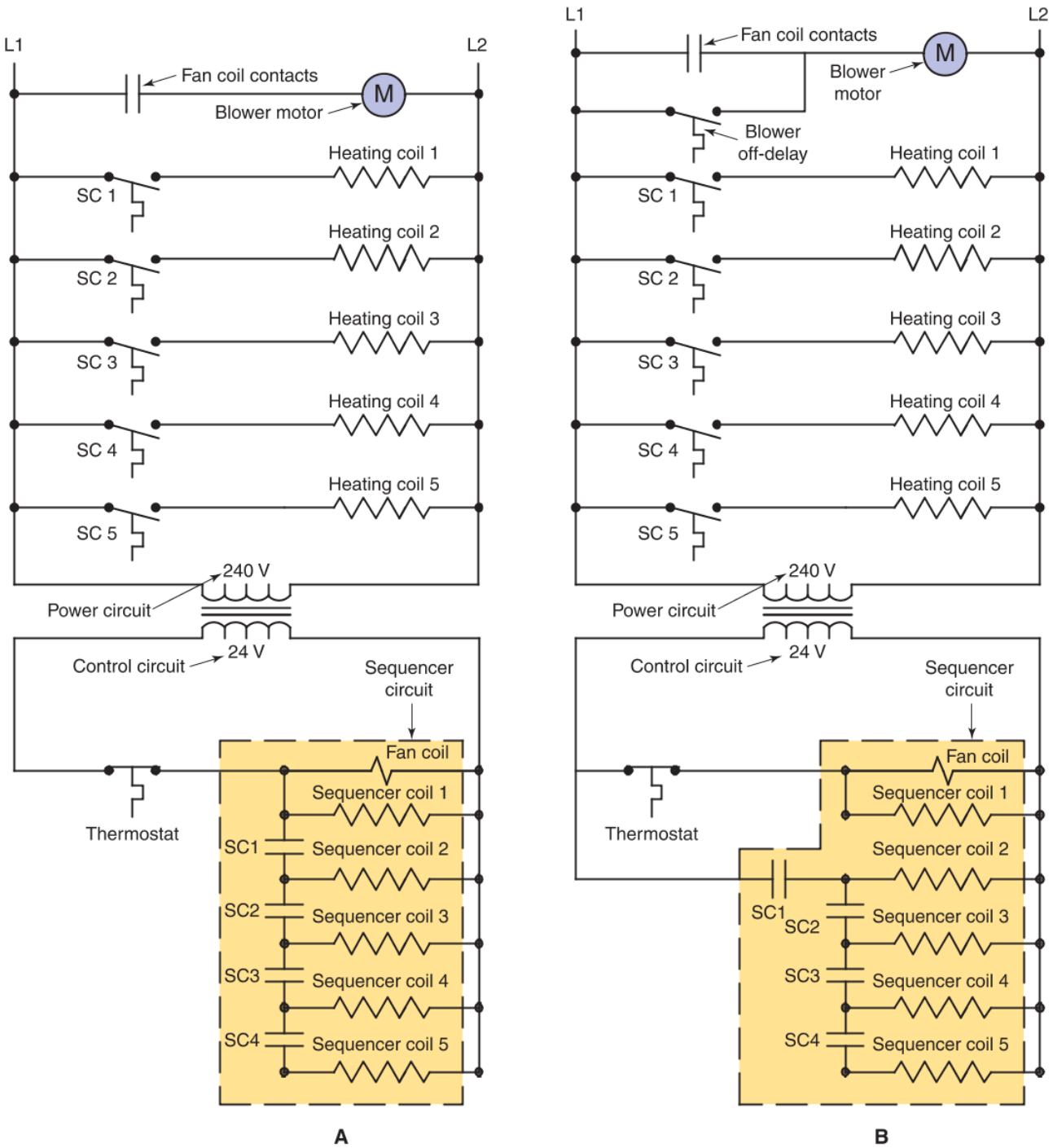

Goodheart-Willcox Publisher

Figure 43-19. An electric heating system's control circuit can be wired in two different ways to de-energize the electric heating elements. A—Control circuit with the thermostat and sequencers wired in series. B—Control circuit with most of the sequencers wired in parallel with the thermostat. Only the blower coil and the first sequencer coil are wired in series with the thermostat.

Copyright Goodheart-Willcox Co., Inc.

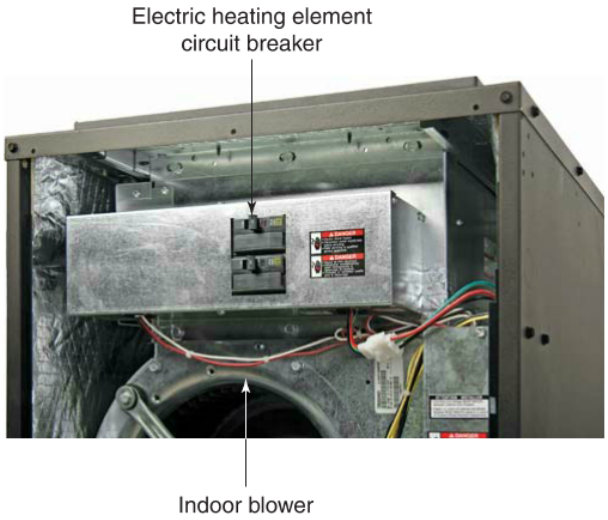

ClimateMaster

Figure 43-20. Electric heating elements equipped with circuit breakers as overcurrent protection.

Pro Tip

Sequencer Terminology

Sequencers may be called by several different names in the HVACR industry, such as *heat sequencers*, *sequencer relays*, *step controllers*, and *stage controllers*.

43.4.3 Electromagnetic Contactors

Instead of sequencers, electromagnetic contactors may also be used to open and close the circuit feeding the heating elements. With contactors, however, all of the heating elements are energized simultaneously unless separate contactors with time-delay functions are used for each element. Check that the contactors are designed to carry the amount of current that is conducted by a duct heater or furnace. For more information on contactors, review Chapter 16, *Electrical Control Systems*.

43.4.4 Mercury Contactors

Electromagnetic contactors are seldom used in electric furnaces and duct heaters because the hard hitting of the contacts produces a sound that reverberates through the ductwork into conditioned spaces. As a result, contactors are usually used in commercial systems where they are not attached to the ductwork. To eliminate this sound, some older units may be equipped with a mercury contactor. A ***mercury contactor*** is a switching device that immerses its electrodes into a small pool of mercury for electrical contact. This device fulfills the same function as an electromagnetic contactor but does so silently. Solid-state relays are another alternative to electromagnetic contactors for noiselessly switching furnaces and duct heaters on and off.

43.4.5 Safety Controls

In the event that a circuit pulls too much current, such as from a short in the circuit, circuit breakers open or fuses blow to break the circuit and stop the high current, **Figure 43-20**. Excessively high current can be dangerous to technicians and damaging to property. However, not all duct heaters are required to have fuses. Those that do have fuses usually have them in the control box.

In addition to having overcurrent protection devices, duct heaters and electric furnaces have other safety controls to protect them from overheating. Overheating can occur for a variety of reasons. For instance, a blower motor can burn out and stop circulating air, which would lead to a buildup of excessive heat. Supply and return air ducts can be blocked by large objects, which would also reduce airflow and cause excessive heat buildup. There are numerous other circumstances that can cause an unsafe rise in heat capable of damaging electric heating components. Safety controls used to prevent such occurrences are called high-temperature safety cutoffs or high-limit switches.

A high-temperature safety cutoff is usually a bimetal disc or a fusible link. A bimetal disc is composed of two dissimilar metals that react to temperature by changing shape, which opens or closes an electrical switch. A bimetal disc is wired in the control circuit to turn off power to the electric heating elements. Some electric furnaces or duct heaters use two bimetal discs that are calibrated at two different temperature settings. The first bimetal disc is set to trip open the heating elements at a certain high temperature, and the second bimetal disc is set to trip open at a higher temperature than the first bimetal disc. The first bimetal disc usually resets automatically when the temperature drops below the calibrated set point. However, the second bimetal disc requires manual resetting. This is intentional so that a service technician will realize there is some problem in the system causing the rise in temperature that needs to be fixed.

Aside from a bimetal disc, an electric furnace or duct heater may also use a fusible link as a high-temperature safety cutoff. A ***fusible link*** is a heat-sensitive device that opens an electric circuit when the temperature rises too high. Like a bimetal disc,

Copyright Goodheart-Willcox Co., Inc.

a fusible link is wired to turn off the electric heating elements. Unlike a bimetal disc, however, a fusible link cannot be reset. A fusible link must be replaced once it has been opened. Rather than just replacing a fusible link, a service technician should investigate why the temperature rose too high, **Figure 43-21**.

43.5 Electric Baseboard Heating Unit Controls

Electric baseboard heating units are controlled by their own thermostats. Since each room in a building would have its own baseboard heating unit with its own thermostat, occupants can regulate each room's temperature independently without adjusting the temperature of the entire building. The independent adjustment of individual baseboard units is an easy form of decentralized zone control that does not require extra controls or automatic duct dampers.

Although some baseboard heating units can run on 120 V, the majority run on 240 V. Producing heat through electrical resistance requires a significant amount of current. As a result, baseboard heating units are often wired on their own separate, dedicated circuits to avoid drawing too much current that could result in voltage drops or damage to property. No lights, appliances, or electrical sockets should be placed on these circuits, only the baseboard unit. Some manufacturers include outlets on their baseboard units, **Figure 43-22**. Review the owner's manual before connecting to these outlets.

Code Alert

Baseboard Receptacle Outlets

Section 424.9 of the NEC states that electrical receptacle outlets included as part of a baseboard heating unit shall not be connected to the heater circuit. This means that the heating elements will be on a completely separate circuit from the electrical outlets in the same assembly.

Thermostats for baseboard units may have a single-pole or double-pole switch. A single-pole thermostat

DiversiTech Corporation

Figure 43-21. A fusible link acts as a high-temperature safety cutoff by opening the circuit that de-energizes the electric heating elements in an electric furnace or duct heater.

Cadet Manufacturing Co.

Figure 43-22. Since electrical outlets should not be installed above baseboard heating units, manufacturers may produce baseboard units that include installed outlets.

Copyright Goodheart-Willcox Co., Inc.

opens only one leg of the 240 V circuit. Baseboard heat uses two hot legs to get 240 V. Using a single-pole switch is generally considered less safe than a double-pole thermostat, so single-pole thermostats are used less frequently. A double-pole thermostat opens both legs of the 240 V circuit, reducing the risk of grounds or shorts.

Code Alert

Thermostats as Disconnecting Means

Section 424.20 of the NEC provides requirements for using a thermostat as a controller and also as a disconnecting means in fixed electric space-heating equipment, such as baseboard heaters. These must meet four requirements as follows: (1) Have a marked "off" position. (2) Must directly open all ungrounded conductors when manually placed in the "off" position. (3) Designed so that the circuit cannot be automatically energized after the device has been manually placed in the "off" position. (4) Located as specified in Section 424.19. If a thermostat does not meet these requirements, a separate disconnecting means must also be installed in the circuit.

There are two main ways of wiring thermostats for an electric baseboard heating unit. One way incorporates the thermostat into the baseboard unit. Built-in thermostats are generally used for baseboard units that are plugged into a dedicated wall outlet, **Figure 43-23**.

The second way is to use a wall thermostat to control the baseboard heating unit. Wall thermostats are generally used to control baseboard units that are hardwired to the building's electrical system.

Code Alert

Wiring Baseboard Units

When wiring 240 V for electric heat, check local electrical codes to see which color wires should be used and how to indicate that a circuit is 240 V. Local authorities may have different methods of addressing this issue.

43.6 Electric Heat Construction Practices

Electric heating systems are considered less complicated than other forms of heat generation for climate control. The principles of heat generation are straightforward, and the methods of heat distribution are simple. Some advantages of electric heating systems include the following:

- Lower initial purchase price and installation cost.
- Electric heating equipment normally requires less space than other heating equipment.
- No ductwork required for certain applications, such as baseboard heating units and fan heaters.
- Electric heating systems are 100% efficient because no heat is lost to the products of combustion as in other heating systems.

Nonprogrammable Bimetal Thermostat

Electronic Programmable Thermostat

Cadet Manufacturing Co.

Figure 43-23. Two types of thermostats that are built into baseboard heating units.

Copyright Goodheart-Willcox Co., Inc.

- The highest temperatures produced are below the ignition temperature of most materials. Therefore, electric heating systems are considered safer and less of a fire hazard than other heating systems.
- Due to the absence of combustion gases, there is less danger of toxic conditions arising indoors, and no flue or chimney is needed.
- Many types of electric heat allow individual room temperature control, giving a building zoned climate control. Conditioning only rooms that have occupants instead of an entire building reduces energy consumption and energy costs.
- Very clean operation (no soot or combustion by-products).

Electric heating systems also have some disadvantages:

- The cost per unit of heat is often higher than for other fuels. However, this varies depending on city, county, or state. Costs of fuels change frequently, making some more expensive than others.
- The consumption of more kilowatt-hours of electricity than a heating system that uses a different heat source.
- Humidity control problems may occur.
- Additional wiring and electrical circuits are required.
- The danger of working on high-voltage wiring that draws a lot of current.

Diversity in equipment manufacturing allows electric heat to be used as the primary heating system for an entire building or as a supplementary heating system in smaller applications. Various applications of supplementary heat include a wall-mounted fan heater near an entryway, radiant heat panels built into a wall or ceiling, and baseboard heating units installed along walls. Supplementary electric heat is often used to condition building additions, such as added bedrooms or utility rooms. The original heating system may not have enough capacity to carry the extra load of heating any additions, or extending the original heating system to the addition may be difficult or expensive. Electric heat may also be used to heat a room that is rarely in use, thereby reducing overall energy consumption.

Problems in buildings with electric heat usually involve the need for insulation or ventilation. The lack of proper insulation or ventilation results in problems such as excess relative humidity and longer system run times. These problems may be more prevalent or apparent in buildings that were originally built with heating systems other than electric. The building should be modified to reduce heat transfer and air exfiltration.

43.6.1 Heat Loss

To reduce heat loss and exfiltration, insulate walls and ceilings as thoroughly as possible. Preventing heated air inside a building from exiting reduces the time and necessity for electric heat to operate. Since it usually costs more to produce a unit of heat using just electricity than it costs with most other types of fuels, reducing the amount of time that an electric heating system needs to run substantially minimizes operating costs.

Basement walls or the floor slab of buildings without a basement must be insulated. The floor slab should be insulated according to the chart shown in **Figure 43-24**. Use only insulation approved for below-grade use. Basement walls should have 2″ to 4″ (5 cm to 10 cm) of insulation. Windows should be double-glazed. Wood or plastic window and door frames are preferred, rather than metal. Walls should have 4″ (10 cm) of insulation and ceilings should have 7″ (18 cm).

Thinking Green

Heating Degree-Days

The *International Energy Conservation Code* (*IECC*) specifies both the R-value and the minimum insulation depth from the top of a slab based on an area's heating degree-days. For more information on heating degree-days and the degree-day method of calculating heating costs, see Chapter 46, *Energy Conservation*.

Floor Slab Insulation Depths and R-Values

Heating Degree-Days	Minimum Insulation Depth	R-Value
0–2,499	None required	None required
2,499–4,500	2′	4
4,500–6,000	4′	5
6,000–7,200	4′	6
7,200–8,700	4′	7
8,700–10,000	4′	8
10,000–12,400	4′	9
12,400–14,000	4′	10

US Department of Energy

Figure 43-24. Table of recommended R-values and depths for slab insulation.

11

Copyright Goodheart-Willcox Co., Inc.

During daylight hours, solar heat can be used to supplement electric heat. When possible, open curtains and blinds on east, south, and west windows to allow sunlight to radiate warmth into a building. Although electric heating systems require a well-insulated and tight structure, this design may add to ventilation problems.

43.6.2 Humidity and Ventilation

Relative humidity control in electrically heated buildings is different than in buildings with combustion heating systems. With combustion heating systems, a fairly large quantity of air passes through the furnace and out of the stack. However, electric heating produces no draft. It does not pull excess water vapor out and replace it with drier outside air. With combustion heating systems, makeup air enters the building through a makeup air unit or through leakage around the doors, windows, and cracks in the floor. With most electrically heated structures, building construction permits little infiltration of this nature. Therefore, without the replacement of humid air with dry air, indoor relative humidity may reach uncomfortable or unhealthy levels.

Water vapor formed in the conditioned space of a well-insulated and tightly constructed building cannot easily escape. Relative humidity builds up from cooking, laundry, bathing, pets, occupants, and other sources. Dehumidifying and ventilation equipment may be needed. Depending on the climate zone in which a building is located, a heat recovery ventilator (HRV) or an energy recovery ventilator (ERV) can be used to ventilate a tightly constructed building with minimal heat loss. HRVs and ERVs consist of specially designed heat exchangers that allow outgoing conditioned air to increase the temperature of incoming outdoor air. This allows fresh outdoor air to replace stale indoor air without much heat loss.

43.7 Electric Heating System Service

Electric heating systems provide heat through electric resistance heating. Although electric heating systems do not have combustible fuels or high-pressure fluids, they do require technicians to work safely with high-voltage and high-current circuits. Technicians must take extra precautions to avoid touching components that may be energized and surfaces that may be hot (temperature). Areas of interest include electric heating elements, wiring, and operational controls.

43.7.1 Installing Heating Elements

Electric heating elements must be installed according to electrical codes and manufacturer recommendations. The heating element installation must be carefully checked and inspected. The power circuit providing electrical service to the heating elements must use the appropriate wire gage for the voltage and amperage of the circuit. The heating element circuit must have fuses or circuit breakers and adequate high-limit switches. All safety control devices must be designed for the correct voltage and current. Unit heaters should not be installed close to flammable materials or surfaces.

Safety Note

Heat and Electric Shielding

Electric furnaces must be shielded electrically and heat protected. All metal parts of the furnace must be grounded. Check an electric furnace installation to ensure it is fire safe.

Code Alert

Spacing and Clearance

Section 424.13 of the NEC requires fixed electric space-heating equipment to be installed with required spacing between itself and adjacent combustible material, unless listed for other requirements. Section M1306 of the International Residential Code (IRC) provides required clearances of mechanical appliances from combustible construction. Note that clearance reductions are possible based on manufacturer instructions and Table M1306.2 in the IRC. Other code considerations are working clearances necessary for regular service and maintenance of an appliance.

When replacing a heating element, confirm its part number, size, resistance (in ohms), current capacity (in amps), and voltage (120 V or 240 V). A heating element must always be replaced with a heating element that has an identical kilowatt rating. Substituting heating elements with higher kilowatt ratings or with elements of a different design may result in unsafe operation of a furnace. Heating elements with lower kilowatt ratings will reduce output and may result in unsatisfactory operation of the furnace, **Figure 43-25**.

Copyright Goodheart-Willcox Co., Inc.

DiversiTech Corporation

Figure 43-25. Electric heating element replacement kit with insulators and hardware.

Testing Heating Elements

To test an electric heating element, a technician uses a multimeter to see if the heating element has continuity or is grounded. Refer to furnace wiring diagrams while following this procedure.

1. Shut off all power to the furnace.
2. Remove all wires from the heating element terminals.
3. Using the continuity check function on the multimeter, test from terminal to terminal of the heating element.
4. The multimeter should show continuity. If not, replace the heating element assembly.
5. Next, test from the heating element terminal to ground.
6. There should be no continuity. If there is, the element is grounded and must be replaced.

43.7.2 Installing Baseboard Heating Units

In most cases, a baseboard heating unit should be mounted on a wall. If the unit is built into the wall, dust in the heated air coming from the unit may cause streaking, which means the wall will need frequent cleaning using a vacuum, duster, or rag. A baseboard heating unit's air passages must be clear to prevent poor airflow because the heating element can become overheated if the air passages are blocked.

Typically, each baseboard heating unit or the baseboard units in a single room are controlled by an individual thermostat. This arrangement permits individual room temperature control. Baseboard heating units are easy to install and take up a minimum amount of space. Since there are no moving parts, they are noiseless. Heating units contain a high-limit switch, which is a safety control. A high-limit switch opens the electrical circuit if any part of the heating unit rises above normal temperature. High-limit switches are not always sold separately. If such a high-limit switch fails, replace the baseboard heating unit.

Replacing Baseboard Heating Units

1. Turn off power to the heating unit at the circuit breaker.
2. Remove screws from brackets on the top and sides of the unit.
3. Gently pry the heating unit from the wall. A flat bar may need to be used.
4. Remove the screws from the rear of the wiring box and pull the wiring box cover off.
5. Unscrew wire nuts in the wiring box connecting the ground wire and any additional wires to the wall.
6. Position the new baseboard heating unit next to the wall.
7. Remove screws from the new unit's wiring box.
8. Connect the ground wire and any additional wires to the wall by following the manufacturer's instructions.
9. Screw wire nuts over wiring connections.
10. Secure the new heating unit in place using screws.
11. Turn the circuit breaker on.

43.7.3 Electric Heating System Maintenance and Troubleshooting

Electric heating systems require less maintenance compared to combustion heating systems because they do not produce soot or smoke. However, grilles, ducts, heating elements, and fins should still be cleaned at least once each year. Air passages around the heating elements must be kept clean using brushes and vacuums. Any loose electrical terminals should be tightened, and any corroded terminals should be cleaned. See **Figure 43-26**. Use an ohmmeter or multimeter to check for high-resistance connections.

Copyright Goodheart-Willcox Co., Inc.

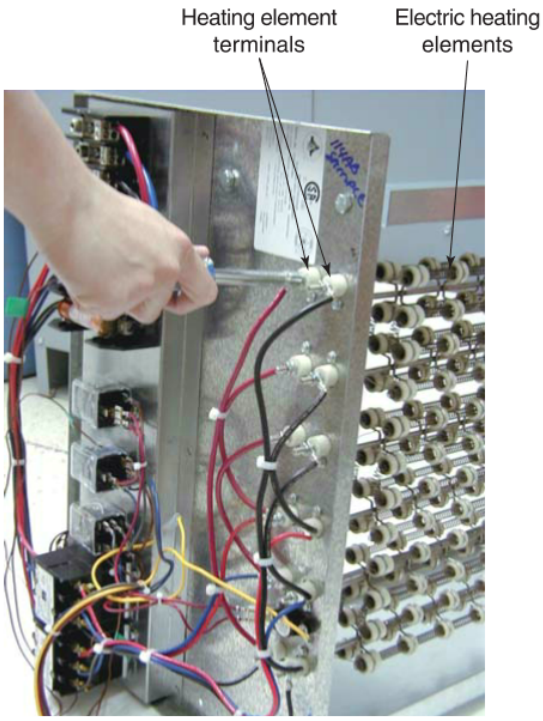

Cadet Manufacturing Co.

Figure 43-26. A technician tightening electric heating element terminal connections.

Safety Note

Flammable Fluid Cleaners

Never use flammable fluids to clean electric heating systems.

The thermostat and sequencer circuits are common causes of electric heating system problems. See **Figure 43-27.** If a circuit does not function, use the following questions to diagnose the cause of the electrical circuit malfunction:

- Is there power to the fuse or circuit breaker box?
- Are the fuses in good condition and are all connections tight?
- Is the thermostat operating? (Check cut-in and cut-out temperatures.)
- Is the high-limit switch operating? (Check cut-in and cut-out temperatures.)
- Are the sequencers in good condition and operating?
- Are the relay or contactor contacts clean and operating?
- Does the electric heating element circuit have continuity?

Electric Heat Troubleshooting

Problem	Possible Cause
Blower turns on and off.	1. If the heating elements heat and cool as the blower runs and stops, the thermostat is short cycling. The anticipator rating may be too high. 2. High-limit switch may be opening and closing. 3. Incorrect low voltage. 4. Motor overload may be opening and closing.
Blower runs, but there is not enough heat.	1. Dirty filters. 2. Voltage too low. 3. Only some heating elements are energized. 4. Open fuse or circuit breaker. 5. Heating element burned out. 6. Sequencer switch not operating. 7. Second stage of two-stage thermostat not operating (second-stage adds to heating capacity).
No power or low voltage.	1. Sequencer switch defective (open). 2. Thermostat open. 3. Low line voltage. 4. Low transformer output voltage.
Motor not operating, but there is proper voltage at motor.	1. Defective motor (open circuit). 2. Defective overload (open circuit). 3. Defective motor capacitor (shorted or open).

Goodheart-Willcox Publisher

Figure 43-27. Common electric heating system problems and possible causes.

Copyright Goodheart-Willcox Co., Inc.

Chapter Review

Summary

- Electric heat is produced by electric current flowing through a resistance element. A technician can calculate an electric heating system's wattage and heat production. For wattage, multiply voltage and amperage. One watt of electrical power equals 3.413 Btu/hr, and one kilowatt equals 3,413 Btu/hr. By dividing the number of Btu per hour (Btu/hr) needed to maintain a building's temperature by 3,413, a technician can calculate how much electrical power in kilowatts is needed to produce this heat.
- There are three basic types of electric heating elements: open wire, open ribbon, and tubular cased wire. Open wire and open ribbon elements are mounted on insulators while tubular cased wire is enclosed in a steel tube to prevent electrical shock.
- Electric heat may be used as a building's primary heating system or as a supplementary heating system. Convection heating systems warm air and move it throughout a conditioned space. Convection systems include electric furnaces, duct heaters, fan heaters, and baseboard heating units.
- Radiant heating primarily heats objects, including occupants, within a conditioned space, instead of heating the air. Direct radiant heat focuses heat from its source directly on objects in its line of sight. Indirect radiant heat warms a large surface, such as a wall or ceiling panel, that radiates heat to other objects. Electric heat can also be used to melt snow and deice walkways and driveways.
- Before energizing heating elements, electric furnaces and duct heaters confirm airflow using a control device, such as a pressure switch or sail switch. Safety control devices such as circuit breakers and fuses are used to protect against excessively high current. Other safety control devices include bimetal discs and fusible links, which protect against overheating by turning off power to the heating elements.
- Sequencers are used to energize electric heating elements one at a time. A sequencer typically has three sets of contacts: one to energize the heating element, one to energize the blower fan, and one to energize the next sequencer in the control circuit. Each individual sequencer energizes its own heating element. Electric heat controls can be wired in different ways for different operational start-up and shut-down sequence.
- While sequencers are often used to energize heating elements, they are not the only control for that purpose. Magnetic contactors and mercury contactors can also be used to energize electric heating elements.
- A baseboard heating unit is controlled by a thermostat. To de-energize such a circuit, it is safest to use a double-pole switch to disconnect both hot legs. Baseboard units often run off 240 V, rather than 120 V. Their power circuits are separate and dedicated to just the heating unit. Any electrical outlets included on a baseboard unit must be on a separate electrical circuit.
- Advantages of electric heating systems over combustion heating systems include increased efficiency, a decreased risk of toxic conditions, and a lower initial cost. Disadvantages include possible humidity problems, the high cost of electricity compared to other fuels, and the risk of working on high-voltage circuits.
- Buildings with electric heating systems must be tightly sealed and heavily insulated to reduce heat loss. However, these design elements may promote high humidity. Heat recovery ventilators (HRVs) and energy recovery ventilators (ERVs) help alleviate humidity problems while still minimizing heat loss.
- When installing heating elements, replacement elements must be the same wattage to prevent system problems, such as overheating and short cycling. Adequate spacing and clearance must be maintained when installing heating units and other appliances. Installations must follow applicable codes.
- Using a multimeter, a technician tests electric heating elements with the power turned off to check for continuity and grounded connections. Heating elements should be kept clean and have unobstructed air passages. Terminals and connections should be tightened and cleaned of any corrosion.

Copyright Goodheart-Willcox Co., Inc.

Review Questions

Answer the following questions using the information in this chapter.

1. Examples of convection electric heating systems include all of the following, *except* _____.
   A. baseboard heating units
   B. electric furnaces
   C. fan heaters
   D. infrared heaters
2. How much electrical power is needed to heat a home that requires 70,000 Btu/hr?
   A. 20.5 kW
   B. 58.3 kW
   C. 291 kW
   D. 2,500 kW
3. The three basic types of electric heating elements include all of the following, *except* _____.
   A. open wire
   B. open ribbon
   C. thermocouples
   D. tubular cased wire
4. Although not all electric heating systems require ductwork, _____ do require ductwork.
   A. baseboard heating units
   B. electric furnaces
   C. fan heaters
   D. infrared heaters
5. A device often added to an electric furnace that can absorb and remove heat during the cooling season is a(n) _____.
   A. accumulator
   B. baseboard unit
   C. evaporator
   D. fan heater
6. A single unit containing an array of electric heating elements installed in a run of ductwork is called a(n) _____.
   A. baseboard heating unit
   B. duct heater
   C. fan heater
   D. infrared heater
7. Although it actually contains electric heating elements and a fan to circulate heated air, a(n) _____ may only look like a wall vent.
   A. baseboard heating unit
   B. duct heater
   C. fan heater
   D. infrared heater
8. What is the current draw of a 2,000 W baseboard heating unit rated at 240 V?
   A. 8.3 mA
   B. 8.3 A
   C. 83 A
   D. 480 A
9. Natural convection is the method of air circulation used by _____.
   A. baseboard heating units
   B. electric furnaces
   C. fan heaters
   D. infrared heaters
10. Which of the following is *not* a reflection angle used by radiant heaters?
    A. 45°
    B. 60°
    C. 90°
    D. 360°
11. In _____ radiant heating systems, heating elements heat a large mass, which then radiates heat to occupants.
    A. continuous
    B. convection
    C. direct
    D. indirect
12. Fixed outdoor electric deicing and snow-melting equipment is considered by the NEC to be a continuous load. This means that maximum current is expected to continue for _____ or more.
    A. 60 minutes
    B. 3 hours
    C. 12 hours
    D. 24 hours
13. All of the following are control devices used to confirm adequate airflow before allowing a duct heater or electric furnace to energize its heating elements, *except* _____.
    A. fan interlock relays
    B. mercury contactor
    C. pressure switches
    D. sail switches
14. A sequencer's _____ produces heat that actuates the sequencer's bimetal element to close multiple sets of contacts.
    A. blower fan
    B. coil
    C. switch
    D. transformer

Copyright Goodheart-Willcox Co., Inc.

15. One example of a high-temperature safety cutoff is a _____.
    A. fusible link
    B. mercury contactor
    C. sail switch
    D. sequencer coil
16. Which of the following should be placed on the same circuit as a 240 V baseboard heating unit?
    A. Appliances.
    B. Electrical outlets.
    C. Lights.
    D. None of the above.
17. Advantages of electric heating systems over combustion heating systems include the following, *except* _____.
    A. 100% energy efficient operation
    B. cost per unit of heat is lower than other fuels
    C. highest temperatures produced are below ignition temperatures (less of a fire hazard)
    D. no flue or chimney necessary for combustion gases
18. Buildings with electric heating systems often use a(n) _____ as a means of ventilation that minimizes heat loss.
    A. sequencer
    B. energy recovery ventilator
    C. insulated floor slab
    D. sail switch
19. It is safest to use a thermostat with a(n) _____ switch to control the 240 V lines to an electric baseboard heating unit.
    A. airflow
    B. double-pole
    C. low-current DIP
    D. single-pole
20. Electric heating system service includes the following tasks, *except* _____.
    A. cleaning corroded terminals
    B. cleaning grilles and ducts
    C. oiling the heating elements
    D. tightening loose terminals

Copyright Goodheart-Willcox Co., Inc.

CHAPTER 44 Solar Power and Thermal Storage

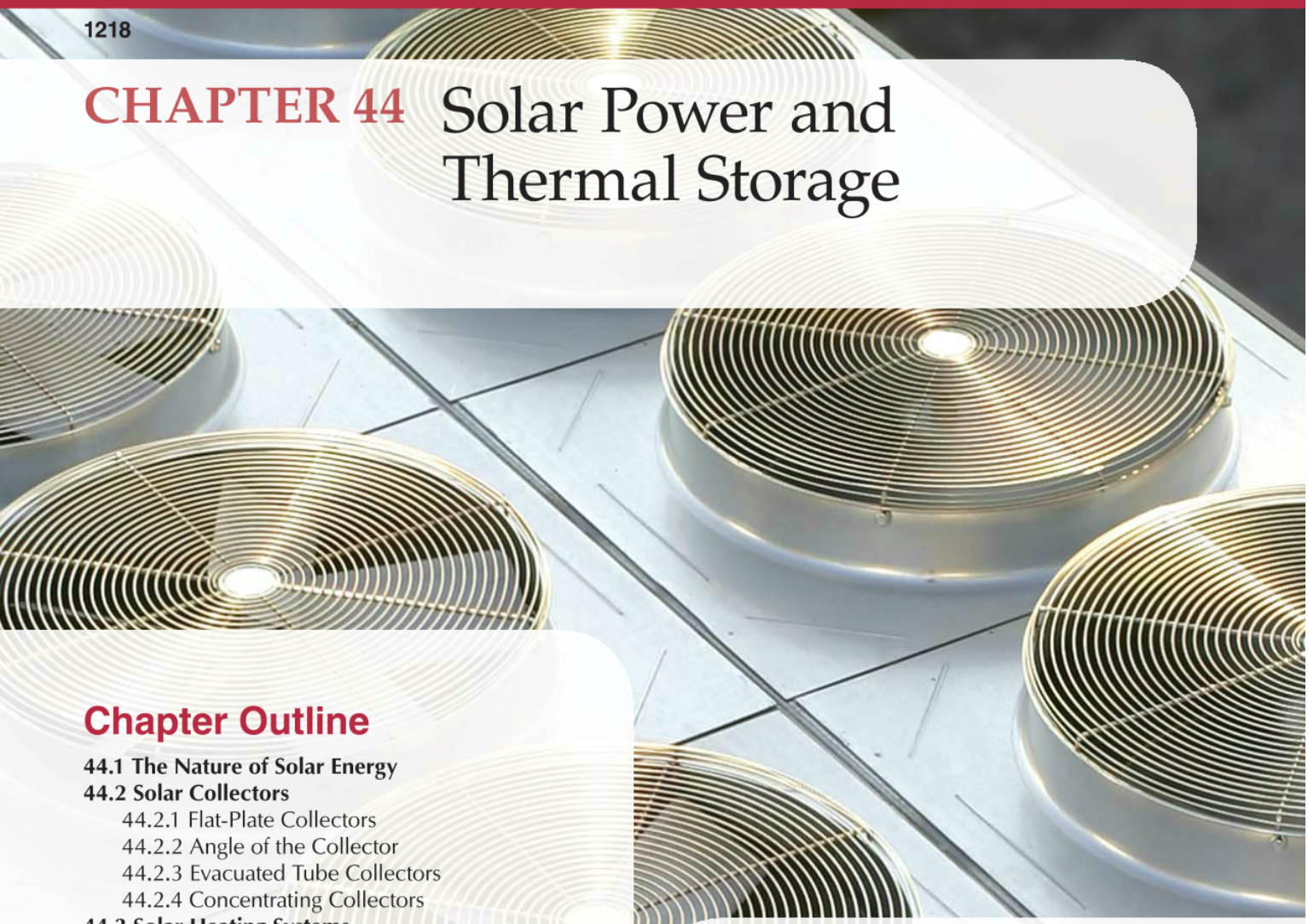

Chapter Outline

44.1 The Nature of Solar Energy
44.2 Solar Collectors
- 44.2.1 Flat-Plate Collectors
- 44.2.2 Angle of the Collector
- 44.2.3 Evacuated Tube Collectors
- 44.2.4 Concentrating Collectors

44.3 Solar Heating Systems
- 44.3.1 Passive Air-Based Solar Heating Systems
- 44.3.2 Passive Liquid-Based Solar Heating Systems
- 44.3.3 Active Liquid-Based Solar Heating Systems

44.4 Applications for Solar Heating Systems
- 44.4.1 Solar Domestic Hot Water (DHW) Systems
- 44.4.2 Solar Heating for Pools, Hot Tubs, and Spas

44.5 Supplementary Heat
- 44.5.1 Electric Heating
- 44.5.2 Oil and Gas Heating
- 44.5.3 Heat Pumps

44.6 Converting Solar Energy to Electricity
- 44.6.1 Solar Cell Construction
- 44.6.2 Solar Cell Applications

44.7 Solar Energy Cooling Systems
- 44.7.1 Solar Absorption Air-Conditioning Systems
- 44.7.2 Solar Mechanical Air-Conditioning Systems

44.8 Thermal Energy Storage (TES) Systems
- 44.8.1 Sensible Thermal Energy Storage
- 44.8.2 Latent Thermal Energy Storage
- 44.8.3 Operation of Thermal Energy Storage Systems
- 44.8.4 Cold Thermal Energy Storage

Learning Objectives

Information in this chapter will enable you to:

- Understand the nature of solar energy.
- Compare flat-plate collectors, evacuated tube collectors, and concentrating collectors.
- Characterize passive, active, and hybrid solar energy systems.
- Describe the operation of air-based and liquid-based solar heating systems.
- Recall applications for solar heating systems.
- Explain how solar heating can be combined with various supplemental heating sources.
- Summarize strategies for using solar power for comfort cooling applications.
- Describe how solar energy is converted to electricity.
- Explain the operating principles of sensible and latent thermal energy storage (TES) systems.

Technical Terms

absorber
active solar energy system
building-integrated solar module
cold thermal energy storage (CTES)
concentrating collector
crystalline solar cell
drainback system
electrodeposition
eutectic salt
evacuated tube collector
flat-plate collector
hybrid solar energy system
net metering
passive solar energy system
phase change material (PCM)
photovoltaic cell
selective surface
solar array
solar cell
solar domestic hot water (DHW) system
solar energy
solar module
thermal energy storage (TES)
thermal mass
thermosiphon effect
thin film solar cells

Review of Key Concepts

Reviewing these concepts from earlier chapters will help you understand new concepts presented in this chapter:

- Heat that brings about a change of state with no change in temperature is called latent heat. Heat that causes a change in the temperature of a substance is called sensible heat. (Chapter 4)
- Semiconductors are substances, such as silicon and germanium, that can be made to conduct electricity under certain conditions. This is done by adding impurities (doping), which causes an excess or shortage of electrons in the semiconductor material. (Chapter 14)
- N-type material has a surplus of electrons. P-type material has holes, or positively charged spaces, that are ready to receive electrons. (Chapter 14)
- A heat pump is a compression refrigeration system that pumps refrigerant through a system in either direction to move heat back and forth between a conditioned space and an unconditioned space, depending on its mode of operation. This allows heat to be absorbed or rejected in either of its two primary heat exchangers. (Chapter 40)

Introduction

Most of the earth's energy sources can be traced back to the sun. The sun radiates energy to space as a result of nuclear fusion. The energy radiating from the sun heats the earth. Energy from the sun heats the atmosphere, creating winds. These winds can be converted to mechanical or electrical energy by wind machines.

Hydroelectric energy generated by water turbines at sites such as Niagara Falls and Hoover Dam is also indirectly related to the sun. Solar energy evaporates surface water, which eventually condenses in the atmosphere, and the resulting rain fills reservoirs. Falling water in pipes from the reservoir water is then used to drive the water turbines in hydroelectric power plants.

Even heat energy produced by burning wood in stoves and fireplaces is derived from solar energy. Solar energy was absorbed by the tree as it grew. Photochemical processes changed the solar energy to fuels. Fossil fuels (coal, oil, and natural gas) are formed by similar processes. The stored energy in the fuel is released as heat and light as the fuel is burned.

All of the above are examples of indirect uses of solar energy. This chapter describes methods of converting solar energy directly to useful heat and electrical energy that can be used for heating or as the power source for cooling systems.

44.1 The Nature of Solar Energy

Solar energy (solar radiation) is electromagnetic energy. The energy in a beam of radiation can be described as a stream of particles called *photons*. Although it is helpful in some cases to think of solar radiation as a stream of particles, it is also helpful to realize that the beam has wave characteristics. An electromagnetic wave, as shown in **Figure 44-1**, has a wavelength and amplitude. The wavelength is the distance between two peaks. The amplitude is the height of the wave. The energy of a wave at any given amplitude depends upon the wavelength. The shorter the wavelength, the greater the energy of the wave.

Light radiation with wavelengths that are greater than 740 nanometers (nm) is called *infrared radiation*. Radiation with wavelengths less than 380 nm is called *ultraviolet radiation*. Light radiation with wavelengths between 380 nm and 740 nm is called *visible light*. Visible light is only a small fraction of the radiant energy present. Our eyes are sensitive to about 25% of the energy in solar radiation.

Pro Tip

Measuring Wavelength

Wavelengths of light may be measured in units of meters (m), millimeters (mm), micrometers (μm) or microns, nanometers (nm), or angstroms (A). A millimeter equals 10^{-3} m. A micrometer equals 10^{-6} m. Micron is another name for micrometer, and is also equal to 10^{-6} m. A nanometer equals 10^{-9} m (one-billionth of a meter). An angstrom equals 10^{-10} m.

Solar energy flux (flow) at different wavelengths as received by the earth is shown in **Figure 44-2**. The area under the curve represents the total energy flow. Outside the atmosphere, energy flow is approximately 1.35 kW/m^2. This is known as the *solar constant*. The atmosphere absorbs and reflects much of the solar energy due to the presence of water vapor and other gases, particularly carbon dioxide and oxygen.

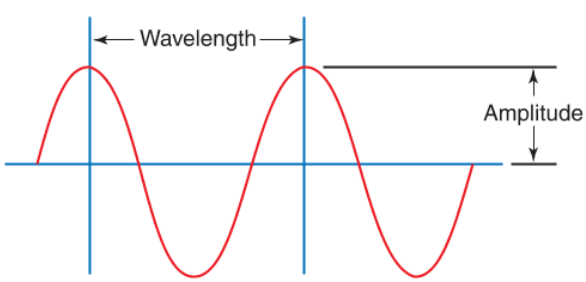

Goodheart-Willcox Publisher

Figure 44-1. Electromagnetic radiation is described as a wave with wavelength and amplitude as shown.

About 45% of the solar radiation that reaches the earth's surface is visible light. From outside the atmosphere to the earth's surface, most ultraviolet radiation is absorbed by ozone. Infrared radiation is absorbed by both water vapor and carbon dioxide.

The radiation given off by a hot object changes with its temperature. At a low temperature, an object such as a stove appears black. This indicates that most of the radiation given off is infrared radiation, outside the visible range. As the object is heated, it gives off more and more radiation in the visible range. It may first appear as a red glow. With further heating, color changes from red to yellow or white. As the object gets hotter, the wavelength at which the most radiation is given off becomes shorter and shorter.

Figure 44-3 shows how radiation given off by an object varies with temperature. At 10,000°F (5500°C), the temperature of the sun, much of the radiation is in the visible wavelength range. The peak of the solar radiation curve occurs at the wavelengths of yellow light. Thus, the sun appears to be yellow. An object at 260°F (130°C) gives off much less radiation, and most of this radiation is in the infrared range. This shift in the distribution of radiation with temperature is critical to solar collector design.

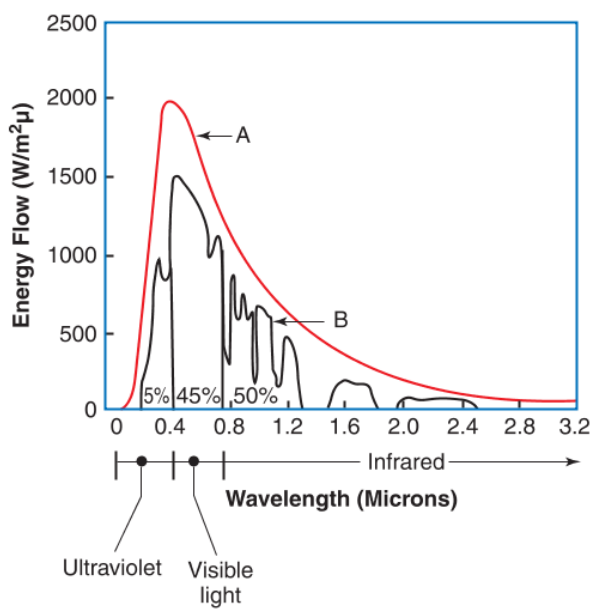

Goodheart-Willcox Publisher

Figure 44-2. Solar radiation at different wavelengths of light. Curve A illustrates the solar radiation outside the atmosphere. Curve B illustrates an approximate radiation flow at the earth's surface, indicating the atmospheric absorption of light. Approximate percentage of energy in the ultraviolet, visible, and infrared radiation regions is also shown.

Copyright Goodheart-Willcox Co., Inc.

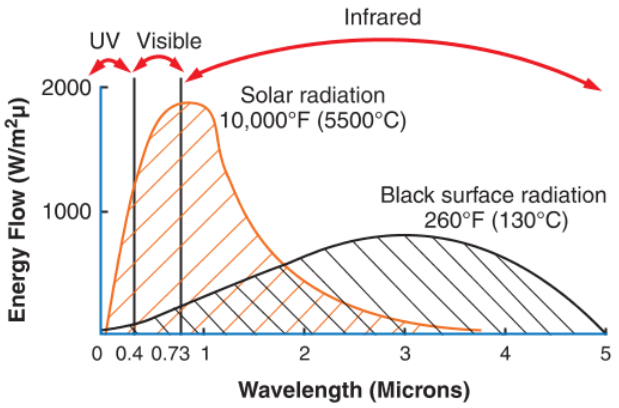

Goodheart-Willcox Publisher

Figure 44-3. Comparison of the energy of radiant rays from the sun with the heat energy of a heated object.

44.2 Solar Collectors

Solar collectors, which absorb heat from the sun's energy, form the basis of all solar energy systems. Most solar collectors in use today are flat-plate collectors. Other commonly used types of solar collectors include evacuated tube collectors and concentrating collectors.

44.2.1 Flat-Plate Collectors

A ***flat-plate collector*** uses a series of flat-plates with an insulated surface to collect solar energy. Rays from the sun are converted to heat upon striking a dark surface. This applies to visible rays, infrared rays, and ultraviolet rays. Heat from this solar radiation can be absorbed, and this is the principle behind flat-plate collectors.

Black Surfaces

The simplest flat-plate collectors use an insulated black surface as the ***absorber***. A surface looks black because it absorbs visible light. Black surfaces absorb infrared and ultraviolet radiation as well. Because black surfaces absorb more radiation from the sun than white or shiny surfaces, they also get much hotter. A black object insulated on the back and placed in the sun absorbs radiant energy and gets very hot. The temperature increases until the radiation from the object equals radiation received from the sun.

The maximum surface temperature that a black object can reach solely due to exposure to sunlight is about 253°F (123°C). At that temperature, heat is radiated away from the object at the same rate that the object is heated by the sun. However, the temperature can be increased by trapping the radiation emitted by the surface. To accomplish this, a glass cover is placed over the black surface. A sketch of a solar collector using this trapping principle is shown in **Figure 44-4**. Collector covers are described later in this chapter.

Selective Surfaces

Special absorber surfaces are sometimes used to increase the temperature of a collector. Such a design is often called a ***selective surface*** or selective absorber. This design acts much like the combined glass plate and absorber surface. It absorbs most of the radiation from the sun that has a wavelength less than a "cutoff wavelength" (around 2 microns). However, it does not absorb longer wavelength radiation.

A surface that absorbs poorly at a given wavelength also emits (gives off) radiation poorly at that wavelength. Because a selective absorber surface emits infrared radiation very poorly, its temperature increases as it is exposed to sunlight.

Many special paints and surfaces are being developed with this characteristic. They selectively absorb most of the sunlight but not infrared rays. Their performance is rated according to their absorption-to-emission ratio. This ratio is the absorptivity of sunlight with wavelength shorter than the cutoff wavelength divided by the absorptivity for longer wavelength radiation. Commercial surface materials are available with an absorption-to-emission ratio of about 20 to 1.

Selective surfaces do not absorb as much energy as black surfaces at wavelengths shorter than the cutoff wavelength. These surfaces may appear gray. However, they do not allow energy at long wavelengths to escape. Most new solar collectors use selective absorber surfaces rather than black surfaces.

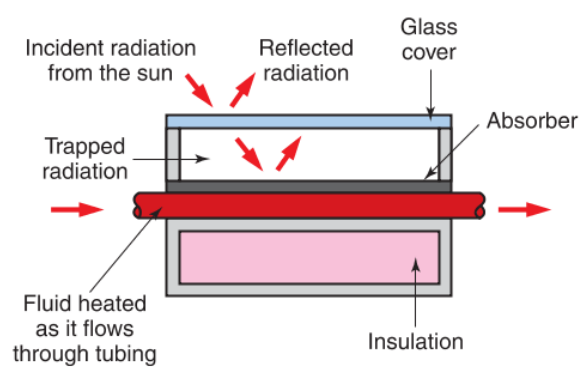

Goodheart-Willcox Publisher

Figure 44-4. The glass cover and the insulation on the back of the collector allow the collector to trap radiation. Most solar radiation passes through the glass because it has a wavelength smaller than two microns. However, most radiation from the absorber is trapped because it has a wavelength greater than two microns.

Copyright Goodheart-Willcox Co., Inc.

Absorber Surface Roughness

The absorber surface should be slightly roughened. This should be somewhat rougher than an eggshell finish. A rough, gray surface is a better absorber than a black, shiny surface. Smooth, shiny surfaces are not used because they would not absorb the radiant energy; they would reflect it away.

The absorber surface is usually applied using an electrodeposition process. In ***electrodeposition***, metallic particles are applied to another metal surface (conduction plate) using an electric current. This process bonds the surface material to the metal conduction plate. Paints are generally not satisfactory for coating an absorber because paint peels and cracks at the high temperature of the collector.

Insulation

If it is not properly insulated, a collector surface will both absorb solar energy and release heat energy. The solar energy coming into the collector is changed to heat. The absorber surface then radiates heat the same as any other warmed surface. To prevent excessive loss of heat, the collector surface is insulated. As described later in the chapter, a collector cover consisting of one or more layers of glass over the front surface may be used to hold in energy as it is converted from solar radiation to heat. However, the back surface of the collector must also be insulated to prevent heat from escaping through the back. About 4″ of conventional insulating material provides enough insulation on the back surface.

Urethane or polyisocyanurate insulation is often used in solar collectors. It has a higher insulation (R) value per inch of thickness than any other practical insulation material and is very easy to handle. However, it must be used in solar collectors with caution. A solar collector may experience stagnation temperatures. This can cause the insulation to outgas, rapidly destroying the effectiveness of the collector. Urethane and similar products may be prohibited from use in collectors in fire hazard areas due to their toxic fume production. When such materials are used in solar collectors, they should be used underneath a blanket of other insulation material, such as binder-free fiberglass, to reduce the hazard of exposure to high temperatures. The addition of fiberglass results in a greater collector thickness than would be needed for urethane insulation alone.

Tubing and Piping

The tubes in a solar collector contain the fluid that collects the heat from the absorber. These tubes are usually made of copper, although aluminum is sometimes used. They are placed directly on top of the absorber, below the collector cover. Another variation is the use of "tube-in-strip" metal instead of tubes. In these systems, the tubes are manufactured into thin strips of copper or aluminum. The strips are placed over the absorber and help absorb and trap heat, while holding the tubes in place within the collector. Larger pipes collect the warmed fluid from the tubing and transport it to other parts of the solar heating system.

Code Alert

Building Penetrations

Section 1402.6 of the International Mechanical Code (IMC) requires roof and wall penetrations used by solar systems to be flashed and sealed to prevent entry of water, rodents, and insects. Section M2301.2.7 of the International Residential Code (IRC) requires these penetrations to be flashed and sealed in accordance with Chapter 9 (Roof Assemblies) of the IRC.

Flat-Plate Collector Covers

A transparent cover is used on most flat-plate collectors. This cover has three basic functions:

- To protect the absorber surface from the weather.
- To allow sunlight to reach the absorber surface.
- To prevent the escape of heat collected by the absorber surface.

Low-iron tempered glass is the most widely used cover material. It provides good light transmission and remains clear indefinitely. It also provides greater transmission of heat than float glass. Typical glass covers are 1/8″ to 1/4″ thick.

The glass allows light with wavelengths less than about 2 microns to pass through. That light is then absorbed by the black surface. At temperatures below 253°F (123°C), the black surface emits most of its energy at wavelengths greater than 2 microns. This radiation is trapped inside the collector. Temperatures of 620°F (327°C) are obtainable in collectors of this type if both mirrors and glass are used.

Glass poses problems in sealing the cover to the other parts of the collector. Glass and metal do not expand at the same rate with temperature change. A flexible sealing material or rubber gasket is necessary at the glass-to-metal joint. This prevents the glass from breaking as the materials expand and contract.

Some covers are formed in a bubble shape rather than a flat shape. The bubble shape provides more structural support and allows the collector to collect more radiation when the sun is near the horizon.

Although some covers are made of clear plastics, plastic is generally considered an inferior cover material compared to glass. Plastic cover materials usually

Copyright Goodheart-Willcox Co., Inc.

soften at high temperatures. Many plastics also become brittle and opaque from absorption of ultraviolet light.

44.2.2 Angle of the Collector

Ideally, a collector surface would be perpendicular to the rays of the sun. However, in most cases, adding a device to keep the collectors properly aimed is prohibitively expensive. Therefore, the position of the collector surface usually remains fixed. The angle of the sun's rays to the horizon varies during the year. It is necessary to set the collector angle to give the best average collecting effect. The sun angle in midwinter is 66.55° minus the site's latitude angle. The sun angle in midsummer is 113.45° minus the site's latitude angle.

For solar home heating, the collector should be positioned to absorb the greatest amount of energy during the heating season. Across the midsection of the United States, the collector should be angled upward about 45° to 55° from the horizontal.

For collectors used during all seasons to provide hot water, the collector angle should be 35° to 45° to the horizontal. For year-round heating, the angle from the horizontal should be the site's latitude angle or up to 10° less. The collector should face south. However, an angle of 30° east or west of south only reduces the energy collected by about 10%.

Naturally, it is important that there be no obstructions between the sun and the collector. Buildings or trees that cast a shadow across the collector surface reduce its effectiveness. The installation site should be thoroughly checked to ensure that it will be free from shadows at all times of the day and all times of the year.

44.2.3 Evacuated Tube Collectors

The most efficient type of solar collector is the ***evacuated tube collector***. This type of collector is similar to a flat-plate collector. However, in an evacuated tube collector, the tubes that contain the fluid are contained in a slightly larger glass tube. The glass tube is sealed and the air between the two tubes is evacuated, creating a vacuum. Heat cannot travel easily through a vacuum, so almost no heat is lost in this type of system. **Figure 44-5** shows a typical evacuated tube collector.

Evacuated tube collectors work well even in very cold temperatures. However, they are more expensive than flat-plate collectors. Also, they are capable of reaching extremely high temperatures. Precautions and safeguards must be present to prevent overheating and system failure.

Sun Spot Solar and Heating, Inc.

Figure 44-5. A typical array of evacuated tube collectors for a high-temperature application. An array of flat solar modules (panels) is mounted above the evacuated tube collectors.

Code Alert

Relief Valve Requirements

Section M2301.2.3 of the International Residential Code (IRC) and Section 1402.5.1 of the International Mechanical Code (IMC) cover requirements of relief valves in thermal solar energy systems. Components containing fluid must be protected with pressure and temperature-relief valves. These relief valves must be located in the system so that a section cannot be isolated from the relief valve.

44.2.4 Concentrating Collectors

A third type of solar collector is the ***concentrating collector***, which can achieve higher temperatures than flat-plate collectors. Although there are several types of concentrating collectors, most of them use one of two technologies. Mirror-type concentrators use reflection of the light off mirrors. The mirrors are either curved or are set at specific angles to reflect the heat into a collector. Lens-type concentrators use a transparent lens to cause refraction, or bending, of light to make the light converge at a common focal point.

Concentrating collectors tend to work well only if they include a system to track the sun throughout the

Copyright Goodheart-Willcox Co., Inc.

day. Also, the mirror or lens must be kept very clean. Any collection of dust or dirt seriously impairs the system's efficiency. For these reasons, concentrating collectors are not as frequently used in the United States as flat-plate collectors.

Caution

Wind Resistance

Because of the large, flat nature of most solar collectors, uplift by wind is a valid safety concern. Before installing any solar energy system, research the wind risks for the proposed location. Determine and take the appropriate steps to install the system securely to exceed the maximum anticipated wind load for the area.

44.3 Solar Heating Systems

In all solar heating systems, solar energy is used to heat a fluid. The fluid absorbs the heat and then transfers it to a specified location. The two most commonly used fluids are air (air-based systems) and water (liquid-based systems). Both air and water are relatively inexpensive to use.

Solar energy systems can be passive or active. ***Passive solar energy systems*** depend on solar radiation striking directly on the area to be heated. A good example of passive solar heating is a greenhouse. The energy flows through the glass into the area where the plants are growing. Large window areas on the south wall of a building help to warm the building during winter. This can also be considered a passive solar heating system. Passive solar energy systems require less energy input than active systems because auxiliary pumps and blowers are not as often needed to circulate heat.

In ***active solar energy systems***, the solar energy is absorbed into a collector. The energy is then transferred from the collector and used or stored. Many new residential solar applications use both passive and active systems. A combination of active and passive solar energy systems is referred to as a ***hybrid solar energy system***. See **Figure 44-6**.

44.3.1 Passive Air-Based Solar Heating Systems

Passive air-based solar heating systems warm the air to heat rooms or buildings directly. The greenhouse mentioned earlier in this chapter is an air-based heating system. Another practical application of passive air-based solar heating is a solarium. The glass walls and roof of the solarium allow thermal energy from the sun to enter. The energy is absorbed by the walls, floors, and even well-chosen furniture that has a high ***thermal mass***. Items with a high thermal mass absorb and store heat more readily than those with a low thermal mass. Wall and floor coverings should be chosen with thermal mass in mind, because this can make a large difference in the efficiency of the system.

Concrete and masonry are examples of materials that have a high thermal mass. These materials are therefore often used in another type of passive air-based system known as Trombe walls. A Trombe wall is a south-facing, 8″ to 16″ thick concrete or masonry wall. The wall is finished with black or another dark color and is separated from the outdoors by a large pane of glass. An air space of 3/4″ to 2″ is left between the wall and the glass to allow the heated air to rise. The heated air then enters the building through an opening or vent at the top of the wall. Another opening at the bottom of the wall allows cool air to enter the space, where it is heated, **Figure 44-7**.

Code Alert

Solar Ducts

Ducts used in solar space heating systems must be constructed and installed in accordance with Chapter 6 (Duct Systems) of the IMC.

Most passive air-based heating systems are inefficient. They can be converted to more efficient active systems by adding blowers, controls, and storage methods to improve air distribution and effectiveness.

Although air-based systems are not as efficient as liquid-based systems, they do have some advantages.

Rob Bryan/Shutterstock.com

Figure 44-6. This home is equipped with a hybrid solar energy system. The large expanse of southward-facing windows provides passive solar heating. The roof overhang keeps the windows shaded during the summer months. A solar collector meets the hot water demands of the home, and a large solar array on the roof provides electricity to the home.

Copyright Goodheart-Willcox Co., Inc.

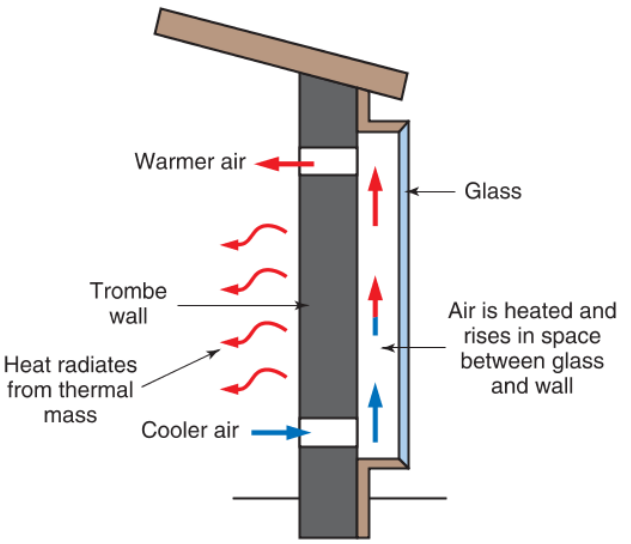

Goodheart-Willcox Publisher

Figure 44-7. Two mechanisms provide heated air in a Trombe wall. The concrete or masonry wall, painted black or a dark color, absorbs heat during the day and releases it at night. In addition, the space between the wall and the glass traps the sun's heat energy. Because hot air rises, this heated air can be channeled back into the building to provide additional heat.

For example, leaks in the system do not pose any danger to the environment or building and will not cause the system to fail. Also, air-based systems are not affected by freezing temperatures. There is no danger of frozen pipes bursting.

Thinking Green

Solar Chimneys

Solar chimneys can be used to provide ventilation and passive heating and cooling. A solar chimney is essentially a chimney with a solar collector on its outer surface. When the sunlight strikes the chimney, it heats the air inside the chimney and causes it to rise. The airflow through the chimney draws in hot, stale air from inside the building, creating a low pressure inside the building. Replacement air is brought in from outside to replace the indoor air vented through the chimney. If the replacement air intake is located outside and connected to the house by a long underground duct, the earth will heat the replacement air in the winter and cool the replacement air in the summer in a manner similar to a ground-loop heat pump. Such an installation is commonly called an *earth tube*.

44.3.2 Passive Liquid-Based Solar Heating Systems

Most liquid-based solar heating systems (especially those in colder climates) use a mixture of water and glycol instead of pure water. The glycol reduces the freezing point of the water so that the water is not as likely to freeze in cold weather.

Code Alert

Freeze Protection

Section 1402.5.3 of the IMC requires that solar energy system components be protected from damage by freezing of heat transfer liquids at the lowest ambient temperatures possible during system operation. Section M2301.2.5 of the IRC echoes this and lists the approved methods of providing freeze protection.

Like air-based systems, liquid-based systems can be either passive or active. In passive systems, the sun heats the water, which then flows to a heat exchanger, where the heat in the water is transferred to the surrounding air. No pump is used in a passive system. Instead, the water flows due to temperature differences in the water itself. Like air and all other fluids, when water is heated, it becomes less dense. Water that is less dense rises above the denser cool water. This creates a natural circulation: Water rises as it heats and falls as it cools. This is known as the ***thermosiphon effect***.

Code Alert

Prohibited Heat Transfer Fluids

Section M2301.4 of the IRC and Section 1403.2 of the IMC prohibit flammable gases and liquids from being used as heat transfer fluids in thermal solar energy systems.

44.3.3 Active Liquid-Based Solar Heating Systems

In an active liquid-based solar heating system, a pump recirculates the liquid within the system. These active systems typically consist of the following components:

- One or more solar collectors.
- Piping to carry a water or antifreeze solution.
- One or more circulating pumps to move the liquid through the system.
- An insulated storage tank or heat exchanger.

Heat from the liquid may be used in one of two ways. It may give up its heat directly to the conditioned space through a radiator. Alternatively, the liquid may become a source of heat for a heat pump. The heat pump is then used to transfer the heat to the desired space.

To protect components some liquid-based heating systems use a ***drainback system***. This system uses

Copyright Goodheart-Willcox Co., Inc.

gravity to drain liquid from the collectors whenever the pump is off. Drainback systems prevent freezing or overheating of the liquid in the collectors. The liquid collects in a storage tank or heat exchanger when the system is not operating.

Code Alert

Vacuum Relief

Section 1402.5.2 of the IMC and Section M2301.2.4 of the IRC require that any component of a solar energy system that may be subjected to a vacuum during operation or shutdown must be designed to withstand vacuum or be equipped with vacuum relief valves.

44.4 Applications for Solar Heating Systems

Solar space heating is less common and less cost-effective than solar water heating. This is partly because there is a demand for hot water in a home year-round. Space heating is typically used only during cold weather and only in regions with cooler climates. The two most common applications for solar heating systems are solar domestic hot water systems and heating systems for pools, hot tubs, and spas. These systems are discussed in the following sections.

44.4.1 Solar Domestic Hot Water (DHW) Systems

Perhaps the most common type of solar heating system is one that supplies hot water for domestic use. A ***solar domestic hot water (DHW) system*** harnesses solar energy to heat water for different tasks, such as dishwashing, showering, and laundry.

The temperature of water supplied from a well is fairly constant throughout the year, ranging from 40°F to 50°F (4°C to 10°C). Water supply from a large municipal water supply system is drawn either from a large reservoir or storage tanks. In some locations, the water temperature may range from 35°F (2°C) in the winter to 80°F (27°C) in the summer. The heat required to supply domestic hot water at 120°F to 140°F (49°C to 60°C) can vary considerably throughout the year, depending upon geographic location.

The two types of solar domestic hot water systems in common use are the one-tank system and the two-tank system. See **Figure 44-8**. The one-tank system consists of a single hot water tank. Liquid is heated in the

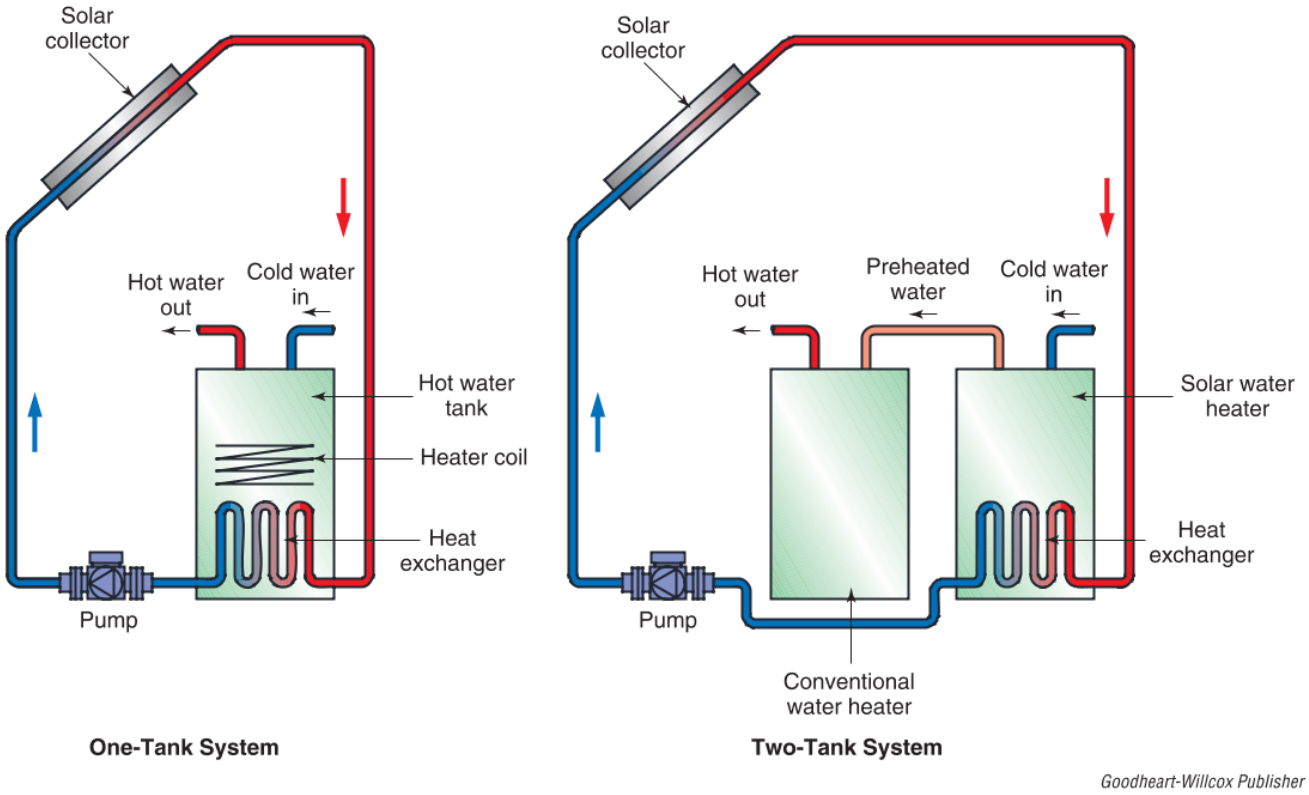

Goodheart-Willcox Publisher

Figure 44-8. One-tank and two-tank solar domestic water heating systems.

Copyright Goodheart-Willcox Co., Inc.

solar collector and circulated through a heat exchanger in the bottom of the hot water tank. An auxiliary heater coil in the top of the tank provides additional heating. It brings the water to the desired temperature. In this system, the hot water tank replaces the conventional water heater.

A two-tank system uses both a solar water heater and a separate conventional water heater. The bottom of the solar water heater contains a heat exchanger. The heat exchanger preheats the water in the tank.

The solution flowing through the solar collector never comes into contact with the water in the tank of the solar water heater. Each fluid flows through completely separate and isolated circuits. This allows an antifreeze solution to be used in the solar collector without fear of contaminating the building's hot water supply. Nevertheless, a food grade glycol is generally used.

Code Alert

Solar Heat Exchangers

Section 1401.3 of the IMC covers heat exchanger requirements for use in solar space heating or water heating systems. Such equipment must be approved for use in these systems and must have adequate protection to safeguard the potability of the water supply and its system. Section 1401.2 requires the potable water supply to be protected against contamination in accordance with the International Plumbing Code (IPC).

After the water in the solar water heater has been preheated, it is circulated to the conventional water heater, where it is brought up to its final temperature. This type of system is easily added to an existing hot water system because the solar water heater is separate from the conventional water heater. A two-tank system is usually 30% to 50% more efficient than a single-tank system.

Solar DHW systems are designed to supply from 40% to 75% of the required hot water for a home. Auxiliary heating supplies the final heat to reach the temperature required, typically 120°F to 140°F (49°C to 60°C).

Pro Tip

Sizing Solar DHW Systems

Domestic hot water use is approximately 25 gallons per day for each person in a family. Solar collector sizes range from 1/2 ft^2 to 2 ft^2 per gallon of hot water required per day, depending on location. In a two-tank system, the solar water heater's storage tank is usually half as large as the storage tank of the conventional water heater.

44.4.2 Solar Heating for Pools, Hot Tubs, and Spas

Heating the water in swimming pools can be used to extend the swimming season in many areas. The solar heating system for a swimming pool can be as simple and inexpensive as a set of black plastic bags placed in the pool. The black bags absorb heat from the sun and transfer it directly to the pool.

In warm climates, solar pool heaters may be of very simple design because no storage is required and no freezing protection is necessary. Also, the collector does not need to withstand water pressure as high as that required for space or domestic water heating systems. These pool heaters require only a low-pressure pump, solar collectors, and piping. The pump circulates pool water from the pool to the solar collectors, where it is heated. The warmed pool water is then piped back to the pool.

In cold climates, a secondary loop and heat exchanger are required. The heating system uses an antifreeze solution. This antifreeze solution is circulated by a pump from the pool heat exchanger to the solar collector. The warmed solution then passes from the collector to the heat exchanger. The solution transfers its heat to the pool water running through the heat exchanger and back to the pool.

The size of a solar collector for a pool heater is approximately half of the pool surface area. This provides good spring and fall heating. The required water temperature for pools is only about 80°F (27°C). Due to this relatively low temperature, the efficiency of solar pool heaters can be as great as 70% to 80%.

Solar heating systems may also be used to heat the water in hot tubs and spas. Some newer systems also include a filter and an inline sterilizer that exposes the water to an intense ultraviolet light source. These items can be helpful in keeping harmful bacteria and mildew out of the warm, damp environment of the hot tub or spa.

Thinking Green

Pool Covers

Covering a pool or hot tub when it is not in use can reduce heat loss, which in turn reduces the amount of energy needed to maintain the proper pool temperature.

44.5 Supplementary Heat

In any location, there may be times when the sun does not supply enough heat energy to the collector. In such cases, supplementary heat must be supplied. Electric resistance heating, a gas or oil burner, or a heat

Copyright Goodheart-Willcox Co., Inc.

pump may be used. As described earlier in this chapter, in two-tank DHW systems, the water is preheated by solar energy. It is then heated by a supplementary heater up to the desired temperature.

44.5.1 Electric Heating

Electric resistance heating is one form of heating used to supplement solar heat. With an air-based heating system, a direct electric resistance radiator may be installed in the air duct. A thermostat is used to control the amount of electric heat needed.

In a liquid-based space heating system, an electric heating element can be installed in an auxiliary tank. It provides supplementary heating when the heat stored in the main tank is exhausted.

In some cases, individual room resistance heating radiators may be installed. However, these tend to be expensive if they are used for more than a few hours.

44.5.2 Oil and Gas Heating

If oil or gas is used for supplementary heat, a separate furnace is installed. A thermostat turns on the burner in the furnace when heat from the solar source is not enough to heat the conditioned space to the desired temperature. In liquid-based systems that use radiators, burners may be used to heat the water in an auxiliary tank. A solar heating system with gas or oil supplementary heat is shown in **Figure 44-9**.

44.5.3 Heat Pumps

In many areas, a heat pump is one of the most efficient methods of supplementing solar heat. The heat pump is well-suited for use with solar heat. A heat pump can also function as an air-conditioning system to remove heat. A heat pump transfers heat like an air conditioner (by compressing and expanding a refrigerant in different parts of the system). It can either add heat to a space or absorb heat from a space. See Chapter 40, *Heat Pumps*, for more information on different heat pump systems.

Thinking Green

Solar and Supplemental Heat Pump Systems

In mild climates with a large solar load, a heat pump with a solar energy collector may be the most efficient way to heat a building.

44.6 Converting Solar Energy to Electricity

Solar energy can be converted directly from radiant energy to electricity. The device most commonly used for this conversion is the ***solar cell*** (also called a ***photovoltaic (PV) cell***). Solar cells are often wired together with other solar cells and then enclosed, forming a ***solar module*** or *solar panel*. The solar modules are then constructed into a ***solar array***. The array can be

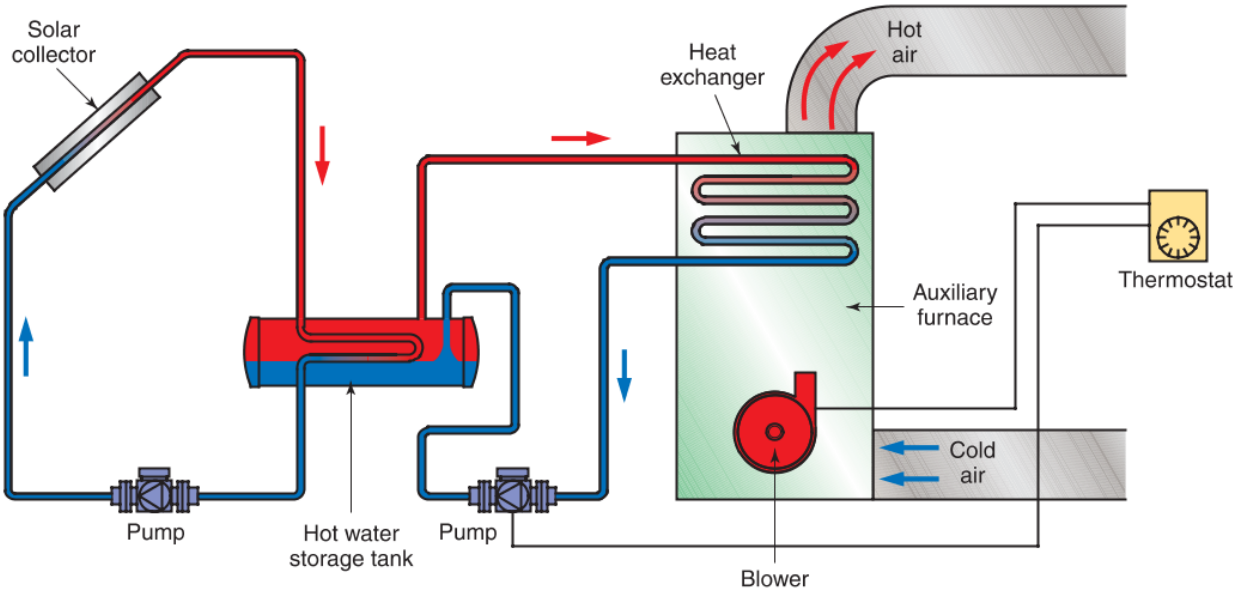

Goodheart-Willcox Publisher

Figure 44-9. A schematic of a closed liquid-based solar heating system used with a forced-air heating application. The heat exchanger is located in the hot air duct of a conventional furnace, which supplies auxiliary heat.

Copyright Goodheart-Willcox Co., Inc.

used to power a dc electrical device or to charge a bank of batteries. If the output of the solar array is passed through an inverter (dc to ac converter), it can then be used to power an ac electrical device.

Code Alert

PV System Definitions

Section 690.2 of the National Electrical Code (NEC) covers commonly used terms and definitions used in solar photovoltaic (PV) systems. Before installing or servicing an HVACR system that incorporates a PV subsystem, become familiar with terminology and their uses in the industry.

Solar modules make good energy sources for remote locations because they are relatively maintenance-free. Small solar electric systems often provide power for remote weather stations, communication stations, and electrochemical corrosion protection systems for bridges and pipelines.

The cost of solar cells and the cost of solar electric system components have decreased due to increased worldwide manufacturing and improved technology. Solar electric systems are now being used to supply power to large commercial buildings or to provide all the power requirements of an energy-efficient home.

Code Alert

Solar Energy Occupational Hazards

Job hazards for installers of solar arrays include electric arc flash burns, thermal burns, falls, and electric shock. OSHA categorizes solar energy installers as electrical power generation, transmission, and distribution workers. Worker safety and training requirements are covered in OSHA's *Electrical Power Generation, Transmission, and Distribution Standard*, 29 CFR 1910.269.

44.6.1 Solar Cell Construction

The components of a typical solar cell are shown in **Figure 44-10**. The principal elements required are N-type semiconductors and P-type semiconductors. An N-type semiconductor has an excess of electrons, or negative charges. When it is struck by photons (light), it releases some of those electrons. A P-type semiconductor has positive charges, sometimes referred to as holes. The term *hole* refers to the space remaining after an electron has been removed from an atom. The holes attract the free electrons released from the N-type semiconductor.

The P-type and N-type semiconductors in most solar cells are mainly silicon. However, pure silicon is not a good conductor of electricity, so impurities are added in a process called doping. The silicon of the N-type semiconductor contains a very small quantity of a material that, compared to silicon, has an *excess* of electrons. Commonly used doping materials, or dopants, include nitrogen, phosphorous, and arsenic. The silicon of the P-type material has a small quantity of material that, compared to silicon, has a *deficit* of electrons. Such materials include aluminum, boron, gallium, and indium.

The contact on the back is also a reflector. Therefore, any light that goes through the cell is passed back through again. In this way, more light can be absorbed. The P-type material must also be translucent. This allows the light to reach the junction between the P-type and N-type materials.

Two primary types of solar cells are manufactured today: crystalline and thin film. ***Crystalline solar cells*** are made from a thin slice of silicon known as a wafer. Typically the slices are 250 microns thick. The manufacturing process begins with a thin slice or wafer of silicon. A small amount of boron dopant is added to the molten silicon during the crystallization process. This makes the material a P-type semiconductor. A small amount of phosphorous is then diffused into the front surface of the wafer, forming a shallow N-type layer in the silicon. The combination of these two surfaces transforms the silicon wafer into a solar cell. Metallic contacts are then deposited on the front

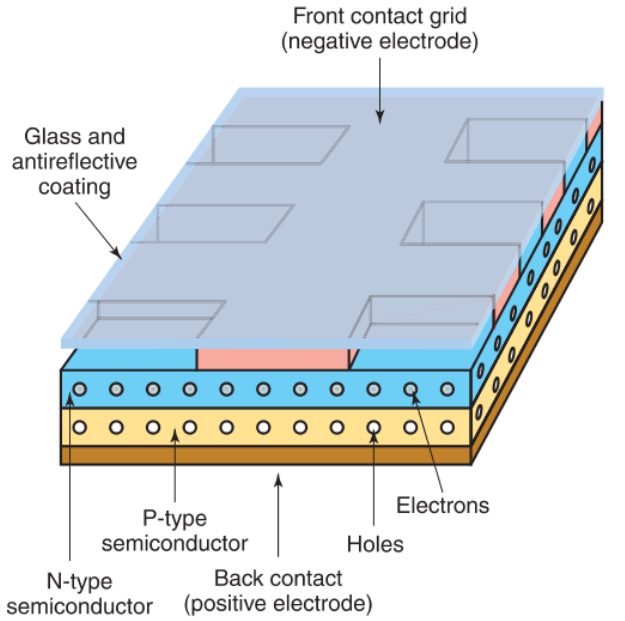

Goodheart-Willcox Publisher

Figure 44-10. Physical components of a solar cell. Note that the diagram is not to scale. The cells are very thin compared to their length and width.

Copyright Goodheart-Willcox Co., Inc.

and back of the cell to allow for external connections. These contacts also improve the flow of current out of the cell. An antireflective coating is also applied to improve the absorption of light by the cell.

Thin film solar cells are constructed by depositing layers of photovoltaic material on a ceramic, stainless steel, or glass substratum. Thin film solar cells are less efficient than crystalline cells, but they cost less to manufacture.

Solar cells may be round, square, or square with beveled corners. Most solar cells measure from 4″ to 6″ along an edge. See **Figure 44-11**. In most systems, they can be connected together in series and parallel to provide the desired voltage and current output. In a solar module, an assembly of interconnected cells is enclosed in weatherproof plastic and sandwiched between a sheet of tempered glass and plastic or steel. This assembly is typically framed with anodized aluminum. Multiple modules can then be connected together to form an array. A weatherproof junction box allows for external circuit connections to the array, **Figure 44-12**.

Solar modules are capable of withstanding severe weather conditions. Most solar modules have a 20-year warranty. However, estimates of actual design life exceed 30 years.

Electrically, solar cells operate similarly to batteries. Crystalline solar cells provide approximately 0.5 volt per cell. Thin film solar cells typically range from 0.5 volt to 1.5 volts per cell. For a specific solar cell material, the *voltage* remains constant under normal operating conditions. However, the *current* produced increases as the sunlight intensity increases. Therefore, the power output increases with increased sun intensity, **Figure 44-13**.

Solar cells can be connected in series, similar to batteries, to obtain higher voltages. The total voltage produced is the sum of the voltages produced by each cell connected in series. The electrical circuit may be as simple as the one shown in **Figure 44-14**. In this drawing, a solar cell is directly connected to a dc motor. The motor output varies with the intensity of the sunlight

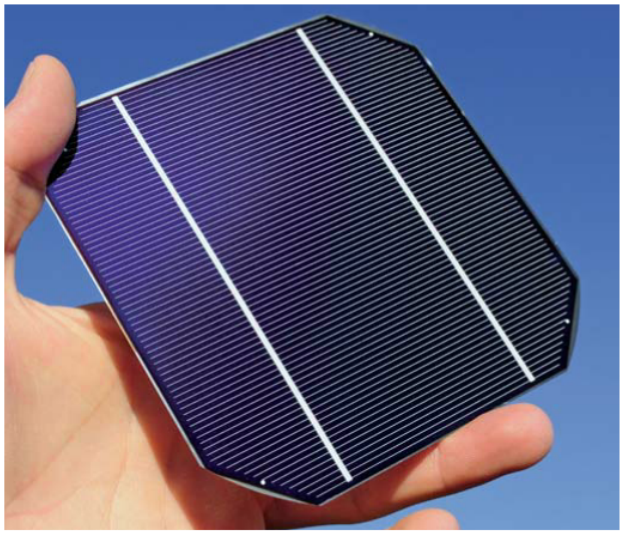

neijila/Shutterstock.com

Figure 44-11. A typical solar cell.

kkays2/Shutterstock.com

Figure 44-12. This close-up view of a solar array shows the individual solar cells combined to form modules (panels) and how those modules are connected to form an array.

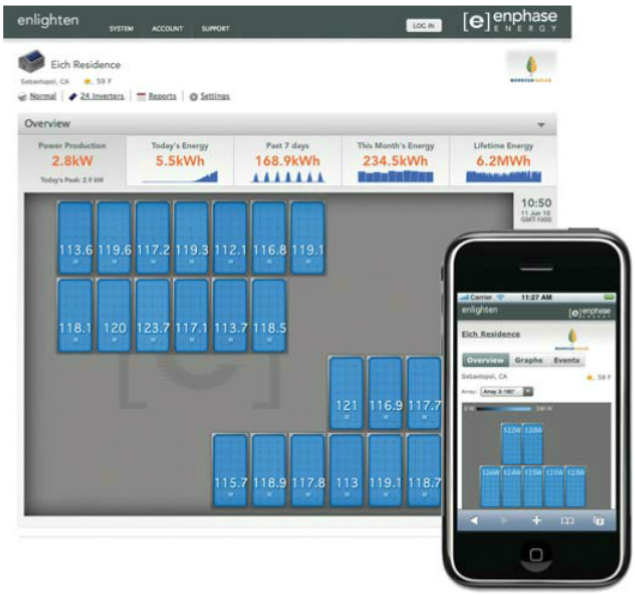

Lennox Industries Inc.

Figure 44-13. Some solar PV system manufacturers provide energy monitoring capabilities that allow building owners to view how much electrical power is being produced by the modules in a solar array.

Copyright Goodheart-Willcox Co., Inc.

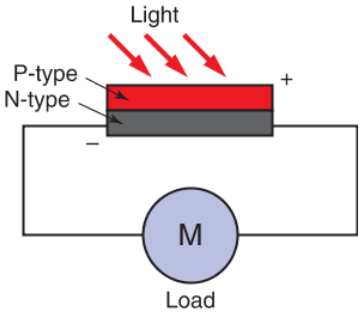

Goodheart-Willcox Publisher

Figure 44-14. A simple solar cell circuit. The amount of power produced depends on sunlight intensity.

striking the solar cell. At night, the motor would not run at all.

44.6.2 Solar Cell Applications

Solar energy systems are used in a wide variety of applications, ranging from small arrays for lighting or sensor systems to large arrays that provide the power needed for homes or large commercial buildings.

Solar arrays are produced in a wide variety of shapes and sizes for various uses. A portable 12-volt array is shown in **Figure 44-15**. This type of array is designed for battery charging or providing power at sites that are not connected to the electrical grid, such as sheds, campgrounds, and construction sites.

Portable Power Sources

In many solar energy systems, a storage battery is installed in the circuit. In bright sunlight, the solar array delivers power directly to the load. Any excess power generated is used to recharge the battery. When there is little or no sunlight, power is drawn from the battery alone. This type of system is often used for roadside signs in remote areas. See **Figure 44-16**.

Solar arrays are used as the primary energy source for many satellites. The use of solar arrays gives the satellite a longer useful life than could be attained with onboard batteries alone. Solar cells are also used in hand calculators, allowing them to operate from interior room lighting or sunlight.

Recently, solar chargers have become available for smartphones, laptops, and other portable electronics. These chargers may be standalone products or may be incorporated into backpacks or attached to bicycles.

Net Metering

The Public Utility Regulatory Policies Act requires public utilities to allow homes with solar energy systems to connect to the public utility grid.

elwynn/Shutterstock.com

Figure 44-15. A portable solar array can be used to charge batteries, provide power to campsites, or power tools in areas where electrical service is unavailable.

Phillip Minnis/Shutterstock.com

Figure 44-16. A solar array constantly recharges battery packs on this portable road sign. This allows the sign to operate for extended periods of time without being connected to the power grid.

12

Copyright Goodheart-Willcox Co., Inc.

In many states, homeowners can sell excess energy they generate back to the utility company. This is known as ***net metering***. These systems do not include storage batteries. Instead, the solar array is connected directly to an inverter to produce alternating current. The inverter is connected to the electrical service panel in a residence or commercial building. In sunny conditions, the solar array helps produce power to help meet the building's demand. If the array produces less power than is needed, the extra power is provided by the grid. If the array produces more power than is needed, the excess power is transmitted through the grid and sold back to the utility company.

This type of solar energy system does not provide power at night, so the building depends entirely on the power grid after the sun goes down. If the utility grid goes down, the solar array is automatically cut off from the grid, so any power produced cannot be sold back to the utility company. Despite these limitations, net metering systems are popular because they are relatively easy to install, efficient, and do not require maintenance. They also do not require the purchase of expensive storage batteries.

Building-Integrated Systems

Building-integrated solar modules appear similar to traditional building materials. In these systems, the solar modules are used as parts of the building materials, not added as a separate feature. Building-integrated solar modules can be planned into new construction or can be used to replace traditional materials in older buildings. Building-integrated systems are now being used in both large commercial buildings and residential applications, **Figure 44-17**.

Code Alert

Roof Collector Requirements

Section M2301.2.2 of the IRC covers requirements for roof-mounted collectors used in thermal solar energy systems. A few requirements include the following: (1) The roof must be constructed to support the load of the collectors. (2) Collectors serving as roof covering (such as building-integrated solar modules) must conform to requirements found in Chapter 9 (Roof Assemblies) of the IRC. (3) Collectors and their supporting structure must be made of noncombustible material or fire-retardant-treated wood equivalent to the type used for roof construction.

44.7 Solar Energy Cooling Systems

Solar energy is primarily used for heating. The systems required to adapt solar energy for cooling can be quite expensive. There are two general ways of incorporating solar energy into a comfort cooling system. The first method is to install solar heat collectors to work in conjunction with an absorption cooling system. The second method is to use solar photovoltaic cells to supplement or entirely power a mechanical air-conditioning system.

CertainTeed Corporation

Figure 44-17. Solar shingles installed on a residential roof. Each solar module is approximately 47″ by 18″ and produces 54 watts. Each module contains 14 solar cells.

44.7.1 Solar Absorption Air-Conditioning Systems

Absorption systems require a heat source. The heat is used to drive the refrigerant out of a solution. See Chapter 34, *Absorption and Evaporative Cooling Systems* for more information about absorption systems. The sun can supply the heat required to operate an absorption system.

Because the sun that heats the building also powers the cooling system, solar cooling systems have the highest energy input when the cooling demands are greatest. As a result, energy storage requirements are minimized and the energy is available when needed most.

The collectors on a solar cooling system are usually concentrating collectors. The mirrors or lenses in these collectors are used to heat the absorber to the proper temperature. The system is shown in **Figure 44-18**.

Experiments are also being made with dynamic solar cooling systems. In these systems, the solar energy is converted to electrical or mechanical energy. This energy is then used to drive a compressor.

Copyright Goodheart-Willcox Co., Inc.

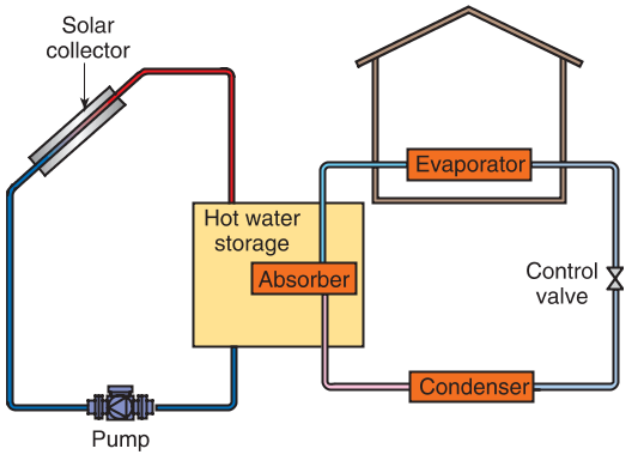

Goodheart-Willcox Publisher

Figure 44-18. Solar energy air conditioning that uses an absorption refrigeration system. Solar energy supplies the heat needed to operate the absorption system.

Concentrating collectors are needed for efficient operation of these systems as well.

44.7.2 Solar Mechanical Air-Conditioning Systems

Mechanical air-conditioning systems generally require a significant amount of electrical power to operate. A system's compressor often runs on 230 Vac or more and draws one of the highest electrical currents in a building. This is confirmed by Watt's law: current × voltage = electrical power. Manufacturers attuned to calls for energy efficiency are incorporating solar photovoltaic (PV) arrays into building electrical systems, **Figure 44-19**.

How a solar PV system is incorporated into the rest of a building's electrical system varies. Some systems are standalone with a bank of batteries and inverters for an off-the-grid system. Other systems connect into the grid and include an inverter but no batteries. Always refer to manufacturer literature to ensure that safe and proper procedures are followed. Refer to local authorities having jurisdiction for building code requirements.

Solar PV arrays may be used as a supplementary source of electrical power or as the sole source of electrical power for air-conditioning systems. Solar-power mechanical air-conditioning systems often require the use of special controls, components, and designs. Solar PV a/c systems for residential and commercial applications are available, **Figure 44-20**.

Code Alert

PV Systems

Section IV of Article 690 of the NEC covers the wiring methods used in solar photovoltaic (PV) systems. Section VIII covers the installation, charge controls, wiring connections, overcurrent protection, and other information regarding storage batteries used in solar photovoltaic (PV) systems. Section VI covers required markings and identifications of equipment and terminals in solar photovoltaic (PV) systems. In PV systems, wiring and devices may be alternating current, direct current, low voltage, or high voltage. Proper marking and identification makes installation and service safer and more organized.

A

B

Lennox Industries Inc.

Figure 44-19. Solar PV residential air-conditioning system. A—System illustration. B—Major system components.

Copyright Goodheart-Willcox Co., Inc.

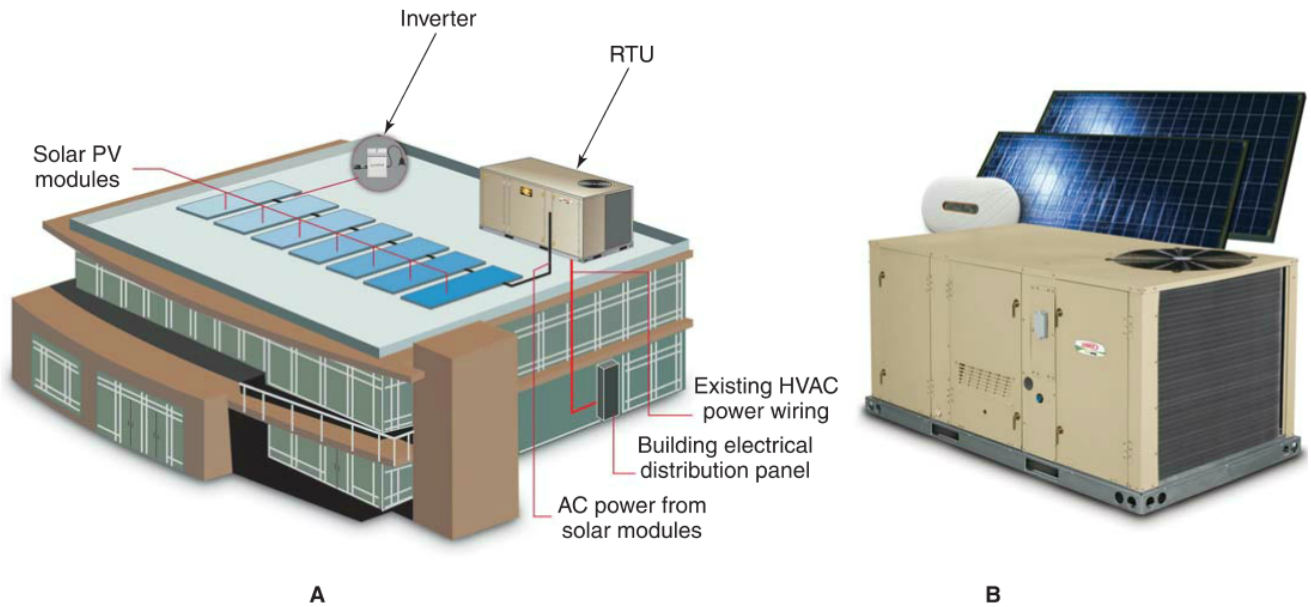

Lennox Industries Inc.

Figure 44-20. Solar PV commercial air-conditioning system. A—System illustration. B—Major system components.

44.8 Thermal Energy Storage (TES) Systems

Thermal energy storage (TES) refers to the temporary storage of heat energy for later use. TES systems store a medium, such as water, that has been heated or cooled during electrical off-peak hours. The medium is then used for heating or cooling during periods of peak demand. By heating or cooling the medium when electrical demand is low and then using the medium to provide heating or cooling when electrical demand is high, TES systems save the consumer money and reduce the demand on the electrical grid. Because TES systems store any excess energy produced for use at a later time, they also reduce fuel consumption and pollution.

Subcategories of TES systems have been developed for different applications, including heating and cooling systems, industrial applications, and as supplements for power generation systems. TES systems can be categorized as sensible TES or latent TES, depending on whether they rely on sensible heat or latent heat as the storage mechanism.

44.8.1 Sensible Thermal Energy Storage

Sensible TES stores energy by changing the temperature of the storage medium. The amount of energy stored in a sensible TES system depends on the initial and final temperature, mass, and specific heat of the storage medium. Sensible TES systems may use water, oil, air, bricks, clay, sand, or soil as the storage medium.

Code Alert

Air Filtration

Section 1402.7 of the IMC provides filtration requirements for forced air coming from a heat storage system that has traveled through rock or dust-producing materials.

Since the specific heat of water is nearly double that of soil, it is capable of storing twice the energy that could be stored in soil at the same temperature. Because of its higher energy storage density, water is typically used for building heating and cooling applications.

Sensible TES systems require a storage medium, an insulated container, and one or more heat exchangers. The medium for TES should be inexpensive and have a relatively high specific heat to maximize its ability to store heat. The storage container holds the medium and must be insulated to prevent the loss of thermal energy. The heat exchanger allows heat to be put into the system from a heat source, such as a solar collector. It also allows heat to be transferred out of the system to the conditioned space as needed.

In a sensible TES system, the storage medium does not change its form (physical phase) during the course of the heat storage/withdrawal cycle. The process simply raises and lowers the temperature of the storage medium. It only deals with sensible heat, no latent heat.

Copyright Goodheart-Willcox Co., Inc.

A domestic solar water heater is an example of a basic sensible TES application. The water is heated during the day while the sun is shining, and then the heat is stored in a tank until needed. A more complex example is a large commercial TES system that stores hot water while the sun is shining, then uses the water to provide space heating in the winter and indirectly for cooling during the summer, **Figure 44-21**.

44.8.2 Latent Thermal Energy Storage

Latent heat is the heat that is either absorbed or released when a substance changes from one phase (solid, liquid, or gas) to another. An example of latent heat is the heat added to liquid water at 212°F (100°C) to turn it into steam at 212°F (100°C). During the phase change, the temperature of the substance does not change. However, the substance is capable of absorbing or releasing large amounts of heat energy during the phase change.

Latent TES systems consist of a storage medium, a storage container, and one or more heat exchangers. The storage medium used in a latent TES system must be able to change phase states from solid to liquid or from liquid to solid within the range of operating temperatures and pressures. Such media are known as ***phase change materials (PCMs)***. Both organic and inorganic materials are suitable for latent TES systems. Of the organic options, paraffin waxes are the most commonly used media. Paraffin is popular because it remains stable, even after numerous storage and withdrawal cycles. It is also chemically inert, nontoxic, and available at low cost. Inorganic options include various salt solutions and metals.

Latent TES systems have a higher storage density (are capable of storing more energy in the same volume) than sensible TES systems. They also release heat at a constant temperature, something that is not possible with sensible TES systems.

Caleffi North America, Inc.

Figure 44-21. Solar collectors for a commercial hot water system.

44.8.3 Operation of Thermal Energy Storage Systems

The basic principles of operation are the same for both sensible and latent TES systems. Heat from a source, such as a solar collector, is transferred to the storage medium through a heat exchanger. This causes the medium to change temperature. In a sensible TES system, the temperature increase of the medium is the sole means of energy storage. In a latent system, the temperature increase ends when the medium reaches its melting point. Any additional heat helps to melt the storage medium, but it will not increase the storage medium's temperature until all of it has melted.

When needed, the heat in the storage medium is extracted through a heat exchanger. In a sensible TES system, this causes an immediate drop in the temperature of the storage medium. In a latent TES system, the storage medium begins to solidify as heat is extracted, but the temperature of the medium remains the same. The temperature of the medium in a latent TES will drop only after all of the latent heat stored has been extracted.

The size and type of TES installed depends on the application. TES systems can be designed to store heat for moment-to-moment demand, daily demand cycles, or even seasonal demand cycles.

44.8.4 Cold Thermal Energy Storage

TES can also be used for cooling by removing heat from the storage medium rather than adding heat. Then, when additional cooling is needed, the precooled storage medium in the tank can absorb heat through the heat exchanger. ***Cold thermal energy storage (CTES)*** systems, sometimes referred to as cool storage, cool a storage medium at night, when energy demands are low. The precooled medium is then used to provide cooling during times of peak electrical demand, such as midday. Because electricity is typically more expensive during periods of peak demand, precooling the medium at night and using it during the day helps to lower energy costs. A CTES system incorporated into a chiller system is shown in **Figure 44-22**.

Pro Tip

Terminology

A CTES system may also be referred to as an STL system. STL is short for *stockage latent*, which means "latent heat storage."

Copyright Goodheart-Willcox Co., Inc.

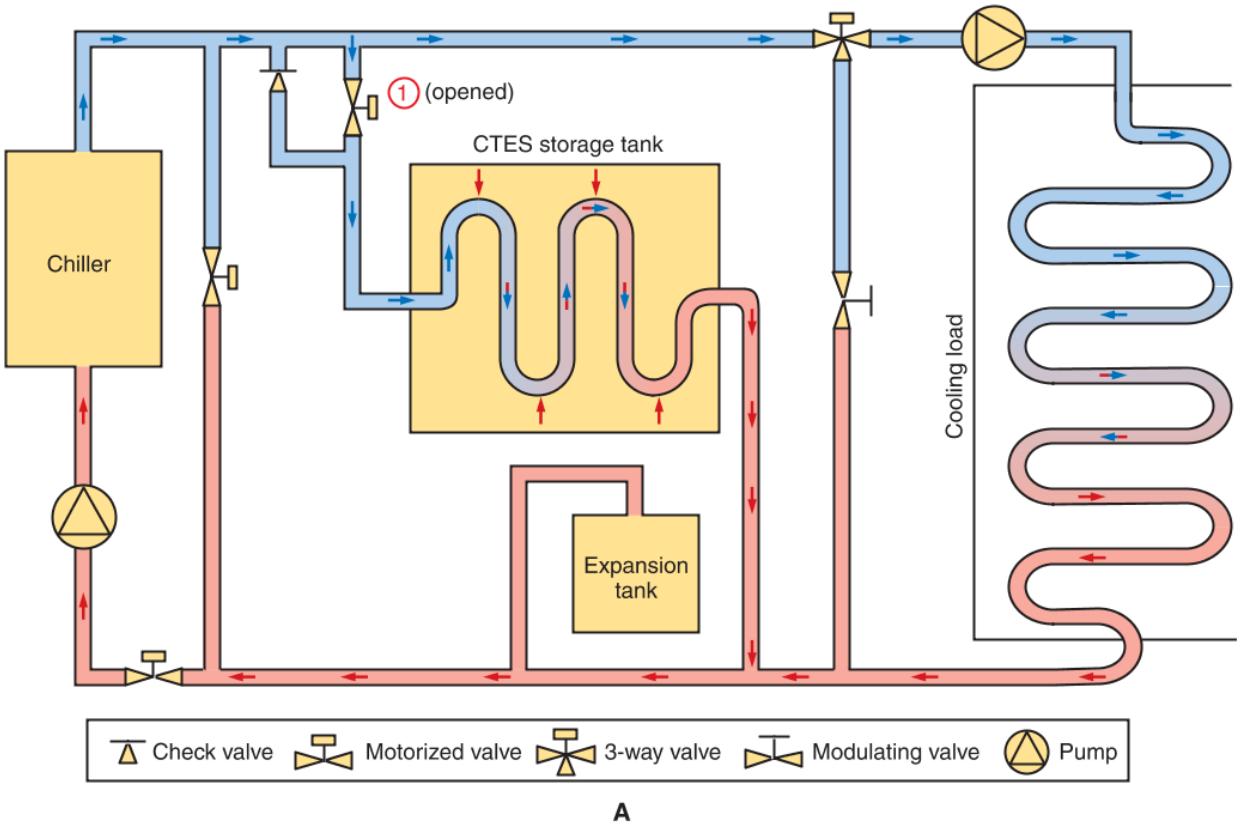

Goodheart-Willcox Publisher

Figure 44-22. A typical CTES system. A—During periods of low cooling demand, Valve 1 is opened, diverting some of the chilled water into the CTES storage tank. The chilled water flowing through the CTES storage tank heat exchanger absorbs heat from the CTES storage medium, cooling it. B—During periods of high cooling demand, Valve 1 is closed. Some of the warmed return water from the cooling load heat exchanger is diverted through the CTES storage tank heat exchanger. The precooled medium in the storage tank absorbs heat from the return water, chilling it. The chilled water is then sent back to cooling load heat exchanger. (*Continued*)

CTES systems may be cost-effective in a variety of situations. For example, a CTES system may be a good option in cases where the maximum cooling load is far greater than the normal cooling load. The CTES system can provide the extra cooling capacity needed during periods of peak cooling demand. CTES systems may also be cost-effective in regions where the utility companies offer demand response programs or charge a higher time of use rate for electricity during peak demand periods. Many utilities levy a demand charge that works like a speedometer on a car, charging customers based on the month's maximum energy use. In certain areas, the demand charge is ratcheted for a year so that customers are charged at the highest annual energy use for a period of one year.

CTES systems are also an environmentally friendly solution. First, a CTES system utilizes energy that is more efficiently produced at nighttime. During low-demand, off-peak periods, 10% to 30% less energy is needed to deliver power, because off-peak power plants (known as baseload plants) are that much more efficient. Secondly, it is more efficient to create cooling in the cool of the night than in the heat of the day. Transmission line losses are highest when power demand is highest. Losses of 5% to 7% are normal and can go as high as 14% on hot days.

Lastly, CTES systems help thrust renewables into the mainstream. Most energy used today consists of fossil fuels, which are a form of stored energy. Renewables are rapidly replacing fossil fuels, but they lack the element of storage. In order to continue to add renewables to the grid, storage must be added. For these reasons, CTES systems may be a good solution for green buildings, such as zero energy and LEED-certified projects in either new construction or retrofits. CTES is commonly considered when planning building expansions, when replacing a chiller or chiller plant, and when auxiliary cooling or backup cooling is needed.

Copyright Goodheart-Willcox Co., Inc.

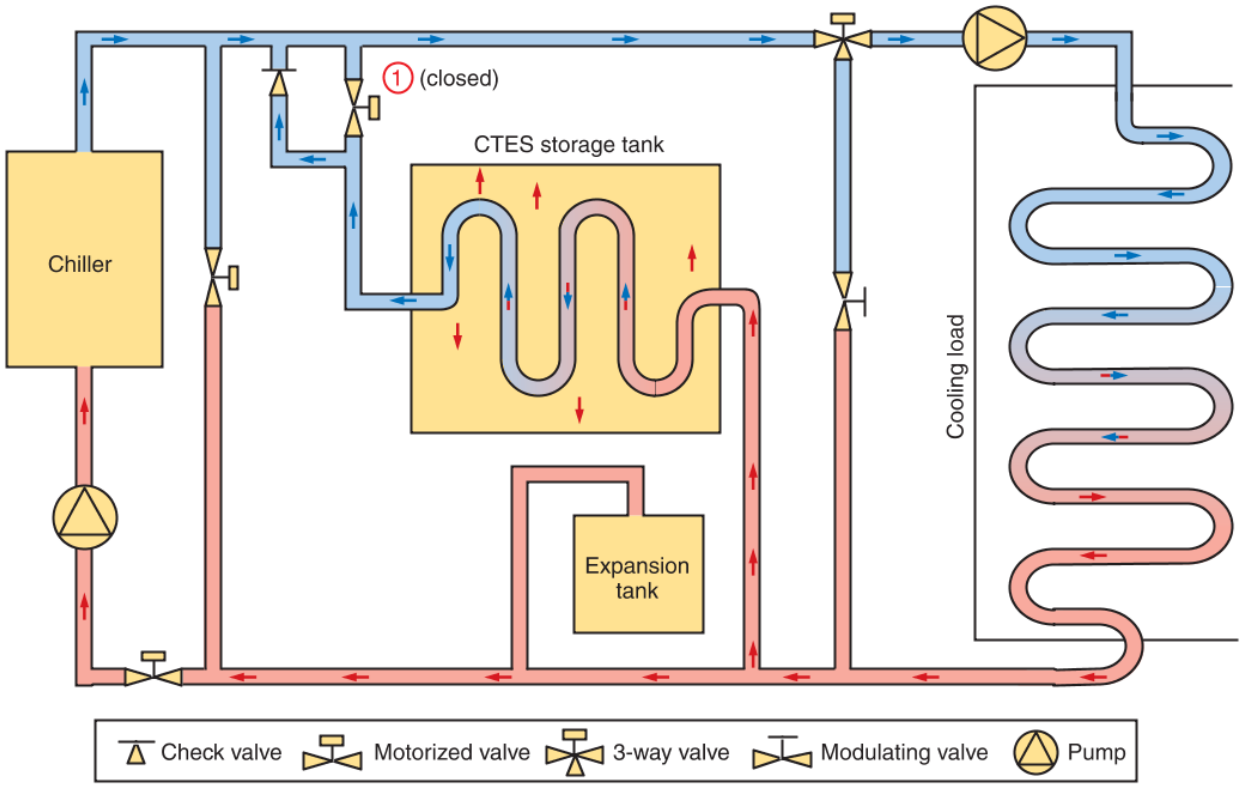

B

Goodheart-Willcox Publisher

Figure 44-22. Continued.

Full-Storage CTES

Full-storage CTES systems generate all of the cooling capacity for a building during off-peak hours. The system operates at full capacity during all off-peak hours. This includes both charging the system and generating all of the cooling capacity that will be needed during the peak demand periods. In other words, the chiller precools the CTES storage medium during periods of the day when energy rates are less expensive, and it shuts off when energy rates are more expensive. During those peak times, all of the cooling is provided by the precooled storage medium, **Figure 44-23**.

Partial-Storage CTES

In partial-storage CTES systems, the chiller precools the CTES storage media when cooling demands are low. However, unlike with a full-storage CTES system, the chiller continues to operate during periods of peak demand. If the chiller does not provide adequate cooling to meet demand during these peak periods, the precooled storage medium in the CTES makes up the difference. Alternatively, the chiller and energy storage can work together at the same time to cool building occupants.

Because the CTES system can provide reserve cooling capacity when needed, the size of the chiller can be smaller than would be possible if the cooling were provided by the chiller alone. Because a smaller chiller can be installed, the initial costs of a partial-storage CTES system are lower than the initial costs of a full-storage CTES system. For this reason, most CTES systems are partial-storage systems.

CTES Media

CTES storage media usually consist of chilled water, ice, or eutectic salts. The exact type of storage medium used depends on the type of application and the operating temperature of the system. Ice and eutectic salts are phase change materials.

Chilled Water

CTES systems that use water as the storage medium require larger tanks than are used with other storage media. However, these systems use less energy at the building site because less energy is needed to cool water than to freeze water. CTES systems that use

Copyright Goodheart-Willcox Co., Inc.

CALMAC Manufacturing Corporation

Figure 44-23. A full-storage CTES for a large cooling system could use a large tank farm as shown for cold thermal storage.

water as the storage medium typically operate at temperatures of 39.2°F (4°C). Chilled water may be mixed with glycol or another substance for a solution for a given application, **Figure 44-24**.

Water is best used in combination with a chiller system with a 2000-ton or greater capacity. Water is a popular storage medium because it is readily available and nontoxic. It is suitable for use in heating and

CALMAC Manufacturing Corporation

Figure 44-24. A chilled glycol installation with thermal storage tanks.

Copyright Goodheart-Willcox Co., Inc.

cooling applications that have operating temperature ranges between 41°F (5°C) and 113°F (45°C). Because it can be used in both heating and cooling applications, it can be used economically year-round.

Ice

Ice CTES systems have a number of advantages over water CTES systems. First, the tanks used in ice CTES systems are modular and can be smaller than those in a comparable water CTES system. Ice CTES systems can also provide increased cooling capacity. Ice systems can be used in lower-temperature applications.

Since an ice CTES has greater cooling capacity, smaller fans and ducts can be used to provide cool air to the conditioned space. Also, the cooler temperatures condense more moisture from the air, resulting in less humid air.

Because energy is being stored below the freezing point of water, the equipment used to precool the ice must operate at temperatures below the normal operating temperature range of air-conditioning equipment.

Special equipment is available that has been designed specifically for precooling the storage media in an ice CTES. As an alternative, a standard chiller can be modified to produce the low temperatures required.

Eutectic Salts

Eutectic salts consist of a combination of inorganic salts, water, and various elements formulated to freeze at a desired temperature. In a eutectic salt CTES system, a round plastic or stainless steel shell, called a nodule, is filled with a eutectic salt solution. See **Figure 44-25**. A small air gap is left to allow for expansion of the material. The nodule is then plugged and sealed. An insulated tank is filled with the nodules. The tank also contains two water pipes with openings that allow water to flow into the tank. The water passes through the small gaps around the nodules, transferring heat to or from the nodules. The spherical shape of the nodules provides a large surface area for heat transfer.

The eutectic salt solution most frequently used in such nodules freezes at 47°F (8.3°C). This setup provides both the benefit of latent heat storage (eutectic salt nodules) and the benefit of a liquid heat transfer medium (water). Eutectic salt systems are no longer as widely used as they once were.

Mechanical HVAC CTES Systems

Chiller systems are not the only HVAC systems to utilize CTES. Some mechanical HVAC systems also incorporate ice storage for energy savings. A commercial mechanical air-conditioning system can include an add-on CTES system. The CTES system operates in freeze mode during the cool of the night to freeze an ice bank that can later be accessed during peak hours of daytime use. It uses its own evaporator, compressor, and condenser to absorb and reject heat for freezing the ice bank. During peak hours,

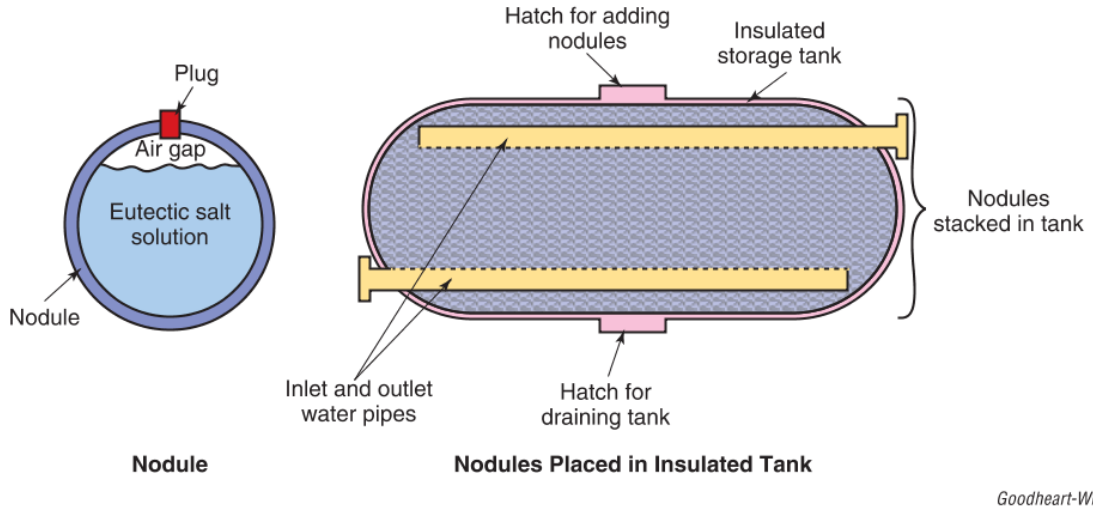

Goodheart-Willcox Publisher

Figure 44-25. A CTES system that uses eutectic salt solutions in nodules as the storage medium. Each nodule is filled with a eutectic salt solution. The nodules are placed in an insulated tank.

Copyright Goodheart-Willcox Co., Inc.

the CTES ice storage system only runs a low-power pump to circulate refrigerant through the ice bank and then through a cooling coil installed adjacent to the RTU HVAC system's evaporator, **Figure 44-26**.

Adding a separate cooling coil to a rooftop unit (RTU) allows the refrigerant circuits of the HVAC system and the ice storage system to remain separate and isolated. This simplifies the installation process considerably, as the RTU's refrigerant circuit does not need to be recovered, evacuated, and recharged, **Figure 44-27**.

The ice storage system's cooling coil provides peak-hour cooling, allowing the HVAC system's compressor and evaporator to sit idle during this time. Low-cost cooling is provided by the RTU's blower circulating air across the cold storage coil for cooling. Since only a low-power pump is being used to circulate the refrigerant, much less electrical power is used for this cooling mode.

CTES systems used with mechanical HVAC systems are generally partial-storage systems for use during peak hours. Regular air-conditioning operation resumes once the ice bank melts and temperature controls signal to the system, **Figure 44-28**.

Ice Energy, Inc.

Figure 44-27. This mechanical rooftop unit air conditioner has a CTES system's cold storage coil installed adjacent to the evaporator. The RTU maintains its same refrigerant charge, and the CTES system has its own charge in a separate and isolated refrigerant circuit.

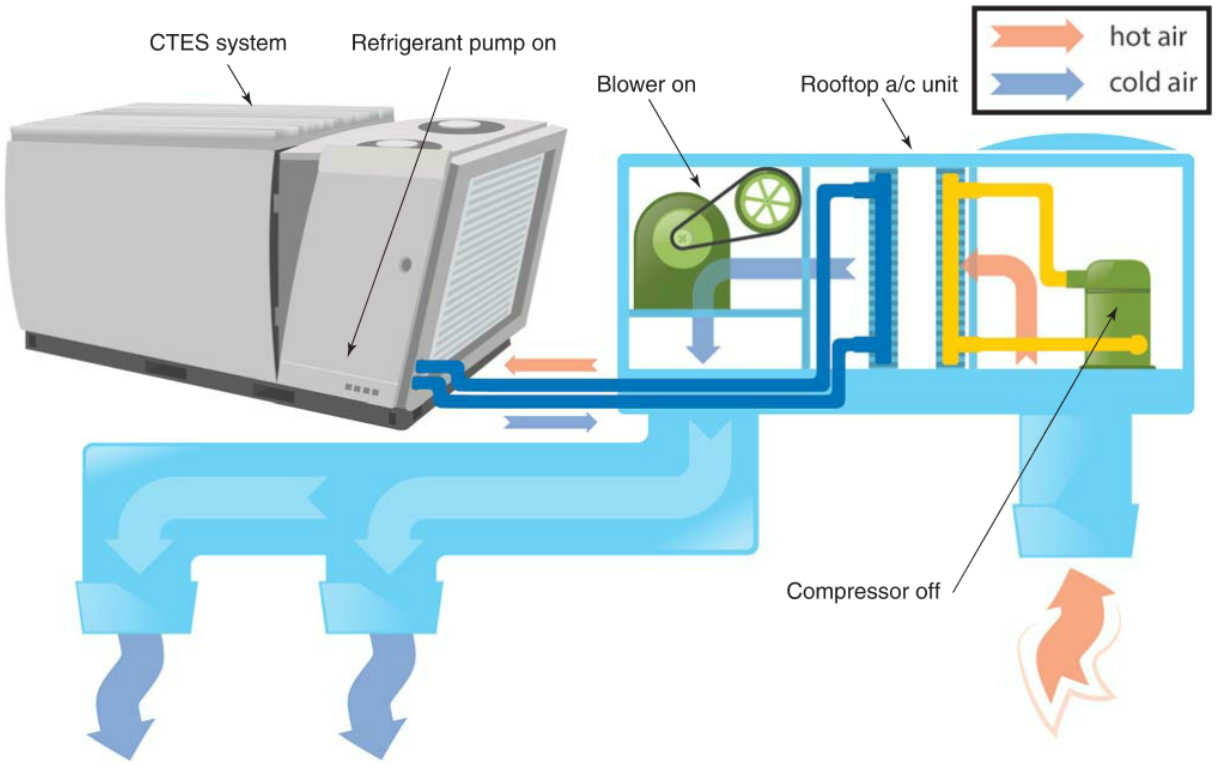

Ice Energy, Inc.

Figure 44-26. A mechanical rooftop unit (RTU) air conditioner with an ice storage CTES system.

Copyright Goodheart-Willcox Co., Inc.

Ice Energy, Inc.

Figure 44-28. An ice storage CTES system used with a commercial air-conditioning rooftop unit (RTU).

Copyright Goodheart-Willcox Co., Inc.

Chapter Review

Summary

- Solar radiation is electromagnetic energy that can be described as a stream of photons or as electromagnetic waves of various wavelengths. As a wavelength gets smaller, the energy level of the radiation increases.
- The three primary types of solar collectors are flat-plate collectors, evacuated tube collectors, and concentrating collectors. Of these, flat-plate collectors are the most common.
- Passive solar energy systems use solar radiation directly to provide heat. Active solar energy systems absorb heat energy into a collector, then redistribute or store it. Hybrid solar energy systems are a combination of passive and active solar energy systems.
- Solar heating systems use solar energy to heat a fluid (usually air, water, or an antifreeze solution) and then use the fluid to transfer the heat to a different location. Both air-based systems and liquid-based systems can be either passive or active.
- The most common application for a solar heating system is a domestic hot water system. Other common applications include heating pools and hot tubs.
- Solar heating can be supplemented with electric resistance heating, gas-fired or oil-fired heating, or a heat pump.
- Solar energy can be converted directly from radiant energy to electricity using solar photovoltaic (PV) cells. Solar cells can be combined to create solar modules, and solar modules are combined to create solar arrays. The direct current produced by solar modules can be stored in a bank of batteries, or it can be fed through an inverter to produce an ac voltage for use in a building or on the electrical grid.
- Solar energy can be adapted to cooling applications in two ways. The heat of solar radiation can be used as a heat source for an absorption cooling system. The electricity produced by photovoltaic (PV) modules can be used to power a mechanical air-conditioning system.
- Sensible TES systems store energy solely by changing the temperature of the storage medium. Latent TES systems store energy both by changing the temperature of the storage medium and by changing its phase.
- Cold thermal energy storage systems can reduce cooling costs by storing a cold thermal mass for use during peak hours. This can be incorporated into both chiller systems and traditional direct-expansion air-conditioning systems.

Review Questions

Answer the following questions using the information in this chapter.

1. Which of the following surfaces would be most effective for the absorber in a solar collector?
   A. Rough black surface.
   B. Rough white surface.
   C. Shiny black surface.
   D. Shiny white surface.
2. Which of the following is *not* a basic function of a flat-plate collector cover?
   A. To prevent the escape of heat collected by the absorber surface.
   B. To protect the absorber surface from the weather.
   C. To allow sunlight to reach the absorber surface.
   D. To position the absorber perpendicular to the sun.
3. The tubes in an evacuated tube collector lose almost no heat because heat cannot travel easily through _____.
   A. air
   B. compressed air
   C. a vacuum
   D. a water/glycol mixture
4. Which of the following is an example of a passive solar energy system?
   A. A closed liquid-based system supplemented by a heat pump.
   B. A forced-air solar heating system.
   C. A greenhouse addition on a home.
   D. A pumped water-based solar heating system.
5. A(n) _____ solar heating system may use a thick concrete wall to store thermal energy for heating at a later time.
   A. active liquid-based
   B. passive air-based
   C. passive liquid-based
   D. None of the above.

Copyright Goodheart-Willcox Co., Inc.

6. Liquid-based systems in cold climates often use a mixture of water and _____ instead of pure water to reduce the freezing point of the liquid.
   A. butane
   B. glycol
   C. R-12
   D. paraffin
7. An example of the thermosiphon effect is _____.
   A. a concrete wall becoming warmer when exposed to energy from the sun
   B. evacuated tube collectors losing less heat than flat-plate collectors
   C. using gravity to drain solar collectors when the temperature is below freezing
   D. water rising as it heats and falling as it cools in a passive heating system
8. Which of the following statements regarding solar domestic hot water (DHW) systems is *not* true?
   A. A one-tank solar DHW system replaces a conventional water heater but still uses an auxiliary heating coil.
   B. A two-tank solar DHW system preheats water but still relies on a conventional water heater.
   C. Solar DHW systems are more widely used and more cost-effective than solar space heating systems.
   D. Solar DHW systems pump potable domestic water through solar collectors for direct heating.
9. Which of the following would *not* be used to provide supplementary heat for a liquid-based solar heating system?
   A. A gas-fired burner.
   B. A heat pump.
   C. An in-tank electric resistance heating element.
   D. An object with high thermal mass.
10. In a solar cell, the P-type semiconductor has an excess of positive charges, called _____.
   A. electrons
   B. holes
   C. neutrons
   D. positrons
11. Which of the following statements about net metering solar energy systems is *not* true?
   A. Excess power generated by the net metering system may be sold to the utility company.
   B. An inverter is used to produce alternating current.
   C. Net metering systems do not provide power at night.
   D. Net metering systems must include storage batteries.
12. An advantage of building-integrated solar modules is that they _____.
   A. are more energy efficient than other types of solar materials
   B. blend in with the appearance of traditional building materials
   C. can only be used to power various portable devices
   D. do not need a solar collector
13. Which of the following statements regarding solar energy cooling systems is *not* true?
   A. A drawback of solar-powered absorption cooling is that energy output is lowest when cooling demand is the highest.
   B. Solar power can be adapted to provide the heat source for an absorption cooling system.
   C. Solar power can be used to power a mechanical air-conditioning system.
   D. Solar power is typically used for heating rather than for cooling.
14. Which of the following can be used as a storage medium in sensible thermal energy storage (TES) systems?
   A. Paraffin.
   B. R-123.
   C. Sand.
   D. Wood.
15. Which of the following statements regarding sensible TES systems is true?
   A. Paraffin wax is the commonly used storage medium.
   B. The amount of energy stored depends partly on the initial and final temperatures of the storage medium.
   C. The temperature of the storage medium remains more constant than in a latent TES system.
   D. They have a higher storage density than latent TES systems.

Copyright Goodheart-Willcox Co., Inc.

CHAPTER 45 Energy Management

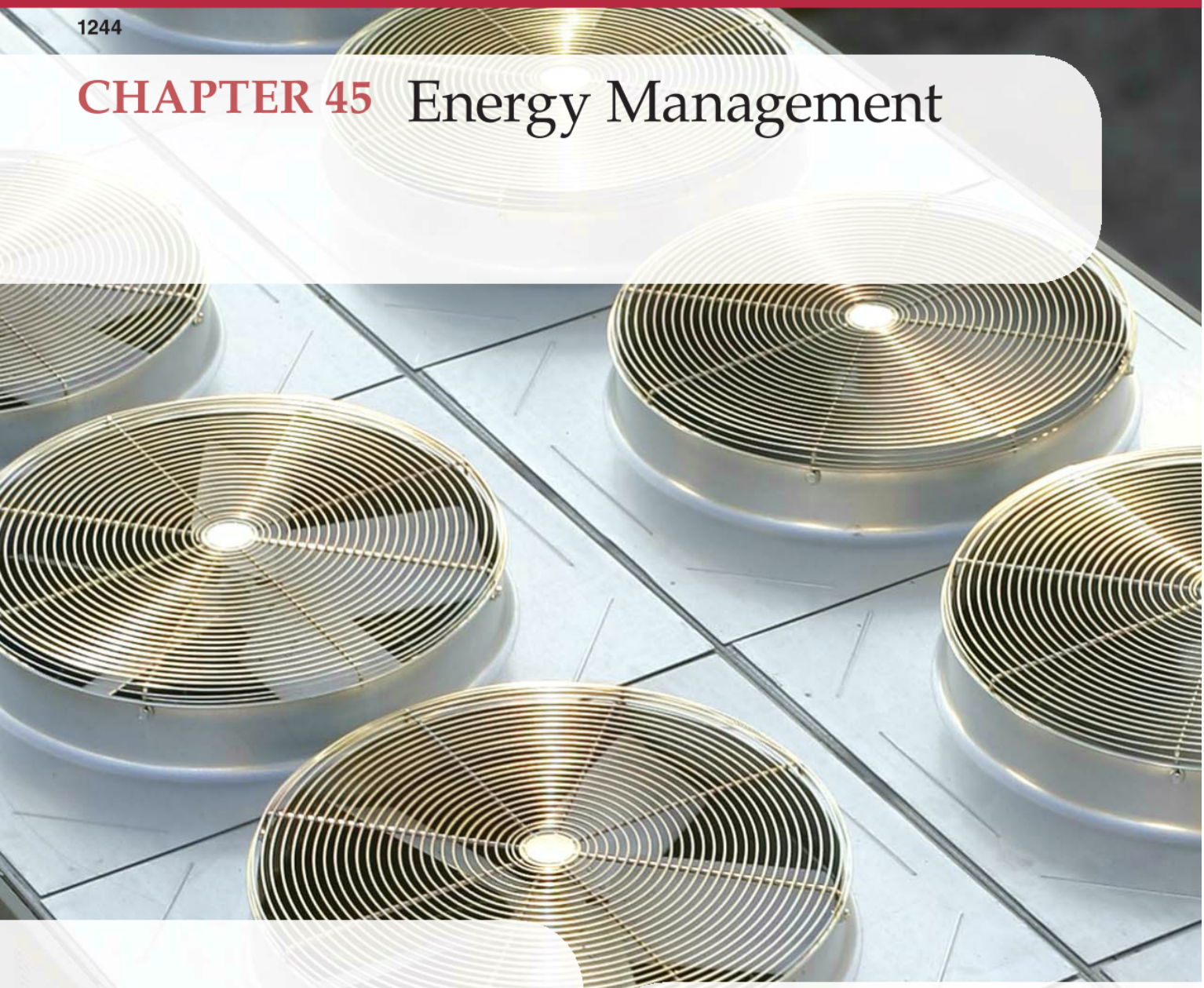

Chapter Outline

45.1 Energy Consumption
45.2 Energy Audits
45.2.1 Residential Energy Audits
45.2.2 Commercial and Industrial Energy Audits
45.3 Building Control Systems
45.3.1 Functions of a Building Control System
45.3.2 System Selection and Usage
45.4 Controllers for Building Control Systems
45.4.1 Localized Controllers
45.4.2 Remote Controllers
45.4.3 Centralized Computer Control
45.5 Building Control Protocols
45.5.1 BACnet
45.5.2 Other Building Control Protocols
45.6 Building Control System Diagnostics and Repair

Learning Objectives

Information in this chapter will enable you to:

- Identify factors affecting heat gain, heat loss, and building energy consumption.
- Explain the purpose of a building control system.
- Understand the energy audit process.
- Describe the three general types of building system controllers.
- Explain the purpose of building control protocols, such as BACnet.
- Summarize principles of control system diagnostics and repair.

Technical Terms

BACnet
building control system
centralized computer control
client
energy audit
energy use intensity (EUI)
gateway
localized controller
LonTalk
Modbus
remote controller
router
server
total energy management (TEM)
workstation

Review of Key Concepts

Reviewing these concepts from earlier chapters will help you understand new concepts presented in this chapter:

- Heat can be transferred through radiation, conduction, convection, or a combination of any of these three methods. Heat always flows from hot to cold. (Chapter 4)
- A control system is a collection of interacting components that work together to achieve a purpose. HVACR control systems regulate conditions such as temperature, pressure, and humidity within specified areas. Components used in control systems include sensors, controllers, and controlled devices. (Chapter 16)
- A controller is a circuit that responds to changes in the signals from sensors and issues signals to controlled devices. (Chapter 16)
- Direct digital control (DDC) is a type of control system that utilizes multiple digital and analog inputs and outputs in the form of low-voltage and/or low-current signals connected to a microprocessor that operates an HVAC or automated building system. (Chapter 16)
- Infiltration is the natural and unintentional or accidental leakage of outside air into a building through doors, cracks around windows, and other construction joints. (Chapter 28)

Introduction

Many buildings in the United States were built when energy was relatively cheap and few people understood the need to conserve and the benefits of conserving. Energy types, sources, and costs have changed dramatically since then. Older buildings are now being modified for better efficiency, and new buildings are designed to operate using less energy. Computer-controlled systems that condition different building areas independently are now used not only for precise comfort control but also for energy efficiency.

Video

- Performing an Energy Audit

45.1 Energy Consumption

Energy use in a building is determined by several factors, especially concerning energy loss. As related to HVAC, these primarily include the settings of the conditioned environment, the type of HVAC equipment in the building, regional climate, building type and materials (such as floors, walls, roof, and windows), and site-specific variables, such as heat produced by machinery, an industrial process, and the number and activity of occupants.

Many of these factors can be modified to reduce energy consumption, which would achieve significant energy savings. Devices that consume energy are the easiest to define in terms of direct energy usage. Therefore, the tendency is to concentrate conservation efforts in this area.

However, it is often more cost-effective to control heat loss and heat gain in an existing building prior to replacing outdated, inefficient HVAC equipment. The first step to reducing energy consumption is to minimize energy waste by improvements to the building's envelope. This is often accomplished through improved wall and ceiling insulation, caulking or replacing windows with more energy-efficient models, and updating lighting systems with energy-efficient controls, fixtures, and bulbs.

Heating and cooling should not be viewed as adding heat to or removing heat from room air to achieve a given temperature. Rather, heating and cooling are the processes of providing controlled heat loss or heat gain in a building. Heat loss and heat gain occur at the same time. One is usually greater than the other, depending on the outside temperature.

As shown in **Figure 45-1**, factors that influence heat loss or gain include:

- Infiltration—the passing of outside air into a building through doors, cracks around windows, and other openings.
- Exfiltration—heat loss or gain from conditioned air escaping a building through ceilings, walls, floors, windows, and other building components.
- Ventilation—forced airflow that takes place, by design, between the inside and outside of a building.
- Solar—heat generated as a result of the intensity and direction of the sun's rays.
- Lighting—heat generated in direct proportion to the wattage of the lights.
- Equipment—heat generated during operation.
- Occupants—sensible heat and latent heat (moisture) generated by people and their activities.

ollyy/Shutterstock.com; Arthur Eugene Preston/ Shutterstock.com

Figure 45-1. Factors that influence heat loss and heat gain in a building.

As a result of these and other factors influencing heat loss or heat gain, heating and cooling can be complex problems in a large commercial or industrial setting. Complexity increases dramatically with the number of systems to be integrated. Chapter 37, *Heating and Cooling Loads* covers these items in greater depth.

45.2 Energy Audits

An ***energy audit*** is the process of evaluating a building's energy consumption and identifying methods of reducing energy cost and usage. The energy auditing process generally involves the following steps:

1. Analysis of current energy usage.
2. Inspection of existing structure and equipment.

Copyright Goodheart-Willcox Co., Inc.

3. Additional testing.
4. Final analysis and recommendations.

For an energy audit of a single-family residence, these steps may be relatively simple. The entire audit could be completed by a single auditor in a relatively short time. For an energy audit of a large industrial facility, the audit process could involve a significant amount of testing and analysis performed by a team of auditors over a period of weeks or months.

45.2.1 Residential Energy Audits

The number of activities conducted as part of a residential energy audit can vary based on the preference of the homeowner. In many cases, a basic analysis and inspection by an energy auditor will identify recommendations for reducing energy usage. Often, the future cost savings enjoyed by the homeowner by implementing some recommendation exceeds the cost of the audit.

The analysis of current energy usage for a residence may be as simple as reviewing utility bills from the previous year. Comparing the energy usage to that of similar houses in the same locality provides a rough estimate of the overall energy efficiency.

The inspection portion of a residential energy audit can lead to many recommendations. The following provide an example of items included in a residential inspection:

- Windows. Windows have a large impact on infiltration, which in turn has a large impact on the amount of energy needed for heating and cooling. An energy auditor will note the type of window construction and inspect the "tightness" of the wall opening around the window.
- Doors. A door's material and the construction of its wall opening can have a large impact on the amount of air infiltration.
- Heating and cooling system. Older furnaces and air-conditioning units may consume more energy than newer units would. Improper maintenance or improper installation of components (such as ductwork, registers, and dampers) may result in excessive energy consumption. Thermostat type (for example, programmable vs. nonprogrammable) and settings are noted.
- Lighting. Lighting fixtures, type of lightbulbs in use, and use of timers and dimmers is noted in the inspection.
- Insulation/air barriers. The type and condition of insulation in walls, roofs, attics, and basements is inspected. Air infiltration and construction methods at wall corners, wall openings, wall-to-roof intersections, and other locations are evaluated.

A residential energy audit may incorporate additional safety inspections. An electrical safety inspection can involve a check of the service entrance, meter, service panel, wiring methods, and GFCI and AFCI usage. A combustion appliance inspection can test combustion appliances such as furnace, oven, and water heater to ensure a safe fuel supply and proper combustion.

A more thorough residential energy audit will incorporate additional testing. A blower door test can be performed to measure the overall amount of air infiltration and to identify specific locations of high infiltration. How to perform a blower door test is described in Chapter 30, *Ventilation System Service*. Thermal imaging may be used to identify areas of relatively high levels of heat transfer. Meters can measure the amount of electricity used by specific appliances.

A residential energy audit report provides the homeowner with a summary of the current level of energy usage, the energy-related findings of the inspection and testing, and specific suggestions of ways to reduce energy usage. Often, each suggestion will include an estimate of the cost to implement and an estimate of the reduction in energy usage and corresponding savings in energy cost. These estimates help the homeowner determine which suggestions to implement.

Pro Tip

Energy Auditing Resources

The US Department of Energy and many local utility companies provide energy auditing resources, such as evaluation forms and checklists. Utility companies may offer rebate programs for conducting an energy audit or implementing building improvements identified in an audit.

45.2.2 Commercial and Industrial Energy Audits

Energy audits of commercial and industrial facilities are far more complicated than residential energy audits. Commercial and industrial energy audits are normally conducted by a team of energy auditors or, in large corporations, by a specific group within the company.

Commercial and industrial energy audits follow the same basic procedure as residential energy audits, but each step in the process is much more involved. The analysis of current energy usage could include a detailed analysis of all equipment in the facility.

Copyright Goodheart-Willcox Co., Inc.

In addition, the method of energy transmission throughout the building or complex is evaluated. A large amount of historical data may be available from company records and from the utility company.

Rate plans for commercial and industrial energy usage can be complicated. Energy cost can vary throughout the day. The cost may be based on a variety of factors, such as the time of day, the day of week, and the total amount of energy being used at a given time.

Commercial and industry energy audits may include extensive testing and measuring of equipment. This testing may be performed over a period of weeks to allow for a range of conditions.

The analysis phase is critical when performing a commercial or industrial energy audit. Due to the complexity of energy usage in these environments, a single change, such as replacing a blower in an air handler, can impact the entire energy system. Evaluating these impacts, estimating implementation costs, and estimating future cost savings is often completed by engineers or highly skilled energy auditors.

45.3 Building Control Systems

Energy management or control systems have been used for many years to manage individual systems within buildings. Each system within the building is optimized or calibrated to get maximum efficiency. However, although each system can be optimized for efficient performance, multiple systems require multiple management protocols. This often causes inefficiency, because the systems cannot communicate and coordinate with each other.

The green movement has produced a number of new ideas and ways of thinking about energy management. One such idea is ***total energy management (TEM)***. TEM is a conservation concept in which a building is viewed in terms of its total energy usage, rather than by analyzing the requirements of separate systems, **Figure 45-2**.

TEM is accomplished using a ***building control system***, which acts as a master system that controls all of the individual energy management systems, or subsystems. You may encounter other names for building control systems, such as *building automation systems (BAS)*, *building automation and control networks*, *facility management systems*, *building management systems*, and *energy management systems (EMS)*. All of these terms mean basically the same thing, although some of them focus more on one aspect of building control than others. For example, energy management systems tend to focus on reducing energy use and costs.

A B

NexRev Inc.

Figure 45-2. A—An energy management system incorporated into a building's electrical service. B—An energy management system's service panel with cover removed showing wiring terminals.

Copyright Goodheart-Willcox Co., Inc.

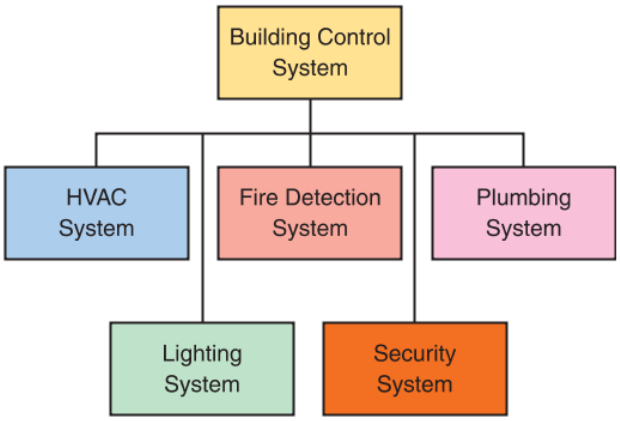

Goodheart-Willcox Publisher

Figure 45-3. A building control system manages all of the various systems in a building.

Code Alert

NEC EMS Definitions

Section 750.2 of the National Electrical Code (NEC) provides definitions for several useful terms. As related to this topic, *control* is defined as "the predetermined process of connecting, disconnecting, increasing, or reducing electric power." The term *monitor* is defined as "an electrical or electronic means to observe, record, or detect the operation or condition of the electric power system or apparatus." *Energy management system* is defined as "a system consisting of any of the following: a monitor(s), communications equipment, a controller(s), a timer(s), or other device(s) that monitors and/or controls an electrical load or a power production or storage source." When conversing with colleagues and customers, confirm terminology so everyone can communicate effectively.

A building control system increases building efficiency by causing each subsystem to operate at peak efficiency without compromising functionality of any of the other subsystems. Unlike system-specific energy management systems, a building control system allows monitoring of multiple types of energy usage in real time and responds quickly to changing conditions and energy needs. See **Figure 45-3**. This ability provides the flexibility needed to run the entire building at peak efficiency at all times. This, in turn, allows facilities and building managers to conserve energy and cut costs. At the same time, it meets the needs of the building's users.

For example, the security system in a building may indicate that an area is vacant for the night. This information is obtained from motion detectors in the building and passed on to the building control system. The building control system then instructs the HVAC controller to lower blower speed and adjust the set point of the area thermostat to allow the temperature to rise or fall beyond the normal set point temperature. At the same time, the building control system issues a command to the lighting controller to dim or turn off lights in the area. By integrating the security, HVAC, and lighting systems, the building control system manages energy use more efficiently than any of the systems could if they were managed independently.

Code Alert

Load Management Restrictions

Section 750.30 of the NEC places restrictions on electrical load management. For example, an energy management system cannot override load shedding controls that ensure the minimum electrical capacity is available for fire pumps, emergency systems, legally required standby systems, and critical operations power systems. Other restrictions prevent an energy management system from disconnecting power to certain circuits and from overloading a branch, feeder, or service circuit.

45.3.1 Functions of a Building Control System

At a minimum, building control systems integrate a building's mechanical, electrical, and plumbing systems. Control of HVAC equipment (including air handling units, rooftop units, heat pumps, chillers, and boilers) constitutes a major part of a building control system. See **Figure 45-4**. Security, fire alarm and prevention, lighting, and plumbing systems are also usually integrated into the systems. Even elevators, escalators, and other people-moving devices can be incorporated.

45.3.2 System Selection and Usage

The first step in selecting a building control system is to determine the energy needs of the building. This is done through the use of an energy audit. An energy audit is the recording and calculating of energy consumption in a building. Initially, an auditor walks through the structure noting all areas where waste and inefficiency are obvious. This walk-through is followed by an accurate recording of all energy consumed during the audit. The recording is usually performed over a period of a month or two. An example of the audit form used in this process is shown in **Figure 45-5**.

Information gathered as part of the total energy audit includes the following:

- Previous year's energy use data.
- Weather data (for accurate comparisons).

Copyright Goodheart-Willcox Co., Inc.

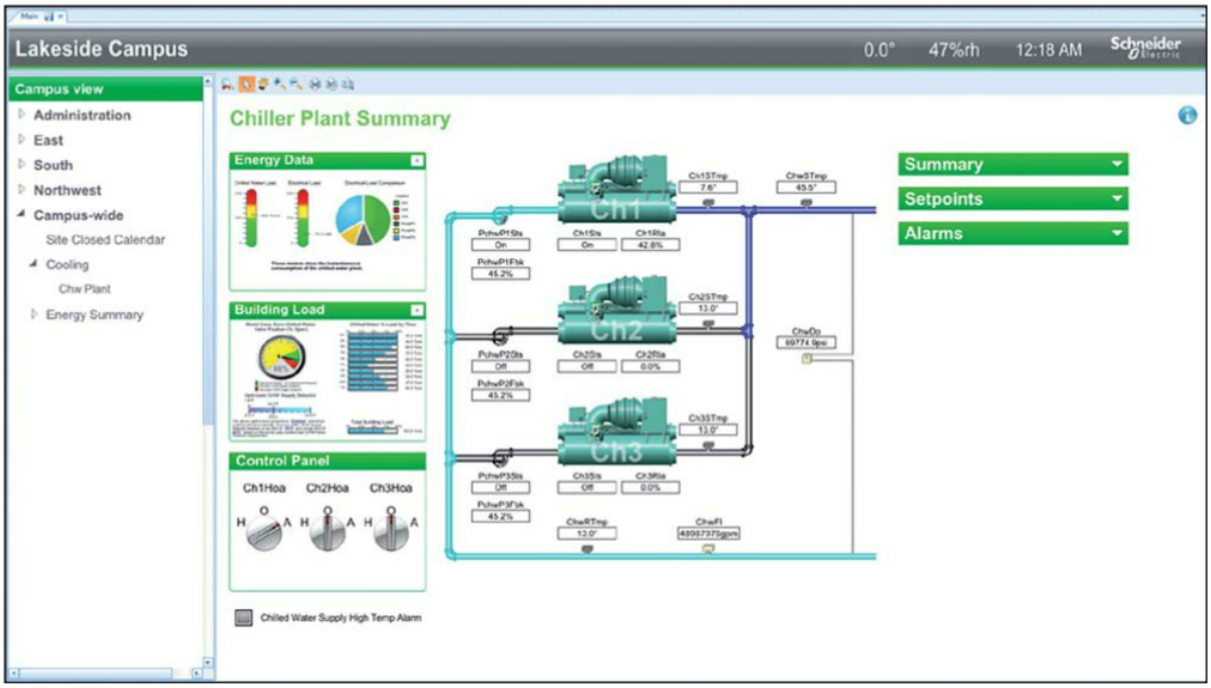

Schneider Electric

Figure 45-4. Building control system monitoring the status of a chiller plant housing three chillers. A single building control system can manage the systems in a campus consisting of several buildings.

- Building data, such as plans or accurate floor layouts.
- Equipment operation logs.
- Other information on any aspect of energy consumption within the structure.

The energy audit is needed to compare against energy use intensity. The ***energy use intensity (EUI)*** acts as a reference showing the annual energy use per square foot for a commercial building. This can vary by the type of building and by different climate zones. EUI is calculated by dividing energy consumption in Btu by the square footage of conditioned space. This calculation is shown in the lower-right corner of the energy audit form in **Figure 45-5**.

The sum of all this information is then processed using computer programs specifically designed for this purpose. The overall status of energy management for the structure is determined. Then, based on the cost, time, and efficiency, a building control system is chosen.

45.4 Controllers for Building Control Systems

There are three general types of energy management system controllers: localized controllers, remote controllers, and centralized computer control. Each type of system controller uses direct digital control. *Direct digital control (DDC)* is a type of control system that utilizes multiple digital and analog inputs and outputs in the form of low-voltage and/or low-current signals connected to a microprocessor that operates an HVAC or automated building system.

Code Alert

Class 2 Circuits

Many of the circuits used in DDC are Class 2 circuits. These are power-limited circuits that often run on 24 Vac for building control. Article 725 of the NEC covers Class 1, Class 2, and Class 3 remote-control, signaling, and power-limited circuits. Review the requirements of such circuits before servicing or installing any building control system.

DDC processes input and output information according to the user's preset instructions and sends out control signals to various controlled devices to condition the necessary areas of the building. Direct digital control is an extremely versatile and powerful form of control. It can be used to manipulate valves, damper position, fan speed, and compressor operation for multiple areas of a building. It eliminates the need for conventional thermostats, humidistats, and timers.

Copyright Goodheart-Willcox Co., Inc.

Energy Management Form

Building: Year:

Month	Heating Degree Day	Cooling Degree Day	Electricity						Purchased Steam						Fuel							Total Energy Cost
															Oil			Check: Gas ___ Coal: ___ Other: ___			Fuel/ Degree Days	
			kWh	kWh/ Degree Day	kW Demand		Cost		M (lbs)	M (lbs)/ Degree Day	lbs/hr Demand		Cost		Quantity (Gallons)	Cost		Quantity	Cost			
					Actual	Billed	Total	Per Unit			Actual	Billed	Total	Per Unit		Total	Per Unit		Total	Per Unit		
1	2	3	4	5	6	7	8	9	10	11	12	13	14	15	16	17	18	19	20	21	22	23
JAN																						
FEB																						
MAR																						
1st Quarter																						
APR																						
MAY																						
JUN																						
2nd Quarter																						
JUL																						
AUG																						
SEP																						
3rd Quarter																						
OCT																						
NOV																						
DEC																						
4th Quarter																						
Total (Year)																						

Building Data	Annual Energy Consumption in Btu Quantity		Conversion Factor	Btu/yr	Energy Use Intensity
Gross Conditioned Area (ft²):	Electricity:	kWh	X 3413		EUI = Total Energy Consumption Btu/year / Gross Conditioned Area (ft²)
General Notes:	Purchased Steam:	(M) lbs	X 1,000,000		= _____ Btu/ft²/yr
	Natural Gas:	MCF	X 1,030,000		
	Oil:	Gallons	X #2 – 138,700, #6 – 149,700		
	Other Fuel:		X _____	Total: _____	

© National Electrical Contractors Association

Form copyrighted by National Electrical Contractors Association

Figure 45-5. A standard energy management form used in conducting energy audits. The energy use intensity (EUI) is calculated in the lower right-hand corner.

Copyright Goodheart-Willcox Co., Inc.

45.4.1 Localized Controllers

A ***localized controller*** is a building system controller used to provide independent control for a specific system or piece of equipment. This type of controller is available at a relatively low cost. Each localized controller is *independent*. It controls its specific system and has no interaction with any other controlling device. Typical localized controllers include time clocks, alarms, and local optimization devices, such as controllers that operate dampers based on zone temperatures.

Localized controllers are used for relatively simple HVAC system control. They are used when individual system efficiencies are more important than total system management or when minimum cost is desirable.

45.4.2 Remote Controllers

A ***remote controller*** is a building system controller that can control the operation of one or more energy-consuming devices from a remote location. Newer remote controllers have wireless capabilities and contain microprocessors that allow programmable options and settings. Remote controllers are the most common type of total energy management system controller in use today.

Functions typically found in a remote controller include the following:

- Remote start/stop—turns systems and devices on and off at certain times.
- Optimized start/stop—turns devices on and off based on a preprogrammed schedule to minimize energy use.
- Status monitoring—indicates whether the system is operating.
- Alarms—indicate if a system is operating incorrectly.
- Demand control—monitors overall demand for electrical power and modifies for minimum energy consumption. This may include shutting down lights, lowering blower speeds, or changing room temperatures based on occupancy in different sections of a building. For example, demand-controlled ventilation systems use carbon dioxide sensors or other means to determine when an area is occupied and condition the area only when people are present. This helps avoid wasting energy on conditioning unoccupied spaces.
- Duty cycling—establishes the most efficient run times and then cycles systems on and off accordingly to maintain minimum energy consumption.

Code Alert

Field Markings

When an energy management system is used to control electrical power through remote means, Section 750.50 of the NEC requires that a directory identifying the controlled devices and circuits be posted on the enclosure of the controller, disconnect, or branch-circuit overcurrent device.

45.4.3 Centralized Computer Control

A ***centralized computer control*** is a building system controller that consists of one or more centralized computers that make control decisions based on operating data, programmed information, and data already stored in computer memory. This is the most elaborate and the most costly of the three types of systems. However, it offers the widest range of control functions. In large, complex structures, this centralized system results in the best overall energy consumption control.

Centralized computer control is used in most newly constructed large building complexes. Wiring is relatively easy to install during the construction stage. However, wireless systems now allow many older structures that use large amounts of energy to be retrofitted with these controllers. In fact, wireless technology is now beginning to replace the older wired technology even in new construction, because it allows more flexibility over the lifetime of the building.

Functions of a centralized computer system include all of the tasks performed by remote and localized controllers. However, computer controllers may also have other features. Some systems available today monitor utility usage and verify billing. They may also schedule and notify personnel of all needed maintenance functions.

The centralized computer control system is classified into two general categories, based on system construction:

- A packaged centralized computer control is a complete system furnished by a single manufacturer. The manufacturer also usually provides some level of service and follow-up after installation. In some cases, the manufacturer performs ongoing monitoring services for the system.
- A hybrid centralized computer control is a system composed of components from several manufacturers. These systems may be designed by personnel within the company or through

Copyright Goodheart-Willcox Co., Inc.

an outside firm. The same personnel may then assume total system responsibility.

45.5 Building Control Protocols

Early building control systems used pneumatic controls that were connected to a central controller or relay control module. These systems were expensive to install, requiring the use of hoses for pneumatic actuators and controls. Most pneumatic systems were also designed to operate only with the specific manufacturer's equipment. If a pneumatic control failed, it had to be replaced by one from the same manufacturer.

With the introduction of computers, electrically actuated controls became feasible. However, most systems were proprietary designs. This required that service technicians be trained in the operation of that particular company's system. In addition, most buildings used one type of system for their HVAC control and different systems for fire, safety, and security controls. These systems could be confusing to operate and did not "talk" to each other. Because these systems were not interconnected, duplicate wiring and controls for different applications within the same building resulted. Also, significant training was needed for building operators of each specific control system.

45.5.1 BACnet

To reduce the amount of wiring and training needed and to allow for the use of products from different manufacturers within a single system, a common method of building control was needed. ***BACnet*** (short for "building automation control network") is a common protocol or set of rules for software and hardware communication that allows controllers from one company to work with those from another company. Unlike many other network protocols, BACnet was designed specifically for building automation and control. Its purpose is to provide a standard format for communication between components of building automation used for networking, printing, operating system software, and hardware integration.

BACnet was originally an ANSI (American National Standards Institute) and ASHRAE (American Society of Heating, Refrigeration and Air-Conditioning Engineers) standard for common communication between HVAC and building automation devices. It was developed primarily for use in the United States. In 2003, BACnet became an ISO (International Organization for Standardization) standard; it is now recognized throughout the world as the standard format for control language.

In addition to allowing devices from different manufacturers to communicate, BACnet includes a "network layer" that allows communication among different types of networks. The following common network protocols are recognized:

- Ethernet.
- ARCNET.
- LonTalk.

For other types of network communications, BACnet includes rules for master-slave/token passing (MS/TP), point-to-point (PTP), and BACnet/IP (Internet Protocol). These rules are designed not only to allow use by networks of today, but also by other network types that may be developed in the future.

BACnet-controlled systems may include the following components:

- Workstations.
- Routers.
- Gateways.
- Native BACnet controllers and devices.
- Nonnative controllers and devices.

These components are structured similar to a pyramid, **Figure 45-6**. One or more ***workstations*** are used to control all of the building systems. BACnet/IP

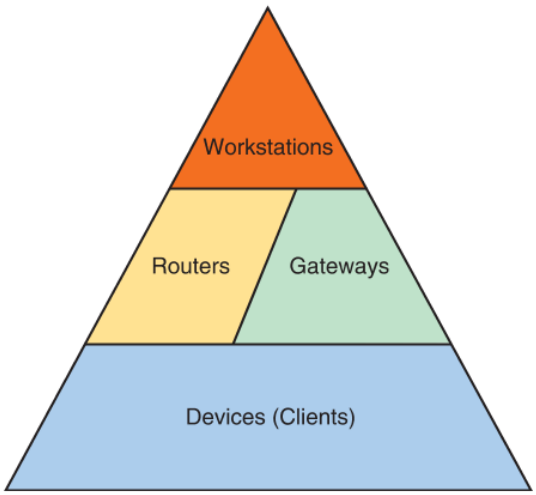

Goodheart-Willcox Publisher

Figure 45-6. BACnet system configuration. The workstations from which the building control system is managed are at the top of the pyramid. Routers and gateways connect other networks and nonnative devices to the BACnet network so that all of the systems can be run from a single user interface.

Copyright Goodheart-Willcox Co., Inc.

protocol allows the viewing and operation of systems from workstations remotely via the Internet, so the controlling workstations do not necessarily need to be within the building, **Figure 45-7**.

Information from the BACnet routers and gateways are supplied to the workstation. Technicians use the workstations to monitor, control, and coordinate system functions. Troubleshooting is also performed at the workstation.

Routers and gateways perform interpreting tasks among the controllers and devices at the pyramid's base. ***Routers*** are used to connect different types of networks within the building, as shown in **Figure 45-8**. One router is required for each type of network other than the base network to which the controlling workstation is connected, **Figure 45-9**.

Even within a single network, some existing devices may not recognize the BACnet protocol. ***Gateways*** are similar to routers but are more complex. In addition to connecting different types of networks within a system, they connect nonnative controllers and devices (those that do not "understand" the BACnet protocol) to the system. The gateway translates BACnet instructions into the nonnative or proprietary device format (protocol). The gateway then interprets the information from the devices back to BACnet so that it can be understood by the workstations. See **Figure 45-10**. BACnet-compatible devices (native and

Daikin Applied

Figure 45-7. With mobile devices and BACnet Internet Protocol, building control can be done from nearby or far away.

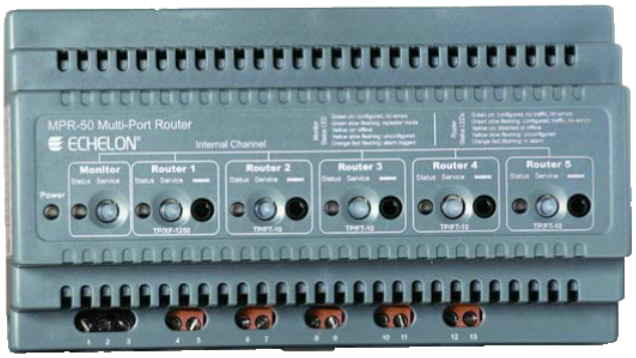

Honeywell, Inc.

Figure 45-9. A multiport router for use in a building control system.

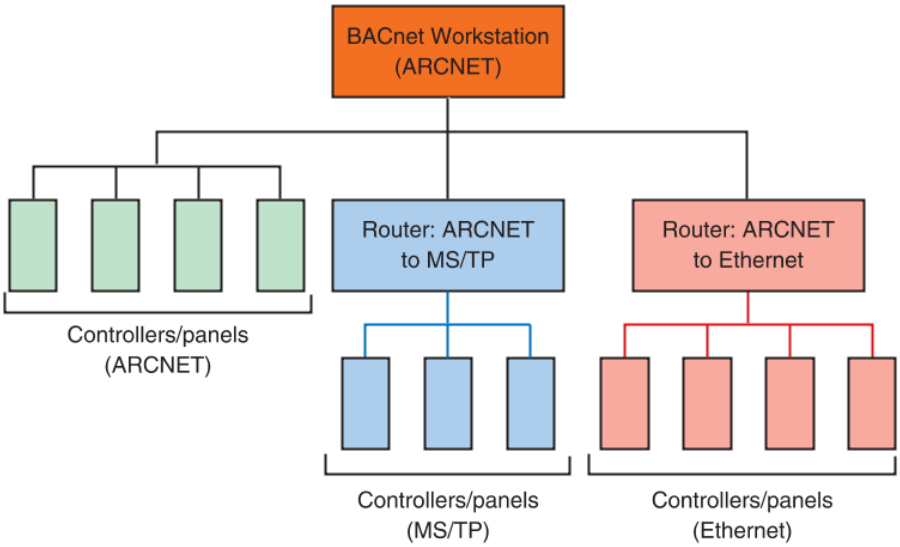

Goodheart-Willcox Publisher

Figure 45-8. Routers are used to connect other types of networks to the controlling network. In this example, the controlling network is ARCNET, but it could be Ethernet or other types of networks, as well.

Copyright Goodheart-Willcox Co., Inc.

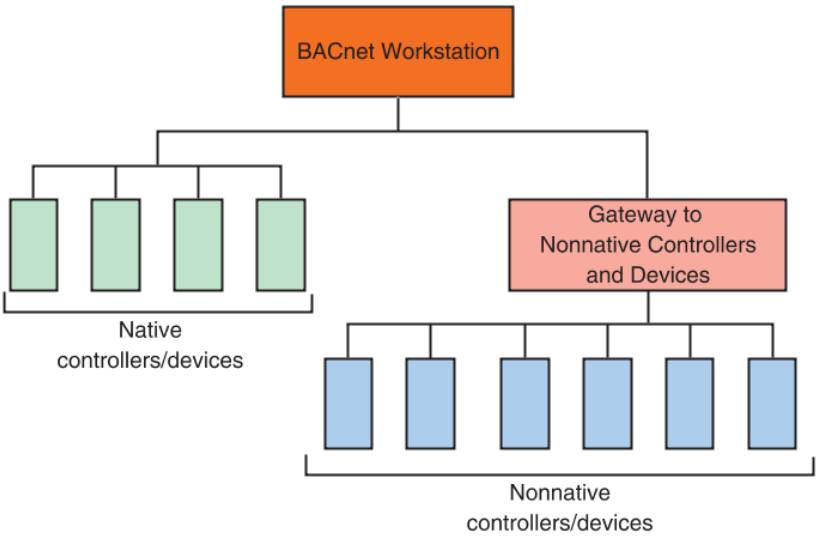

Goodheart-Willcox Publisher

Figure 45-10. Gateways allow controllers, sensors, timers, and other equipment that do not recognize the BACnet protocol to be connected and controlled by the BACnet network.

nonnative) include temperature sensors, airflow measurement devices, humidity measurement devices, and most HVAC-controlled devices.

BACnet uses a client/server model. The controllers and controlled devices in a building control system that uses BACnet may be referred to as ***servers***. Examples of servers are HVAC controllers that operate individual HVAC units, **Figure 45-11**.

Honeywell, Inc.

Figure 45-11. A constant air volume controller like this is a good example of a server in a building control system.

Workstations act as ***clients***, which send instructions to and receive information from the servers. To ensure that devices may both receive commands from workstations and send feedback on operational status, all the devices on the network (clients and servers) need to be able to "talk" to each other. This is the job of the routers and gateways, **Figure 45-12**.

Conversion of an existing building to BACnet-automated operation may involve changing out many control devices and sensors. Most new systems today are wireless, but even in wired systems, wireless

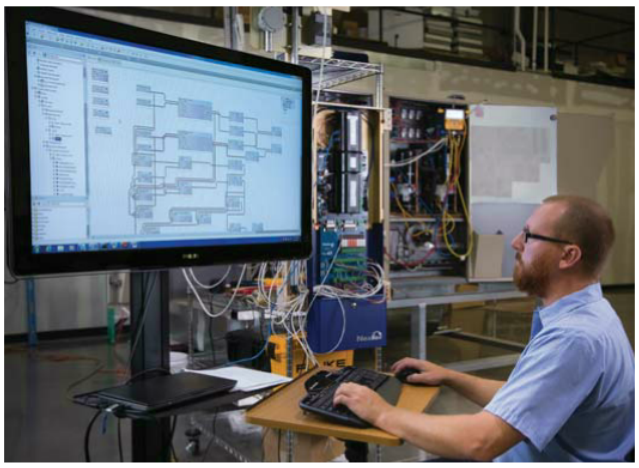

NexRev Inc.

Figure 45-12. A technician monitoring system operation at a building control workstation.

12

Copyright Goodheart-Willcox Co., Inc.

transmitters are used to avoid hard wiring in difficult to reach locations. Wireless transmitters operate on RF (radio frequency) waves that relay data to a BACnet controller. The sensors send a data signal to the radio frequency receiver that is connected to a BACnet server.

45.5.2 Other Building Control Protocols

Although BACnet is considered the industry standard, other protocols are also in use. For example, ***LonTalk*** is a proprietary communications protocol developed by Echelon that permits integration of components from different manufacturers. It provides a common assignment of data input and output parameters to allow communication between controllers and controlled devices.

Although LonTalk was originally manufactured only by the Echelon Corporation, it is now licensed to other electrical controls manufacturers. As a result, LonTalk is based on a different communication protocol and does not communicate directly with BACnet devices. However, BACnet systems can recognize and incorporate some LonTalk devices.

Another communication protocol used in building control and automation is ***Modbus***. This protocol was originally developed in the 1970s for use with programmable logic controllers (PLCs). Modbus was initially developed by Schneider Electric. It is now updated and developed as an open protocol by the Modbus Organization.

45.6 Building Control System Diagnostics and Repair

Diagnosis and repair of control system problems is the key to efficient system operation. Simple control systems are often more difficult to diagnose and repair than more complex electronic control systems. Simple systems, such as controls for basic gas or oil furnaces, usually involve mechanical and individual electrical components. The more advanced building control systems use electronic circuit boards and offer computer diagnostic advantages.

Manufacturers of controls typically provide a troubleshooting guide. Also refer to the control system manufacturer's troubleshooting guide. Building control system problems can be divided into three primary areas:

- Building Ethernet/IP communication failure.
- Controller and cable loss of signal.
- Component failure.

Figure 45-13 shows part of a troubleshooting guide for a building management system. Note that

Troubleshooting Guide		
Problem	**Possible Cause**	**Remedy**
No LED display on display panel.	1. On-off power switch is in the off position.	1. Slide switch to the on position.
	2. Loss of input supply voltage.	2. Take a voltage reading across input voltage terminals on the terminal strip of the interface PC board. There should be a reading of input voltage. If not present, check for a tripped circuit breaker. Verify primary input (120 V) at the electrical outlet and secondary output voltage at the secondary of the transformer.
	3. Blown fuse on interface board.	3. Check for improper wiring or shorts to ground and replace fuse if necessary.
	4. Loose ribbon cable connection.	4. Check the ribbon cable connection on the processor and interface PC boards to see that it is properly inserted.
	5. Faulty microprocessor PC board.	5. Take a voltage reading across the quick disconnects on the microprocessor PC board. There should be a reading of input voltage. If there is no voltage, replace the ribbon cable. If there is voltage, replace the microprocessor PC board.
LED display frozen. Clock will not advance and program modes cannot be accessed.	1. Defective microprocessor PC board.	1. Replace microprocessor PC board.

Goodheart-Willcox Publisher

Figure 45-13. An excerpt from a typical control system troubleshooting guide. Notice that complete replacement of a circuit board is sometimes recommended.

Copyright Goodheart-Willcox Co., Inc.

repair may include replacement of a given circuit board within the control device.

It is best to start troubleshooting building control issues from the macro view down to the component or actuator level. Determine if the problem is widespread (an entire system outage) or localized (one section of a building). If large portions or an entire system is down, there is most likely an Ethernet problem. The following are basic troubleshooting procedures for various issues:

Troubleshooting a Building Ethernet/IP Communication Fault

1. Use the main controller troubleshooting software to run a diagnostic of the system.
2. Check the network connectivity alarms.
3. Look for Ethernet port communication errors by checking the LEDs.
4. Reboot any routers that have indicator alarms.

Troubleshooting a Controller and Cable Loss of Signal

1. Once the failure has been isolated to a specific area of a building or specific function, check the controller. Controller alarm and failure LEDs may be set.
2. Check the cable of twisted pair wires by using a cable analyzer.
3. Check between the controller and controlled device for shorts and grounds.

Troubleshooting to Component Level

1. Measure the current between the sensor or actuator and the controller.
2. Based on the measurement, verify whether the communication between the controller and the controlled device is the correct signal for the operation being commanded.
3. After identifying the source of the failure to a specific controlled device, such as a sensor or actuator, that device can be quickly analyzed and replaced if necessary.

Troubleshooting an Electrical Failure

The following are some general steps to pursue in the event of an electrical failure. Always refer to the control system manufacturer's troubleshooting guide.

1. Check fuses or circuit breakers and the power-in with a suitable test light or voltmeter.
2. Check the main switch and thermostat switch to make sure they are in the closed position.
3. Check the thermostat. It must be on a setting that will close the thermostat switch.
4. Check the contactor or motor starter. It must be pulled in. If it is not, the contactor circuit is open. Review the following points:
   - Contactor is not buzzing and its circuit is open. Contactor coil is not powered. Check the control circuit using a voltmeter and ohmmeter.
   - Contactor is buzzing and its circuit is open. Contactor coil is operating, but the armature is not pulled in. Either the armature is stuck or the control coil voltage is too low.
   - Contactor circuit is closed and the motor hums. Motor is powered but will not start. Check the capacitors, if used, for low voltage. Check for excessive pressures in the system.
   - Contactor circuit is closed and the motor does not hum. Motor is not powered. Check motor voltage for safety. If not powered, then check for an open circuit by continuity test after removing any chance of a live circuit or capacitor discharging.

Copyright Goodheart-Willcox Co., Inc.

Chapter Review

Summary

- HVAC energy usage in buildings depends on the desired conditioned space settings, regional climate, HVAC equipment, building type and materials, and site-specific variables. Heat loss and gain are greatly influenced by infiltration, exfiltration, ventilation, lighting, solar conditions, equipment, and occupants.
- An energy audit is the process of evaluating a building's energy consumption and identifying methods of reducing energy cost and usage.
- A building control system is a master system in a building that controls all of the building's subsystems, including HVAC, electrical, plumbing, security, fire prevention, and other systems.
- The three general types of energy management system controllers are localized controllers, remote controllers, and centralized computer control.
- Several standards and protocols have been developed so the components used in building control systems can communicate and operate together even when produced by different manufacturers. Some of the industry protocols in use today are BACnet, LonTalk, and Modbus.
- Older building controls using individual and independent mechanical and electrical control may be difficult to diagnose and repair. Newer building controls that use electronics and networked computer controls, although more complex, often have system-wide monitoring for easier diagnosing of problems.

Review Questions

Answer the following questions using the information in this chapter.

1. The passing of outside air into a building through doors, cracks around windows, and other openings is _____.
   A. air conditioning
   B. exfiltration
   C. infiltration
   D. ventilation
2. Heat loss or gain from conditioned air escaping a building through ceilings, walls, floors, windows, and other building components is _____.
   A. air conditioning
   B. exfiltration
   C. infiltration
   D. ventilation
3. The acronym *TEM* stands for _____.
   A. thermal efficiency management
   B. ton of energy magnitude
   C. total energy management
   D. totally efficient machine
4. Which of the following systems is *not* typically managed by a building control system?
   A. Fire prevention system.
   B. Grievance management system.
   C. HVAC system.
   D. Security system.
5. Recording and calculating the consumption of a building's individual types of energy is one step of performing a(n) _____.
   A. building control protocol
   B. energy audit
   C. energy management strategy
   D. energy use intensity
6. Dividing energy consumption in Btu by the square footage of a conditioned space shows the relationship of Btu consumed per year for a given area, which is called the _____.
   A. efficiency usage indication
   B. electric utility indication
   C. electricity usage index
   D. energy use intensity
7. The use of a control system that utilizes multiple digital and analog inputs and outputs in the form of low-voltage and/or low-current signals connected to a microprocessor that operates an HVAC or automated building system is called _____.
   A. direct digital control
   B. local control
   D. pneumatic control
   D. remote control
8. In energy management systems, a building system controller that provides independent control for specific systems or equipment is called a _____.
   A. centralized computer control
   B. localized controller
   C. pneumatic controller
   D. remote controller

Copyright Goodheart-Willcox Co., Inc.

9. Energy management system controllers that can control the operation of energy-consuming devices from a distant location are called _____.
   A. centralized computer controls
   B. localized controllers
   C. pneumatic controls
   D. remote controllers
10. Early building control systems used _____.
   A. centralized computer control
   B. localized controllers
   C. pneumatic controls
   D. remote controllers
11. The network protocol that is now recognized as a worldwide standard for building automation and control systems is _____.
   A. BACnet
   B. BackTalk
   C. LonTalk
   D. Modbus
12. All of the following are sets of rules within BACnet that allow communication with other types of networks, *except* _____.
   A. BACnet/IP
   B. direct digital control (DDC)
   C. master-slave/token passing (MS/TP)
   D. point-to-point (PTP)
13. Which of the following elements is at the top (peak) of the BACnet "pyramid", issuing orders to and requesting information from the other elements?
   A. Controllers.
   B. Workstations.
   C. Routers.
   D. Gateways.
14. In a BACnet-driven building control system, the individual devices (such as controllers that operate individual HVAC units) may be called _____.
   A. clients
   B. networks
   C. servers
   D. workstations
15. Building control systems are often easier to troubleshoot than the less complex controls for individual systems because building control systems typically offer _____ that are often missing in the simpler systems.
   A. built-in computer diagnostics
   B. more mechanical components
   C. troubleshooting guides
   D. instruction manuals

Copyright Goodheart-Willcox Co., Inc.

CHAPTER 46 Energy Conservation

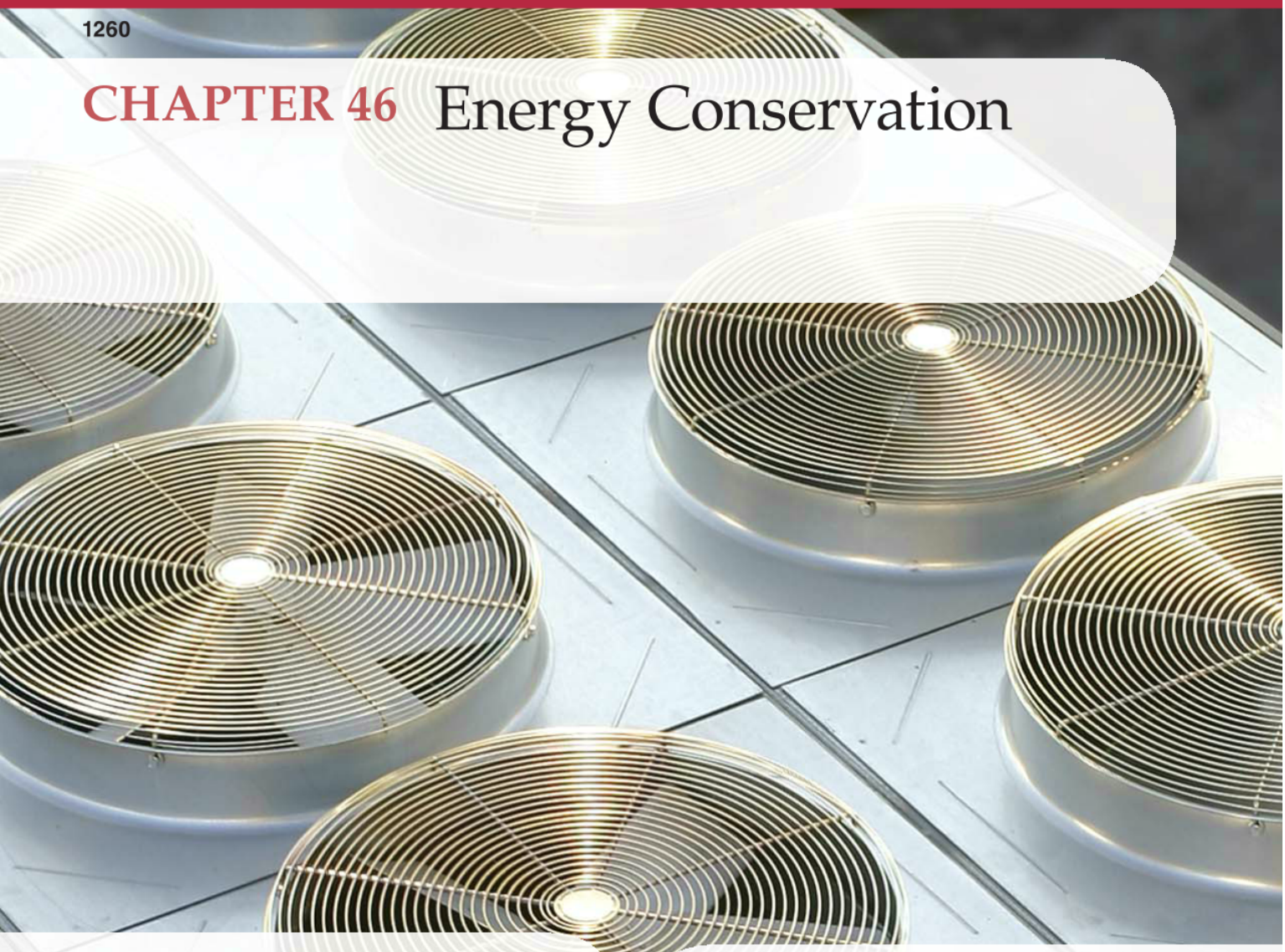

Chapter Outline

46.1 Building Efficiency
- 46.1.1 Insulation and Vapor Barriers
- 46.1.2 Roof Construction
- 46.1.3 Commercial Construction
- 46.1.4 Energy-Efficient Construction
- 46.1.5 Determining Heating and Cooling Costs

46.2 HVAC Equipment Efficiency
- 46.2.1 Furnaces and Boilers
- 46.2.2 Air Conditioners
- 46.2.3 Heat Pumps

46.3 HVAC Alternatives for Energy Conservation
- 46.3.1 Energy-Saving Components
- 46.3.2 Total Energy Systems
- 46.3.3 Evaporative Cooling Designs

46.4 The Role of the HVACR Technician
- 46.4.1 Know and Explain the Options
- 46.4.2 Perform Proper Installation and Maintenance

Learning Objectives

Information in this chapter will enable you to:

- Explain how the construction of a building relates to its heating and cooling efficiency.
- Describe how the degree-day method can be used to estimate heating and cooling costs.
- Differentiate among the various efficiency ratings used to evaluate furnaces, air conditioners, and heat pumps.
- List individual components that can be changed or added to an existing HVAC system to increase energy efficiency.
- Describe alternative systems and solutions that may be used to increase energy conservation.
- Explain the role of the HVACR technician in energy conservation.

Technical Terms

climate zones
coefficient of performance (COP)
energy conservation
energy efficiency ratio (EER)
Energy Star
heating seasonal performance factor (HSPF)
ponded roof
seasonal average COP
seasonal energy efficiency ratio (SEER)
structural insulated panel (SIP)
total energy system

Review of Key Concepts

Reviewing these concepts from earlier chapters will help you understand new concepts presented in this chapter:

- A building envelope consists of the components of the structure (such as walls or floors) separating conditioned space from unconditioned space. A "tight" building envelope minimizes the amount of air passing through the envelope between conditioned and unconditioned space. (Chapter 30)
- The thermal resistance, also known as the R-value, of a material or building component is a measure of its resistance to heat transfer. The higher a material or component's R-value, the slower the rate at which heat will transfer through that material or component. (Chapter 37)
- Degree-days are a measure of the heating or cooling needed for a given region. Daily average temperatures below 65°F are considered heating degree-days. Those above 65°F are classified as cooling degree-days. (Chapter 27)
- The measurement of furnace efficiency is the annual fuel utilization efficiency (AFUE) rating. The higher the AFUE rating, the more efficient the furnace. (Chapter 41)
- A heat recovery ventilator (HRV) is a heat exchanger that allows heat to pass between incoming fresh air and outgoing stale air. This pretreatment of the incoming air improves system efficiency. An energy recovery ventilator (ERV) does the same as an HRV, but it also transfers humidity. (Chapter 28)
- An evaporative cooling system achieves cooling by passing warm, dry air over water, resulting in evaporation. (Chapter 34)

Introduction

There is a growing movement in the HVACR industry toward "going green." This includes offering cost-effective, environmentally friendly energy conservation options to both business and residential customers. In the context of HVACR, ***energy conservation*** is a reduction in the amount of energy needed for HVACR-related processes and equipment operation. However, energy conservation consists of more than just installing newer, more efficient systems. It also includes installing the new systems correctly and servicing or upgrading existing systems to improve their efficiency.

A building's energy efficiency depends both on the physical characteristics of a building and on its existing HVAC system. An efficient building design and efficient HVAC equipment can save a building owner a significant amount of money and reduce the building's impact on the environment.

Video

- Promoting Energy Efficiency

46.1 Building Efficiency

A building's construction and materials contribute greatly to its level of energy efficiency. Heating and cooling systems create some of the most energy-intensive loads in any building, whether residential or commercial. See **Figure 46-1**.

Existing buildings can be examined for heat loss using a thermal imaging camera that shows different temperature ranges in contrasting colors. Thermal imaging is used to check both the interior and the exterior of the structure. The entire building envelope is examined, and areas of air infiltration are identified. Each of these areas can then be evaluated and repaired. **Figure 46-2** shows a thermal image being made of a typical home.

The location of a building determines how much solar load the interior will receive, and the locations of windows, doors, and other openings help determine how much infiltration of air will occur. For example, window and door openings on the side of a building that receives the prevailing winds allow the potential for higher air infiltration.

Ductwork throughout a building can be another source of energy waste. Heated air traveling through ducts to a conditioned space can leak out through air gaps in the ductwork. Heat in the warmed air can also be transferred to the air surrounding the duct. Similarly, cooled air absorbs heat as it flows through ductwork. Insulated ducts significantly reduce these energy losses. Insulation can be glued to the inside or the outside of the duct, **Figure 46-3**.

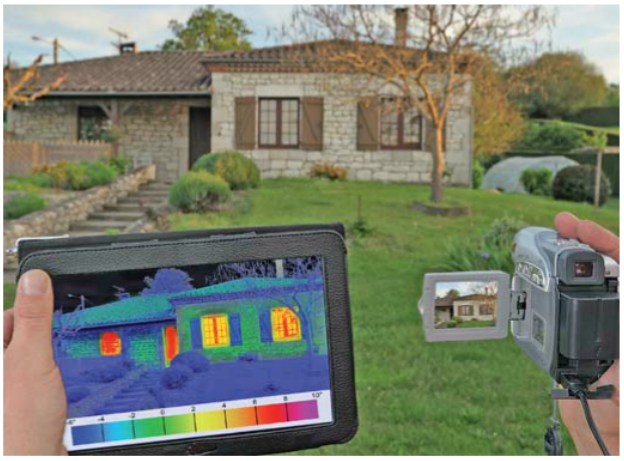

thieury/Shutterstock.com

Figure 46-2. Thermal imaging of this home reveals heat leaks (red and orange areas) around windows and doors.

Code Alert

Duct Insulation

Articles M1601.3 and M1601.4.5 of the International Residential Code (IRC) cover duct insulation material and installation in one- and two-family dwellings. Local building codes specify how ductwork and system piping is to be insulated. Codes may call for all ductwork in unconditioned spaces to be insulated.

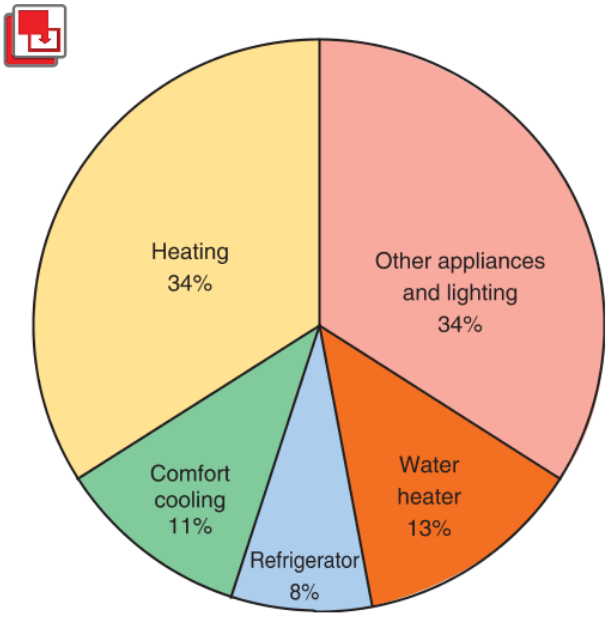

Adapted from the US Department of Energy—DOE

Figure 46-1. Pie diagram showing energy usage in a typical home. Heating and comfort cooling account for 45% (nearly half) of the total energy used.

Armacell LLC

Figure 46-3. Insulation is available in different shapes and sizes to be cut and formed around any place needed.

Copyright Goodheart-Willcox Co., Inc.

An HVAC technician should have a basic understanding of common construction practices. Typical house styles include single-floor type (ranch style), two-floor type (colonial style), and a combination of both (split-level style). Each style may be built over a basement, a crawl space, or a cement slab. Each type of structure requires careful consideration when installing or servicing an HVAC system. The materials used in construction must also be taken into consideration because they have significant effects on the heating and cooling of the structure.

46.1.1 Insulation and Vapor Barriers

A large number of different insulating materials have been developed for buildings. Insulation's primary purpose is to reduce heat loss. The insulation selected should have sufficient strength to support itself and not shrink or settle. It must not deteriorate in the presence of moisture, nor should it have any unpleasant odor. The insulation should be verminproof and fire-resistant.

Hygroscopic (moisture-absorbent) insulation must be properly sealed. This is particularly important in cooling applications. The insulation will lose much of its insulating value if it fills up with moisture. Aluminum sheet, plastic sheet, and tar paper are popular sealing materials. Even insulation not affected by moisture should be vapor sealed.

Vapor barriers should be installed in walls. These barriers reduce the transmission of water vapor through the walls, which helps prevent the formation of condensation in the insulation. Where vapor barriers are used, they should also be sealed as tightly as possible. The barriers may be made of tarred paper, aluminum foil, or plastic film. See **Figure 46-4**.

Aluminum foil has a reflection value as well as being a vapor-tight seal. Ideally, a hermetically sealed (airtight) insulation, such as extruded polystyrene, should be used in areas where dew point temperatures occur during the heating or cooling season or where moisture intrusion is a concern. See **Figure 46-5**.

Safety Note

Working with Insulation

Always wear long sleeves, safety glasses, and gloves when working with fiberglass or cellulose insulation. A dust mask is also required when working with loose fiberglass or cellulose insulation.

The type of insulation used depends, to some extent, on the method of application. Easy-flowing bulk insulation can be blown into the space between the studs of an existing building, as shown in **Figure 46-6**.

Sue Smith/Shutterstock.com

Figure 46-4. Plastic film vapor barrier on the walls of an attached garage.

Photo used with permission of Owens Corning. Copyright © Owens Corning Intellectual Capital. LLC.

Figure 46-5. Due to seepage and condensation concerns, extruded polystyrene is used to insulate this basement wall made of concrete block. Extruded polystyrene will not absorb water and lose its insulating properties like fiberglass insulation.

Photo used with permission of Owens Corning. Copyright © Owens Corning Intellectual Capital. LLC.

Figure 46-6. Easy-flowing bulk insulation being blown into an attic area.

12

Copyright Goodheart-Willcox Co., Inc.

Insulating foam board sheathing is commonly used on the exteriors of new construction. Batt fiberglass insulation is easy to install in new construction or in existing attic spaces. It comes in rolls and easily conforms to any irregularities in the construction. See **Figure 46-7**.

Insulating a new or existing building is one of the least expensive and easiest methods of conserving energy. Insulation is usually fiberglass or cellulose that is available in mat rolls, foam board, or loose fill. The ability of insulation to resist heat transfer is known as its R-value. A higher R-value indicates a greater resistance to heat transfer.

Photo used with permission of Owens Corning. Copyright © Owens Corning Intellectual Capital. LLC.

Figure 46-7. Flexible fiberglass roll, or batt, insulation being installed in an attic.

The amount of insulation required for a building depends on where the building is located. The US Department of Energy has developed guidelines for insulation based on climate zones. ***Climate zones*** are areas of land that are typically classified together based on common temperature ranges and yearly precipitation levels. **Figure 46-8** shows the various climate zones in the United States.

Different R-value insulation is used for specific areas of a building. These R-values are also based on climate zone. **Figure 46-9** lists the recommended R-value insulation to be used in each part of a building for each climate zone.

Modern wall construction techniques limit heat leakage and moisture passage through the wall structure. The foundation or basement walls should be protected with exterior foam board insulation and exterior sealing to prevent water intrusion. Exterior walls should be constructed of 2 × 6 framing to provide more room for insulation. Prefabricated walls that include ***structural insulated panels (SIPs)*** have a foam core between two layers of oriented strand

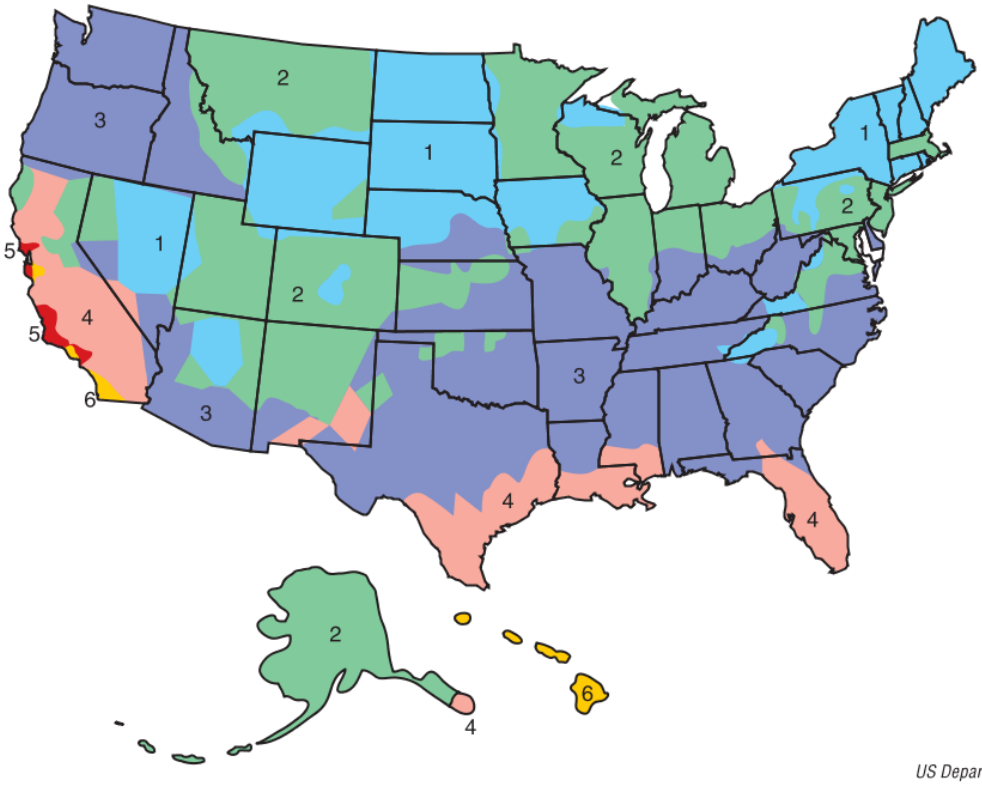

US Department of Energy—DOE

Figure 46-8. US Department of Energy climate zones.

Copyright Goodheart-Willcox Co., Inc.

Zone	Gas	Heat pump	Fuel oil	Electric furnace	Ceiling: Attic	Ceiling: Cathedral	Wall[A]	Floor	Crawl space[B]	Slab edge	Basement: Interior	Basement: Exterior
1	✔	✔	✔		R-49	R-38	R-18	R-25	R-19	R-8	R-11	R-10
1				✔	R-49	R-60	R-28	R-25	R-19	R-8	R-19	R-15
2	✔	✔	✔		R-49	R-38	R-18	R-25	R-19	R-8	R-11	R-10
2				✔	R-49	R-38	R-22	R-25	R-19	R-8	R-19	R-15
3	✔	✔	✔	✔	R-49	R-38	R-18	R-25	R-19	R-8	R-11	R-10
4	✔	✔	✔		R-38	R-38	R-13	R-13	R-19	R-4	R-11	R-4
4				✔	R-49	R-38	R-18	R-25	R-19	R-8	R-11	R-10
5	✔				R-38	R-30	R-13	R-11	R-13	R-4	R-11	R-4
5		✔	✔		R-38	R-38	R-13	R-13	R-19	R-4	R-11	R-4
5				✔	R-49	R-38	R-18	R-25	R-19	R-8	R-11	R-10
6	✔				R-22	R-22	R-11	R-11	R-11	(C)	R-11	R-4
6		✔	✔		R-38	R-30	R-13	R-11	R-13	R-4	R-11	R-4
6				✔	R-49	R-38	R-18	R-25	R-19	R-8	R-11	R-10

US Department of Energy—DOE

Figure 46-9. This table lists recommended R-value insulation for each climate zone in the United States of America.

board or plywood. The tightness of the structure can be increased by covering the exterior walls with foam board insulation and/or an exterior housewrap, as shown in **Figure 46-10**.

To create the tightest possible envelop, any breaks in the seal should be taped or tarred. Various methods and products are available to seal breaks in an envelope, **Figure 46-11**.

Housewrap

Extruded Polystyrene Insulating Sheathing

Goodheart-Willcox Publisher; Photo used with permission of Owens Corning. Copyright © 2011 Owens Corning Intellectual Capital. LLC.

Figure 46-10. Materials that prevent wind and moisture from entering a building.

Copyright Goodheart-Willcox Co., Inc.

Photo used with permission of Owens Corning. Copyright © 2011 Owens Corning Intellectual Capital. LLC.

Figure 46-11. Taping seams and tears in housewraps, vapor barriers, and insulating sheathing prevents leaks.

46.1.2 Roof Construction

Heat loss through the roof of a building is influenced by several factors, including the type of roof construction, ventilation, and insulation capability (R-value). Proper ventilation is important in the attic. Most attic areas are vented so that, in summer, cool air can come in through soffit vents. This air picks up heat and is exhausted through roof vents or ridge vents. Gable vents on each end of the building provide cross ventilation through the attic. See **Figure 46-12**. For more information on attic ventilation, see Chapter 29, *Air Distribution*.

The R-value of the roof also contributes to the energy efficiency of the building. The total R-value of a roof is the sum of the R-values of its individual components. For example, roof coverings (such as shingles or tiles) for pitched roofs are installed over sheathing, with insulation beneath the sheathing. The R-values of all of these items are added to find the total R-value for the roof.

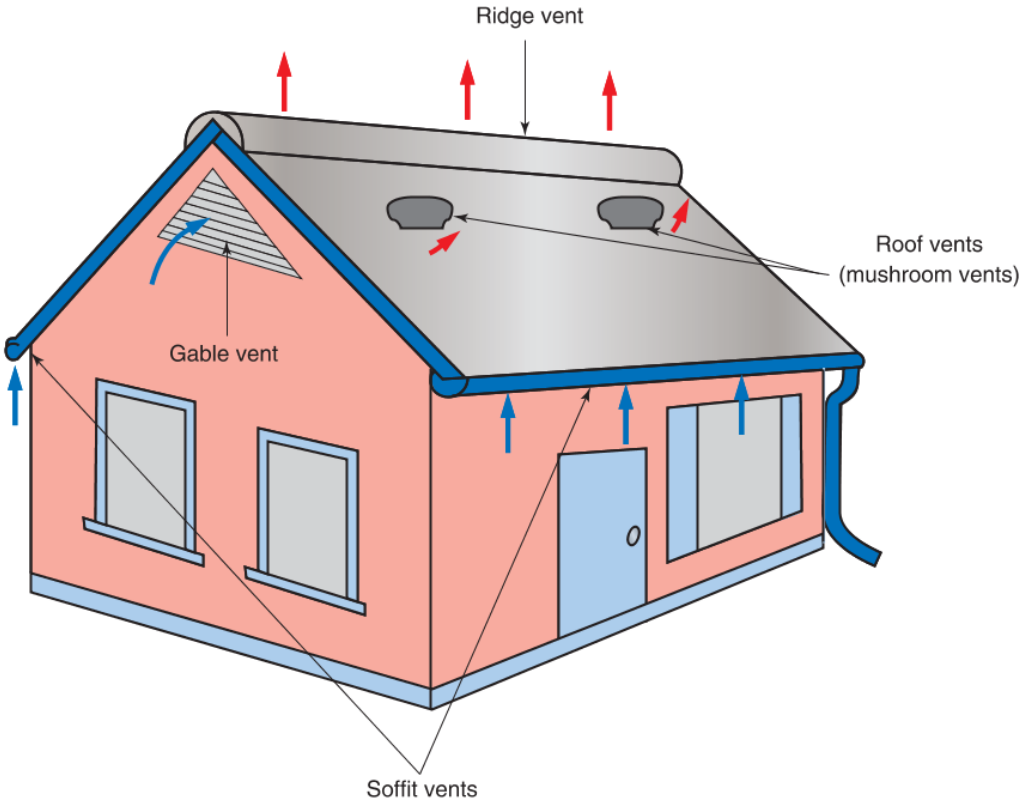

Goodheart-Willcox Publisher

Figure 46-12. Attic ventilation helps to keep the attic cool in summer, which means less cooling will be needed for the conditioned areas of the building. A second use of ventilation is to help keep snow from melting on top of the roof, running down, and freezing at the overhang. An ice dam at an overhang can force water under the shingles.

Copyright Goodheart-Willcox Co., Inc.

46.1.3 Commercial Construction

Small commercial buildings use many of the same construction practices and materials as the residential buildings discussed in this chapter. Foundations, wall and window construction, and roof design may be similar. Small offices or retail shops are examples of these types of buildings. Buildings for small industrial firms are typically constructed in the same way as other commercial buildings.

In many instances, low-rise shopping centers have replaced individually constructed shops. These buildings are now one of the largest consumers of air conditioning and refrigeration products. Most are made of concrete block on a concrete slab. Common walls between businesses may be made of concrete block (each with its own footing) or of wood-stud construction. Both allow for floor plan changes to suit the tenants.

Concrete block construction takes much longer to heat up or cool down than wood construction. A concrete wall acts as a thermal mass, which retains heat for a long period of time. Thermal mass is discussed more fully in Chapter 44, *Solar Power and Thermal Storage*.

In the summer, it is often more efficient to begin cooling a commercial concrete block building early in the morning, prior to tenant arrival. If the building is allowed to warm up, the HVAC system will need to cool the large concrete mass and the conditioned space, which may require more energy. In winter months, the concrete block holds in the heat for longer periods of time than wood construction does. The heating system may be shut down sooner during the day, as the concrete block will release its heat to the interior of the building for a longer time.

High-rise buildings and large industrial buildings are much more complex in their construction. In these cases, you should become familiar with the general building design. Study the blueprints prior to doing any major HVAC work involving the building's structure.

46.1.4 Energy-Efficient Construction

Building homes to be energy-efficient has become a priority in recent years. The US Department of Energy (DOE) has developed guidelines for building construction to increase energy efficiency. Buildings, appliances, and HVAC equipment that meet the requirements are labeled with the US Department of Energy's ***Energy Star*** label. Energy Star–rated buildings include the following features:

- Tight construction. Buildings should have minimal air gaps to minimize infiltration and transmission of conditioned air. Unnecessary heat leakage around doors and windows should be prevented by good sealing techniques.
- High-performance windows and doors. Windows should be designed to limit heat transfer and infiltration and transmission. Energy-efficient windows usually have multiple panes of glass with an inert gas between the panes. The inert gas, such as argon, minimizes heat transfer between the glass panes. See **Figure 46-13**. Windows may also have a low emissivity (low-e) coating to block ultraviolet light.
- Metal, foam-insulated doors should be used.
- Tight ducts. Ductwork should have minimal air gaps to prevent leakage.
- Improved insulation. Increased insulation should be used where possible, especially between roof and ceiling surfaces. The resulting increase in R-value is directly proportional to energy savings from reduced heat loss.
- Energy-efficient HVAC equipment. The building's heating and cooling systems should adequately heat and cool the building with minimum energy input.

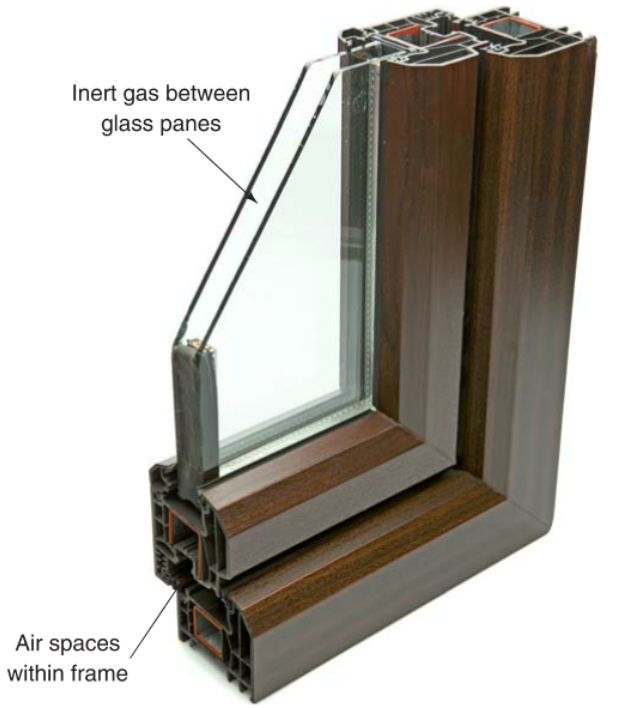

Onur ERSIN/Shutterstock.com

Figure 46-13. Cutaway view of an energy-efficient double-pane window. The frame is constructed of polyvinyl chloride (PVC) and has air spaces for insulation.

12

Copyright Goodheart-Willcox Co., Inc.

46.1.5 Determining Heating and Cooling Costs

Before suggesting changes to or replacement of an HVACR system in an existing building, it is wise to know the current cost to heat and cool the building. The degree-day method is a way of estimating fuel consumption and heating costs during the heating season and energy costs during the cooling season. This method uses previous weather records and readings during the current season to determine the average temperature of each day during the season.

The degree-day method uses 65°F (18°C) indoor and outdoor temperatures as benchmarks. A degree-day is the difference in the actual average (mean) temperature from the benchmarks. For example, suppose the average temperature outside is 15°F (–9°C). The temperature difference between the benchmark and actual temperature is 65°F – 15°F = 50°F. Therefore, that day would have 50 heating degree-days in Fahrenheit units.

Each heating degree-day requires a certain heat load to keep the inside temperature at 65°F (18°C). A certain heat load requires a certain amount of fuel to be used to produce that heat. The estimated fuel consumption per degree-day can be calculated by dividing the total fuel consumed by the number of degree-days. Knowing the number of degree-days since a fuel oil or LP tank was filled makes it possible to accurately calculate the amount of fuel left in the tank. Also, if the average number of degree-days for a heating season is known, the estimated heating cost for that season can be calculated.

The method of calculating cooling degree-days is similar. If the average (mean) outdoor temperature for a day is 85°F (29°C), the temperature difference between the day's average and the 65°F (18°C) benchmark is 20°F (11°C). Therefore, the day would have 20 cooling degree-days in Fahrenheit units. To estimate the energy used per cooling degree-day, simply divide the energy used during the season by the number of degree-days in the season.

As with any statistical average, the more data samples used to calculate the average, the more accurate it will be. In other words, using the degree-days and fuel or energy consumption for an entire season will yield a more accurate estimate than using data from a single week or even a month.

Pro Tip

Converting between Fahrenheit and Celsius Degree-Days

Occasionally, as when purchasing foreign-built equipment, it may be necessary to compare Fahrenheit and Celsius degree-days. Multiply Celsius degree-days by 1.8 to convert them to Fahrenheit degree-days. Multiply Fahrenheit degree days by 0.56 to convert them to Celsius degree-days.

46.2 HVAC Equipment Efficiency

The other factor that affects energy use is the efficiency of the existing HVAC equipment. In order to compare the efficiencies of different models of furnaces, boilers, heat pumps, and air conditioners, it is necessary to have a standardized method of calculating and expressing efficiency. Since each category of equipment relies on different operating principles and energy sources, different efficiency measurements have been developed for each category.

Code Alert

Equipment and System Sizing

Local building codes will often specify how heating and cooling systems are to be sized based on calculated heating and cooling loads. Typically, systems should have the minimum capacity required to meet the design load.

46.2.1 Furnaces and Boilers

Furnace and boiler efficiency is measured by the amount of fuel used to provide heat. The Department of Energy rating system for furnaces is the annual fuel utilization efficiency (AFUE) rating. This rating reflects the efficiency of the equipment (how efficiently it burns fuel) over an entire season. Older furnaces may have AFUE ratings as low as 55%. Energy Star–rated gas-fired furnaces must have an AFUE rating of 90% or higher for use in southern regions and 95% or higher in northern regions. Oil-fired furnaces must have an AFUE rating of 78% or higher, and oil-fired boilers must have an efficiency of at least 80%.

46.2.2 Air Conditioners

Air conditioners are rated in Btu or ton capacity. The efficiency of an air conditioner depends on how much electrical energy is required to provide the rated capacity of cooling.

Energy Efficiency Ratio

An air conditioner's ***energy efficiency ratio (EER)*** is a performance ratio that expresses a unit's cooling capacity in Btu/hr for each watt of power consumed.

Copyright Goodheart-Willcox Co., Inc.

This ratio is used to evaluate an air conditioner much the same as a miles per gallon (mpg) rating is used to evaluate the fuel efficiency of an automobile. The higher the value, the more efficient the machine.

The EER is calculated by dividing the cooling output in Btu/hr by the power input in watts. These numbers are generally listed on a system's condensing unit. EER is expressed in Btu/W-hr. The formula is:

$$\text{EER} = \frac{P_o}{P_i}$$

where

P_o = cooling output under test conditions (Btu/hr)

P_i = power input under test conditions (watts)

An EER rating is calculated under a specific set of operating conditions: an outdoor air temperature of 85°F (29.4°C), an indoor air temperature of 80°F (26.7°C), and an indoor relative humidity of 50%. However, an air conditioner's cooling capability varies with outdoor temperature. As the outdoor temperature increases, the air conditioner must run for a longer time to achieve the same cooling effect. As a result, the EER rating is accurate only for the specific operating conditions under which it was measured.

Seasonal Energy Efficiency Ratio

The ***seasonal energy efficiency ratio (SEER)*** rating is similar to the EER rating, but SEER estimates the average efficiency of an air conditioner throughout the entire cooling season. It is used to describe the efficiency of refrigeration and air conditioning units sold for household use in the United States. The SEER rating is the total estimated cooling accomplished by a unit during its normal annual usage, divided by the total estimated electric energy input in watt-hours during this time.

When a unit starts, it draws locked rotor amps. Therefore, more power is consumed when the unit starts than when it is fully operational. The more frequent the cycles, the more power is used. The SEER wattage is adjusted to include the average number of starting and running cycles.

Improved energy efficiency has been mandated by the governments of the US and European Union. All new air conditioners must achieve a SEER rating of 13. Older units may have a SEER rating as low as 6. To qualify for an Energy Star rating, air conditioners must have a SEER of 15 or higher. The use of variable speed compressors, variable speed blower motors, newer refrigerant blends, and the increased use of automatic control systems have allowed systems to achieve SEER ratings higher than 20. **Figure 46-14** illustrates the data for a model with a SEER of 16.

H4TS 16 SEER Models Technical Data

PHYSICAL AND ELECTRICAL DATA

MODEL		H4TS024	H4TS030	H4TS036	H4TS048	H4TS060
UNIT SUPPLY VOLTAGE		208/230-1-60				
NORMAL VOLTAGE RANGE [1]		187 to 252				
MIN. CIRCUIT AMPACITY		13.4	15.3	18.6	TBD	TBD
MAX. OVERCURRENT DEVICE AMPS [2]		20	25	30	TBD	TBD
COMPRESSOR TYPE		BRISTOL TS				
COMPRESSOR AMPS	RATED LOAD	10.3	11.7	13.5	TBD	TBD
	LOCKED ROTOR	64	65	84	TBD	TBD
CRANKCASE HEATER		YES	YES	YES	TBD	TBD
FAN MOTOR AMPS	RATED LOAD	.5	.5	.7	TBD	TBD
FAN DIAMETER INCHES		18	18	24	TBD	TBD
FAN MOTOR	RATED HP	1/12	1/12	1/10	TBD	TBD
	NOMINAL RPM	1100	1100	825	TBD	TBD
	NOMINAL CFM	1850	1850	2800	TBD	TBD
COIL	FACE AREA SQ. FT.	14.2	14.2	20	TBD	TBD
	ROWS DEEP	1	1	1	TBD	TBD
	FIN / INCH	20	20	20	TBD	TBD
LIQUID LINE OD		3/8	3/8	3/8	TBD	TBD
VAPOR LINE OD		3/4	3/4	3/4	TBD	TBD
UNIT CHARGE, (LBS - OZ)[3]		6 - 0	6 - 9	7 - 0	TBD	TBD
CHARGE PER FOOT, OZ		.68	.68	.70	TBD	TBD
OPERATING WEIGHT LBS.					TBD	TBD

[1] Utilization range "A" in accordance with ARI standard 110.
[2] Dual element fuses or HACR circuit breaker.
[3] The Unit Charge is correct for the outdoor unit, matched indoor coil and 15 feet of refrigerant tubing. For tubing lengths other than 15 feet, add or subtract the amount of refrigerant calculated, using the difference in length multiplied by the per foot value.

York International Corporation, Unitary Products Group

Figure 46-14. Unit label indicating capacity and efficiency must be carried by all air conditioning and refrigeration units.

Copyright Goodheart-Willcox Co., Inc.

The formula for calculating a SEER is:

$$\text{SEER} = \frac{Q_c}{P}$$

where

Q_c = Sum of all cooling outputs under all test conditions (Btu/hr)

P = Sum of all power inputs under all test conditions (W)

Pro Tip

SEER System Ratings

It is important to remember that all parts of a system contribute to a given SEER rating. If you replace a customer's condensing unit, the system may not be able to perform at the SEER rating given to that condensing unit. The condensing unit was given its SEER rating based on use with an evaporator of a certain size. If an evaporator is not replaced with the one specifically designed for the new condensing unit, the system probably will not be able to perform at its SEER rating. Connecting parts of a system based only on their nominal rating will not guarantee SEER rating performance.

Coefficient of Performance

A ***coefficient of performance (COP)*** is similar to an EER in that it is used to express the heating or cooling effect per energy input under specific operating conditions. However, in calculating a COP, the heating or cooling output and the power input are both converted to the same units before the calculation is made. As a result, the units cancel out. Therefore, a COP rating has no units associated with it.

$$\text{COP} = \frac{E_o}{E_i}$$

where

E_o = Energy output under test conditions (Btu)

E_i = Energy input under test conditions (Btu)

A COP is typically a snapshot of the system's efficiency, like an EER. However, a COP can also be used to describe the average efficiency of the system throughout a heating or cooling season. This is commonly referred to as a ***seasonal average COP***.

$$\text{Seasonal Average COP} = \frac{E_{so}}{E_{si}}$$

where

E_{so} = Total energy output for season under all conditions (Btu)

E_{si} = Total energy input for season under all conditions (Btu)

46.2.3 Heat Pumps

The efficiency of a heat pump's cooling cycle can be measured using the same efficiency ratings used for an air conditioner (COP, EER, or SEER). However, the efficiency of a heat pump's heating cycle must be measured using a coefficient of performance (COP) or a heating seasonal performance factor (HSPF). A ***heating seasonal performance factor (HSPF)*** is a measurement of how efficiently a heat pump works throughout the heating season. Whereas a heat pump's COP is a snapshot of how efficient the heat pump is under a specific set of operating conditions, the HSPF gives the consumer a better idea of how efficient the heat pump is under varying operating conditions. The relationship between a COP and an HSPF is very similar to the relationship between an EER and a SEER. An HSPF is calculated as follows:

$$\text{HSPF} = \frac{Q_h}{P}$$

where

Q_h = Sum of all cooling outputs under all test conditions (Btu/hr)

P = Sum of all power inputs under all test conditions (W)

46.3 HVAC Alternatives for Energy Conservation

Because HVAC systems account for such a large portion of energy use and utility costs, various methods of improving their efficiency have emerged. Through the use of new refrigerants, energy-efficient motors, and system balancing, the HVAC industry is continually improving the efficiency of systems and buildings.

New, energy-efficient systems are a good alternative for new construction, but facility managers in existing buildings have to consider whether installing an entirely new system is more cost-effective than revamping the existing system. Even if the new system is considerably more efficient to run, they calculate how long it would take to recoup the initial expense of a new system.

The first step toward saving energy should therefore be to take a close look at the existing system. A formal energy audit should be performed, as described in Chapter 45, *Energy Management*. The audit may identify several low-cost opportunities for saving energy, such as improving duct insulation in certain areas and fixing detected air leaks. Resolving these performance

Copyright Goodheart-Willcox Co., Inc.

issues may result in a surprising increase in energy efficiency.

Code Alert

Equipment Performance Requirements

Local building codes may specify a minimum efficiency requirement for new and replacement equipment. If the components of a system are designed to work together, the efficiency rating for the system is typically available from the manufacturer. If separate components from different manufacturers are assembled on site, the system designer may need to provide calculations proving their combined efficiency.

46.3.1 Energy-Saving Components

After all of the obvious performance issues have been addressed, the next step may be to determine whether updating specific parts of the system (rather than replacing the entire system) would result in a significant reduction of energy use. Some components require only minimal installation cost, while others are more labor-intensive.

Programmable Thermostats

Possibly the easiest component to change in an existing system is the thermostat. Both residential and business customers can benefit immediately by replacing older thermostats with programmable thermostats. Programmable thermostats are discussed in greater detail in Chapter 36, *Thermostats*.

Variable Speed Motors and Variable Frequency Drives

Replacing older compressors with compressors that can operate at variable speeds can result in greater equipment efficiency and lower electrical costs. A variable speed motor is one in which the output speed can be changed based on need or other external factors.

Variable frequency drives can also be installed in certain applications to help save energy. A variable frequency drive varies the frequency and voltage of a motor to control motor speed and torque. For example, variable frequency drives can be added to pumps to intelligently adjust their motor speeds. Some larger fan motors on older HVAC units can be fitted with variable frequency drives to adjust airflow. Smaller fan motors might be replaced with an ECM (electronically commutated motor).

Heat Exchangers

In traditional HVAC systems, a large amount of energy is wasted when conditioned air is simply exhausted to the outside of the building. This energy can be recaptured and conserved with the proper equipment. Heat recovery ventilators (HRVs) and energy recovery ventilators (ERVs) are air-to-air heat exchangers. The heat of outgoing conditioned air is passed to incoming unconditioned air. This brings unconditioned air closer to indoor temperature, meaning that it will require less conditioning and less energy expended by the HVAC system.

Heat recovery ventilators (HRVs) and energy recovery ventilators (ERVs) improve system efficiency by adjusting the temperature of incoming air and conserving the energy already used in conditioning the air. These air-to-air heat exchangers are discussed in Chapter 29, *Air Quality*.

Thinking Green

Outdoor Ventilation and Heat Reclamation

Although outdoor air can be brought in to improve indoor air quality, this approach can result in considerable energy waste. The use of heat recovery ventilators (HRVs) and energy recovery ventilators (ERVs) can reduce the waste by 60%–80%.

Another type of heat exchanger is the refrigerant-to-water heat exchanger. This type can be used in domestic hot water systems in residential settings to heat the water using waste heat from an air conditioning system or heat pump. If a heat pump is used, this system can provide hot water year-round. If an air conditioner is used, the water is heated only when the air conditioner is running.

Solar Products

In residential applications, the addition of a solar water heater or solar pool or spa heater can result in significant energy savings. Also, some air-conditioning equipment is designed to be powered by the energy produced by solar photovoltaic (PV) systems. These different systems are described in more detail in Chapter 44, *Solar Power and Thermal Storage*.

Building Control Systems

As described in Chapter 45, *Energy Management*, an existing HVAC system can be integrated into an automated building control system. The building control system reduces energy costs by integrating the HVAC system with other building systems so that all of the systems run at top efficiency.

Methods of Subcooling

One method of increasing a mechanical HVAC system's capacity and energy efficiency is to increase its subcooling. This is especially beneficial when outdoor ambient temperature is high. Higher ambient

Copyright Goodheart-Willcox Co., Inc.

temperature requires a mechanical HVAC system to work harder to displace heat outdoors. The harder a system must work, the more energy it must expend in operation.

An air-cooled condenser must raise head pressure to a level that corresponds with a high-side refrigerant temperature that is a certain number of degrees hotter than ambient air. Remember that a temperature difference is necessary for heat displacement. Therefore, high-side refrigerant must be hotter than ambient temperature to displace heat into outdoor air. The hotter ambient temperature is, the higher the corresponding head pressure must be. The higher the head pressure, the more amps the compressor must pull to create the high pressure. The more amps, the more the electrical power consumed during operation. The change of one variable can create a chain reaction affecting other variables, **Figure 46-15**.

There are two primary factors to change when trying to increase subcooling. These are as follows:

- Increasing the amount of heat displaced from the refrigerant on the high side.
- Decreasing the amount of electrical power used to operate the HVAC system.

Often, these two factors can go hand in hand. There are several different methods of increasing subcooling in a mechanical HVAC system. A simple preventive method of doing this is to block the condenser from the rays of the sun. The sun transmits a tremendous amount of heat energy, and sunlight on a condensing unit is adding to the heat load. A source of shade, such as a sun barrier or a tree can help reduce the initial heat load of a system. This can help keep subcooling lower and save energy; however, adequate airflow must still be ensured for proper system operation.

Another method of increasing subcooling is to use a suction line-liquid line heat exchanger. There are different builds available for these devices. A common example is a tube-within-a-tube construction. These allow the cool suction gas of the low side and the warm liquid of the high side to exchange heat. The cooler the liquid going to the evaporator, the greater its cooling effect.

Evaporative or water cooling is another effective method of increasing subcooling. Remember that water can absorb more heat than air. In such a system, water vapor is sprayed into the condenser airways, where it evaporates and increases the amount of heat removed from the high-side refrigerant. Home kits are available using flexible tubing, nozzles, and a water pump, **Figure 46-16**.

Malcolm Prather

Figure 46-16. When this residential condensing unit cycles on, a water pump pressurizes the water line to create an envelope of mist that is drawn in through the sides of the unit. The water droplets increase the amount of heat absorbed from the refrigerant and decrease its temperature, increasing subcooling and system performance.

Chain Reaction of Factors Affecting Efficiency		
Factors	**Ambient Temperature Rise**	**Ambient Temperature Drop**
High-Side Temperature	Increases	Decreases
High-Side Pressure	Increases	Decreases
Compressor Current Draw	Increases	Decreases
Electrical Power Usage	Increases	Decreases

Goodheart-Willcox Publisher

Figure 46-15. The change of one variable in an HVAC system can cause a chain reaction. Variables associated with subcooling and HVAC system efficiency are shown here.

Copyright Goodheart-Willcox Co., Inc.

46.3.2 Total Energy Systems

Recently, many large buildings have been constructed using "total energy" or "single energy" systems. In a ***total energy system***, all of the energy-using devices are designed to capture and use all or most of the so-called "waste" energy and by-products of combustion. Heat energy that was formerly considered waste is used to generate power. In other words, the system generates both heat and electricity in the building. Systems that produce both heat and electricity are also known as *combined heat and power (CHP)* or *cogeneration* systems. These concepts were first introduced in Chapter 34, *Absorption and Evaporative Cooling Systems*.

For example, instead of depending on the electric utility to provide both electricity and gas to a building, the building is supplied with natural gas only. The combined heat and power unit burns this fuel to produce both heat for the building and to run an electric generator to produce electricity on site.

Advantages of a total energy system include the following:

- Increased energy efficiency.
- Reduced air pollution.
- Lower utility costs.
- Reduced demand on the utility grid.

Electricity is generated using a reciprocating gas engine, gas turbine, or steam turbine. The engines drive electric generators in the building. While running, these engines produce heat that must be displaced. Water is often used to cool the engine and capture this heat, which would otherwise be wasted. Once captured, the heat can be put to another use.

Engine exhaust gas is another major heat source. A gas engine or turbine uses about 33% of its fuel energy to generate electricity. Another 30% produces heat that ends up in the water-cooling jacket. About 30% produces heat that is released in the exhaust gases. The remaining 7% produces heat that warms the lubricating oil or is lost by radiation.

Heat from the cooling jacket water, exhaust gases, and hot lubricating oil can be converted to useful purposes:

- Absorption systems often use the exhaust heat to operate air conditioning (comfort cooling).
- Exhaust heat from turbines may be used to raise the temperature of water in a hydronic heating system during the heating season.
- Heat from the water jacket can be used to furnish nonpotable hot water or with a heat exchanger to heat potable water.

A total energy system may include other aspects as well. For example, heat from the return air ducts of the heating system can be released through channels in lighting fixtures. As the cool return air passes across the lighted fixtures, the air is heated. The needed heat for that room is then supplied through a duct. The surplus heat from the lights is passed back to the primary duct system, where it can be directed for use wherever it is needed in the building.

Total energy systems are gaining in acceptance as companies and utilities strive to lessen their impact on the environment and to reduce cost. The principle has also been applied to more than just wasted heat energy. For example, large industrial plants may perform operations that generate large amounts of waste products, such as waste heat from manufacturing processes or wood chips from paper mills. In the past, these were considered necessary wastes and were disposed of. Total energy systems improve energy efficiency by using these wastes to generate useful energy, such as electricity, comfort heating, or process heating.

46.3.3 Evaporative Cooling Designs

If warm, dry air is moved rapidly over water at the same temperature, some of the water evaporates. When the water molecules evaporate, they absorb heat energy from the surrounding molecules, causing the temperature of the remaining liquid water to drop. When this natural cooling process is used to cool a space or objects, it is referred to as evaporative cooling. This cooling method is used primarily in climates with high ambient air temperatures and low relative humidity. In dry climates, evaporative cooling is both effective and practical. Evaporative cooling and roof mist cooling systems are discussed in greater detail in Chapter 34, *Absorption and Evaporative Cooling Systems*.

Ponded Roofs

In some parts of the world, buildings are provided with some summer comfort cooling by ponded roofs. A ***ponded roof*** is a flat roof that maintains 2" to 3" (5 cm to 8 cm) of standing water, which absorbs heat from the sun and dissipates that heat through evaporation. This type of cooling is well suited to commercial one-story factory and market buildings that are constructed to be able to handle the additional weight of a ponded roof. To be effective, the roof area should be as large as the floor area.

The cooling effect comes from the evaporation of water from the roof. Naturally, ponded systems are most effective in areas that have a high temperature, low relative humidity, and bright sunshine. By ponding, roof temperature may be kept below that of the surrounding atmosphere.

Ponded roofs require a means of maintaining a constant level of water on the roof. This is accomplished

Copyright Goodheart-Willcox Co., Inc.

by placing the roof gutter drains at the correct height to maintain an adequate water depth on the roof. Once the water reaches this height, excess water drains from the roof. Drains are needed to take away excess water due to rain. If the roof is large, wave breakers are installed to prevent waves from forming under high winds. The waves could cause a large quantity of water to be blown off the roof edge.

A ponded roof may reduce the required air conditioning capacity by as much as 30%. However, the added weight on the roof results in higher construction costs. A ponded roof should never be added to an existing building unless the roof structure can support the additional weight of the water.

Code Alert

Evaporative Cooling

Local building codes regulate the installation of ponded roof, roof misting, and other evaporative cooling systems. The codes specify details such as acceptable roof grade, proper flashing techniques and material, proper drainage, and acceptable methods of potable water backflow prevention.

46.4 The Role of the HVACR Technician

The majority of this chapter discusses building and HVAC efficiency and provides ideas for energy conservation in general. Many of the decisions regarding building construction and HVAC specifications are not within the scope of the HVACR technician. However, there are several things technicians can do to help customers achieve better energy efficiency.

46.4.1 Know and Explain the Options

As fuel costs continue to rise and as people become more concerned about the effect of fossil-burning fuels on the environment, opportunities to educate customers increase. During routine maintenance and service calls, it is not uncommon for a building owner, manager, or resident to ask questions about the current HVAC system and to ask for suggestions for improvements in energy efficiency. A technician who keeps up with current technologies and best practices can discuss options for improvement based on the customer's specific system.

Many people believe that the cost of switching to a more energy-efficient HVAC system is beyond their financial means. The technician can help in these cases by explaining current financial incentives from the government and other sources. In addition, the technician may be able to suggest small alterations in the customer's current system that will make the system more energy-efficient, as described earlier in the chapter.

46.4.2 Perform Proper Installation and Maintenance

Even the most efficient system will not conserve energy if it is improperly installed. Be sure to follow the manufacturer's recommended installation procedure for each system carefully.

For customers who cannot afford or do not want to purchase an entirely new system, one of the most effective methods for conserving energy is to perform proper preventive maintenance. Tips for careful system maintenance include:

- Check for leaks at every service call.
- Check for acid and water in the refrigerant at every service call.
- Explain EPA Clean Air Act requirements to equipment owners as necessary to help them comply.
- Clean heat exchanger coils (evaporator and condenser).
- Maintain clean, unobstructed airways (at the air handler and the condenser).

By checking a system routinely, the technician can often find and fix problems before they become major. Not only does this help prevent potential pollution, it may also prevent expensive equipment (or refrigerant) replacement.

Copyright Goodheart-Willcox Co., Inc.

Chapter Review

Summary

- The energy efficiency of a building is directly impacted by its construction and materials, including insulation as well as roof and wall construction.
- A building's fuel or energy consumption per degree-day can be estimated by dividing the fuel or energy consumption by the number of degree-days. This estimated fuel consumption rate can then be used to determine fuel remaining in a tank or to project the heating or cooling cost for the season.
- Annual fuel utilization efficiency (AFUE) rating is the ratio of fuel burned to heat provided. Various ratings are used to evaluate the efficiency of HVAC equipment. AFUE is used to measure the efficiency of furnaces and boilers. EER, SEER, and COP are used to evaluate air conditioners and the cooling cycles of heat pumps. HSPF measures the efficiency of a heat pump's heating cycle.
- Energy-saving components such as programmable thermostats, variable speed motors and variable frequency drives, heat exchangers, various solar products, and subcoolers can be added to existing systems to increase their efficiency. Integrating an HVAC system into a building control system to manage operation can also increase efficiency.
- Total energy systems can be designed for use as combined heat and power (CHP) or cogeneration systems, making use of all the energy created in its different forms. This can increase energy efficiency, reduce air pollution, reduce utility costs, and reduce demand on the electrical grid.
- Although the HVAC technician usually has no direct control over system specification, the technician can contribute to energy conservation by explaining alternatives to customers when asked, installing and maintaining systems properly, and conserving refrigerant as best as possible.

Review Questions

Answer the following questions using the information in this chapter.

1. The US Department of Energy's _____ label may be used to identify buildings, appliances, or HVAC equipment that meets certain efficiency requirements.
   A. Big E
   B. Earth Saver
   C. Energy Star
   D. Tree Hugger
2. The degree-days method of determining heating and cooling costs is based on _____ as a temperature benchmark.
   A. 45°F
   B. 65°F
   C. 85°F
   D. 95°F
3. Which energy efficiency rating is used to measure the efficiency of boilers?
   A. AFUE.
   B. COP.
   C. HSPF.
   D. SEER.
4. Which of the following efficiency ratios may be used to describe the efficiency of an air conditioner?
   A. AFUE, COP, EER.
   B. AFUE, HSPF, SEER.
   C. COP, EER, SEER.
   D. COP, HSPF, SEER.
5. Under what conditions is an EER rating calculated?
   A. 65°F outdoor temperature and 70°F indoor temperature at 80% relative humidity.
   B. 75°F outdoor temperature and 75°F indoor temperature at 40% relative humidity.
   C. 85°F outdoor temperature and 80°F indoor temperature at 50% relative humidity.
   D. 90°F outdoor temperature and 75°F indoor temperature at 60% relative humidity.
6. The difference between the EER and the SEER is that _____.
   A. SEER can be used to rate furnaces and boilers
   B. SEER estimates average efficiency throughout the entire season
   C. SEER is less accurate than EER
   D. SEER units are all converted to Btu before the calculation is made

Copyright Goodheart-Willcox Co., Inc.

7. Which of the following statements is true about the coefficient of performance ratio?
   A. It can be used to rate the heating efficiency of a heat pump.
   B. It has no units associated with it because the units cancel out.
   C. It is calculated by dividing output in Btu/hr by input in watts.
   D. It reflects how efficiently a furnace operates over an entire season.
8. The first step toward changing a building's HVAC system to increase energy efficiency is to _____.
   A. add random energy-efficient components if they are already in the truck
   B. evaluate the existing system
   C. install a building control system
   D. install a completely new energy-efficient system
9. The key feature of total energy systems is the _____.
   A. generating of all of its own power without any energy input
   B. use of a chemical process to generate electricity
   C. use of nuclear fusion to produce heat
   D. use of waste heat to perform a useful function
10. One of the most effective ways a technician can help a customer reduce energy costs is to _____.
   A. encourage the customer to replace the entire system
   B. perform proper preventive maintenance
   C. report the customer's energy needs to a supervisor
   D. talk trash about their old system

Copyright Goodheart-Willcox Co., Inc.

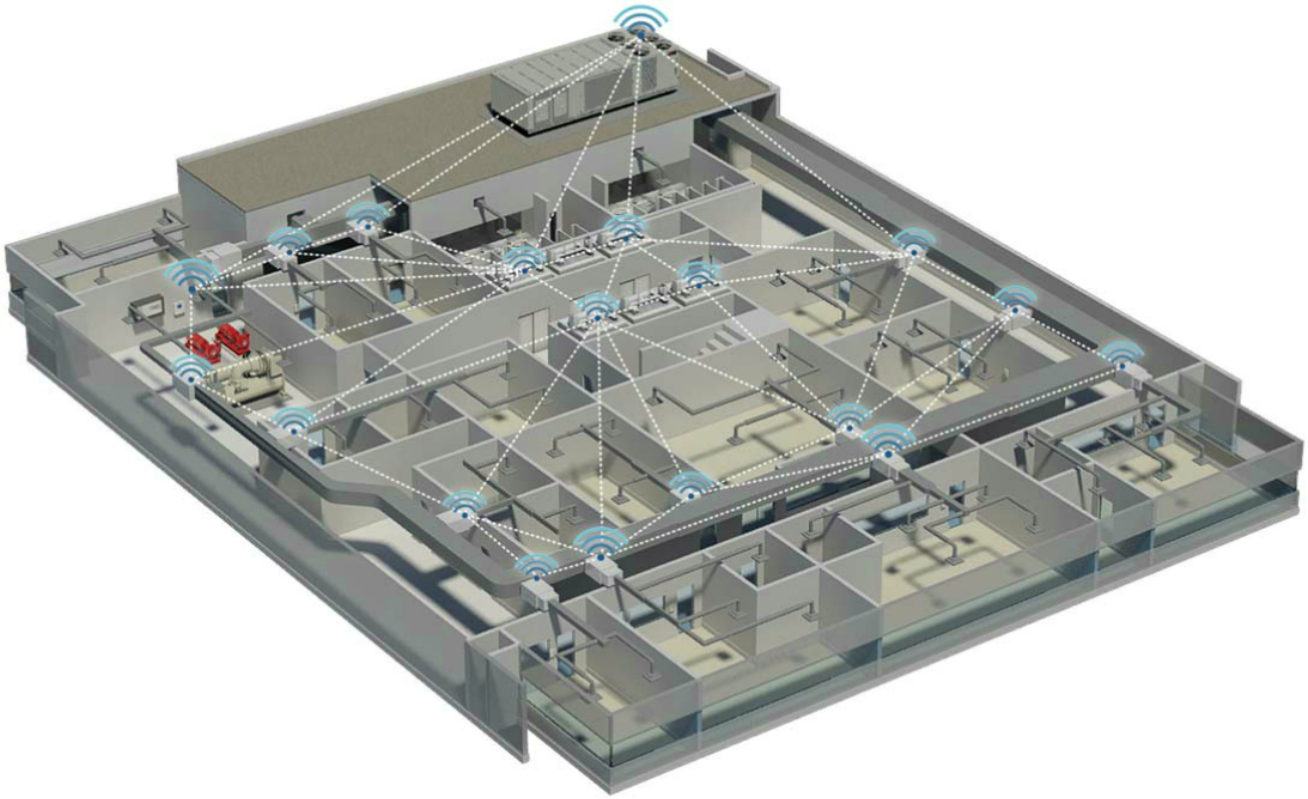

Photo courtesy of Trane, a brand of Ingersoll Rand

Variable airflow, variable refrigerant flow, zoning options, wireless controls, and integrated building management systems work together to maximize a building's energy conservation.

Copyright Goodheart-Willcox Co., Inc.

CHAPTER 47 Overview of Commercial Refrigeration Systems

Chapter Outline

47.1 Applications
- 47.1.1 Bakeries
- 47.1.2 Supermarkets
- 47.1.3 Other Applications

47.2 Commercial Refrigeration Systems
- 47.2.1 Commercial Cabinet Construction
- 47.2.2 Walk-In Cabinets
- 47.2.3 Florist Cabinets
- 47.2.4 Hot and Cold Merchandisers
- 47.2.5 Display Cases
- 47.2.6 Quick Chillers and Blast Chillers/Freezers
- 47.2.7 Refrigerated Dispensers
- 47.2.8 Milk Coolers
- 47.2.9 Ice Machines

47.3 Industrial Applications
- 47.3.1 Industrial Processes
- 47.3.2 Industrial Freezing of Foods

Learning Objectives

Information in this chapter will enable you to:

- Recognize the various types of commercial refrigeration systems and their applications.
- Explain how and why ice banks are used in certain refrigeration systems.
- Explain how and why air curtains are used in commercial refrigeration systems.
- Explain how quick chillers and blast chillers differ from other commercial refrigeration systems.
- Describe the two types of water coolers.
- Describe the different types of evaporators found in commercial ice machines.
- List some of the industrial applications of refrigeration systems.

Technical Terms

blast chiller
blast freezer
cryogenic food freezing
dispensing freezer
distributed system
hot and cold merchandiser
ice bank
ice machine
locker plant
milk cooler
parallel compressor rack
passively chilled beverage dispenser
pressure dew point
processing plant
quick chiller
self-contained water cooler
tap water cooler
ultraviolet lamp
walk-in cabinet
water cooler

Review of Key Concepts

Reviewing these concepts from earlier chapters will help you understand new concepts presented in this chapter:

- Refrigerating or freezing food helps preserve freshness and product integrity. (Chapter 23)
- Refrigerating systems for food preservation use not only compressors, condensers, metering devices, and evaporators but also different heat exchangers, dampers, and defrost and condensation controls. (Chapter 24)
- Gay-Lussac's law states that at constant volume, the absolute pressure of a given quantity of a gas varies directly with its absolute temperature. In other words, when a gas is held at a constant volume, its pressure and temperature will rise together or will fall together. (Chapter 5)
- Many large food processing plants use cryogenic fluids, such as liquid nitrogen or carbon dioxide, to rapidly freeze foods. These liquid refrigerants range in temperature from –250°F (–157°C) to nearly absolute zero (–460°F or –273°C), which is the cryogenic range. Common cryogenic fluids are R-702 (hydrogen), R-704 (helium), R-720 (neon), R-728 (nitrogen), R-729 (air), R-732 (oxygen), and R-740 (argon). (Chapter 9)

Introduction

Commercial refrigeration systems vary greatly to meet their different applications. Many are high-capacity systems with aluminum and stainless steel cabinets for greater durability and ease of maintenance. Commercial refrigeration systems may also use multiple compressors, condensing units with multiple fans and flow controls, and specialized evaporators. Examples of commercial systems include supermarket refrigeration units, food display cases, refrigerated beverage and ice cream dispensers, and ice machines.

Videos

- Commercial Refrigeration
- Parallel Compressor Racks

47.1 Applications

Commercial refrigeration systems can be found in many types of businesses. Since refrigeration systems can be designed to achieve and maintain a variety of temperature ranges at different rates and efficiencies, they have been incorporated into the day-to-day work of numerous commercial operations.

47.1.1 Bakeries

Many raw products used by bakeries must be refrigerated to preserve or improve quality. Bakeries must refrigerate perishable raw materials, perishables during interrupted processing, and finished products, **Figure 47-1**.

Frozen ingredients must be stored. Even water and flour used for bread making require cooling during certain periods of the year. Health codes require these practices. Creams and custards can last longer when at a cool temperature.

Traulsen Refrigeration

Figure 47-1. This type of refrigerated cabinet can easily be used in bakery applications. It has a top-mounted condensing unit.

Both medium-temperature and low-temperature refrigeration is used. Normal refrigeration is suitable for butter, eggs, coconut, cream, fat, meat, margarine, nuts, and yeast and also for dough retardation (controlling length and strength of fermentation). Low-temperature systems are needed to freeze baked goods that are sold frozen. For example, bread that is fast-frozen to –1°F (–18°C) will remain fresh for almost a month.

Controlled temperature and humidity are important in many baking processes. Therefore, air-conditioning equipment is also used in bakeries.

47.1.2 Supermarkets

In the United States, the FDA Food Code and its supplements set requirements for food storage equipment, whether in bars, restaurants, grocery stores, or wholesale distribution warehouses. It is important that the food temperature be at or below 41°F (5°C) at all times. As equipment has become more efficient, operating temperatures for discharge and return air have risen. For example, for reach-in merchandisers manufactured in 2010, the evaporator air temperature was 27°F (–2.8°C), and the discharge air temperature was 32°F (0°C). By comparison, for reach-in merchandisers manufactured in 1990, the evaporator air temperature was 23°F (–5°C), and the discharge air temperature was 30°F (–1.1°C).

A supermarket will have a mix of reach-in displays with different arrangements and multiple decks. These units will refrigerate dairy, produce, fresh meat, salads, and delicatessen meats and cheeses. A supermarket reach-in case may have multiple doors. Doors and door frames are chosen separately from the case. A door is typically 30″ × 67″ for standard height or 30″ × 75″ for tall cases, **Figure 47-2**.

The location of the coolers, freezers, reach-ins, and other types of refrigeration units will vary with each supermarket installation. The layout of the store factors into what type of unit may be used. The condensing unit may be split from the cooling cabinet and located remotely, or the condensing unit may be packaged with the rest of the refrigeration system. When packaged as a single unit, the condensing portion of a system is usually located in the top or the base of the cabinet. A forced-draft evaporator installed inside the cabinet connects to a forced-draft condenser outside the cabinet. Larger installations may use multiple condensing units. These condensing units may be located on top or in the back of the unit, in a separate area of the building, or outside the supermarket on a pad or on top of the roof, **Figure 47-3**.

Copyright Goodheart-Willcox Co., Inc.

REMIS AMERICA, LLC

Figure 47-2. Supermarkets frequently connect several display cases in a row to form aisles.

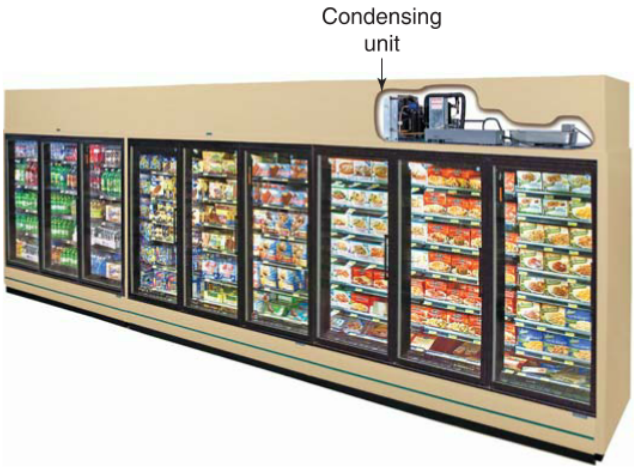

A

B

Zero Zone, Inc.

Figure 47-3. A—Large display case with a condensing unit mounted on top and out of sight of customers. B—Top-mounted condensing unit.

A ***parallel compressor rack*** is an arrangement of compressors piped in parallel with a common suction line, a common liquid line, and a common liquid receiver. It is the central part of a multiple-compressor refrigeration system. **Figure 47-4** shows a parallel compressor rack with four compressors piped in parallel.

Each display case connected to a parallel compressor rack has its own evaporator and refrigerant metering device. The unit shown uses a microprocessor control system to operate the units for maximum efficiency. The compressors may all run at the same time for high-load conditions or be cycled to provide refrigeration during low-load conditions.

Parallel compressor racks are often located away from the display cases and refrigerated spaces to which they connect. Often these compressors and equipment are located in a machine room in the back of the store or on the roof. The machine room may include multiple condensing units that were provided prewired and piped. Machine rooms are designed with their own ventilation, lighting, energy management, and electrical systems. The compressors and condensers are piped and wired to the various food display cases and walk-in coolers located inside the supermarket, **Figure 47-5**.

Another option is to install equipment as close as practical to the refrigerated cabinets. The compressors can be placed near the conditioned spaces, such as at the end of an aisle of display cases in a supermarket. A ***distributed system*** is a unit containing multiple compressors that circulate refrigerant through the evaporators in a nearby conditioned space, such as reach-in coolers or display cases. A distributed system typically contains only compressors and their controls. A distributed system is usually connected to a remote condenser located elsewhere. This remote condenser is often an air-cooled unit directly above on the rooftop. In some cases, a distributed system may contain a water-cooled condenser.

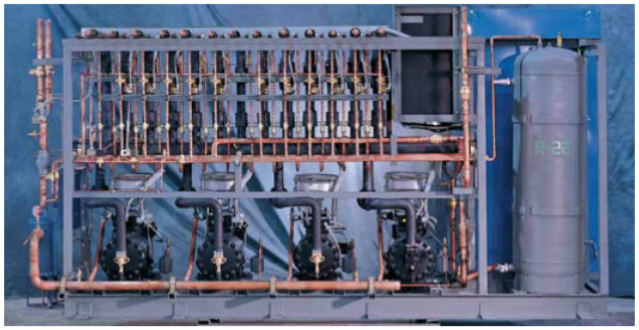

Hill Phoenix, Inc.

Figure 47-4. Note the use of a liquid line receiver on this commercial mechanical rack of four compressors in parallel.

Copyright Goodheart-Willcox Co., Inc.

A distributed system's compressors operate in a multiplexed manner (common discharge line and common suction line) to refrigerate a row of coolers containing products, such as produce, dairy, or frozen food, **Figure 47-6**. As the temperature of one or more of the products is satisfactory, the compressor or compressors are cycled off to match the capacity of the refrigeration system to the coolers. The primary benefit of distributed systems is a 65% to 75% reduction in refrigerant charge. This reduced refrigerant charge is cost-effective. Additional benefits include flexibility in installation and controls.

47.1.3 Other Applications

Heating, cooling, preserving, and freezing food, drinks, and other products are a major part of numerous businesses. Many of the refrigeration systems used in bakeries and supermarkets can be found performing in similar situations in restaurants, pharmacies, convenience marts, and other businesses. Refrigeration systems with special temperature and humidity controls are also used in florist shops, laboratories, hospitals, and funeral homes. Refrigeration systems used in different applications for different purposes vary in their controls, operating components, and capacity, **Figure 47-7**.

Hill Phoenix, Inc.

Figure 47-5. Supermarket machine room. Top—Exterior view of a rooftop machine room. The vents are used to release condenser heat. Bottom—Inside view of a machine room. The multiple condensing units are prewired and piped by the manufacturer.

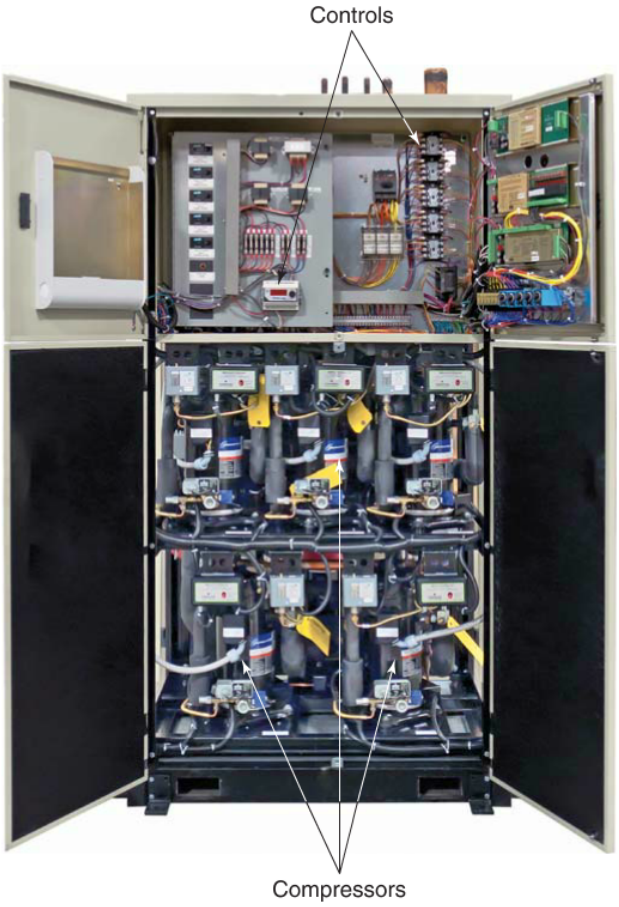

Zero Zone, Inc.

Figure 47-6. Opening the front panels reveals several multiplexed compressors and their controls. Distributed systems may be used to operate multiple produce, dairy, meat, or frozen food merchandisers.

47.2 Commercial Refrigeration Systems

The type of refrigeration system installed depends on the conditions that must be maintained. Owners and installers must consider the amount of product that must be refrigerated, the space required to fit the unit, the temperature and humidity set points, the amount of heat that will be introduced throughout the day, and related factors. Some commercial refrigeration systems are prebuilt for specific applications. Others must be custom-made.

Copyright Goodheart-Willcox Co., Inc.

A

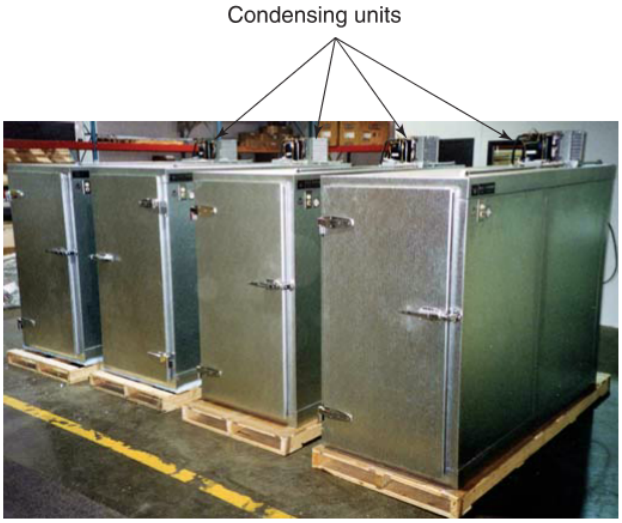

B

Traulsen Refrigeration; U.S. Cooler Company

Figure 47-7. A—A refrigerated preparation table keeps pizza and sandwich ingredients cool, fresh, and readily available for restaurant orders. B—Refrigerated mortuary body boxes are used to prevent deterioration of the deceased.

47.2.1 Commercial Cabinet Construction

Commercial cabinet surfaces are either metal or plastic. Finishes are designed for easy cleaning. Structural members are steel, capable of supporting the evaporator and condensing unit. Insulation is usually polystyrene or urethane in slabs or foamed in place.

The capacity of the evaporator and condensing unit must be adequate for the required application. Refrigeration should be possible under the most severe service conditions. In some cases, heat leakage may cool the cabinet surfaces enough to cause moisture to condense on them. To avoid this condition, some cabinets have a resistance heating strip. The strips are located around certain outer surfaces to warm them and prevent condensation from forming.

Many commercial refrigeration cabinets are designed to be used with a remote condensing unit. These condensing units may be simultaneously connected to several refrigeration cabinets of different temperatures. Most commercial refrigeration condensing units are air-cooled, but some are water-cooled.

Temperature Alarm Systems

In some installations, such as food freezers, an electrical alarm system will sound if the temperature in the cabinet rises above an upper safe limit. These systems sometimes operate from the electrical circuit powering the compressor. Others are provided with a battery arrangement. If the batteries are in good condition, the alarm will work even during a power failure.

Ice Banks

Many types of coolers, vending machines, and other medium-temperature commercial refrigeration systems use ice banks to provide reserve cooling capacity. During periods when the system cooling demand is low, an ***ice bank*** (solid block of ice) forms around the evaporator. When demand increases, the ice bank is able to absorb much of the heat and prevent the refrigeration system from being overloaded, **Figure 47-8**.

A typical system of this type is found in some drink dispensers. Ice builds up during periods of low activity. This ice is then used to cool beverages during periods of high activity. Another use for this type of refrigeration is in an air-conditioning system used on a periodic basis (such as a church building).

A control is needed to limit the amount of ice that is formed. A conventional temperature control cannot distinguish between ice and water, since either can exist at 32°F (0°C). An ice bank control must be used.

Older ice bank controls use a sensing bulb with two compartments divided by a membrane. One side contains water. When frozen, the water expands and flexes the membrane. The other side contains a liquid that transmits

Copyright Goodheart-Willcox Co., Inc.

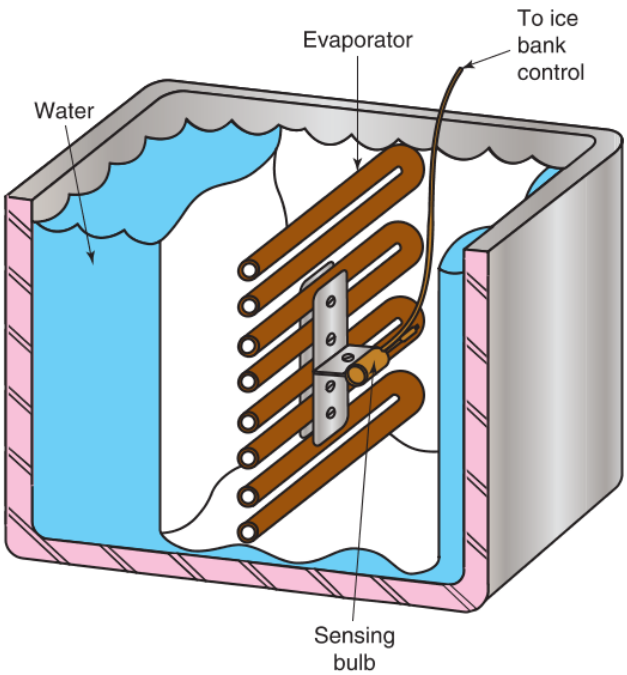

Invensys Climate Controls Americas

Figure 47-8. In this ice bank, a sensing bulb monitors temperature and pressure. If the temperature is below 32°F, the ice bank control turns the compressor off. If the temperature is at 32°F, the bulb senses a pressure increase due to ice crystals forming in part of the bulb. Then the control also turns the compressor off.

the membrane movement up to the head of the sensing bulb. This movement operates a control switch that turns off the compressor. With the system off, some of the ice is allowed to melt. The cycle for making and detecting ice can then begin again. These bulb-type ice bank controls are still sold and in use to some extent.

A modern ice bank control senses the electrical conductivity between a set of stainless steel electrodes and modifies its output accordingly. The electrodes are used to measure the thickness of the ice and control the level of liquids. Ice bank controls are used in a small refrigeration system to provide a greater than normal refrigeration capacity for set periods of time during peak demand. Ice bank controls are typically used in vending machines, milk coolers, beer coolers, and similar systems.

47.2.2 Walk-In Cabinets

Many restaurants and supermarkets store perishable items in ***walk-in cabinets***, which provide a large commercially refrigerated space for various products. These cabinets have large doors and sometimes windows. Walk-in cabinets may be referred to as *butcher boxes*, **Figure 47-9**.

Sizes of walk-in cabinets vary. However, two heights are usually considered standard: 7′-6″and 9′-10″ (2.3 m and 3 m) outside dimensions. The dimensions of other walk-in cabinet sizes are listed in **Figure 47-10**.

Many cabinets are made with metal linings and exteriors. The usual metal is galvanized steel or aluminum. Vinyl, porcelain, and stainless steel are also used extensively. Cabinet doors are usually of the same construction as the box. They are lined with gaskets to make the box airtight. Door latches must be accessible from inside a cabinet for safety, **Figure 47-11**. The doors may also be provided with heating wires along the edge. These wires eliminate sweating and freezing. Often these heating wires are called mullion heaters.

Some walk-in cabinets are dual-temperature units. They have a compartment to keep food cold (about 40°F) and a compartment to keep food frozen (below 0°F).

Cabinets may have additional reach-in doors, usually with two, three, or four panes of glass. Instead

Hill Phoenix, Inc.

Figure 47-9. Walk-in cabinet with a 37°F (3°C) holding temperature with an R-502 air-cooled thermal balanced semiautomatic system.

Copyright Goodheart-Willcox Co., Inc.

Walk-In Cabinet Dimensions		
Length	Height	Width
7′	5′	9′–10″
8′	6′	9′–10″
8′	8′	9′–10″
9′	7′	9′–10″
12′	10′	9′–10″
6′	5′	7′–6″
6′	6′	7′–6″
7′	6′	7′–6″

Goodheart-Willcox Publisher

Figure 47-10. Walk-in cabinets are available in the sizes listed.

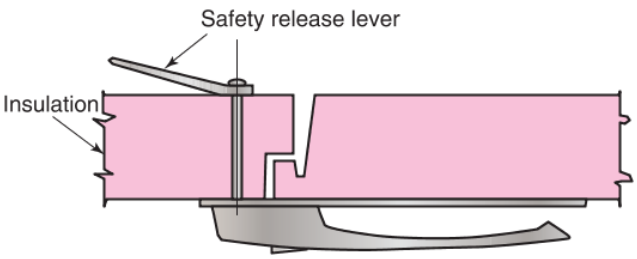

Goodheart-Willcox Publisher

Figure 47-11. An inside safety release lever is connected to the door latch. The inside lever can be used to open the door in an emergency.

of insulation, these doors have two or three dead-air spaces arranged in such a way that they are airtight. Plate glass is usually used. Special chemicals, such as calcium chloride, keep the spaces between the panes free from moisture.

Most walk-in cabinets now use foamed-in-place insulation of rigid polyurethane. Foamed between the inner and outer walls, such insulation produces a strong wall. The insulation eliminates the need for metal framing. Insulation is usually 4″ (10 cm) thick. Floors are also insulated to prevent heaving from underlying frost.

Walk-in cabinets usually have a lighting system. Some have a wall-mounted evaporator that is separated from the main part of the cabinet interior by a vertical baffle. Forced-draft evaporators are popular, **Figure 47-12**.

The temperature of a walk-in cabinet depends on its use. For meat or fresh produce storage, a temperature between 35°F (2°C) and 40°F (4°C) is needed. Relative humidity should be about 80%. Air movement is necessary. ***Ultraviolet lamps*** may also be used to help control bacteria and mold growth, **Figure 47-13**.

U.S. Cooler Company

Figure 47-12. This walk-in cabinet meat locker contains hooks for hanging meat and a forced-draft evaporator to distribute cool air evenly.

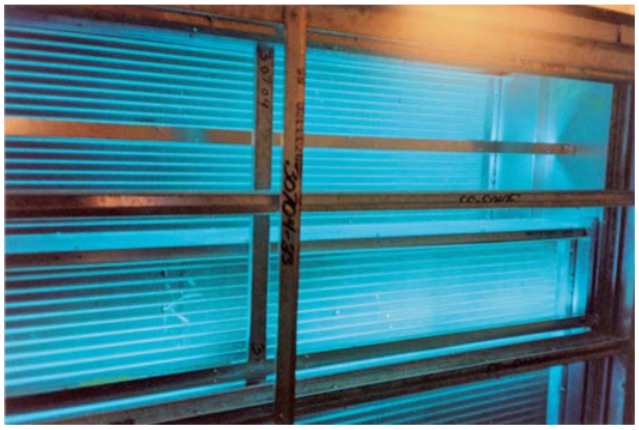

Steril-Aire

Figure 47-13. The blue glow from ultraviolet lamps floods these evaporators with protection from undesirable biological growth.

Caution

Ultraviolet Light

Overexposure to ultraviolet rays is dangerous. Therefore, people working near these lamps must be protected from the rays. Otherwise, the lamps must be turned off when anyone is in the cabinet.

Copyright Goodheart-Willcox Co., Inc.

Some type of drain is recommended for walk-in cabinets. **Figure 47-14** shows a common drain installation method for a prefabricated walk-in that is located on a permanent floor.

In systems where dehydration of foods is not important, colder temperatures may be used. Less attention may be paid to relative humidity. Examples of this are milk storage and beverage cooling. Forced-draft evaporators are commonly used in these installations. Walk-in cabinets (walk-in freezers) are also used for storing frozen foods.

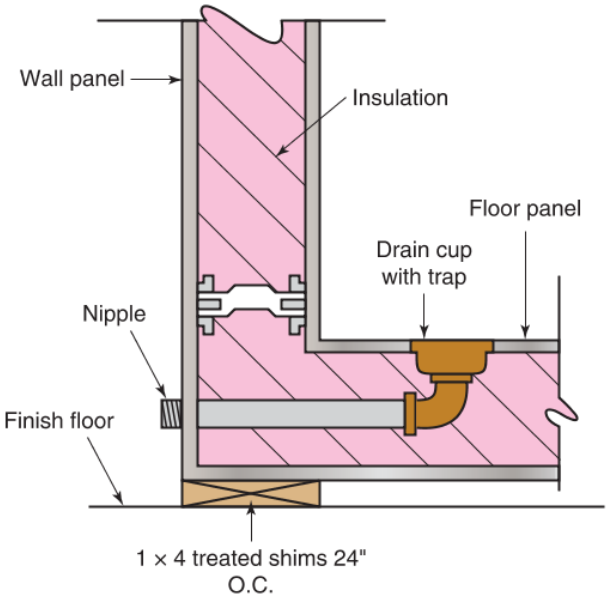

Goodheart-Willcox Publisher

Figure 47-14. Note that the connection of this walk-in cabinet drain is part of the prefabricated bottom section.

47.2.3 Florist Cabinets

Florist cabinets form a unique market in the refrigeration industry. Display cabinets are often the focal point of the entire retail operation, both in cabinet design and product presentation. See **Figure 47-15**.

Florist cabinets differ from food service cabinets in the following ways:

- Humidity is important in maintaining a long life for the floral items.
- Because many floral items are fragile, only low-velocity air evaporator coil designs are used. Proper equipment sizing allows for warm air defrost.
- Floral cabinets use large amounts of glass in their doors and windows. The additional heat loads from these components must be taken into account when sizing the equipment.
- The lighter product load of floral equipment should be a factor when determining a final Btu/hr load requirement.

The Society of American Florists (SAF) recommends a storage temperature range between 34°F and 38°F (1°C and 3°C) with 80%–90% humidity. Due to the delicate nature of flowers, the upper ranges of this temperature range are recommended to avoid product loss. Humidity levels above 90% can cause condensation, which may create a mold infestation.

Cabinet walls and ceiling panels should be well insulated with a minimum of R-22 value insulation. A vapor barrier between the cabinet and outside wall must be designed to prevent condensation on outside walls. Insulated floors, while not required on grade level applications, do provide energy savings. They are required if any cavities exist under the floor on which the cabinet rests. Glass doors should be rated for operation in a refrigerated application. Glass panels should be of thermal-pane construction, and glass heat will be required if ambient store conditions will not be properly maintained. Due to the high humidity present, all internal shelving should be constructed of nonabsorbent, corrosion-proof material. All drain lines must be trapped to allow for free flow of condensate water to an approved drain, and to eliminate negative pressurization of the evaporator coil.

Courtesy of Sporlan Division - Parker Hannifin Corporation

Figure 47-15. A florist's refrigerated display cabinet with pass-through glass doors, lighting, and low-velocity evaporator coils.

Ethylene gas is a naturally occurring hormone produced by all plant tissue. It is an odorless gas that accelerates the aging process in flowers and plants. This causes up to 30% of loss, due to shrinkage, in the floral industry. Improper temperature and humidity accelerate the production of ethylene gas. Signs of ethylene damage include discoloration, wilting, spotting, and the dropping of petals and leaves. Ethylene gas filters (EGF) are formulated with a natural mineral compound. These filters trap and neutralize the gases. Replace EGFs every 120 days, **Figure 47-16**.

Copyright Goodheart-Willcox Co., Inc.

SRC Refrigeration

Figure 47-16. Ethylene gas filters (EGF) decrease damage due to ethylene in floral cabinets.

Alto-Shaam, Inc.

Figure 47-17. Unit designed to warm items in the upper section while cooling the items in the lower section.

47.2.4 Hot and Cold Merchandisers

The combination of both hot food holding and cold food refrigeration in one unit is called a ***hot and cold merchandiser***. The heated upper section uses a gentle, uniform heat source, providing better moisture retention, appearance, and a longer holding life of food. The upper canopy includes a sneeze guard for an extra measure of safety, while overhead heating and lighting illuminates the product display. The lower refrigerated display base may be used for packaged side dishes, soft drinks, and precooked entrees, **Figure 47-17**.

47.2.5 Display Cases

Refrigerated display cases are used by merchants to provide ease of shopping and to promote their products. These cases have a top or side opening through which customers can see and access the items. At the same time, the food is kept safely refrigerated behind glass doors or air curtains. Display cases are often used for fresh produce, frozen foods, fresh meats, and dairy products, **Figure 47-18**.

Courtesy of Sporlan Division - Parker Hannifin Corporation

Figure 47-18. An assortment of refrigerated display cases.

13

Copyright Goodheart-Willcox Co., Inc.

The location of display case evaporators may be overhead, on an end, or at the base. These evaporators must be narrow to allow for maximum conditioned cabinet space. The evaporators are made with fins as small as 1 1/4″ (32 mm) wide. Some of the shelf evaporators are plain tubing. Display case evaporators are usually connected in series.

Many display cases are now using forced-draft evaporators for cooling, since these require little space. Because of the circulating air, they provide even refrigeration temperatures throughout the display case. Higher temperature cases are used for fresh meats and dairy products. In order for frozen food display cases to maintain temperatures near 0°F (–18°C), the evaporators must operate at –10°F to –15°F (–23°C to –26°C). Temperature settings are based on the contents in a display case. **Figure 47-19** shows the recommended temperature for some common applications.

The need to maintain a low temperature presents an evaporator defrosting problem. The evaporator must be defrosted at least once a day. This must be done quickly to prevent the case from getting too warm. The defrosting is often done automatically with a timer signaling the system to perform hot-gas defrosting or to energize an electric heat defrosting device. See Chapter 21, *Heat Exchangers*, for details concerning defrosting methods and controls.

Display cases vary in design, length, and height. They can be designed as upright cabinets or as chests. Both of these designs can be made as one of the two general types:

- Glass-enclosed display case.
- Open display case.

Glass-Enclosed Display Cases

Glass-enclosed display cases may be designed as a chest or an upright cabinet, **Figure 47-20**. Some cases have additional refrigerated storage space beneath the display section of the counter. Such cases usually serve as a temporary container for food or produce. Those contents are then transferred to a walk-in cabinet overnight. Therefore, temperatures may be kept at 40°F (4°C) to 45°F (7°C) in both compartments.

The low temperatures used in storing and displaying frozen foods in glass-enclosed cabinets may cause moisture to condense on the glass and obstruct the view. In order to stop condensation, heater wires are installed along those parts of display cases where condensation from the air might collect.

Open Display Cases

Chest-style open display cases have an opening on top that provides access to the refrigerated products

Display Case Temperatures

Type of Fixture	Temperatures	
	Minimum[a]	Maximum[b]
Dairy		
Multideck	36°F	38°F
Produce, Packaged		
Single-Deck	35°F	38°F
Multideck	35°F	38°F
Meat, Unwrapped (closed display)		
Display Area	36°F[b]	[b]
Deli, Smoked Meat		
Multideck	32°F	34°F
Meat, Wrapped (open display)		
Single-Deck	24°F	26°F
Multideck	24°F	26°F
Frozen Food		
Single-Deck	[c]	–13°F[d]
Multideck	[c]	–10°F[d]
Glass Door Reach-in	[c]	–5°F[d]
Ice Cream		
Single-Deck	[c]	–24°F[d]
Multideck	[c]	–12°F[d]

[a]These temperatures are air temperatures, with the thermometer in the outlet of the refrigerated airstream and not in contact with the product displayed.

[b]Unwrapped fresh meat should only be displayed in the closed, service-type display case. The meat should be precooled to 36°F internal temperature prior to placing on display. The case air temperature should be adjusted to keep the internal meat temperature at 36°F for minimum dehydration and optimum display life. Display case air temperature varies with manufacturer.

[c]Minimum temperatures for frozen foods and ice cream are not critical (except for energy conservation); maximum temperature is important for proper preservation of product quality.

[d]The differences in display temperatures among the three different styles of frozen food and ice cream display cases are a result of the orientation of the refrigeration air curtain and the size and style of the opening. The single-deck has a horizontal air curtain and opening of 30″. The open multishelf has a vertical air curtain and opening of 42″ to 50″. The glass door reach-in has a vertical air curtain protected by a multipane insulated glass door.

Reprinted by permission of the American Society of Heating, Refrigerating, and Air-Conditioning Engineers, Atlanta, Georgia, from the 1994 ASHRAE Handbook—Refrigeration

Figure 47-19. These temperatures are recommended for the display of certain foods.

Copyright Goodheart-Willcox Co., Inc.

A B

REMIS AMERICA, LLC

Figure 47-20. A—Chest-style glass-enclosed display case. B—Upright cabinet-style glass-enclosed display case.

inside. The walls, or the upper part of the walls, may be enclosed in three to four layers of glass, **Figure 47-21**. Evaporators are usually below the conditioned space with ducts circulating chilled air, **Figure 47-22**.

Upright cabinet-style open display cases use forced-draft evaporators to distribute cold air through ducts. These ducts connect to grilles at the rear of the case that may be at the level of the refrigerated products or above the products. The warm air returns down the front of the case.

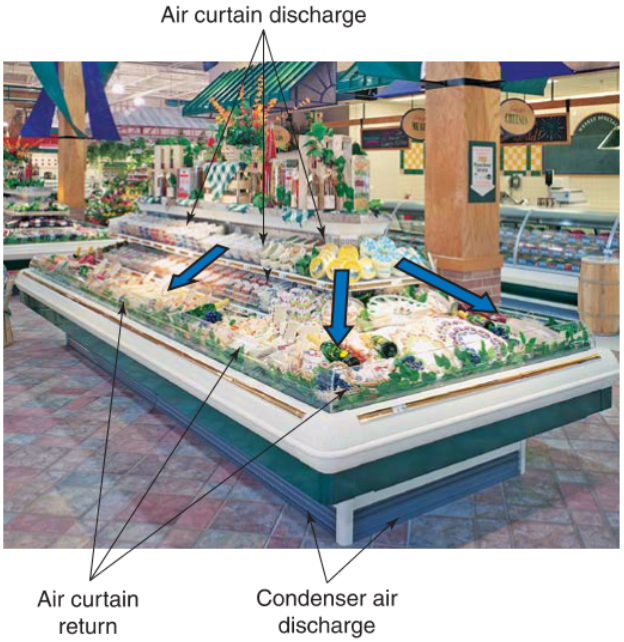

Hill Phoenix, Inc.

Figure 47-21. Multilevel open display case using a refrigerated air curtain to maintain low temperatures and separate its contents from ambient air.

Many supermarkets have upright cabinet-style open display cases for produce. These cases are kept at about 40°F (4°C) and at a high humidity level. If dry air circulates over the contents, some of the moisture will be removed. This dry air spoils the appearance and decreases the weight of the produce. To keep humidity high, misting systems are often installed in open display cases, which include nozzles that spray water droplets over the produce, **Figure 47-23**. Produce that is sensitive to humidity includes cabbage, celery, carrots, radishes, herbs, and leafy greens, such as kale, chard, cress, and collard greens.

To maintain a low-temperature, high-humidity atmosphere, produce is isolated from ambient air using an air curtain. An air curtain is a stream of air that blows between a conditioned space and an unconditioned space to isolate the two spaces. Some cabinets use two or three air curtains. The principle of operation is shown in **Figure 47-24**.

Open display cases must be protected from drafts produced by grilles, unit heaters, and fans. Drafts will interfere with the air curtain of the case. This will cause higher operating costs and defrosting problems. Since several open display cases are usually connected end-to-end in supermarkets, the total electrical load must be carefully checked to see if it will provide enough service to avoid any overloads.

47.2.6 Quick Chillers and Blast Chillers/Freezers

13

Food preparation and food safety are extremely important aspects of health and human safety. Refrigeration continues to play a significant role in reducing health-related problems due to bacteria or

Copyright Goodheart-Willcox Co., Inc.

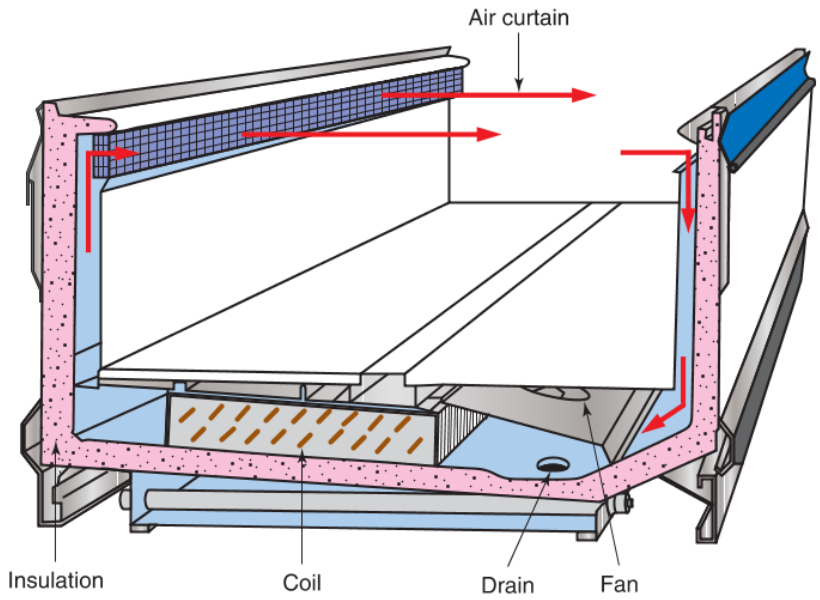

Hill Phoenix, Inc.

Figure 47-22. Notice the air curtain across the top of this open frozen foods case.

mold growth in foods. Cases of food poisoning around the world are often the result of improper food preparation and storage.

The US Department of Agriculture (USDA) has issued guidelines on food preparation and storage. The USDA requires hot foods to be cooled to 70°F (21°C) within two hours and then to 41°F (5°C) within the next four hours. It is critical that food not be cooled too slowly or too quickly. Cooling the food too slowly will allow the growth of bacteria. If food is cooled too rapidly, there will be a loss of flavor.

Controlled rapid cooling of foods is necessary to meet these requirements. In large kitchens, such as cafeterias and banquet halls, mass quantities of food are cooked in advance and stored for future use. Hot food must be brought from its oven temperature of up to 450°F (232°C) down to 70°F (21°C) within two hours. It must then be cooled to 41°F (5°C) within the next four hours. This type of cooling is performed by a quick chiller or blast chiller.

Standard refrigerators and freezers are designed to operate as refrigerated storage cabinets. They are not designed to displace the heat load required to safely and quickly lower the temperature of hot, cooked foods. Placing cooked food in a standard refrigerator or freezer could cause its compressor to operate continuously to remove the high heat load. Continuous operation could cause a standard refrigerator-freezer's evaporator to become frosted, which reduces heat transfer efficiency. A standard refrigerator-freezer's defrost function would stop the compressor to defrost the evaporator, which would prolong the cooling of the cooked food. Unlike standard refrigerator-freezers, quick chillers and blast chillers are designed to handle the large heat load required to cool hot, cooked food.

A ***quick chiller*** is a type of refrigeration system that cools hot food rapidly and uniformly without freezing the product. Bacteria and germs can grow and spread quickly in the temperature range of 40°F to 140°F (4°C to 60°C). Food products are much safer from bacteria and germs at temperatures below 40°F (4°C)

Hussmann Corporation

Figure 47-23. An upright cabinet-style open display case with a concealed overhead misting system and a canopy of air that flows over the fruit to the front of the case.

Copyright Goodheart-Willcox Co., Inc.

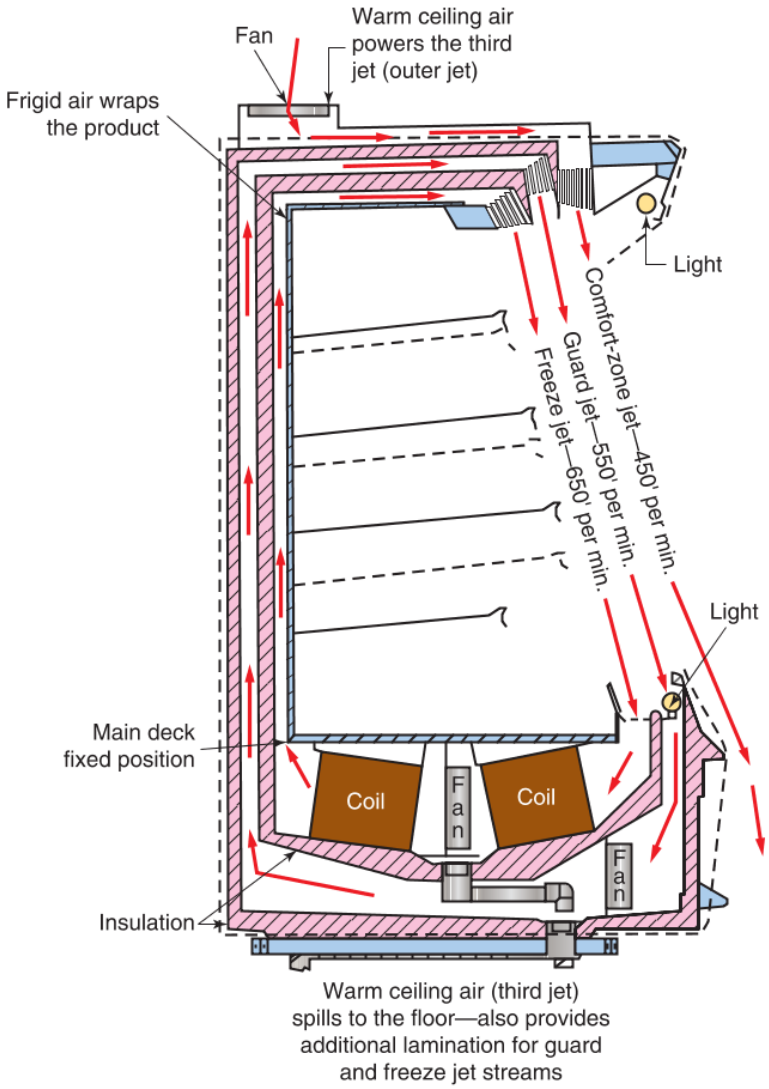

Kysor/Warren

Figure 47-24. Upright frozen foods display case has three air curtains, each flowing at a different speed.

and above 140°F (60°C). To safeguard food products and consumers, the cooling process must be carefully controlled using a quick chiller, **Figure 47-25**.

Like a quick chiller, a ***blast chiller*** cools hot food rapidly and uniformly without freezing the product. However, a ***blast freezer*** cools and *freezes* hot food rapidly and uniformly. An alternative name for blast freezer is *shock freezer*. Some units can be programmed to function as either blast chiller or blast freezer, **Figure 47-26**.

Modern quick chillers and blast chillers/freezers use microprocessor controls for chilling, defrosting, and maintaining food temperature. Many units also have keypads and built-in printers. These controls and options may be used to record food-cooling operations and provide a printed report of system operation. Some chilling units use temperature probes that are inserted into the food. The temperature probes provide accurate measurement of each tray of food placed in the cabinet.

47.2.7 Refrigerated Dispensers

Refrigeration systems are often incorporated into food and drink dispensing machines. Such systems cool and prepare products for convenient and immediate consumption. These machines are extensively used in restaurants and cafeterias.

Copyright Goodheart-Willcox Co., Inc.

Traulsen Refrigeration

Figure 47-25. This undercounter quick chiller is capable of rapidly and uniformly cooling hot food in two hours or less. Note the microprocessor control.

Traulsen Refrigeration

Figure 47-26. This blast chiller's condensing unit is in its base. Controls and a report printer are along its side.

Beverage Dispensers

Many restaurants, convenience stores, and fast-food establishments use beverage dispensers to dispense both carbonated and noncarbonated soft drinks. These generally fall into two categories, passively chilled and mechanically chilled. Industry standard is for the delivered beverage to be 40°F (4°C) or below.

Passively chilled beverage dispensers transport syrup and water through stainless steel tubing that is surrounded by the same ice that is dispensed for individual drinks. The tubing is encased in an aluminum cold plate that is situated at the bottom of an insulated bin filled with ice. The ice provides for both chilling of the product (through heat exchanged from the cold plate to the ice) and for being served with the individual drink.

There are two ice options for passively chilled beverage dispensers:

- A mechanism that automatically dispenses ice on demand.
- Manually scooping ice from the bin.

The automatic type is typically equipped with an ice machine installed on top of the unit that dispenses ice directly into the ice bin, to provide for a constant supply of ice, **Figure 47-27**. The manual type requires ice to be loaded into the ice bin by hand, **Figure 47-28**.

For mechanically chilled beverage dispensing equipment, syrup and water pass through stainless steel tubing located in an insulated water bath. The refrigeration system's evaporator coil is also immersed in the water bath. Heat from the syrup and water is absorbed into the water bath, and the refrigerant in the evaporator coil absorbs heat from the water bath. For more information on these types of evaporators, see Chapter 21, *Heat Exchangers*.

In operation, the coil becomes covered with 3″ to 4″ (76 mm to 100 mm) of ice across its entire surface, providing for the cooling of the water bath (32°F to 34°F, 0°C to 1°C). A motor agitates the water constantly, keeping colder water in contact with the product tubing to allow for heat exchange. The compressor is controlled by a device that senses the size of the ice bank, not the temperature of the water bath. This device

Copyright Goodheart-Willcox Co., Inc.

Lancer Corporation

Figure 47-27. The ice dispensed from the chute in the center of this passively chilled beverage dispenser also cools the beverages in the unit.

Lancer Corporation

Figure 47-28. A passively chilled beverage dispenser with a bin where the ice is stored.

switches the compressor off to prevent the ice bank from coming into contact with the product tubing. It will then switch the compressor on when the ice bank has been depleted from absorbing heat due to product being dispensed.

Mechanically chilled equipment is generally sized by compressor capacity, which ranges from 1/4 hp to 3/4 hp (186 to 560 watts). As a rule, these systems use capillary tubes as opposed to expansion valves. Refrigerant charge amounts are usually less than 1 lb (454 grams), making for a delicately balanced system.

Water Coolers

Water coolers are refrigeration units designed to cool and dispense drinking water. Water coolers chill water using mechanical refrigeration. Evaporator tubing absorbs heat from the dispensing water. This heat is expelled through a condenser into ambient air. The water-cooling section containing the evaporator is insulated. Removing an access panel from a unit reveals a small hermetic compressor, a condenser, and controls, **Figure 47-29**.

Since the cooling demand on water coolers is very irregular, they must have some hold-over capacity. However, they must not overcool the water. Hold-over capacity is provided either by using a large insulated cooled water storage tank or having a large water-cooling surface in the evaporator that quickly chills water.

Different water cooler models are used in different applications. In many schools, hospitals, and businesses, plumbed tap water coolers are used and commonly called *drinking fountains*. In office buildings

Goodheart-Willcox Publisher

Figure 47-29. A water cooler usually contains a small hermetic compressor and small condenser for the low heat load it handles.

13

Copyright Goodheart-Willcox Co., Inc.

and homes, self-contained or standalone (with no plumbing) water coolers are used and commonly called *water coolers*.

A ***tap water cooler*** is a water cooler that has a plumbed water supply and drain connections. A tap water cooler's supply and drain connections must be installed according to local codes. The plumbing should be concealed. A hand shutoff valve should be installed in the water supply line. A drain pipe, at least 1 1/4" (3 cm) in diameter, should be provided.

Code Alert

Water Cooler Requirements

Section 410 of the International Plumbing Code (IPC) covers drinking fountains (water coolers). Section 405 of the IPC covers the installation of fixtures.

Tap water cooler basins are generally porcelain-coated cast iron, porcelain-coated steel, or stainless steel. The lowest part of the basin is where the water enters the drain piping. Water is dispensed from a valve called a bubbler. The bubbler opening must be above the drain. This eliminates accidental siphoning of the drain water back into the fresh water system.

A water pressure regulator determines the water flow. Tap water coolers frequently use heat exchangers to cool tap water before chilling it with refrigeration. Fresh tap water is precooled in a heat exchanger by the chilled waste water going down the drain. Refer to the water cooler diagram in **Figure 47-30**.

A thermostat with a sensing bulb is attached to the water-dispensing tube. It maintains the desired drinking water temperature in the water cooler by communicating with the thermostat motor control, which cycles

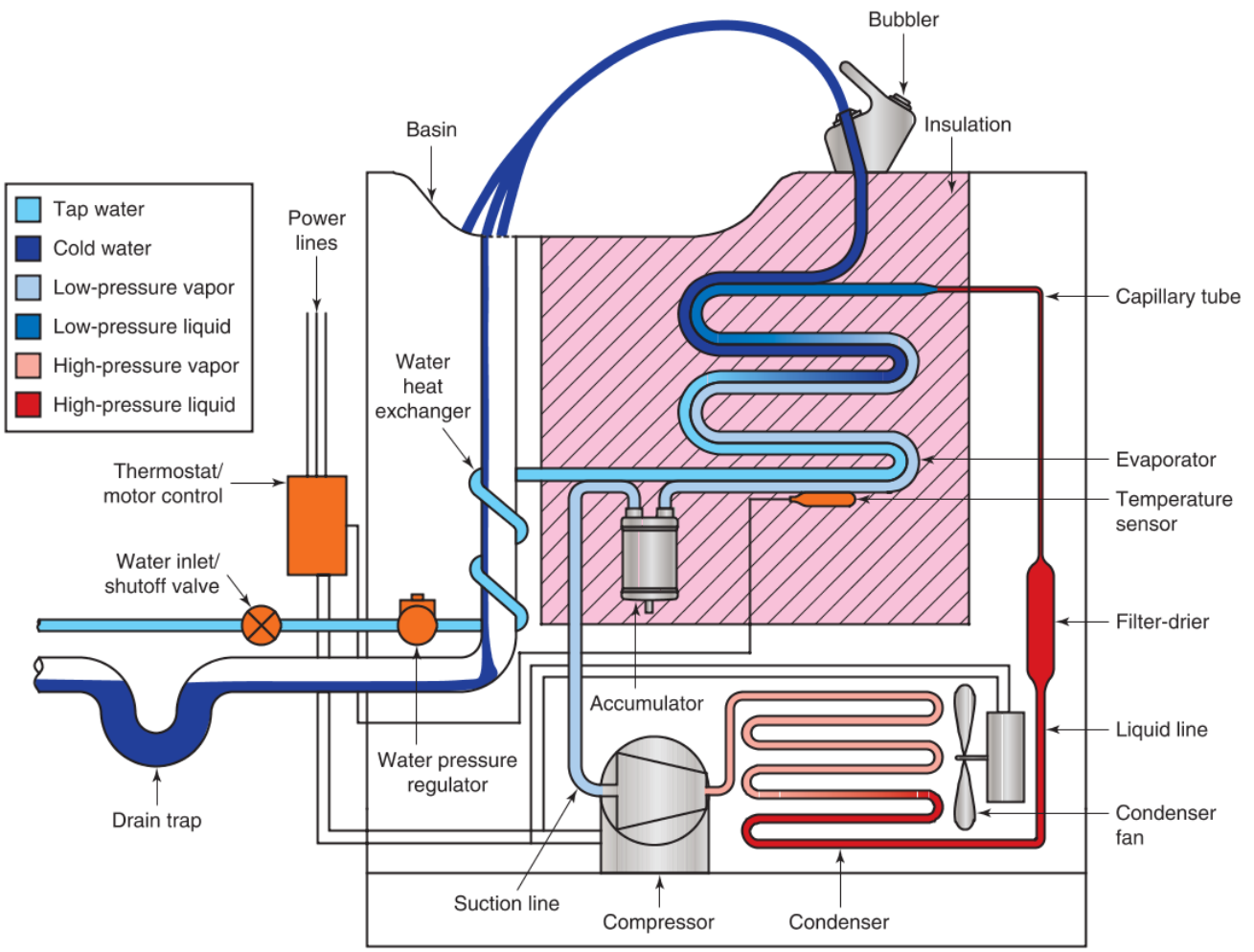

Goodheart-Willcox Publisher

Figure 47-30. Diagram illustrating a drinking fountain cooled by a compression refrigeration system.

Copyright Goodheart-Willcox Co., Inc.

the compressor on and off as needed. Water leaving the fountain should be approximately 50°F (10°C). Water cooler condensers generally use a fan to increase heat transfer with ambient air. The condenser fan is connected into the electrical circuit and runs whenever the compressor is running.

Article 410.2 of the International Plumbing Code (IPC) and its exception state that where a drinking fountain is required, at least one drinking fountain must comply with requirements for people who use a wheelchair. **Figure 47-31** shows a water cooler universally designed for easy access for people who use wheelchairs. This water cooler incorporates a low-profile design with a large touch pad to permit ease of use.

A ***self-contained water cooler*** is a standalone water cooler that has its own water supply from a tank and does not have a drain. Self-contained water coolers are especially desirable in locations where a building's plumbing cannot be easily tapped. Large plastic containers of water are used for the supply. The refrigeration system used is similar to that found in other water cooler models, **Figure 47-32**.

Multiple water coolers, instead of individual ones, are popular for certain applications. These coolers have one large condensing unit supplying refrigeration to many water cooler bubblers. They are often used for large business establishments, office buildings, or factories.

Goodheart-Willcox Publisher

Figure 47-31. Chilled water cooler drinking fountain with a barrier-free design for easy access by people who use wheelchairs.

Goodheart-Willcox Publisher

Figure 47-32. Water coolers with self-contained water supplies often have an outlet for chilled water and another for room temperature or heated water.

Milk Dispensers

Many food service businesses dispense milk from bulk containers. Cans or plastic bags holding 3 to 5 gallons (11 L to 19 L) of milk are installed in dispensers. These units must meet all health and sanitation codes. Milk is kept at about 36°F (2°C) by a hermetic refrigeration system. Reserve milk containers are kept in a walk-in cooler or in a milk storage refrigerator.

Dispensing Freezers

Special applications of refrigeration systems are used in dispensing freezers. ***Dispensing freezers*** are refrigeration systems that cool or fast-freeze and

Copyright Goodheart-Willcox Co., Inc.

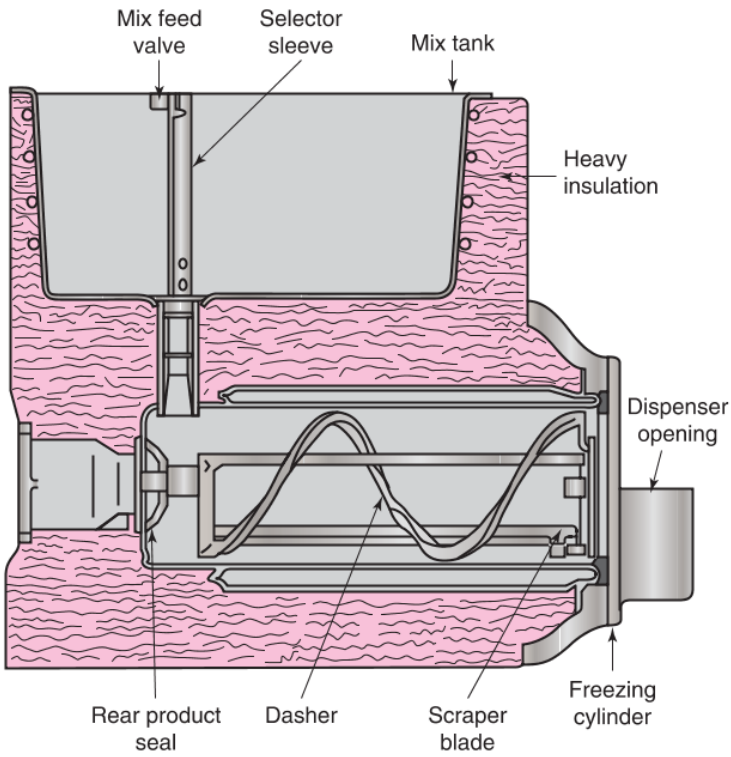

Sweden-Alco Dispensing Systems, a Div. of Alco Foodservice Equipment Co.

Figure 47-33. Components of a dispensing freezer.

dispense liquid mixes into soft serve or batch ice cream, shakes, or frozen beverages. The liquid mix is cooled or frozen under agitation and then dispensed for immediate consumption.

The mix is typically purchased from a local dairy or other mix supplier. The liquid mix is poured into a refrigerated mix storage (either a hopper above the freezing cylinder or a lower mix cabinet). The mix is then fed into a freezing cylinder, where it is frozen and dispensed. Inside the freezer cylinder, a beater or dasher is driven by a separate motor. Dispensing freezers typically freeze about one gallon of soft serve in 5–10 minutes. A typical hopper attached to the freezing cylinder and dispensing door is shown in **Figure 47-33**.

Most dispensing freezers can operate virtually continuously, as long as liquid mix to the freezing cylinder is replenished. The freezer is kept within a narrow temperature range, usually within 1°F or 2°F (0.5°C to 1°C) of its set temperature. Either automatic or thermostatic expansion valves are used as the refrigerant metering device. Since temperature requirements vary depending on the mix formulation, many freezers use some type of viscosity control instead of temperature controls, **Figure 47-34**.

Refrigeration systems for dispensing freezers should be rated by Btu/hr, since the compressors usually operate at medium- or low-temperature ranges. Rating dispensing freezers using horsepower or tons of refrigeration is misleading, since those ratings are for high-temperature refrigeration. In a high-temperature application, one ton of refrigeration is

Dispensing Freezer Temperatures

Dispenser Freezer Product	Temperature Requirements
Low-fat soft-serve ice cream	17°F to 20°F (–8.3°C to –6.7°C)
Soft-serve ice cream (10% fat)	20°F to 23°F (–6.7°C to –5.0°C)
Milkshakes	24°F to 28°F (–4.4°C to –2.2°C)
Sherbets	14°F to 18°F (–10.0°C to –7.8°C)
Fruit or water ices	14°F to 18°F (–10.0°C to –7.8°C)
Slushes	24°F to 28°F (–4.4°C to –2.2°C)
Frozen carbonated beverages (FCB)	24°F to 28°F (–4.4°C to –2.2°C)

Goodheart-Willcox Publisher

Figure 47-34. Table showing common temperature requirements for products used in dispensing freezers.

Copyright Goodheart-Willcox Co., Inc.

equivalent to 12,000 Btu/hr. A dispensing freezer with a product capacity of 15 gallons (56.8 L) per hour usually has a 9,500 Btu/hr refrigeration system and a dasher motor of 1.5 hp (1119 W). Most dispensing freezers are available either in air- or water-cooled systems.

The quality of the mix is very important. Many problems thought to be in the refrigeration system have turned out to be poor mixes. Health codes require keeping the mix in the mix storage and freezing cylinder at safe temperatures, usually by maintaining temperatures below 41°F (5°C). Daily cleaning may be required, and local health code rules must be followed. Heat treatment soft-serve and shake dispensing freezers are commercially available that go through a timed heating and cooling cycle every 24 hours and only require complete disassembly and cleaning once every 14 to 28 days, depending on local health codes.

Another commercial application of the dispensing freezer is the *shake maker*. This machine is filled with the desired shake mix. While some shake makers are still controlled by temperature, the newer styles are usually viscosity controlled. As the mix is frozen, the torque required to drive the dasher increases. When the amperage reaches a certain set point, the refrigeration system shuts off at servable consistency.

Some dispensing freezers are used to make slush drinks. Slush is typically a sugar-water mixture, often containing some flavoring or color. A frozen carbonated beverage is about one part syrup and four parts carbonated water. Most frozen beverages are served at 24°F to 28°F (–4.4°C to –2.2°C).

Vending Machines

Refrigerated vending machines for foods or beverages are becoming increasingly popular. They may be used to automatically dispense canned or bottled drinks, packaged ice cream or cold food, frozen desserts, and other foods. Some machines are satellite vending units that are controlled by an accompanying snack vendor. Such vending machines are not coin operated but are connected and housed in the same cabinet as a machine that is coin operated, **Figure 47-35**.

The refrigeration process allows food to maintain health and safety requirements. Cabinets often have an injected foam design and pump R-134a or R-404 through a standard 1/3 horsepower (120 Vac) hermetically sealed compressor to maintain temperatures. Vending machines are equipped with temperature sensors and health safety timers that disable sales of any product if the unit temperature rises above certain set points:

- 41°F (5°C) for cold foods.
- 0°F (–18°C) for frozen food.

A B C

Wittern Group

Figure 47-35. A—A satellite unit that maintains 41°F (5°C). B—A vending machine that is capable of offering a variety of beverages in cans and plastic containers. C—A frozen food vendor using R-404. This unit can maintain temperatures between –12°F (–24°C) and 41°F (5°C).

Frozen food vending machines typically hold temperatures between –12°F (–24°C) and 41°F (5°C). To clear condensation, heated glass is used, as is a top-mounted evaporator, which provides airflow from top to bottom.

Refrigeration systems used in vending machines typically have capillary tube refrigerant controls, hermetic motor compressors, and defrosting devices. The electrical system transfers the materials and operates the coin and currency devices. Some of the vending components of refrigerated vending machines include the following: coin and currency devices (acceptors, rejectors, changers, and steppers and accumulators), cup dispensers, heating systems, transfer systems, and card readers. The automatic operation of vending machines involves motors, magnets, signal lights, and relays. Thus, an elaborate wiring system is necessary, **Figure 47-36**.

47.2.8 Milk Coolers

Raw milk for pasteurization should be cooled to 50°F (10°C) or less within four hours after the completion of milking and down to 45°F (7°C) or less within two hours after the completion of milking. The blended temperature after the first milking and any subsequent milkings should not exceed 50°F (10°C).

Copyright Goodheart-Willcox Co., Inc.

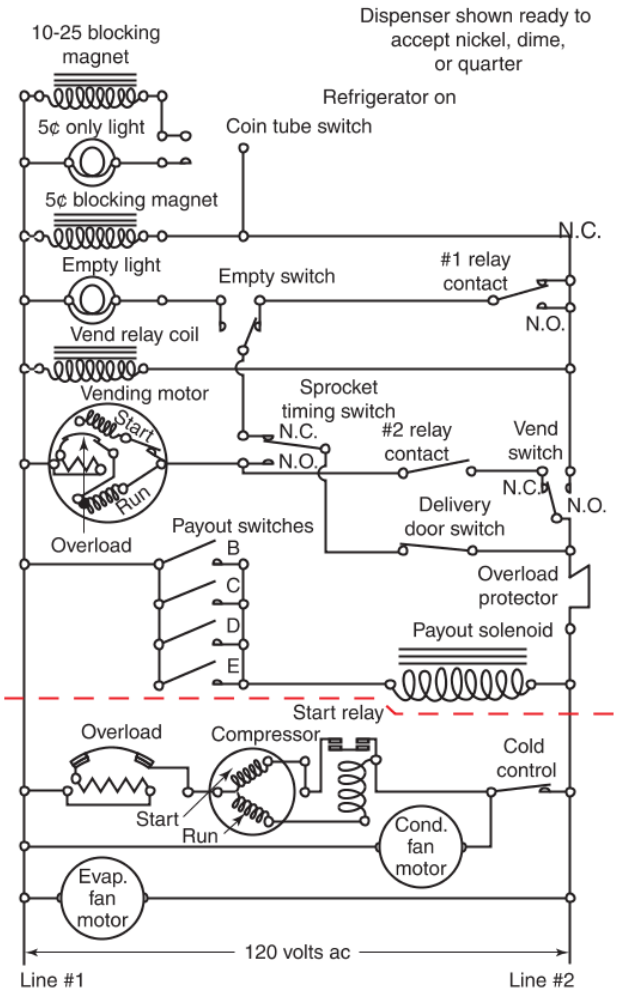

Goodheart-Willcox Publisher

Figure 47-36. Ladder diagram for a refrigerated bottled beverage vending machine. Top—Vending unit wiring. Bottom—Refrigeration unit wiring.

BouMatic

Figure 47-37. A—A flow control monitors variables to adjust the flow of milk through a heat exchanger for optimal energy efficiency. B—Water-cooled plate heat exchangers precool milk before bulk storage and cooling.

Milk coolers are refrigeration systems that cool fresh milk to the legally required temperatures in a large tank. Bacterial growth in milk is dramatically affected by temperature. During a 24-hour period, bacteria count will increase as follows:

- To 2400 at 32°F (0°C).
- To 2500 at 39°F (4°C).
- To 3100 at 46°F (8°C).
- To 11,600 at 50°F (10°C).
- To 180,000 at 60°F (16°C).
- To 1,400,000,000 at 86°F (30°C).

Some milk cooling systems incorporate precooling heat exchangers and flow controls to reduce the heat load on the bulk cooler, **Figure 47-37**. Some stainless steel bulk coolers have their evaporator in their base. Coolers of this type have a 600 to 8000 gallon (2300 L to 30 300 L) capacity.

A bulk milk cooler will usually have its condensing unit mounted outside the room where the milk

Copyright Goodheart-Willcox Co., Inc.

cooler is located (milk room), **Figure 47-38**. Since it is usually air-cooled, the condensing unit should not be put in the same room as the vacuum pump. Air flowing over the condenser can be drawn from the milk room. In winter, where permitted, this warm air can be ducted to heat the milk room. All milk coolers and condensing units must be installed by qualified technicians, following applicable plumbing and electrical codes.

47.2.9 Ice Machines

Ice machines are refrigeration systems that automatically freeze and form water into ice and dispense it for consumer use. They deposit the ice in storage bins and automatically cycle off when the storage space is full.

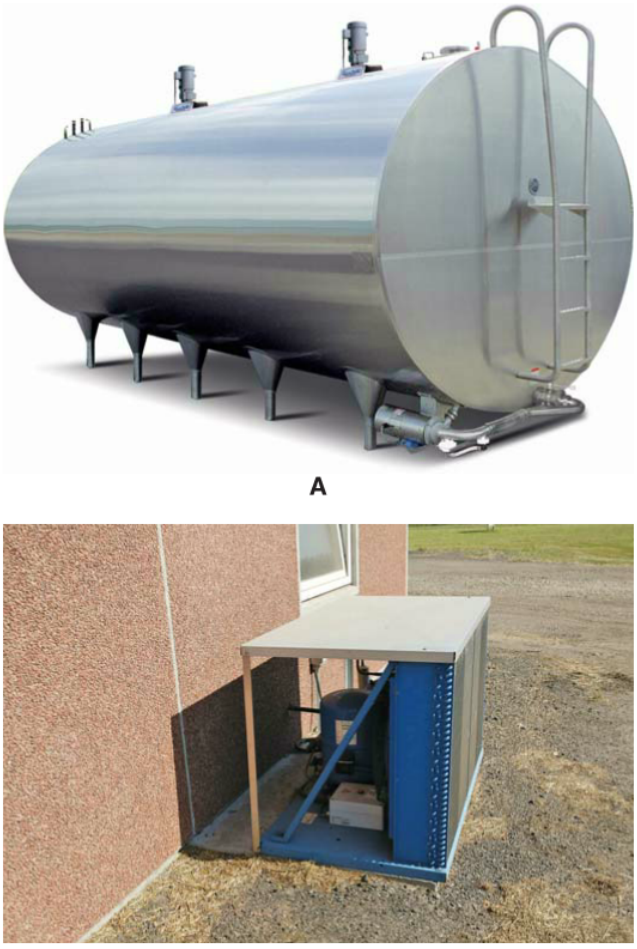

A

B

BouMatic; Danfoss

Figure 47-38. A—This bulk milk cooler has a direct expansion evaporator located in its base. B—Air-cooled condensing unit draws low-pressure refrigerant through the evaporator coils in a bulk milk cooler at a dairy farm.

The ice formed is clear and sanitary, since only flowing water is used. Cloudy ice cubes are caused by entrapped air or poor water quality.

Ice machines are widely used in commercial refrigeration. Different models are available depending on the type and amount of ice required for a given application. Ice production capacity can vary among units from a few pounds up to many tons per day. Daily capacity decreases as water temperature or ambient air temperature increases.

Once ice is formed, it is removed from the freezing surfaces in various ways. These include use of electrical heating elements, hot water, hot-gas defrosting, or mechanical devices. A quick inspection of an ice machine should reveal its ice removal method, **Figure 47-39**.

Urethane foam, polystyrene, or fiberglass may be used for cabinet insulation. The freezing surface is usually made from stainless steel or nickel-plated copper. An ice machine's water circuits and ice-freezing parts should be cleaned regularly. The storage bin can

Scotsman Ice Systems

Figure 47-39. Ice machine using hot-gas defrosting to remove ice from its mold.

13

Copyright Goodheart-Willcox Co., Inc.

be made of stainless steel or plastic. Ice machines are often self-contained, having all parts of the system in a single cabinet, **Figure 47-40**. Other ice machines use remote condensing units located outside. All ice machines require a water supply and drain plumbing.

Ice Machine Controls

Ice machines have refrigerant and motor controls located throughout the cabinet to operate the system safely and efficiently. In addition to regular refrigeration system controls, ice machines have controls for ice-making and harvesting. Floats and solenoids control water flow. Different types of sensors and switches monitor the amount of ice in a machine's storage bin. A few of the control devices used for bin capacity include mechanical levers, temperature-sensing bulbs, and photo sensors.

For bin capacity using mechanical controls, as the ice bin fills, the accumulated ice pushes against a diaphragm or actuates a lever. This opens a switch that stops the ice machine. Temperature controls for bin capacity shut off the ice machine when the ice comes into direct contact with a temperature-sensing bulb in the storage bin. Both mechanical and temperature controls are located at the top of the ice storage bin. Bin capacity photo sensors detect a light beam that is sent out across the top of the bin. When the ice reaches the top of the bin, the light beam is broken, and the ice machine stops harvesting ice.

Some ice machines have a variety of additional controls. These include sensors that measure compressor discharge temperature, water temperature, and cube size. **Figure 47-41** shows a microprocessor-based controller used to monitor all processes of operation.

An ice machine controller receives inputs from the machine's sensors and controls the reservoir fill time, starting time, harvest cycle time, and unit shut-off time. **Figure 47-42** shows a schematic wiring diagram of an ice machine with a hot-gas defrost harvesting function.

Ice Machine Evaporators

Ice machines produce ice in different shapes and forms for different purposes. The two main forms are cube and flake. While flakes are relatively consistent, cubes can vary greatly in size and shape depending on the type of evaporator an ice machine has.

Vertical Cube Evaporators

An ice machine with a vertical evaporator is shown in **Figure 47-43**. In this ice machine, evaporator tubing is located just behind cube molds. A water distribution

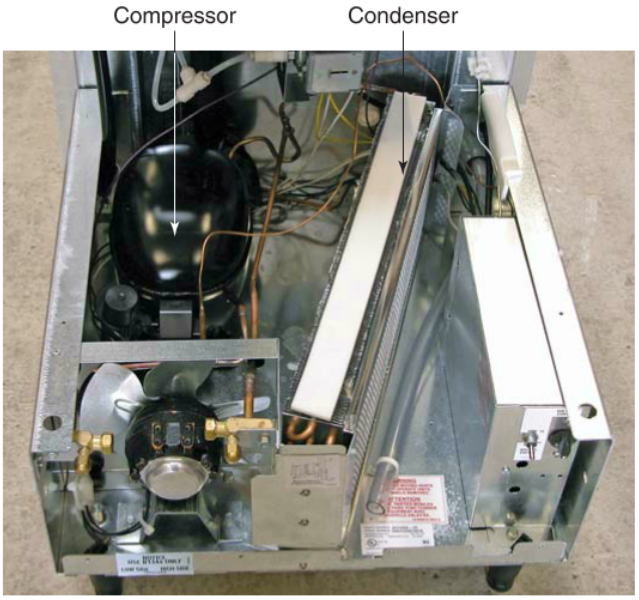

Scotsman Ice Systems

Figure 47-40. Beneath the storage bin, evaporator, and water circuit are the compressor and condenser of this self-contained ice machine.

Scotsman Ice Systems

Figure 47-41. This ice machine microprocessor-based controller controls the compressor, regulates ice harvest operations, and performs diagnostic functions.

Copyright Goodheart-Willcox Co., Inc.

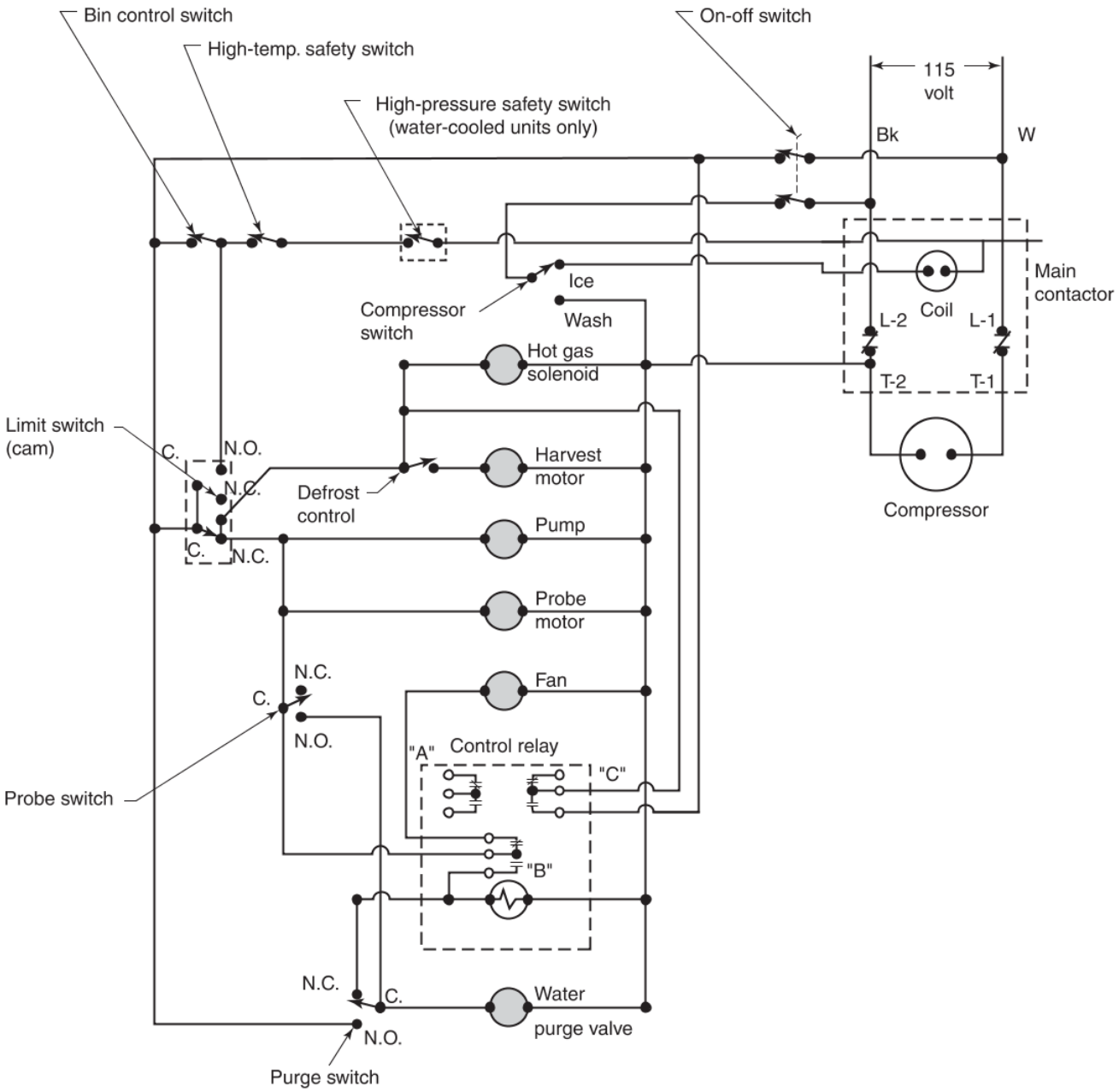

Ice-O-Matic

Figure 47-42. Note the number of devices controlled in this ladder diagram: hot-gas defrost, probe motor, harvest motor, fan, water purge valve, and water pump.

manifold continuously streams water down across the molds where ice gradually forms and builds up. Eventually, ice fills each cell in the mold and connects with the other cubes along their edges.

A sensor monitors ice thickness and informs the control unit when to switch from the refrigeration cycle to the hot-gas defrost cycle for harvesting. Hot-gas from the compressor's discharge line is pumped through the evaporator. Once the sheet of ice cubes is loosened, it falls and breaks apart into individual cubes in the storage bin.

A large portion of ice is used for beverage cooling. Cubed ice is usually created for serving in drinks or may be bagged for bulk sale. These hard cubes are long lasting. However, ice in other shapes and sizes is frequently desirable.

Copyright Goodheart-Willcox Co., Inc.

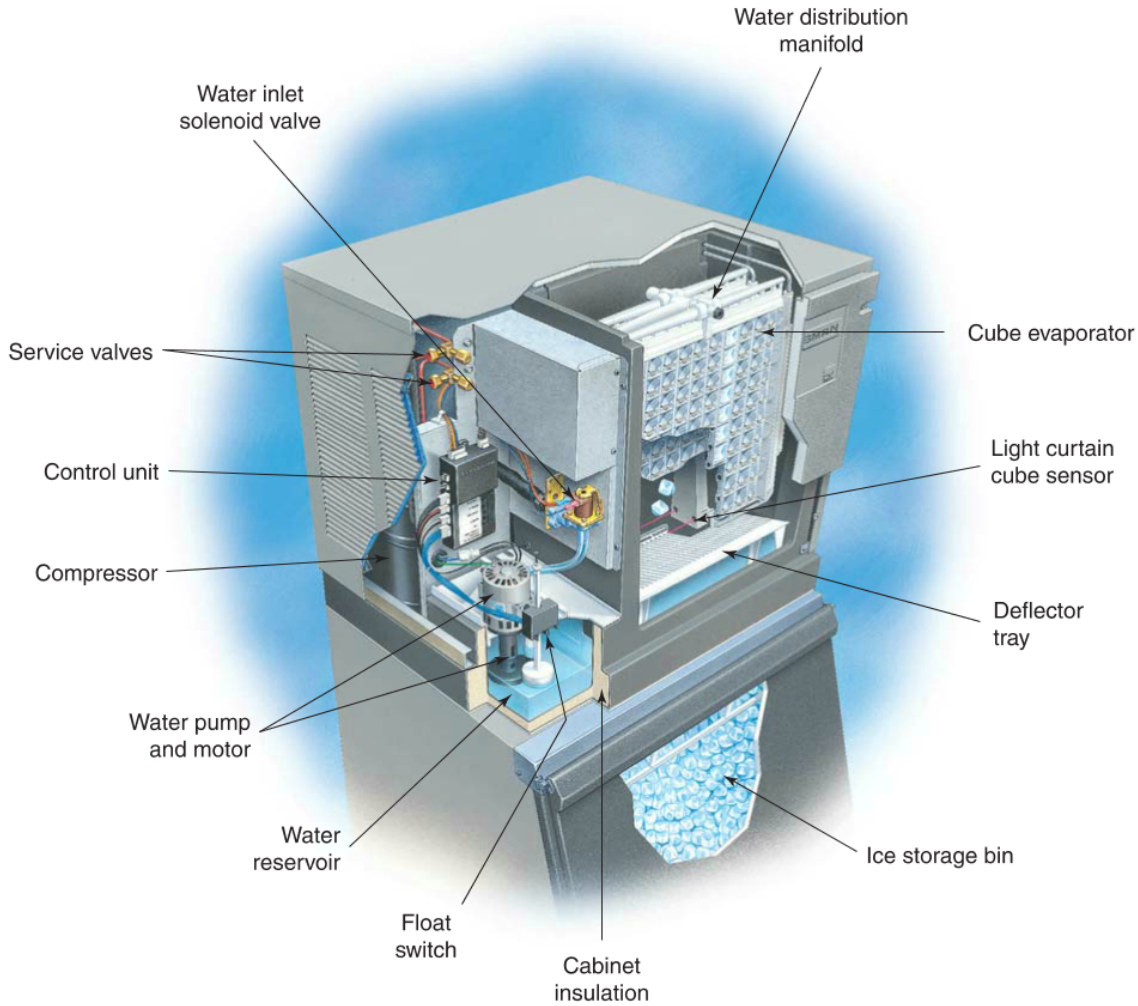

Scotsman Ice Systems

Figure 47-43. In this vertical cube evaporator ice machine, water flows into the top of the evaporator and over cube molds. Finished cubes fall into the ice storage bin below.

Inverted Cube Evaporators

Another method of producing cubed ice uses an evaporator above an inverted mold. Cold water is sprayed upward into the inverted molds. The temperature of the molds is cooled very low by the nearby evaporator coils. Water strikes the mold surface and freezes there, **Figure 47-44**.

Frozen water gradually builds up until complete ice cubes are formed. Next, the ice cube molds are warmed until the cubes fall out. The warming is done by electric heating elements or hot-gas defrosting. The cubes drop down onto a deflector trap, slide through a chute, and arrive in the ice cube storage bin. This ends the ice production cycle. Review the system diagram in **Figure 47-45**.

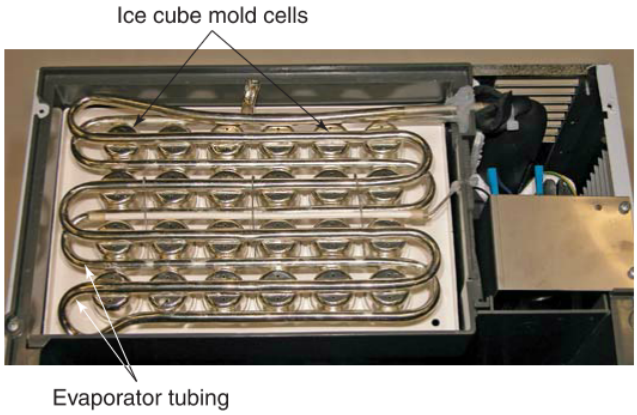

Scotsman Ice Systems

Figure 47-44. Evaporator tubing runs on top of and alongside ice mold cells in this cube ice machine.

Copyright Goodheart-Willcox Co., Inc.

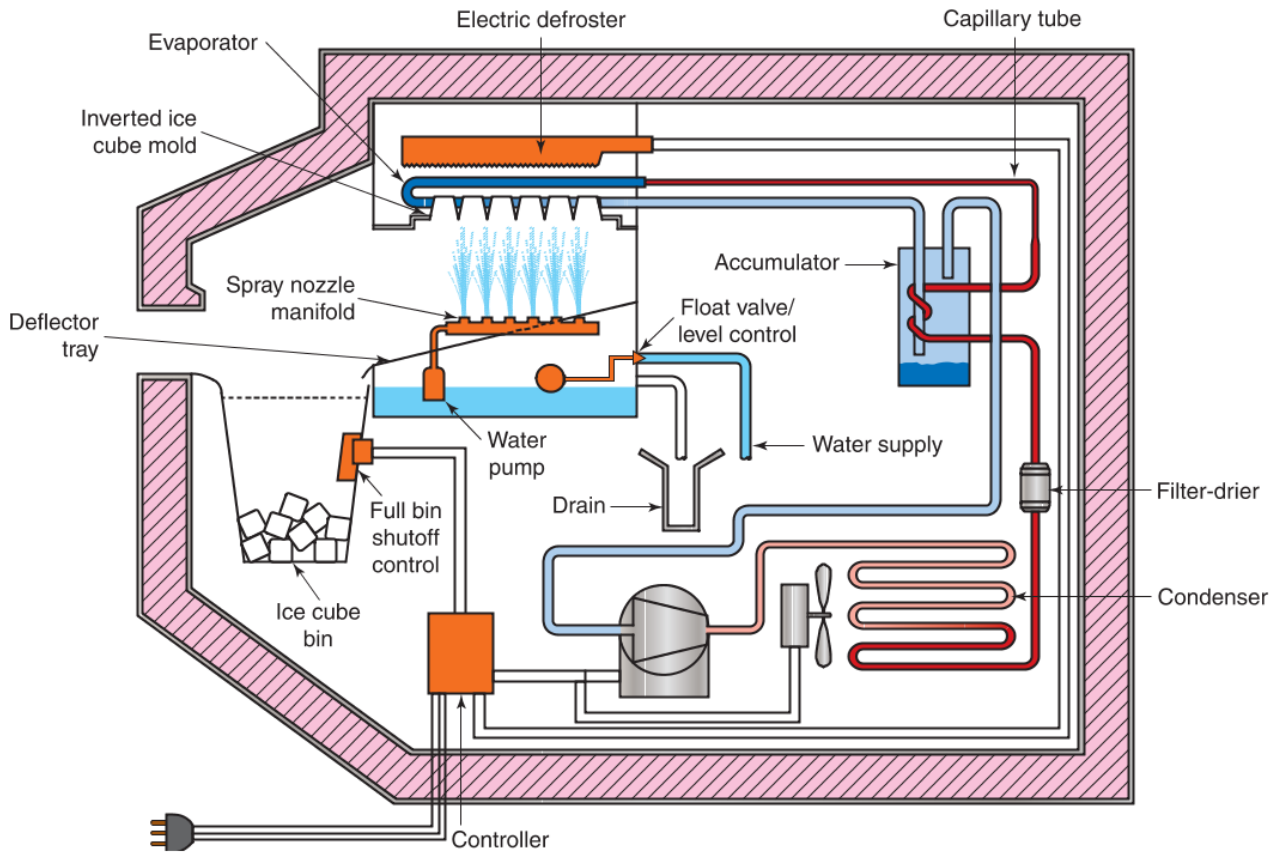

Goodheart-Willcox Publisher

Figure 47-45. In an ice machine with an inverted mold evaporator, water is sprayed upward into ice cube molds to produce clear ice cubes.

Flaked Ice Evaporators

Flaked ice is preferred for cooling produce, fish, and poultry. It can be packed tightly around an item and will maintain the freshness of the product even as the ice melts.

Ice machines that produce ice flakes have evaporators unlike those of cube ice machines. In a flake ice machine, water fills a cylindrical evaporator at 0°F (–18°C) that freezes the water very rapidly. A heavy steel auger driven by an electric motor cuts and scrapes ice from the surface, **Figure 47-46**.

Figure 47-47 shows a diagram and a photo of a flake ice machine. Water from a reservoir enters the evaporator at the water inlet and fills to the level control in the water reservoir. Water freezes, and the auger rotates to cut and move the flaked ice upward. Above the auger, the flaked ice is directed into a chute where it drops into a storage bin. When the bin is full, a sensor or switch shuts off the machine until needed again. **Figure 47-48** is a ladder diagram for a flake ice machine.

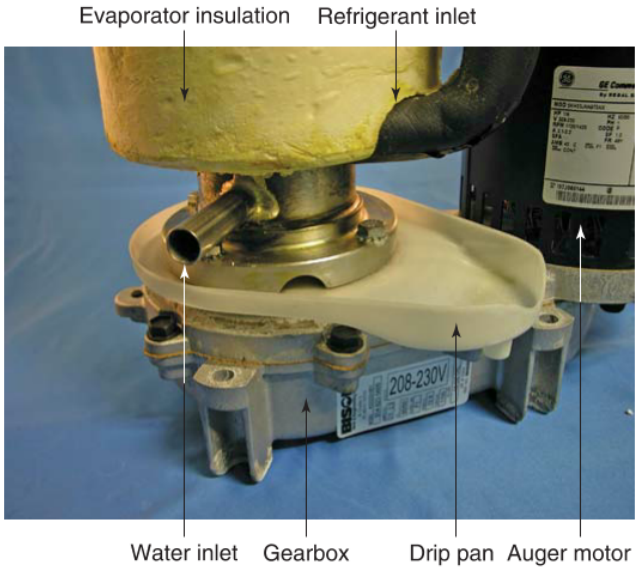

Scotsman Ice Systems

Figure 47-46. The bottom of a flaked ice machine's evaporator with some insulation removed. Water flows in through the inlet to fill the evaporator. This evaporator's auger connects to its motor from below through a gearbox.

13

Copyright Goodheart-Willcox Co., Inc.

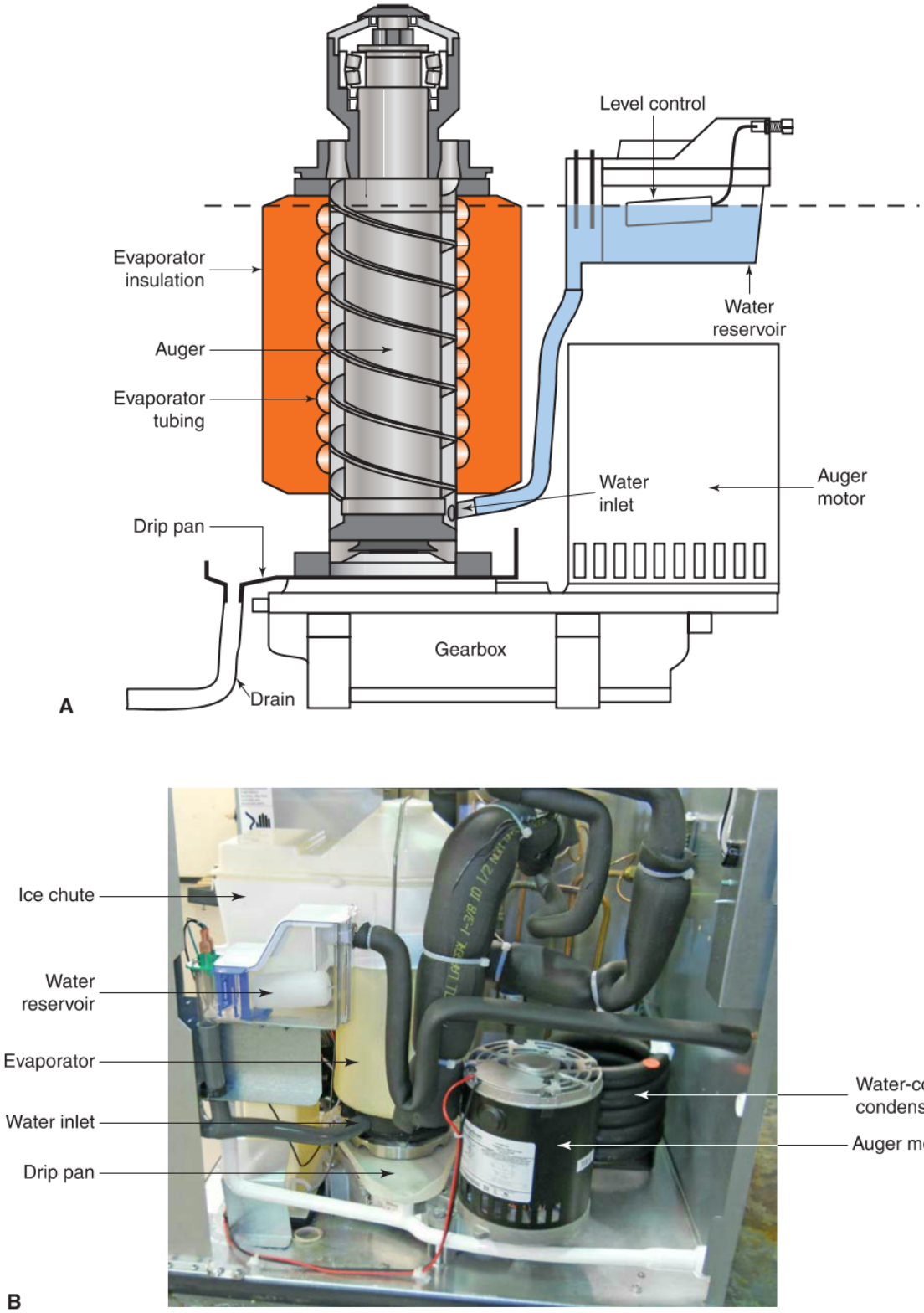

Scotsman Ice Systems

Figure 47-47. A—Diagram showing the working parts of a flake ice machine. B—With panels removed, a flake ice machine's components are accessible.

Copyright Goodheart-Willcox Co., Inc.

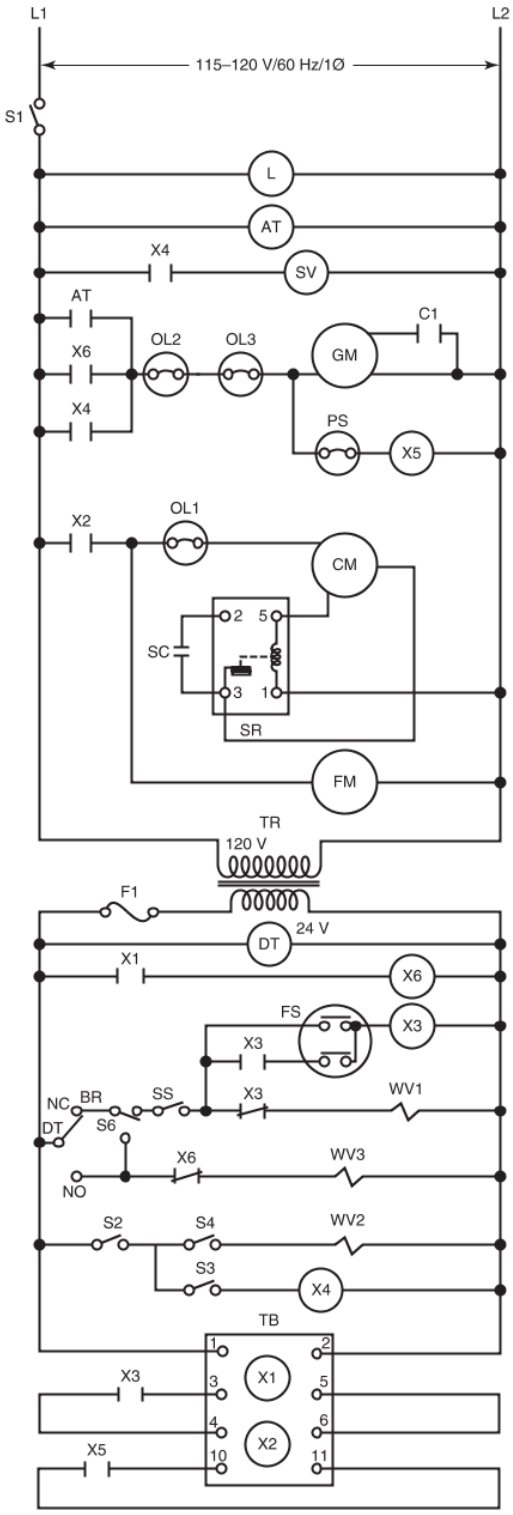

S1	Power switch
S2	Ice & water switch
S3	Ice switch
S4	Water switch
S5	Bin control switch
S6	Ice making switch
PS	Pressure switch
F1	Fuse
L	Power lamp
X3	Water control relay
X4	Ice dispensing relay
X5	Gear motor protect relay
SV	Shutter-solenoid valve
WV1	Control water valve
WV2	Dispense water valve
GM	Gear motor
CM	Compressor
SR	Starter
SC	Start capacitor
FM	Fan motor
TR	Transformer
FS	Float switch
TB	Control timer
C1	Capacitor–GM
OL1	Thermal protector–CM
OL2	Motor protector–GM
OL3	Thermal protector–GM
DT	Drain timer
AT	Agitation timer
WV3	Drain water valve
X6	Drain control relay

Hoshizaki America, Inc.

Figure 47-48. The identification chart on the right helps the service technician identify specific components in this ladder diagram of an ice machine.

13

Copyright Goodheart-Willcox Co., Inc.

Like flake ice machines, extruded cubelet ice machines use an auger in their evaporators. Cubelet ice machines are frequently used in fast-food restaurants. These small commercial units produce an extruded cubelet of ice rather than a solid cube. Cubelet ice machines are very similar to flake ice machines, but these machines compress the ice flakes into small cubelets before dispensing them.

47.3 Industrial Applications

Refrigeration has a variety of applications in industrial and manufacturing processes. The production of high concentrations of heat is often the result of many industrial processes. To minimize or eliminate the negative consequences that could result from high heat, refrigeration is often incorporated into the process.

47.3.1 Industrial Processes

While refrigeration is often concerned with food preservation, it can also be used in manufacturing and industrial processing. A few common uses include the following:

- Cooling of water, which, in turn, cools electrodes on resistance welders.
- Cooling of quenching liquids used to cool metals in heat-treating applications.
- Cooling compressed air.

Since moisture may rust and corrode air tools or spoil paint spraying, compressed air must be dry. Therefore, air is cooled to keep the coldest spot in the air system below air's dew point. Remember that a gas's *dew point* is the temperature at atmospheric pressure at which water begins condensing. Cooling the air below that temperature prevents moisture from forming in the lines.

Remember that Gay-Lussac's law states that in a fixed volume, as pressure rises or falls, temperature correspondingly rises or falls. Therefore, gas in a fixed volume at a higher pressure will have a higher temperature dew point.

Pressure dew point is the temperature at which moisture condenses in pressurized air (air that is not at atmospheric pressure). In industrial compressed air systems, a refrigeration system cools the compressed air below its pressure dew point. Then the air is reheated. Pressure dew points are about 50°F (28°C) above atmospheric dew points at 100 psi (700 kPa) air pressure. Generally, the compressed air is cooled to about 35°F to 50°F (2°C to 10°C). A 3000 cfm (1.42 m^3/s) air compressor will need a refrigeration system with about 20 tons (55.2 kW) of cooling capacity.

Caution

Explosion-Proof Systems

Safety refrigerators and explosion-proof refrigerators are used for flammable liquid and substance storage. Ordinary household refrigerators are not appropriate. Standard refrigerator components (thermostat, relays, and switches) can cause a spark capable of igniting vapors from flammable liquids. Do not locate flammable storage refrigerators in areas containing explosive vapors. However, chemicals that produce explosive vapors can be stored inside these systems.

Refrigerators and freezers of all types are used in research. They are used to maintain constant temperature, constant humidity, and low-temperature control. Low-temperature units are capable of maintaining –140°F (–96°C). These systems usually use 5″ (13 cm) of insulation and a cascade refrigeration system. A cascade refrigeration system is two refrigeration systems connected in series with one system's evaporator absorbing heat expelled by the other system's condenser. For more information on cascade refrigeration systems, see Chapter 49, *Commercial Refrigeration System Configurations*.

47.3.2 Industrial Freezing of Foods

Refrigeration of food is commonly seen in home kitchens and grocery stores. However, the refrigeration of food occurs before such food products even hit the shelves. Industrial freezing of food is performed in two principal types of establishments:

- Processing plants.
- Locker plants.

Processors of frozen foods have freezing centers in many large food-producing areas. For example, fish is packed and frozen along a seacoast and then shipped to all parts of the country.

A ***locker plant*** is smaller than a processing plant and is designed to prepare, freeze, and store various food products. Refrigeration equipment in processing and locker plants varies considerably. However, the plan for freezing the food is similar.

Figure 47-49 shows the flow of food products through a typical plant. The food is weighed and checked for purity and suitability for freezing. Then, it moves to the processing room. There, meat is cut, fowl cleaned and dressed, vegetables blanched, and

Copyright Goodheart-Willcox Co., Inc.

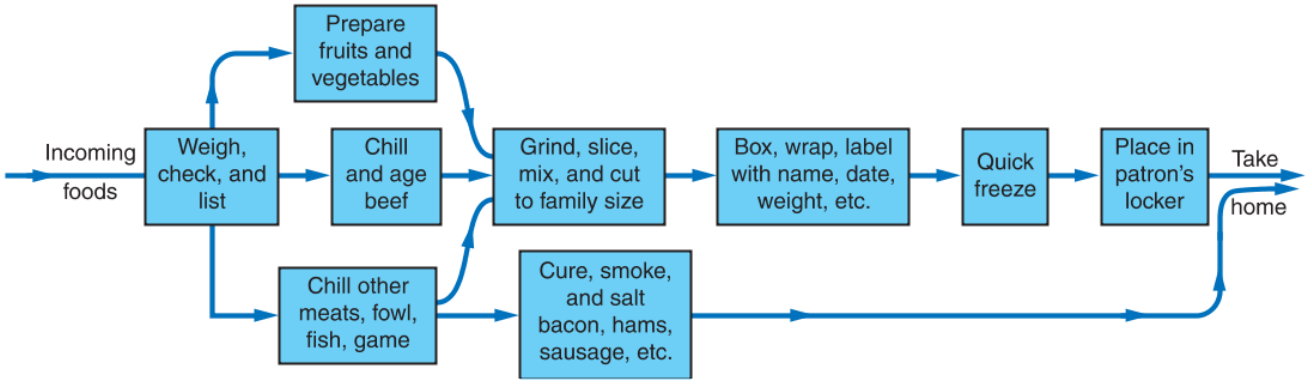

Goodheart-Willcox Publisher

Figure 47-49. Flow chart showing each step for food moving through its preparation process in a freezing plant.

the various items packaged. The packed foods are next sent to the freezing section, where they are completely frozen and readied for storage.

High humidity is very important in rooms where food is cured and stored. Meat tastes better and keeps its weight if relative humidity is kept close to 100%. The temperature should be near 39°F (4°C). This gives the best humidity results with a non-frosting evaporator.

A ***processing plant*** freezes food rapidly by exposing as much of the food as possible to the lowest possible temperature using a fast-freezing system. This is usually done by moving produce along a track through an ultra-low-temperature chamber.

Some fast-freezing systems use liquid nitrogen or carbon dioxide. This turns perishable fresh food into long-lasting frozen food. This process is commonly referred to as ***cryogenic food freezing***. Temperatures of –320°F (–196°C) are obtained, causing freezing to be instantaneous. This method of quick freezing causes little or no damage to the food.

Copyright Goodheart-Willcox Co., Inc.

Chapter Review

Summary

- Commercial refrigeration systems may use multiple compressors, condensing units with multiple fans and flow controls, and specialized evaporators based on the build of the cabinet. These systems are found in supermarkets, convenience stores, bakeries, restaurants, and other businesses.
- During periods of low cooling demand, some commercial refrigeration systems form an ice bank. It absorbs heat and prevents system overload during periods of high demand. Generally, ice banks are used in drink dispensers and other liquid-cooling systems.
- Supermarkets, restaurants, and other businesses often have walk-in cabinets, which are large refrigerated spaces with specially insulated walls, doors, and floors. These units can be used to cool or freeze a variety of products. Walk-in cabinets are specially designed and must be installed to meet various building codes.
- Florist cabinets use low-velocity evaporators and refrigeration systems that maintain specific temperature and humidity requirements to prolong product quality. Special filters (EGF) are used to remove ethylene gas that would otherwise accelerate plant aging.
- Hot and cold merchandisers are commercial units built with two separate temperature compartments. One section keeps products cool, and the other section keeps products warm.
- Display cases can be used to refrigerate or freeze products and can be open or closed. Open display cases may use one or more air curtains to thermally isolate products from ambient air. An air curtain is a stream of air that blows between a conditioned space and an unconditioned space to isolate the two areas.
- Quick chillers, blast chillers, and blast freezers cool cooked food quickly for storage.
- Beverage dispensers chill products passively with ice or actively using mechanical refrigeration. Water coolers chill drinking water using a compact mechanical refrigeration system. Milk coolers are large refrigerated tanks used to cool milk after being taken from a cow. Flow controls and precooling heat exchangers reduce the heat load prior to storage.
- Ice machines may form small ice nuggets, ice flakes, or ice cubes in a variety of sizes. The design of the evaporator determines the shape of the ice produced. Common ice machine evaporators include vertical cube, inverted cube, and flaked ice (auger).
- Other than food processing, industrial applications of refrigeration include cooling water used to cool welding electrodes, cooling of quenching liquids used for heat-treating, and cooling of compressed air.
- Processing plants and locker plants prepare, freeze, and store various food products in bulk. Cryogenic food freezing is the use of liquid nitrogen or carbon dioxide to instantly fast-freeze and preserve perishable food at temperatures of –320°F (–196°C).

Review Questions

Answer the following questions using the information in this chapter.

1. A parallel compressor rack is an arrangement of compressors piped in parallel sharing the following devices in common, *except* a(n) _____.
   A. air curtain
   B. liquid line
   C. liquid receiver
   D. suction line
2. A distributed system is a commercial refrigeration unit that circulates refrigerant through nearby coolers and contains only _____.
   A. compressors
   B. condensers
   C. evaporators
   D. refrigerant metering devices
3. During periods of low cooling demand, some liquid-cooling refrigeration systems form a solid block of ice around the evaporator called an _____.
   A. ice advantage
   B. ice bank
   C. ice block
   D. ice cube

Copyright Goodheart-Willcox Co., Inc.

4. The rapid controlled cooling of cooked food to inhibit bacteria and germ growth is performed by _____.
   A. blast chillers and quick chillers
   B. blast dispensers and quick merchandisers
   C. distributed systems and ice machines
   D. open and glass-enclosed display cases
5. Floral refrigeration systems typically use a(n) _____ evaporator to account for floral item fragility.
   A. flooded
   B. high-velocity
   C. immersed
   D. low-velocity
6. Open display cases and some glass-enclosed display cases use a(n) _____, which is a stream of air that blows between a conditioned space and an unconditioned space to isolate the two areas.
   A. air barrier
   B. air curtain
   C. blast chiller
   D. sneeze guard
7. A beverage dispenser that cools its dispensing liquid using the same ice that is dispensed for drinks is _____ chilled.
   A. actively
   B. cryogenically
   C. passively
   D. subcooler
8. A water cooler that has a plumbed water supply and drain connections is a(n) _____ water cooler.
   A. ice
   B. self-contained
   C. tap
   D. walk-in
9. A standalone water cooler that has its own water supply from a tank and does not have a drain is a(n) _____ water cooler.
   A. ice
   B. self-contained
   C. tap
   D. walk-in
10. Refrigeration systems that cool or fast-freeze and then dispense a mix for consumption are _____.
   A. dispensing freezers
   B. ice machines
   C. milk dispensers
   D. processing plants
11. Refrigeration systems that cool fresh milk to the legally required temperatures in a large tank are _____.
   A. blast chillers
   B. milk coolers
   C. milk dispensers
   D. ultraviolet coolers
12. An ice machine that produces flaked ice has an evaporator that uses a(n) _____.
   A. auger
   B. extruding process
   C. inverted mold
   D. vertical evaporator and mold
13. An ice machine that distributes flowing water using a manifold also uses a(n) _____.
   A. auger
   B. extruding process
   C. inverted mold
   D. vertical evaporator and mold
14. Ice machine controls used for bin capacity include the following, *except* a _____.
   A. diaphragm or mechanical lever switch
   B. float control and solenoid valve
   C. photo sensor
   D. temperature-sensing bulb
15. The process of fast freezing food using liquid nitrogen or carbon dioxide is called _____.
   A. blast cooling
   B. cascade preservation
   C. cryogenic food freezing
   D. ice bank freezing

Copyright Goodheart-Willcox Co., Inc.

CHAPTER 48 Special Refrigeration Systems and Applications

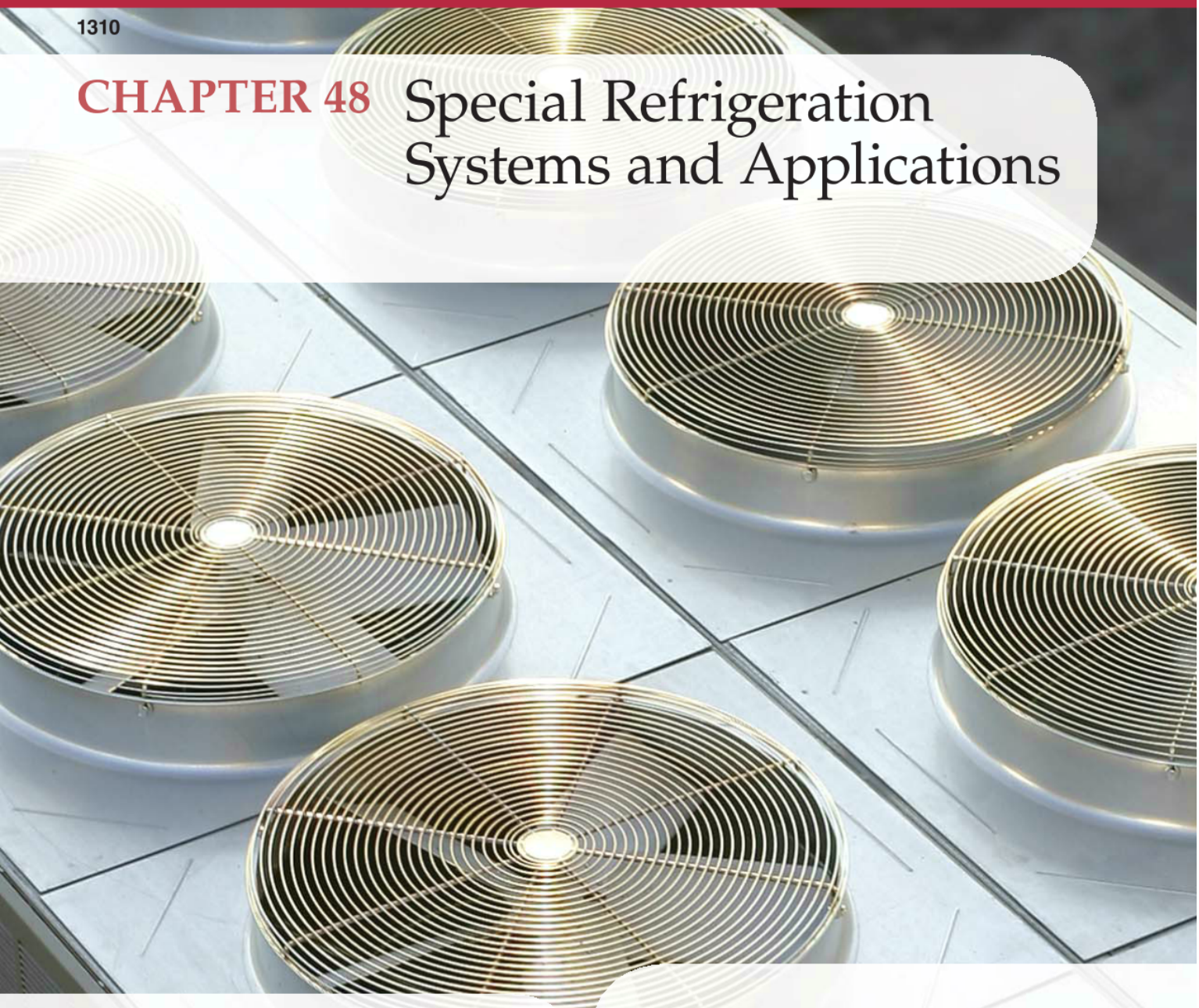

Chapter Outline

48.1 Transportation Refrigeration
- 48.1.1 Truck and Trailer Refrigeration
- 48.1.2 Railcar Refrigeration
- 48.1.3 Intermodal Shipping Container Refrigeration
- 48.1.4 Marine Refrigeration

48.2 Alternative Refrigeration Methods
- 48.2.1 Expendable Refrigeration Systems
- 48.2.2 Dry Ice Refrigeration
- 48.2.3 Thermoelectric Refrigeration
- 48.2.4 Vortex Tubes
- 48.2.5 Jet Cooling Systems
- 48.2.6 Stirling Refrigeration Cycle

Learning Objectives

Information in this chapter will enable you to:

- Identify the different types of refrigerant metering devices, evaporators, compressors, and condensers used in transportation refrigeration systems.
- Summarize the operation of various expendable refrigeration systems.
- Explain how thermoelectric couples produce heating and cooling using electricity.
- Summarize the operation of vortex tubes, steam jet systems, and refrigerant jet systems.
- Describe the operation of a basic Stirling refrigeration system.

Technical Terms

dry ice
eutectic plate
keel cooler
Peltier effect
quench valve
refrigerant jet system
standby power
steam jet system
Stirling cycle
sublimation
thermoelectric couple
thermoelectric module
thermoelectric refrigeration
vortex tube

Review of Key Concepts

Reviewing these concepts from earlier chapters will help you understand new concepts presented in this chapter:

- A hot-gas defrost system redirects hot, compressed vapor from the compressor through the evaporator to defrost it. A bypass line equipped with a solenoid valve connects the compressor discharge line to the evaporator inlet. (Chapter 21)
- An expendable refrigerant is used only once in a system and then released into the atmosphere. It is not collected and recondensed for additional refrigeration cycles, as is the case with most compression refrigeration systems. (Chapter 9)
- Rupture discs are protective devices for refrigerant cylinders that are designed to open under excessive pressure, but they do not close again. They allow a cylinder's entire refrigerant charge to vent before the cylinder bursts. (Chapter 10)
- When impurities are added to a pure semiconductor, such as silicon, it is called doping. Doping produces either N-type or P-type material depending on whether the impurity causes an excess or a shortage of electrons in the material. (Chapter 14)
- Electronic circuits include semiconductor devices. These devices can also be called solid-state devices, because there are no moving parts in a semiconductor. They switch roles from acting as an insulator to acting as a conductor on the atomic level, rather than using moving contacts. (Chapter 14)

Introduction

The refrigeration systems that have been described up to this point have mainly been mechanical compression systems used in stationary locations, such as supermarkets. This chapter covers systems that are designed to be mobile, systems used in spaces with limited access, and systems that achieve extremely cold temperatures. Some of the specialized systems covered are adaptations of compression refrigeration systems. Others use methods other than mechanical compression to produce refrigeration temperatures.

Videos

- Transportation Refrigeration
- Dry Ice

48.1 Transportation Refrigeration

There is minimal difference between transportation refrigeration systems and other types of commercial refrigeration systems. Transportation refrigeration systems are designed for various ambient temperatures and operating temperatures. The systems must also be designed to withstand the stress and vibrations that occur during transport. Depending on the type, size, and purpose of the primary refrigeration system, a backup system may be installed to prevent loss of cooling in case the primary refrigeration system fails.

48.1.1 Truck and Trailer Refrigeration

The main components of truck and trailer refrigeration systems are the compressor, air-cooled condenser, thermostatic expansion valve (TXV), and direct-expansion evaporator. These systems typically use 1 1/2 hp to 2 hp (1120 W to 1490 W) compressors and R-134a or R-404A as a refrigerant. Whereas R-134a is used for medium- and high-temperature refrigeration, the properties of R-404A make it suitable for use in medium- and low-temperature applications. Both refrigerants have low toxicity and low flammability, making them safe for transportation refrigeration. Components specific to truck and trailer refrigeration include the following: a quench valve, a subcooler, hot-gas solenoid valves, and vibration absorbers. See **Figure 48-1**.

The ***quench valve*** is a thermostatic expansion valve (TXV) that acts as a liquid injection valve from the liquid line to the suction line. During periods of low load, not much refrigerant is required for cooling, so less refrigerant is passed into the evaporator from the high side.

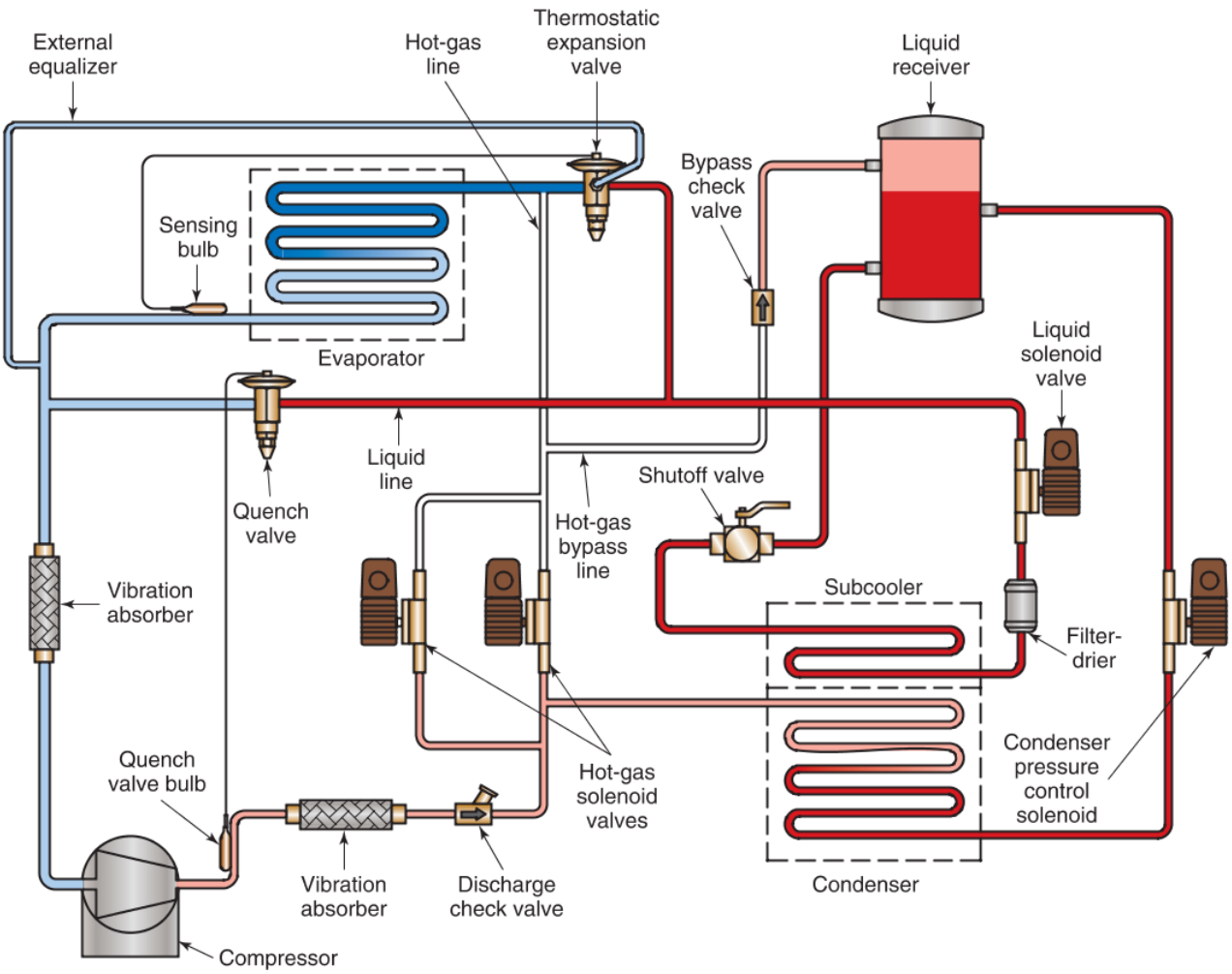

Cooling Cycle

Carrier Transicold Division, Carrier Corp.

Figure 48-1. Diagrams illustrating the cooling cycle and the heat-defrost cycle of a trailer refrigeration system. (*continued*)

Copyright Goodheart-Willcox Co., Inc.

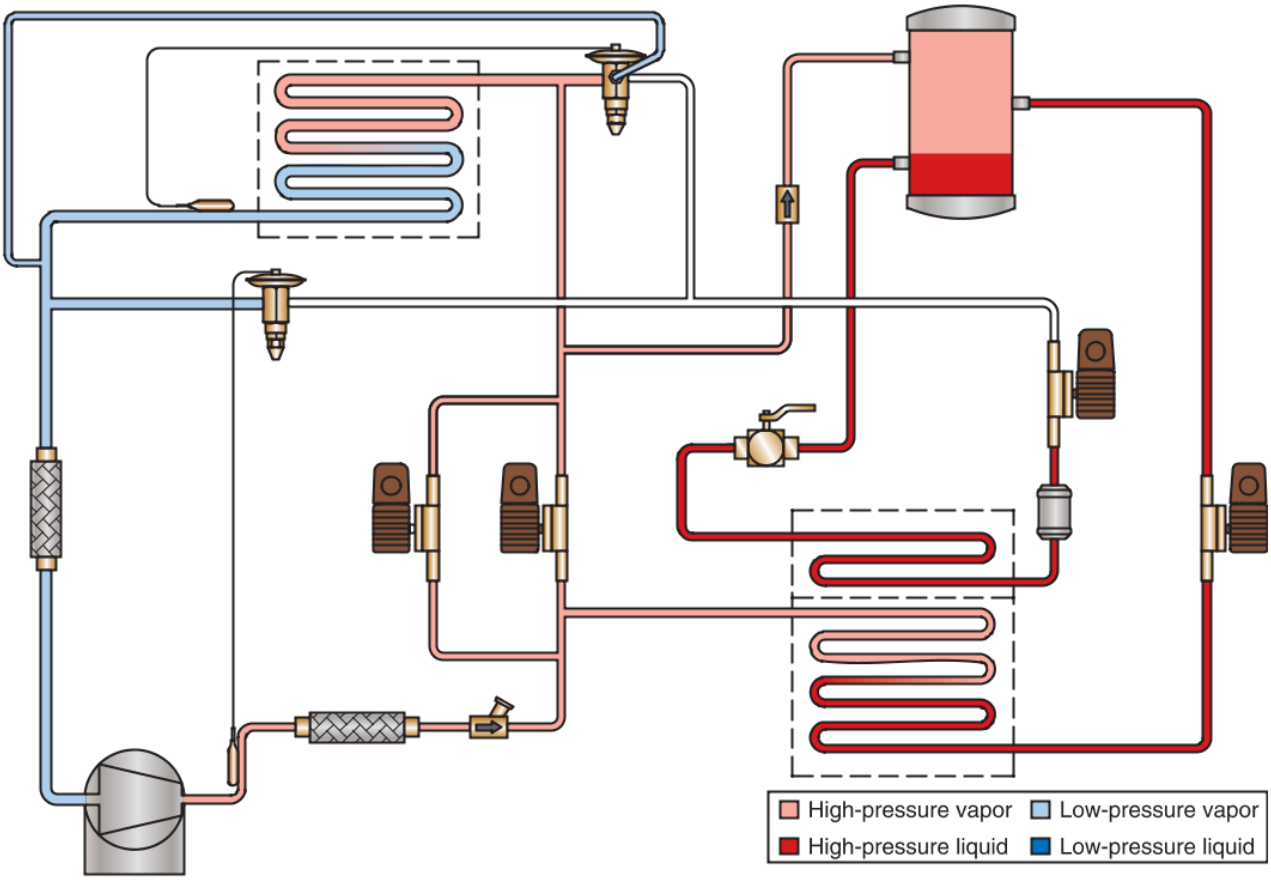

Heat-Defrost Cycle

Carrier Transicold Division, Carrier Corp.

Figure 48-1. Continued.

Remember that suction vapor is often used to cool the compressor. When less refrigerant is available, compressor temperature can rise, and it could begin to overheat. The quench valve monitors this with a sensing bulb on the discharge line. When necessary, the quench valve opens to inject a small amount of liquid refrigerant into the suction line. This refrigerant quickly evaporates and flows into the compressor to cool it.

The subcooler, which occupies a portion of the condenser, removes additional heat from refrigerant leaving the liquid receiver to help ensure that only liquid refrigerant enters the thermostatic expansion valve. Vibration absorbers are placed in the suction and discharge lines to decrease vibration.

When energized, hot-gas solenoid valves open to allow heated vapor refrigerant discharged by the compressor to enter the evaporator. This is done to initiate the heating cycle or defrost cycle. The main difference between heating and defrosting is that the evaporator fans continue to run during the heating cycle to blow air over the evaporator coil. During the defrost cycle, the evaporator fans stop to allow the heated refrigerant vapor to defrost any ice buildup on the evaporator.

Refrigerated Trailers

Refrigerated trailers, also called reefers, require special trailer bodies that are typically 28′ to 53′ (8.5 m to 16 m) long. The trailer bodies should be light and well insulated. The boxes on most refrigerated trailers have fiberglass, composite, or metal walls. Various thicknesses and types of insulation fill the space between the inner and outer walls, depending on the application. Spray foam insulation is most often used. The insulation limits heat transfer through the trailer walls and also gives the trailer body added rigidity. Constant vibration and rough handling may reduce the insulating value of the trailer walls if they are not constructed soundly.

Because there are numerous applications for trailer refrigeration, the trailer must be properly insulated for its intended use. A trailer carrying frozen goods must be insulated for –15°F (–26°C). Fresh foods require insulation for temperatures in the range of 32°F

Copyright Goodheart-Willcox Co., Inc.

to 35°F (0°C to 2°C). Fresh produce, flowers, and fruits also need accurate control of humidity and ventilation because these products have a tendency to lose fluids to the surrounding air.

The refrigeration systems used in most refrigerated trailers are similar to other compression refrigeration systems. The major difference is the method used to drive the compressor. There are two common ways of driving the compressor:

- A diesel-powered generator on a trailer supplies electrical power to the compressor motor. See **Figure 48-2**.
- The refrigeration system is plugged into the electrical grid while the trailer is idle. This is referred to as ***standby power***.

Refrigerated Trucks

Refrigerated trucks are similar to refrigerated trailers. A cube-style or flat-plate evaporator is mounted on the wall inside the box of the truck. The condenser and condenser fans are mounted in a case on the roof or on the front of the box. In small-capacity trucks, the compressor is typically mounted in the engine compartment and driven by the vehicle engine, **Figure 48-3**.

In some larger-capacity trucks, an externally mounted generator provides the power for the compressor, condenser fans, and evaporator fans. Some trucks include both a compressor driven off the vehicle's engine and a separate engine, generator, and standby compressor. Having an external generator allows the refrigeration system to continue running when the vehicle's engine is shut down. **Figure 48-4** shows a finished installation mounted over a truck cab.

A remote control module inside a refrigerated truck allows the driver to control the refrigeration system. The remote control module includes an electronic temperature controller, temperature selector, and defrost controls. Most truck refrigeration systems use hot gas for the defrost process.

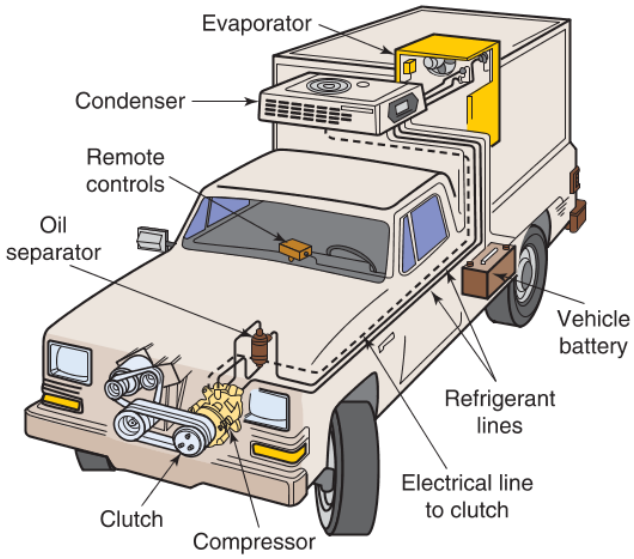

Carrier Transicold Division, Carrier Corp.

Figure 48-3. A refrigerated truck that uses the vehicle's engine to drive the compressor.

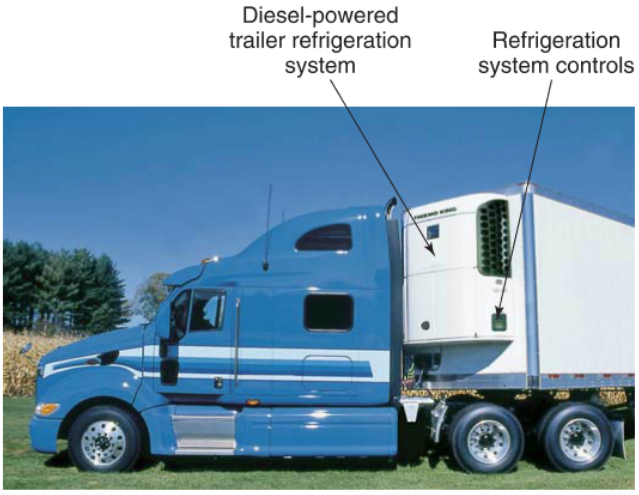

Thermo King Corporation

Figure 48-2. Trailer refrigeration system containing a diesel-powered generator, a compressor, and a condenser. The evaporator extends from the back of the unit into the trailer.

Thermo King Corporation

Figure 48-4. A condensing unit mounted above a truck cab is called a nose-mount or front-mount unit. The unit contains a small engine, a generator, a compressor, and a condenser.

Copyright Goodheart-Willcox Co., Inc.

Eutectic Plates

Another type of truck and trailer refrigeration system uses eutectic plates to provide passive refrigeration. A ***eutectic plate*** is a thin, rectangular tank containing an evaporator surrounded by a solution that freezes at a desired temperature. Refrigerant flow through the evaporator freezes the solution, called a eutectic solution. Once the eutectic solution is frozen, the refrigeration system can be shut off, and the eutectic plates alone provide many hours of passive cooling, **Figure 48-5**.

Eutectic plates may be housed inside a shroud with blower fans at the top. The fans draw in warm box air and force it over the surface of the eutectic plate. The air is cooled as it passes over the plate. The chilled air then exits through the bottom of the housing and circulates throughout the box.

The condensing unit for a refrigeration system with eutectic plates may be permanently mounted on a truck, like the nose-mount units already described. However, for smaller delivery trucks that return to the shop at the end of the day, the condensing unit is often a small, portable unit that is separate from the truck.

When the truck has completed its deliveries for the day and returns to the shop, the portable condensing unit is connected to the eutectic plate. The condensing unit contains a compressor, condenser, filter-drier, and metering device. The ends of the evaporator coil protrude from the eutectic plate and are equipped with quick-connect fittings. The quick-connect fittings allow the condensing unit to be connected and disconnected from the evaporator without refrigerant loss, **Figure 48-6**.

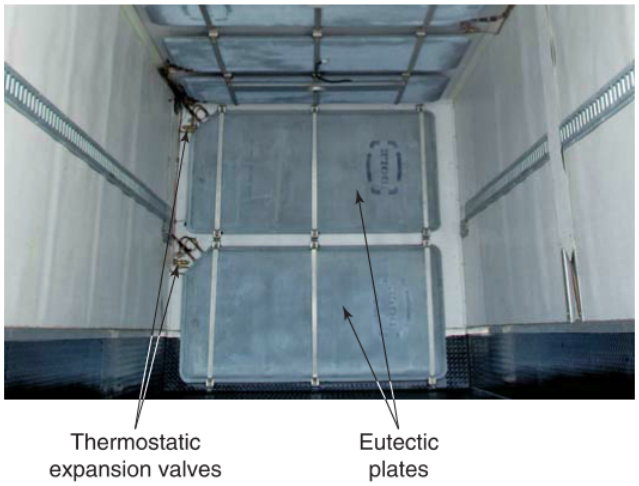

Transcold Distribution, Ltd.

Figure 48-5. A trailer equipped with multiple eutectic plates. Note the thermostatic expansion valves on each plate, which meter the refrigerant flow to the evaporators contained inside the plates.

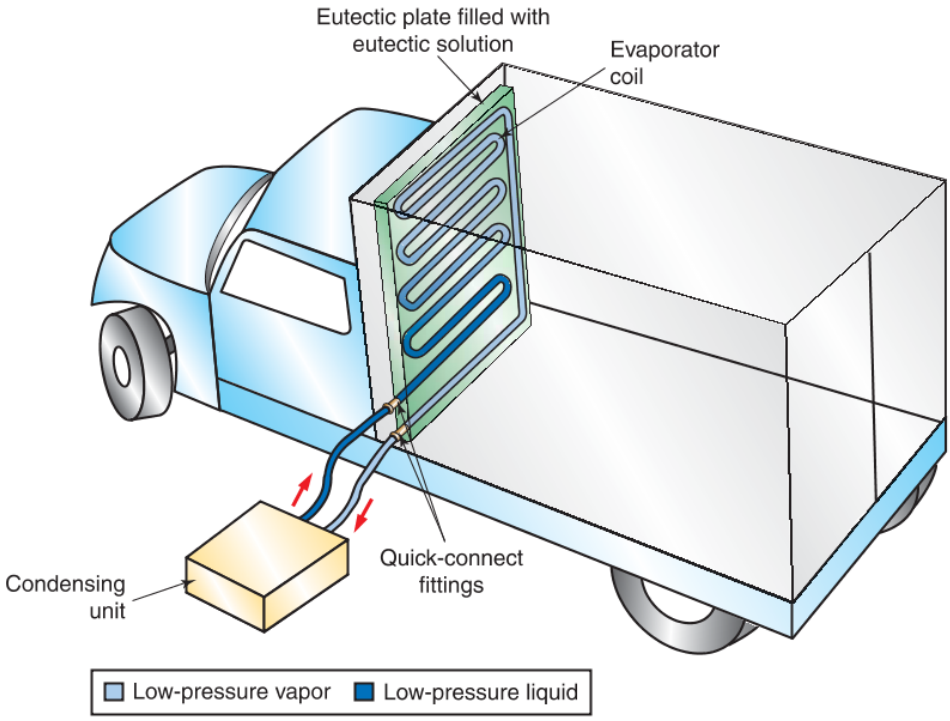

Goodheart-Willcox Publisher

Figure 48-6. Eutectic plate installed in a refrigerated truck. At night, a condensing unit is connected to the eutectic plate and circulates refrigerant to freeze the eutectic solution inside the plate. In the morning, the condensing unit is disconnected.

Copyright Goodheart-Willcox Co., Inc.

The condensing unit is allowed to operate through the night, circulating refrigerant through the evaporator to freeze the eutectic solution. As refrigerant vaporizes inside the evaporator coil, heat is absorbed from the eutectic solution. As sensible heat is removed from the eutectic solution, the temperature of the solution falls. When the freezing point of the solution is reached, additional latent heat is absorbed from the solution as it freezes. In the morning, when the solution in the eutectic plate is fully frozen, the plate is disconnected from the condensing unit. Throughout the rest of the day, the eutectic plate absorbs heat from inside the truck box as the eutectic solution slowly melts. At night, the truck returns to the shop to repeat the process.

Pro Tip

Eutectic Plate Terminology

Eutectic plates are also commonly referred to as cold plates, holding plates, and hold plates.

48.1.2 Railcar Refrigeration

Railcar refrigeration is used for two general purposes: to refrigerate cargo and to provide comfort cooling to passengers. Railcar construction and insulation is similar to that of a refrigerated trailer. While most railcar refrigeration is provided by compression refrigeration systems, some railcar refrigeration systems are absorption systems. Others use steam jet systems, which are discussed later in this chapter.

Compressors are usually driven from the railcar axle while the train is in motion. An electric motor is used when the railcar is stopped. Some trailer refrigeration systems with a diesel-powered generator and motor-driven compressor have been modified to be used in railcars. These systems are very similar to the one shown in **Figure 48-2**. The main differences are additional structural elements to protect the refrigeration system and the use of remote communications (by satellite, cell phone, or radio frequency) to monitor and control the system.

48.1.3 Intermodal Shipping Container Refrigeration

Intermodal shipping containers are used aboard ships, trucks, railcars, and airplanes to transport perishable goods. For short distances, a container can be cooled by a eutectic plate or dry ice. Before the goods are put into the container, the eutectic solution is frozen using a detachable condensing unit. Once frozen, the eutectic solution provides enough cooling capacity to keep the cargo at the desired temperature for the short time the shipment is in transit.

Pro Tip

Intermodal Shipping Container Dimensions

The International Standards Organization (ISO) has issued standards for the dimensions of intermodal shipping containers. The most common lengths are 20′, 40′, and 45′. The height may be 8′-6″ or 9′-6″, and the width is typically 8′.

For longer trips, intermodal shipping containers require a compression refrigeration system to keep the cargo at the desired temperature. The condensers in most shipping container refrigeration systems are water cooled because there may be inadequate airflow for an air-cooled condenser. The compressor is usually driven by a diesel-powered generator on the container. On a ship, the container can be plugged into the ship's power. For warehouse or dock storage, the local power grid may be used to power the container's refrigeration system, **Figure 48-7**.

48.1.4 Marine Refrigeration

Marine refrigeration equipment is basically the same as land-based refrigeration equipment, but designed for the marine environment. System components must also be designed to withstand exposure to saltwater and high humidity. The demands of the marine environment have led to increasingly

Carrier Transicold Division, Carrier Corp.

Figure 48-7. An intermodal shipping container equipped with a compression refrigeration system.

Copyright Goodheart-Willcox Co., Inc.

specialized designs, especially for smaller systems used on yachts. Many yachts, especially sailboats, are constrained by the amount of available electrical power. The most efficient systems use hermetic compressors that can operate on the power supplied by a solar panel. An important aspect to consider in all marine applications is that the available space on a ship or boat for refrigeration equipment is limited, **Figure 48-8**.

Refrigerated storage spaces aboard yachts, commonly called cold boxes, are frequently exposed to tropical conditions. The cold box insulation and refrigeration system are often sized for 90°F (32°C) ambient conditions. As a result, the recommended insulation values are R-20 for refrigerator space and R-30 for freezer space. This can be achieved with 4″ (10 cm) of conventional foam insulation around the refrigerator or 6″ (15 cm) around the freezer. However, many insulating foams, such as polyurethane and polyisocyanurate foams, absorb water easily. If these materials become wet, they lose much of their insulating ability. Extruded polystyrene is preferred as an insulating material for marine applications because it does not absorb water.

The required thicknesses of insulating foams for good thermal performance take up valuable space in a space that is already limited. In some cases, adequate space is unavailable. To solve this dilemma, a technician can use vacuum insulation panels for cold box insulation because of their ability to save space while still maintaining R-values ranging up to R-50. Vacuum insulation panels allow for much thinner box walls, which can double or triple the usable space in a given box. The material is also stable and can provide good thermal performance for the life of the boat.

Cold boxes should be designed to minimize the damage that can occur to them during use. Any damage to the cold box's exterior can lead to unwanted condensation, especially around hatches and behind cushions. Access lids and doors should have latches to prevent spillage of the box contents when rough weather is encountered.

Marine refrigeration systems are typically assembled from converted industrial or automotive refrigeration or air-conditioning equipment. Although there is some mixing of types, larger systems tend to use open-drive compressors and eutectic plates while smaller systems are more likely to use flat-plate evaporators and hermetic compressors, similar to the type used in domestic refrigerators. See **Figure 48-9**.

There are three common methods for cooling a system's condenser. An air-cooled condenser is the

Transducers Direct, LLC

Figure 48-8. Refrigeration and air-conditioning equipment on marine vessels must be sized to fit into the limited available space.

Copyright Goodheart-Willcox Co., Inc.

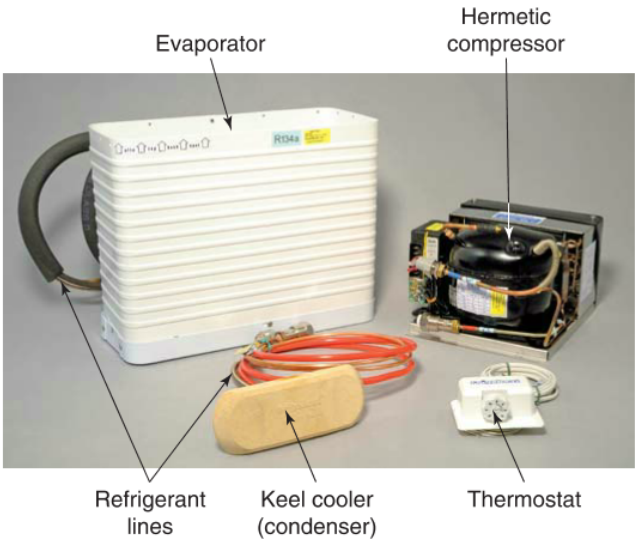

Veco NA – Coastal Climate Control, Inc.

Figure 48-9. An evaporator, keel cooler, and small hermetic compressor used to refrigerate marine cold boxes.

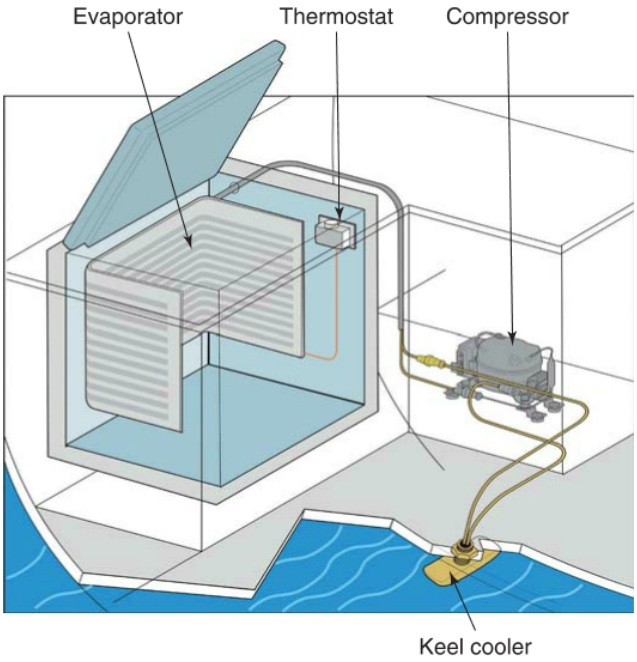

Veco NA – Coastal Climate Control, Inc.

Figure 48-10. A keel cooler houses the condensing coil and releases heat from high-side refrigerant into the surrounding water.

least expensive. However, as the ambient air temperature increases, the amount of energy required by the compressor to maintain high enough head pressure for proper cooling becomes excessive. Water is about 20 times more thermally conductive than air, and an endless supply is available on the other side of the boat's hull. For these reasons, many boats use keel coolers or heat exchangers cooled by pumped-in seawater.

Keel coolers run the condenser tubing outside the hull in the vicinity of the keel to take advantage of seawater's ability to absorb heat. Keel coolers must be properly sized for their application. If a keel cooler is oversized, it may operate efficiently in warm water but provide too much subcooling when the boat is in cold water. If a keel cooler is undersized, the head pressure can become excessively high in warm water, leading to high energy use, **Figure 48-10**.

Unlike standard air-cooled condensers at a residence or on top of a building, keel coolers are submerged in water. This subjects them to a wide range of temperature and any chemicals or substances that may be in the water. Many keel coolers are equipped with zinc anodes to minimize corrosion of the condensing coil's housing. See **Figure 48-11**.

Heat exchangers provide economical operation across a wide range of operating temperatures. A pump draws in water through an inlet in the hull of the boat. The water is passed through a heat exchanger where it absorbs heat from high-pressure refrigerant inside the compressor's discharge line. The heated water is then released back outside the boat. See **Figure 48-12**.

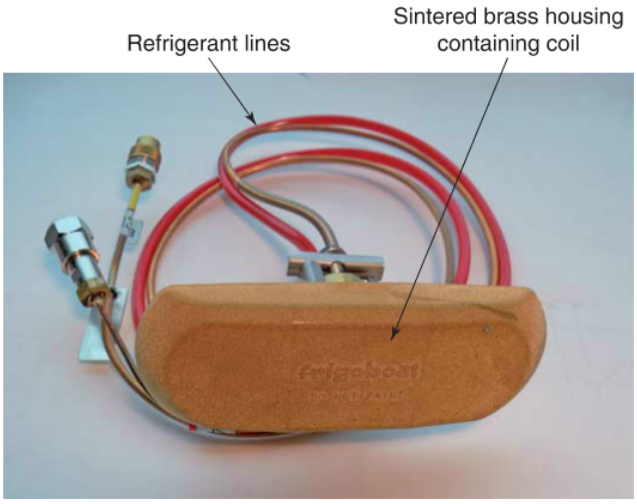

Veco NA – Coastal Climate Control, Inc.

Figure 48-11. A keel cooler often encloses its condensing coil in a protective housing.

Copyright Goodheart-Willcox Co., Inc.

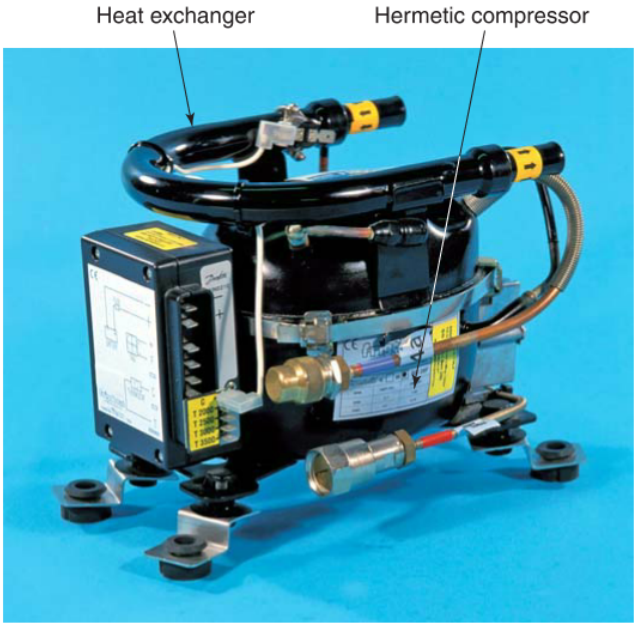

Water-Cooled Heat Exchanger

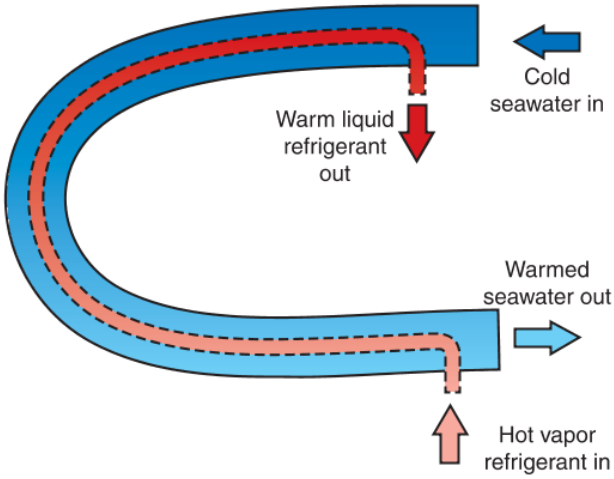

Top View of Heat Exchanger

Veco NA – Coastal Climate Control, Inc.; Goodheart-Willcox Publisher

Figure 48-12. Some marine refrigeration systems pump seawater through a heat exchanger tube on the compressor. The compressor's discharge line is enclosed within the heat exchanger tube to allow heat transfer over the entire surface of the discharge line.

48.2 Alternative Refrigeration Methods

To this point, the focus of this book has been largely on compression and some absorption refrigeration systems. However, a number of different refrigeration methods have been developed to meet specific commercial and industrial refrigeration needs. The following sections address some of these alternative refrigeration methods.

48.2.1 Expendable Refrigeration Systems

An expendable refrigeration system, sometimes called an open-cycle refrigeration system, is one in which the refrigerant is discarded after it has evaporated. In one variation of an expendable refrigeration system, liquid nitrogen is sprayed directly into a conditioned space. As the nitrogen evaporates, it absorbs heat from the space and is then vented to the atmosphere. This simple system is used in the storage of refrigerated or frozen foods and in trucks and other vehicles in the transportation industry, **Figure 48-13**.

The liquid nitrogen is kept under high pressure in an insulated cylinder inside the conditioned space. A control box is connected to a temperature-sensing element and to a liquid control valve. When the temperature in the conditioned space rises above the cut-in temperature, the control box operates the liquid control valve, allowing some of the liquid nitrogen out of the cylinder. The pressure of the liquid nitrogen drops as it passes through the restriction in the valve. As the low-pressure liquid nitrogen is forced out through the spray nozzles, it rapidly evaporates into low-pressure nitrogen vapor, absorbing heat from the air inside the conditioned space.

The temperature-sensing element constantly monitors the temperature in the conditioned space and relays information to the control box. With this information, the control box can regulate the liquid control valve to increase or decrease the flow of liquid nitrogen to the spray nozzles as needed. In this way, these devices work together to maintain the desired temperature in the conditioned space.

Because liquid nitrogen evaporates at –320°F (–196°C) at atmospheric pressure, it is well suited for shipping frozen foods. The temperature may be kept as low as desired, usually about –20°F (–29°C). An advantage of expendable refrigeration systems that use liquid nitrogen is their ability to operate without a power source. Also, because of their simple design, these types of expendable refrigeration systems require very little maintenance. However, the liquid nitrogen cylinder must be replaced or recharged periodically.

Containers or spaces refrigerated by liquid nitrogen must be equipped with safety devices to shut off the flow of nitrogen when a person opens a door to the space. Heat surrounding the cylinder may cause the liquid nitrogen inside to evaporate rapidly, increasing

Copyright Goodheart-Willcox Co., Inc.

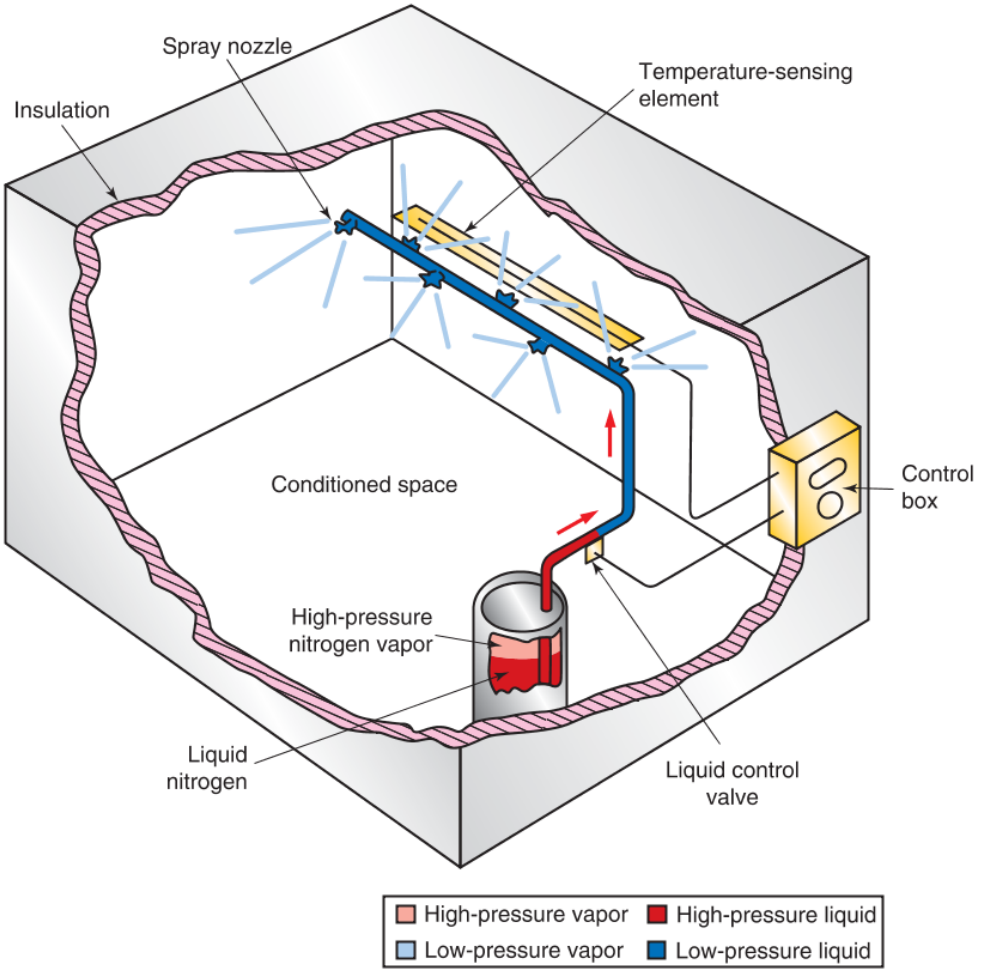

Goodheart-Willcox Publisher

Figure 48-13. One type of expendable (open-cycle) refrigeration system releases liquid nitrogen directly into a well-insulated conditioned space.

the cylinder's internal pressure. If the cylinder pressure rises above a safe limit, an automatic pressure-relief valve on the cylinder opens to allow nitrogen vapor to escape until the cylinder pressure is back below a safe level. Liquid nitrogen cylinders are also equipped with rupture discs. If cylinder pressure becomes excessively high, the rupture disc bursts to vent nitrogen vapor and prevent the cylinder from exploding.

Safety Note

Liquid Nitrogen Safety

Exposure to liquid nitrogen can result in severe burns and frostbite. Always wear a long-sleeve shirt, insulated gloves, and safety goggles or a face shield when handling or operating a liquid nitrogen cylinder. Use a cart, crane, or lift to move the cylinder. Do not roll a liquid nitrogen cylinder. Keep it in a vertical position at all times.

48.2.2 Dry Ice Refrigeration

Dry ice is carbon dioxide (CO_2) frozen solid. It is pressed into various sizes and shapes, typically blocks or slabs. As dry ice absorbs heat, it changes directly from a solid to a vapor. It does not go through the liquid state. The process of a solid changing directly into a vapor is called ***sublimation***. At atmospheric pressure, solid carbon dioxide sublimates at –109°F (–78°C), **Figure 48-14**.

Figure 48-15 shows a common method of using dry ice to refrigerate frozen food. Dry ice is packed either beside or on top of the food packages. As the dry ice changes to carbon dioxide vapor, it keeps the food frozen by absorbing ambient heat. The carbon dioxide vapor replaces the air in the container or cabinet as the dry ice sublimates. This also helps to preserve the food.

One type of expendable refrigeration system, often used on aircraft, uses dry ice as an expendable

Copyright Goodheart-Willcox Co., Inc.

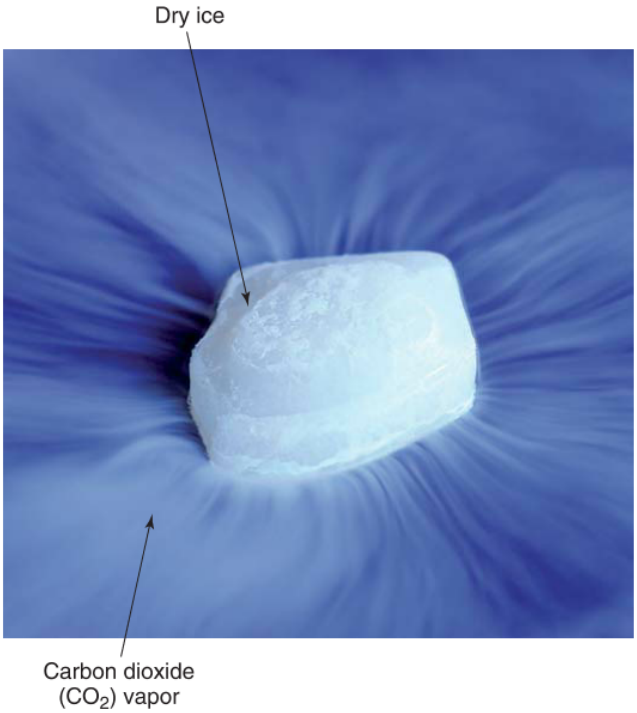

Reika/Shutterstock.com

Figure 48-14. A block of dry ice sublimating. Note that there is no moisture produced as the dry ice sublimates.

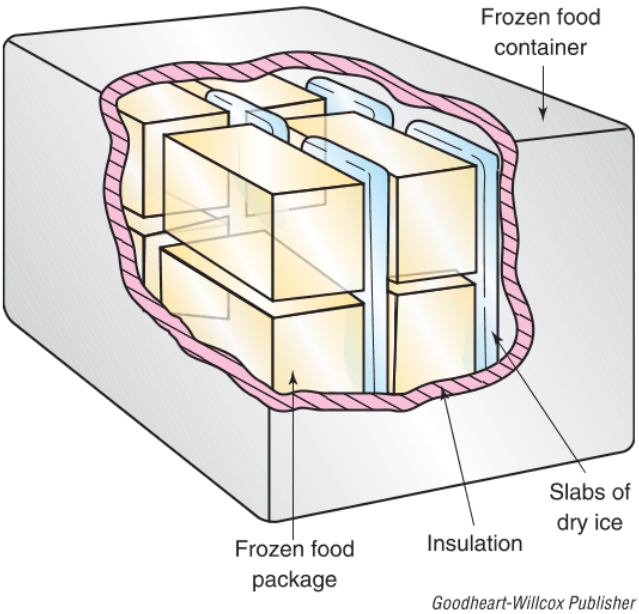

Goodheart-Willcox Publisher

Figure 48-15. As the slabs of dry ice sublimate, they absorb heat and keep the food in the frozen food container cold.

secondary refrigerant in conjunction with a primary refrigerant that is not expended. A closed refrigeration circuit is connected to an evaporator in the conditioned space and to a condenser located in an insulated bin. This heavily insulated bin holds the condenser and dry ice pellets, **Figure 48-16**.

Since dry ice sublimates at a very low temperature (–109°F or –78°C), it causes refrigerant vapor entering the condenser to condense quickly to a liquid. The liquid refrigerant flows by gravity through the condenser and into the evaporator. A thermostatically operated metering device located in the liquid line controls the flow of refrigerant into the evaporator. In the evaporator, the liquid refrigerant absorbs heat as it vaporizes and flows upward into the condenser. At that point, the cycle repeats.

Safety Note

Dry Ice

Always wear heavy, insulated gloves when handling dry ice. Touching dry ice with bare skin can cause severe burns and instant frostbite.

48.2.3 Thermoelectric Refrigeration

Thermoelectric refrigeration is the process of transferring heat energy from one place to another using the movement of electrons. Heat is transferred on a subatomic level using semiconductor devices. In 1834, French physicist Jean-Charles Peltier discovered that when current was passed through the junction of two dissimilar metals, heat was absorbed in one part of the junction and moved to another part of the junction. This phenomenon, called the ***Peltier effect***, is the basis of modern thermoelectric refrigeration.

The thermoelectric refrigeration process removes heat from one area and puts it in another area. Electrical energy, rather than a refrigerant, serves as the heat-transfer medium. Thermoelectric refrigeration requires none of the conventional equipment necessary in a mechanical compression system. There is no compressor, evaporator, condenser, or refrigerant metering device. In fact, there are no moving parts because the cooling process is performed by semiconductors (solid-state components).

Semiconductors are processed into either N-type or P-type materials. N-type materials have a surplus of electrons and a negative (–) charge. P-type materials carry a positive (+) charge because they have electron holes, which are positively charged gaps that are ready to receive electrons. A ***thermoelectric couple*** is formed by connecting one N-type material and one P-type material. See **Figure 48-17**.

When current flows from the P-type material toward the N-type material, the junction where the materials are connected absorbs heat. The opposite end of each segment becomes hot and gives off heat.

Copyright Goodheart-Willcox Co., Inc.

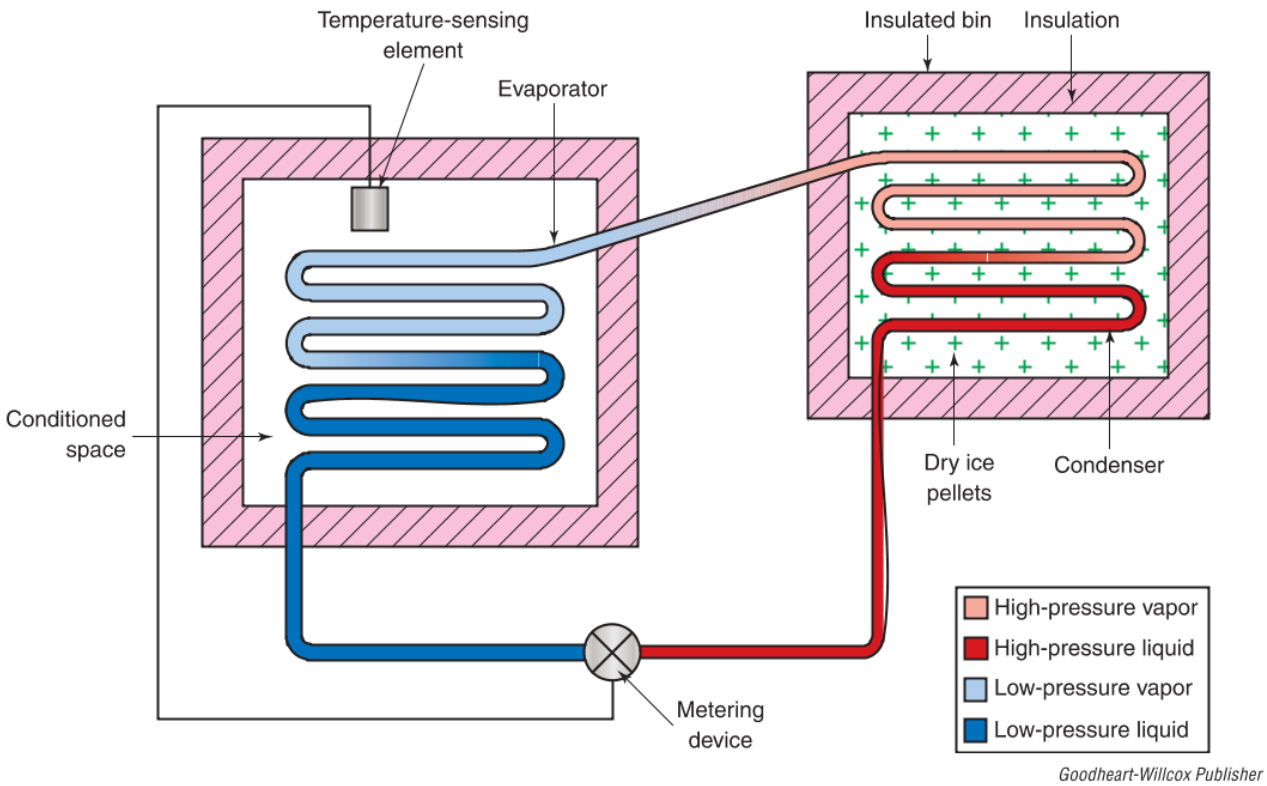

Figure 48-16. One type of expendable refrigeration system uses dry ice in an insulated bin to absorb heat from the condenser. The primary refrigerant flows by gravity and does not require a compressor.

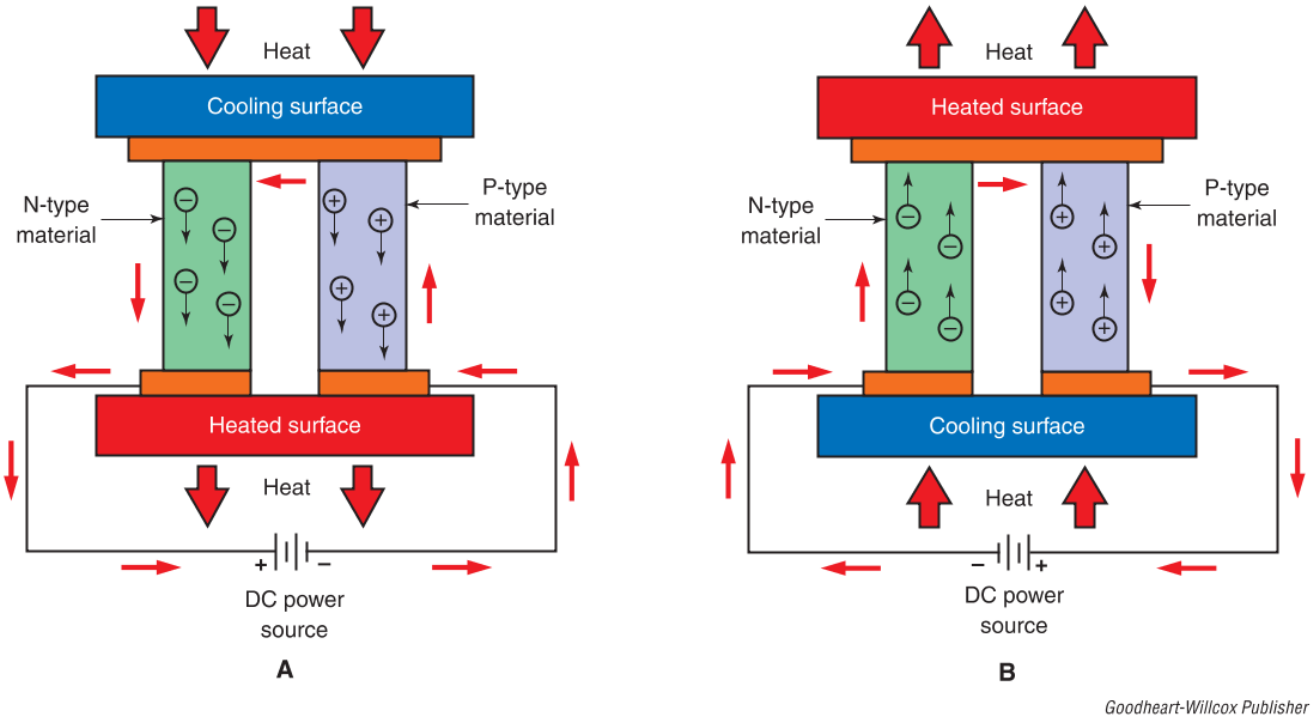

Figure 48-17. Diagram showing how a thermoelectric couple absorbs and rejects heat when current is applied. A—When current from the power source flows from the P-type material to the N-type material, the surface at their junction absorbs heat. B—When the flow of current is reversed, the cooling surface and heated surface are switched.

Copyright Goodheart-Willcox Co., Inc.

Reversing the direction of current through a thermoelectric couple switches the hot and cold surfaces. Thus, the same device can be used for either heating or cooling a conditioned space, depending on the direction of current flow through the device.

Pro Tip

Thermoelectric Couples and Thermocouples

Although both thermoelectric couples and thermocouples are similar in construction, they are not interchangeable. While thermoelectric couples are engineered to move heat when electric current is applied, thermocouples are designed to produce an electric current when heat is applied. Thermoelectric couples operate under the principle of the Peltier effect, and thermocouples operate under the principle of the Seebeck effect.

Since a single thermoelectric couple produces a minimal cooling effect, several thermoelectric couples are connected in series to form a ***thermoelectric module***, which produces significant cooling. Groups of modules can be connected together in parallel to further increase the cooling capacity. Fins on the cooling surface increase its heat flow. Fins on the outside of the heated surface help reject heat into the surrounding air more quickly. A rectifier supplies a controlled dc current to the module, and a thermostat inside the conditioned space controls the current flow through the rectifier. In this manner, the temperature inside the conditioned space is regulated, **Figure 48-18**.

Pro Tip

Thermoelectric Module Terminology

The following are some of the terms that can refer to thermoelectric or Peltier modules: Peltier device, Peltier cooler, thermoelectric cooler, thermoelectric heat pump, and semiconductor heat pump.

Benefits of using thermoelectric modules include silent operation, compact size, and low maintenance. Although the operation of thermoelectric modules is simple, their thermal efficiency is low. The amount of refrigeration obtained for the electrical energy spent is less than with a conventional compression refrigeration system.

Thermoelectric modules are used for the cooling and heating of nuclear submarines and for controlling temperatures in electronic equipment, such as computers and aerospace devices. Other applications for thermoelectric modules include water coolers, portable refrigerators, and medical applications, such as blood analyzers. See **Figure 48-19**.

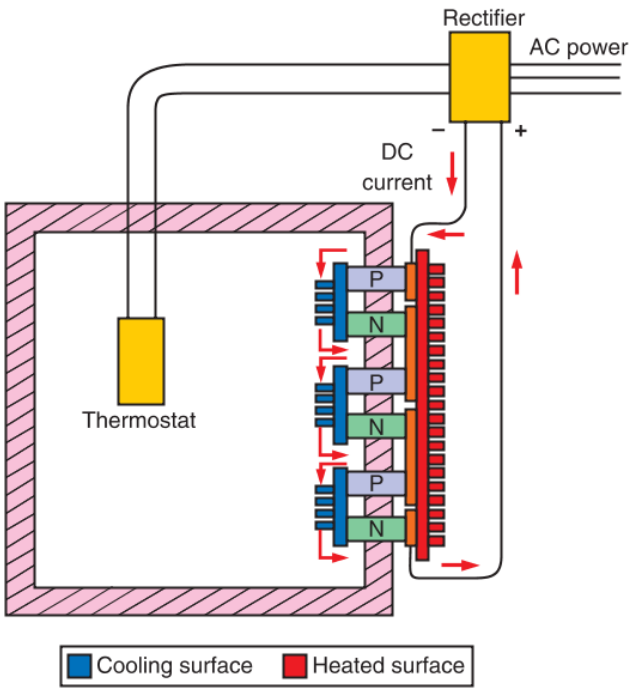

Goodheart-Willcox Publisher

Figure 48-18. A thermoelectric module with three thermoelectric couples connected in series to increase their cooling effect in the conditioned space of a small refrigerator.

The Coleman Company, Inc.

Figure 48-19. A portable cooler that uses thermoelectric modules powered by a 12 Vdc supply.

13

Copyright Goodheart-Willcox Co., Inc.

48.2.4 Vortex Tubes

A ***vortex tube*** is a simple device that can provide cold air by separating it from hot air. It has no moving parts and does not use refrigerants. When compressed air is released into a vortex tube, a large volume of hot air comes out one end of the tube, and a smaller volume of cold air comes out the other end of the tube.

A vortex tube assembly consists of a compressed-air supply line, a jet, a swirl chamber, a tube, and a deflector cone (control valve). See **Figure 48-20**. Compressed air from the supply line passes through the jet and into the swirl chamber. The jet acts as an internal venturi. It restricts the flow of compressed air, causing the air to accelerate and creating a pressure drop. The air passes into the swirl chamber at an acute angle to the chamber wall. This angle causes the airflow to hug the wall of the swirl chamber as it moves through the tube, creating a vortex. The swirling motion continues and intensifies as the air flows through the tube.

Due to centrifugal force, the air hugging the wall of the tube compresses slightly. This decreases the pressure of the air closer to the center of the tube, allowing it to expand and cool. When the air reaches the end of the tube, the hot air hugging the tube wall flows past the deflector cone. The cold air in the center of the tube hits the cone and deflects. High pressure forces the deflected cold air to reverse direction and flow back through the tube in the opposite direction. This cold air forms a column in the center of the tube as it flows backward through the swirl chamber and out the other end of the tube.

The deflector cone essentially acts as a control valve at the hot air outlet and determines how much air is allowed to escape from that end of the tube. When the cone is fully open, most of the air in the tube flows out through the hot air outlet. However, the small amount of air that does reverse direction and flows out the other end of the tube is cooled as much as possible. On the other hand, when the deflector cone is nearly closed, much more air reverses direction and flows out the other end of the tube. Since very little hot air is removed, the cooling effect is greatly reduced.

Vortex tubes are designed to operate on a continuous basis. Therefore, a large quantity of compressed air is required. No thermostatic control of any type is used to regulate the output temperature of a vortex tube. However, the output of the vortex tube can be changed manually by adjusting the deflector cone. This allows the vortex tube operator to adjust outlet air temperature as needed.

When supplied with compressed air at 100 psi (700 kPa) and 70°F (21°C), vortex tubes can be easily adjusted to deliver cold air with temperatures as low as –50°F (–46°C) or hot air with temperatures as high as 250°F (121°C). These temperatures, however, cannot be arrived at simultaneously. As the temperature at the cold air outlet is reduced so is the temperature at the hot air outlet. Similarly, when the temperature at the hot air outlet is increased so is the temperature at the cold air outlet.

Different types of vortex tubes are used for different cooling applications. In scientific work, vortex tubes can be used to dehumidify gas samples. Vortex tubes can also be used to cool environmental chambers and

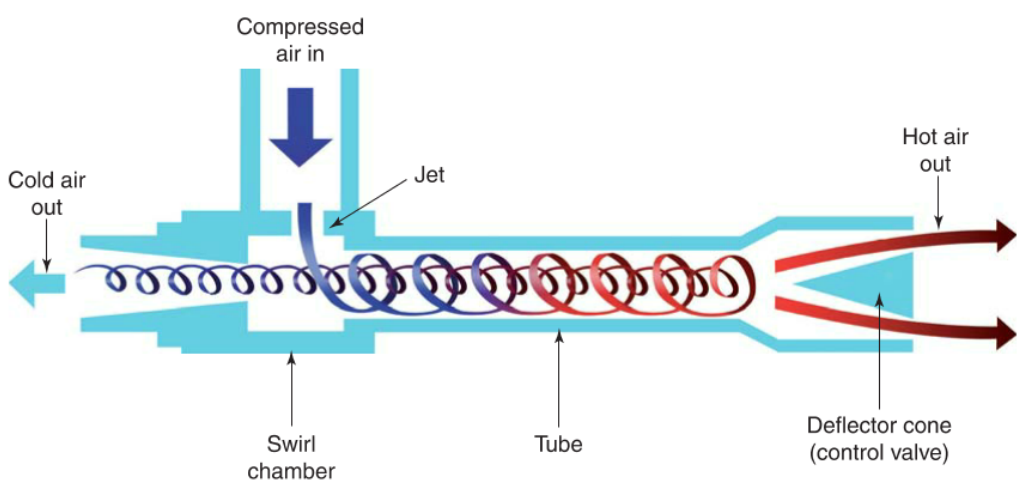

ITW Vortec

Figure 48-20. Cross section of a vortex tube.

Copyright Goodheart-Willcox Co., Inc.

electronic cabinets. Vortex tubes are commonly used in various machining and manufacturing processes to spot cool materials, **Figure 48-21**.

A common application of vortex tubes is personal air conditioning. Suits cooled by vortex tubes can be worn by people working in very hot environments or in environments that require heavy, protective clothing. The vortex tube is attached to a diffuse-air vest. Cold air is distributed over the upper body through tiny holes in the vest, cooling the person, **Figure 48-22**.

ITW Vortec

Figure 48-22. Vortex tubes can be used to provide personal air conditioning in hot environments.

48.2.5 Jet Cooling Systems

There are two types of jet cooling systems: steam jet systems and refrigerant jet systems. These systems use a jet pump instead of a compressor to provide air conditioning or refrigeration. A jet pump consists of a centrifugal pump and ejector. A steam jet system uses water as the working fluid whereas a refrigerant jet system uses a refrigerant, such as R-134a. Older units may use R-11 or R-12 as the working fluid.

Steam Jet Systems

A ***steam jet system*** provides cooling by using high-pressure steam to induce low pressure in an evaporator. The low pressure causes water in the evaporator to evaporate, cooling the remaining water.

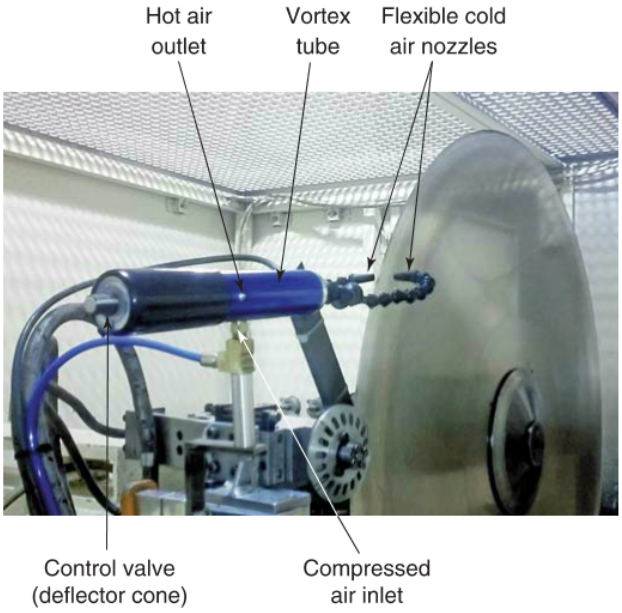

ITW Vortec

Figure 48-21. A vortex tube being used to cool a large saw blade in a paper mill.

The cooled water is then used to absorb heat as it circulates through tubing in a conditioned space. See **Figure 48-23**.

In a steam jet system, the bottom part of the evaporator is filled with water, and the rest is filled with water vapor. A steam-fed booster ejector creates suction that draws water vapor out of the evaporator, causing a pressure drop in the evaporator. Since the pressure decreases, the temperature at which the remaining water evaporates also decreases.

As the water in the evaporator begins to evaporate, it absorbs heat from the remaining water. The heat being absorbed by the evaporating water lowers the temperature of the remaining water. This process lowers the temperature of the remaining water to between 40°F and 70°F (4°C and 21°C). Temperatures below 40°F (4°C) are impractical due to the risk of water freezing in the system.

A pump circulates the cooled water from the evaporator through tubing in the conditioned space.

Copyright Goodheart-Willcox Co., Inc.

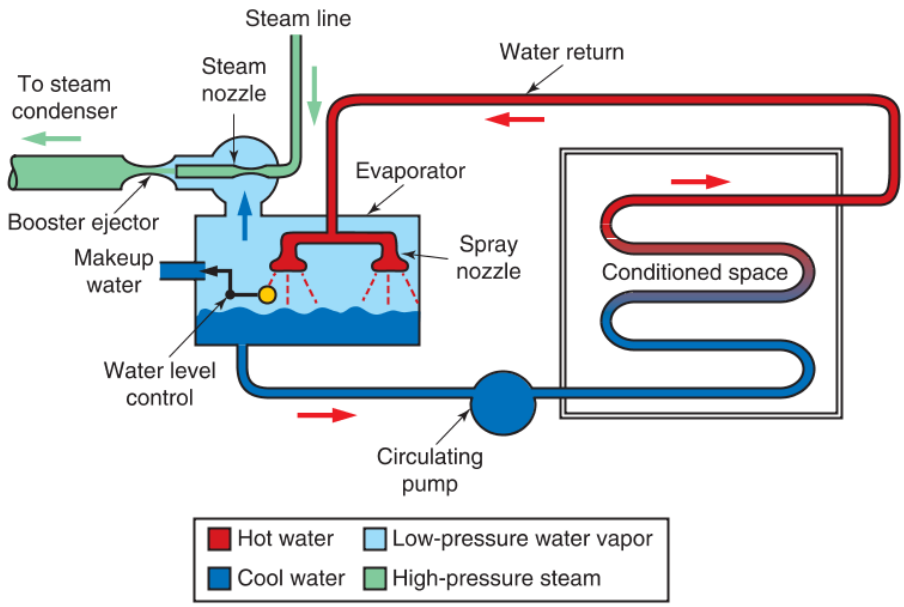

Goodheart-Willcox Publisher

Figure 48-23. A steam jet system uses steam to create low pressure in the evaporator. The low pressure causes water to evaporate and absorb heat.

As the cooled water passes through the tubing, it absorbs heat from the conditioned space. The water then returns to the evaporator where it is forced through spray nozzles.

After the steam passes through the booster ejector, it is condensed at another location for the following reasons:

- To recover some heat from the steam.
- To recover the water in the steam.
- To reduce the pressure so that it will not back up into the evaporator.

Steam pressure at the steam nozzle should be about 150 psia (1030 kPa). Although the steam condenser is not shown in the illustration, the steam pressure inside the condenser is about 3 psia (21 kPa). Knowing this, a technician can review a pressure-temperature (P/T) chart to find the corresponding condensing temperature for water at 3 psia, which happens to be 141°F (61°C).

Steam jet systems usually have a capacity of 100 tons or more. A capacity of this size requires a large supply of steam under a fairly high pressure. Exhaust steam from a high-pressure, steam-operated machine is often used to supply a steam jet system. Steam jet systems also require a large supply of water to keep the evaporator filled and to cool the steam condenser.

Steam jet systems are typically used to condition air. They are also used to cool water in certain chemical plants. Another application of steam jet systems is removing water from diluted solutions that contain juices. Orange juice can be concentrated in this way. Steam jet systems accomplish this by evaporating the water in the orange juice at a relatively low temperature. Since the juice remains cool as the water is boiled out, the vitamins in the juice are kept at full strength.

Refrigerant Jet System

A ***refrigerant jet system*** uses waste heat to help pressurize refrigerant and drive it from the evaporator to the condenser. Like a steam jet system, a refrigerant jet system uses a jet pump instead of a compressor. After refrigerant has released heat in the condenser, a circulating pump moves it through the metering device. The metering device reduces both the pressure and temperature of the refrigerant. At this point, the refrigerant splits and follows two different paths. Some refrigerant flows to the evaporator, and the rest flows through a heat exchanger where it absorbs waste heat, **Figure 48-24**.

The refrigerant passing through the evaporator cools the conditioned space by absorbing heat. The refrigerant path to the heat exchanger runs parallel to the evaporator. As the refrigerant in the heat exchanger absorbs high-temperature waste heat, it vaporizes and increases in temperature significantly. The temperature of the refrigerant leaving the heat exchanger is much higher than the temperature of the refrigerant leaving the evaporator. As a result, the speed at which the refrigerant from the heat exchanger flows through

Copyright Goodheart-Willcox Co., Inc.

the jet pump creates suction. This pulls refrigerant from the evaporator into the jet pump and then on to the condenser.

Compared to conventional compression refrigeration systems, refrigerant jet systems have a lower coefficient of performance and require a large condenser to remove heat. However, because the energy input into the system comes from waste heat, this type of system can be very economical in some applications. Refrigerant jet systems are often found in commercial installations where a large amount of waste heat produced by other commercial processes is readily available. Both steam jet and refrigerant jet systems demonstrate how energy conservation can be incorporated into high-waste commercial processes.

48.2.6 Stirling Refrigeration Cycle

The ***Stirling cycle*** is a closed thermodynamic cycle that can convert thermal energy into mechanical energy and vice versa. It was originally developed in 1816 by Robert Stirling who hoped to create an engine that would be a safer alternative to the steam engine. When heat is applied to a Stirling engine, the heat energy is converted into motion. Conversely, if mechanical energy is applied to a Stirling engine, heat is transferred from one area of the engine to another. This causes one area of the engine to heat up and the other to cool off.

The Stirling cycle was adapted for refrigeration by John Herschel in 1834. It is now used in some refrigeration installations designed to reach very low temperatures. This cycle, when used in a three-stage system, can produce temperatures as low as –450°F (–268°C). In theory, an ideal Stirling refrigeration cycle picks up heat only at the lowest temperature and discards heat only at the highest temperature. There would be no heat gain or heat loss between these two temperatures. In actuality, a practical Stirling refrigeration cycle is almost as good. It conserves the heat energy produced during one part of the cycle and uses it in another part of the cycle.

A simple Stirling refrigeration system consists of one cylinder and two pistons with a stationary regenerator between them. The entire space between the pistons is charged with a gas, usually helium. The cylinder walls are insulated to prevent heat transfer. The heat exchangers are uninsulated and are the only places where heat can be added or removed from the system. The cylinder has two heat exchangers: one for rejecting heat and the other for absorbing heat. The regenerator is filled with a porous material that allows the gas in the cylinder to pass freely through it. The material must also

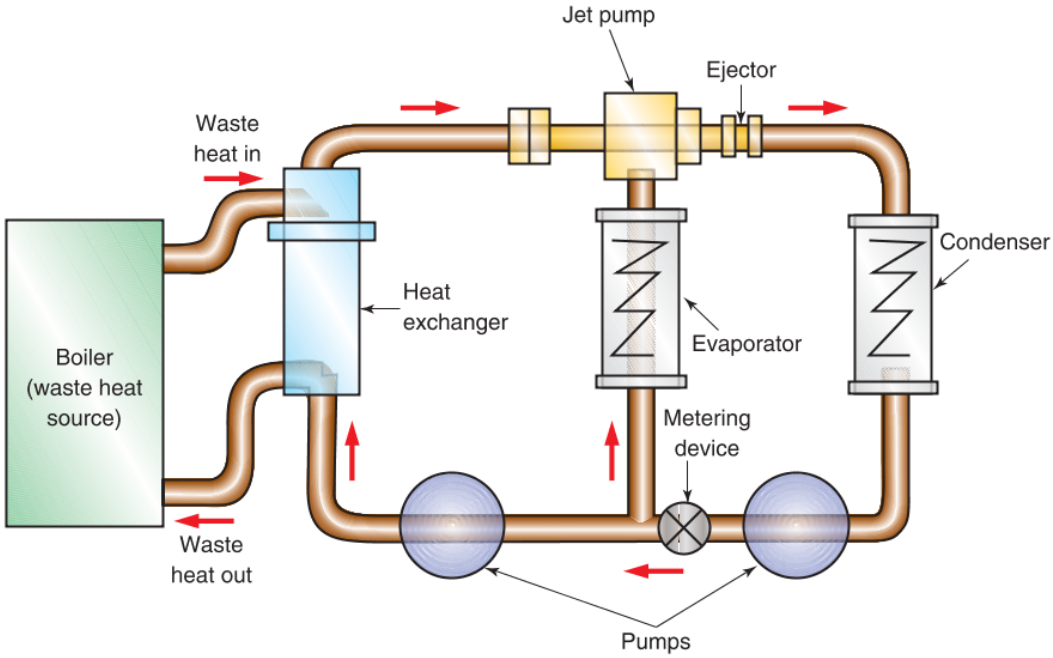

Goodheart-Willcox Publisher

Figure 48-24. The flow of refrigerant vapor from the heat exchanger through the jet pump creates a siphoning effect that draws refrigerant vapor from the evaporator into the jet pump.

Copyright Goodheart-Willcox Co., Inc.

have good thermal storage capacity and be able to transfer heat effectively, **Figure 48-25**.

The four steps of the Stirling refrigeration cycle are shown in **Figure 48-26**. In Step A, the refrigeration system is at its starting point. Both the hot piston and the cold piston are as far to the left as they can go. The hot piston begins moving to the right while the cold piston remains stationary. This compresses the gas. Some of the heat generated by the compression is rejected through the heat exchanger in the compression area.

In Step B, the cold piston begins moving to the right at the same speed as the hot piston. During this time, the volume of gas in the cylinder does not change. The gas from the compression area of the cylinder is forced through the regenerator, which absorbs heat from the gas.

In Step C, the hot piston is at the end of its stroke and remains stationary. The cold piston continues moving to the right, increasing the volume of gas in the expansion area. As the gas expands, it begins to cool off. Heat is absorbed through the heat exchanger in the expansion area to maintain a constant gas temperature.

In Step D, both the hot piston and the cold piston begin moving to the left at the same speed. The volume of gas does not change. As the gas is forced back through the regenerator, it reabsorbs the heat that it had given up to the regenerator in Step B. At the end of Step D, the system is in the same state it was at the beginning of Step A. The cycle is ready to begin again.

In practice, the left end of the cylinder is water cooled. The right end of the cylinder is the cooling unit. There are many different designs used to apply the Stirling refrigeration cycle. Although the systems may vary widely in their mechanics, they all operate on the same basic principles described here.

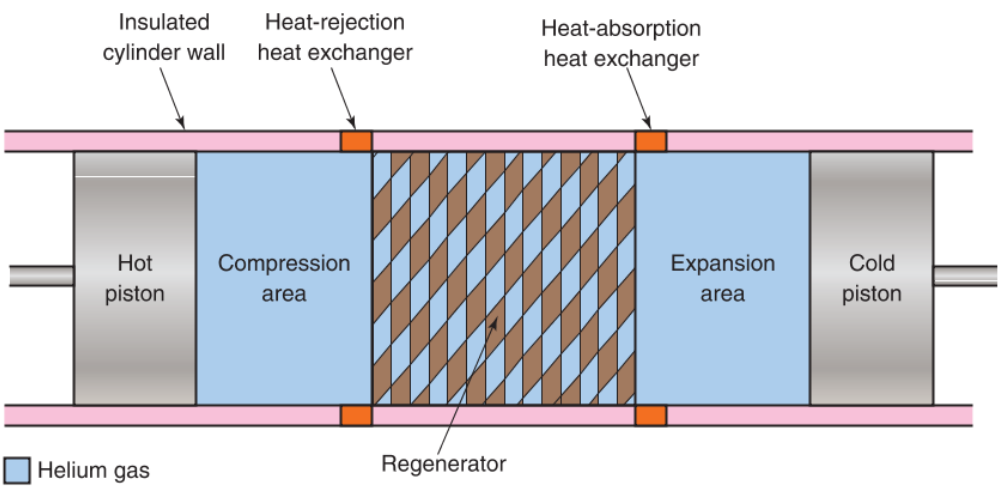

Goodheart-Willcox Publisher

Figure 48-25. The basic parts of a simplified Stirling refrigeration system.

Copyright Goodheart-Willcox Co., Inc.

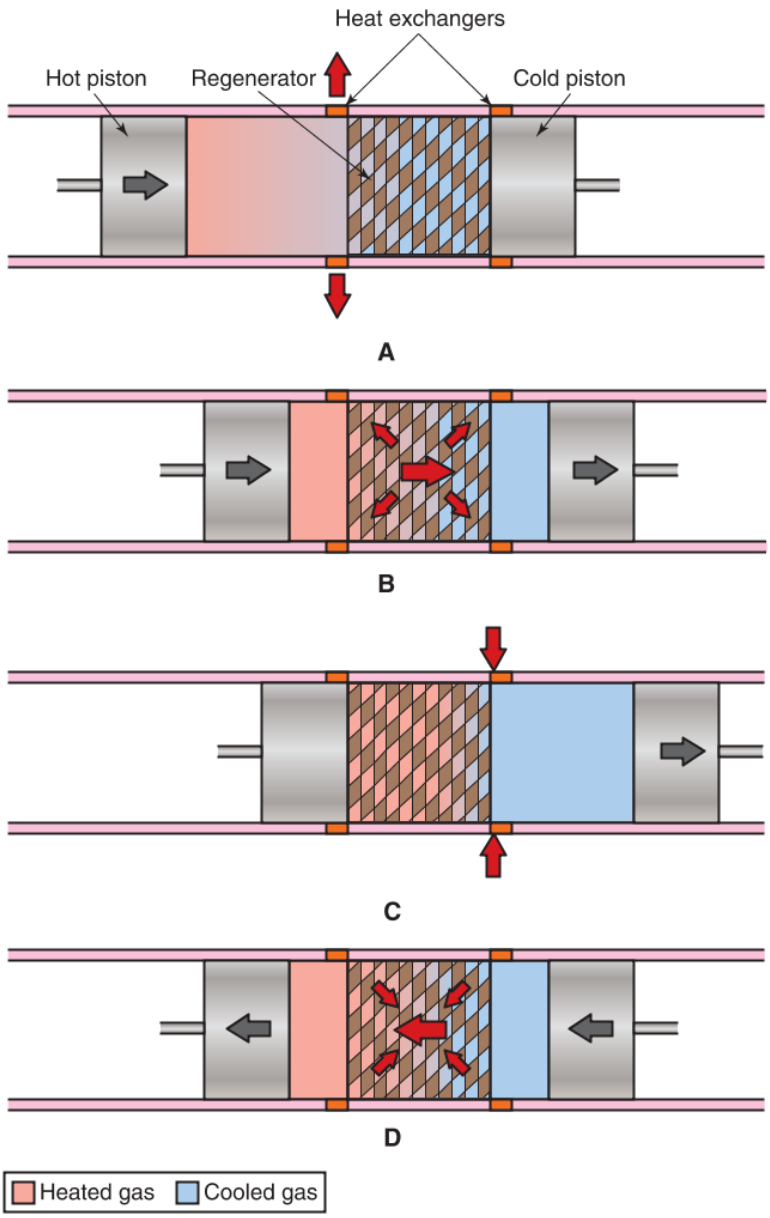

Goodheart-Willcox Publisher

Figure 48-26. Basic operation of a Stirling refrigeration system.

Copyright Goodheart-Willcox Co., Inc.

Chapter Review

Summary

- Truck and trailer refrigeration systems have many of the same components as other mechanical refrigeration systems: compressor, condenser, refrigerant metering device, and direct-expansion evaporator. Components specific to truck and trailer refrigeration include a quench valve, a subcooler, solenoid valves, and vibration absorbers.
- A diesel-powered generator and plug-in standby power are the two common methods used to drive the compressor in a refrigerated trailer. In refrigerated trucks, the compressor may be driven by the vehicle engine or an external generator.
- A eutectic plate is a thin, rectangular tank containing an evaporator surrounded by a solution that freezes at a desired temperature. For smaller trucks with eutectic plates, a portable condensing unit is plugged into the plates at night to freeze the solution inside them. During the day, the condensing unit is removed, and the eutectic plates provide passive cooling inside the truck box.
- The compressors in railcar refrigeration systems are typically driven off the railcar's axle while the train is in motion. Intermodal shipping containers can be cooled by eutectic plates or dry ice for short trips. For longer trips, a generator powers the refrigeration system.
- Due to the climates in which many boats travel, the cold boxes used in marine refrigeration systems require water-resistant insulation with a high R-value. Larger systems may use an open-drive compressor, while smaller systems typically use hermetic compressors. The three main methods for cooling the condenser are air, pumped-in seawater, and keel coolers.
- An expendable refrigeration system vents its refrigerant after it has evaporated. One type of expendable refrigeration sprays liquid nitrogen into a conditioned space. As the liquid nitrogen evaporates, it cools the space and is then vented.
- Dry ice refrigeration relies on the sublimation of solid carbon dioxide to absorb heat from a conditioned space. The dry ice may be used alone, or it may be used as a secondary refrigerant to condense another refrigerant in an adjacent but physically isolated circuit.
- A thermoelectric couple is made of N-type and P-type semiconductor materials. When direct current flows through a thermoelectric couple, one side of the thermoelectric couple transfers heat to the other side. The hot and cold sides can be switched by reversing the direction of the current.
- A vortex tube can provide cold air without any refrigerant or moving parts. Compressed air is fed into the vortex tube, which direct airflow in a certain manner. Hot air leaves one outlet in the tube, and cold air leaves the other outlet.
- Refrigerant jet systems use waste heat to help drive refrigerant from the evaporator to the condenser. Steam jet systems use high-pressure steam to siphon off water vapor inside an evaporator. The resulting drop in pressure increases evaporation, which cools the remaining water in the evaporator.
- The Stirling refrigeration cycle converts mechanical energy into heat energy. A simple Stirling refrigeration system uses a cylinder with two pistons, a stationary regenerator, and heat exchangers. As the pistons move, they transfer heat by compressing and expanding a gas, usually helium.

Review Questions

Answer the following questions using the information in this chapter.

1. In truck and trailer refrigeration systems, hot-gas solenoid valves open to initiate the _____ cycle.
   A. defrost
   B. passive cooling
   C. quenching
   D. transportation
2. A quench valve is a TXV that opens based on _____ temperature.
   A. discharge line
   B. liquid line
   C. subcooler
   D. suction line

Copyright Goodheart-Willcox Co., Inc.

3. Which of the following statements regarding compressors in transportation refrigeration systems is *not* true?
   A. The compressor in railcar refrigeration is usually driven by the railcar axle.
   B. For longer trips, intermodal shipping containers use dry ice as the sole means of refrigeration.
   C. In small-capacity trucks, the compressor may be driven by the vehicle's engine.
   D. Some refrigerated trucks use a portable condensing unit that is removed before the truck is put into service for the day.
4. Which of the following types of insulation would be best suited for use in a marine cold box where space is severely limited?
   A. Extruded polystyrene
   B. Loose cellulose insulation
   C. Polyurethane foam
   D. Vacuum insulation panels
5. Which of the following statements regarding keel coolers is *not* true?
   A. Air-cooled condensers are less efficient than keel coolers.
   B. Keel coolers run the condenser tubing outside the hull.
   C. Pumps must be used to draw in and discharge the cooling water.
   D. Zinc anodes are used on keel coolers to minimize corrosion of their housings.
6. Which of the following refrigerants is commonly used in expendable refrigeration systems?
   A. Liquid ammonia
   B. Liquid argon
   C. Liquid carbon dioxide
   D. Liquid nitrogen
7. The process of dry ice changing from a solid directly into a vapor is called _____.
   A. condensation
   B. desiccation
   C. evaporation
   D. sublimation
8. Which of the following phenomena is the basis of thermoelectric refrigeration systems?
   A. The Electric effect
   B. The Peltier effect
   C. The Seebeck effect
   D. The Watt effect
9. Several thermoelectric couples connected in series form a _____.
   A. rectifier
   B. thermocouple
   C. thermoelectric module
   D. vortex tube
10. Eutectic plates designed for smaller delivery truck refrigeration on shorter trips provide _____ cooling.
    A. active
    B. expendable
    C. keel
    D. passive
11. In a vortex tube, the air at the center of the tube is cooled due to _____.
    A. change of polarity
    B. compression
    C. eutecticity
    D. expansion
12. In a vortex tube, the jet acts as an internal venturi, which restricts the flow of compressed air. This causes the air to accelerate and creates a(n) _____.
    A. electric spark
    B. N-type material
    C. pressure drop
    D. pressure increase
13. In a steam jet system, the steam jet _____.
    A. carries heat away from the condenser
    B. forces refrigerant into the condenser
    C. lowers the pressure in the evaporator
    D. spins a compressor turbine
14. Which of the following components is *not* part of a refrigerant jet system?
    A. Compressor
    B. Condenser
    C. Evaporator
    D. Heat exchanger
15. A Stirling refrigeration system uses mechanical energy to transfer _____ energy.
    A. electrical
    B. magnetic
    C. sublimation
    D. thermal

Copyright Goodheart-Willcox Co., Inc.

CHAPTER 49 Commercial Refrigeration System Configurations

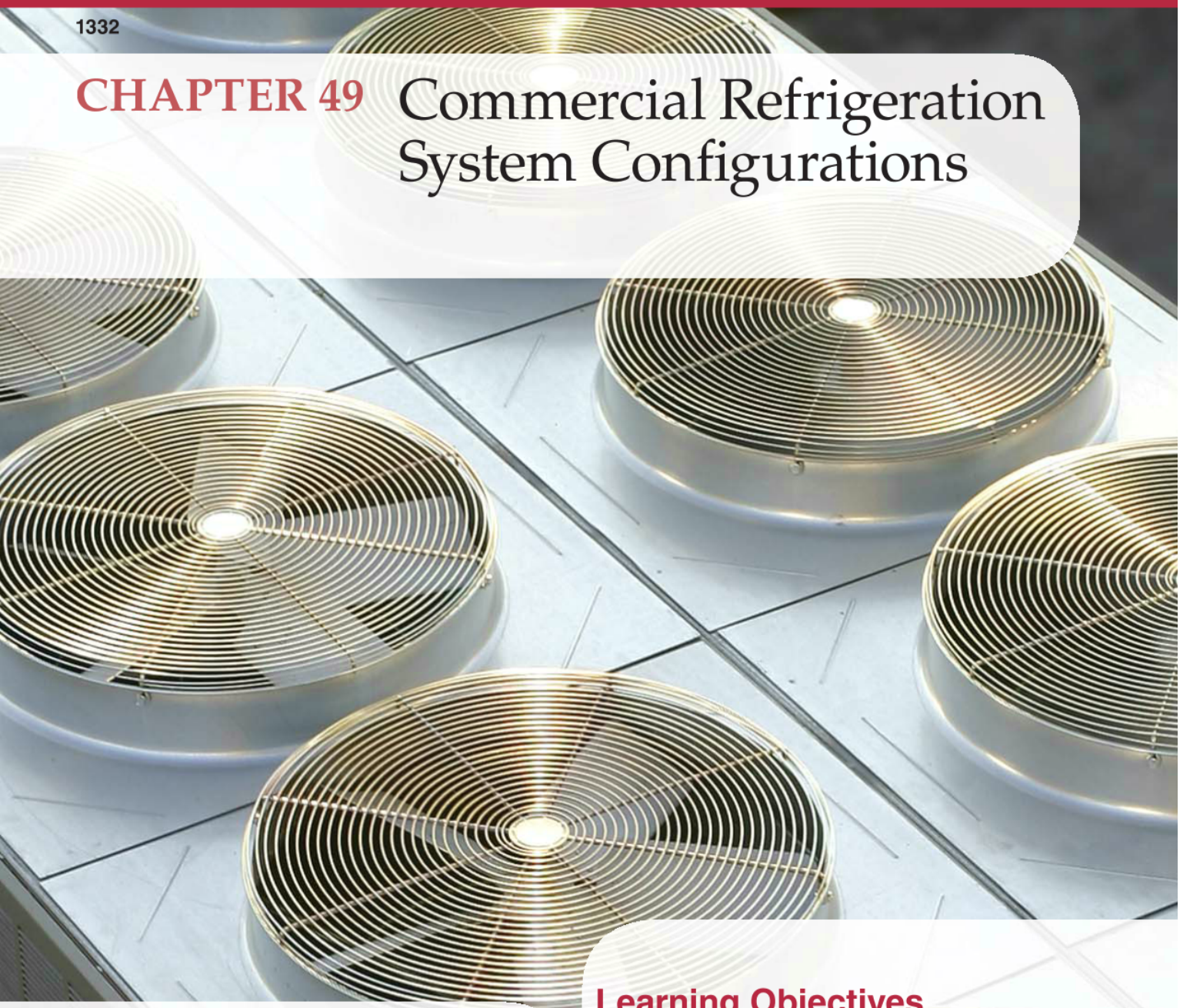

Chapter Outline

49.1 Commercial Systems Configuration Overview
49.2 Multiple-Evaporator Systems
49.3 Modulating Refrigeration Systems
- 49.3.1 Multiple-Compressor Systems
- 49.3.2 Variable-Capacity, Single-Compressor Systems
- 49.3.3 Hot-Gas Bypass Capacity Control

49.4 Multistage Systems
- 49.4.1 Compound Refrigeration Systems
- 49.4.2 Cascade Refrigeration Systems

49.5 Secondary Loop Refrigeration Systems

Learning Objectives

Information in this chapter will enable you to:

- Explain the difference between packaged and split commercial refrigeration systems.
- Understand the operation and purpose of various components used in sophisticated commercial refrigeration systems.
- Identify applications for multiple-evaporator systems.
- Summarize the different methods of achieving variable capacity in modulating refrigeration systems.
- Explain the refrigeration cycle in compound and cascade systems.
- Describe the purpose and operation of secondary loop refrigeration systems.

Technical Terms

cascade refrigeration system
compound refrigeration system
high-stage compressor
intercooler
low-stage compressor
modulating refrigeration system
multiple-compressor system
multiple-evaporator system
multistage system
packaged systems
secondary loop refrigeration system
split system

Review of Key Concepts

Reviewing these concepts from earlier chapters will help you understand new concepts presented in this chapter:

- A crankcase pressure regulator (CPR) is a valve with an adjustable pressure setting that prevents crankcase pressure from exceeding a preset safe value. It throttles suction pressure above its setting to maintain a safe pressure level in the compressor crankcase. (Chapter 19)
- Since high head pressure can cause problems for a compressor, a normally closed pressure switch is installed in the compressor discharge line between the compressor and condenser. If head pressure rises too high, the discharge line pressure switch opens to shut off the system. (Chapter 19)
- A mechanical air-conditioning or refrigeration system can modulate its cooling capacity through different means. A method called variable refrigerant flow (VRF) involves changing the amount of refrigerant pumped through the system. In single-compressor systems, this is usually done with an inverter-driven compressor and electronic expansion valve (EEV). (Chapter 32)
- An evaporator pressure regulator (EPR) is a pressure-regulating valve that restricts the flow of refrigerant coming out of the evaporator. It maintains a set minimum pressure in the evaporator, which corresponds to a desired temperature setting. (Chapter 22)
- Head pressure control valves operate to maintain a minimum head pressure during periods of low ambient temperature, when head pressure can drop too low. (Chapter 22)
- Large commercial refrigeration systems often use parallel compressor racks or distributed systems, which have more than one compressor, to serve display cases and other cooling units. (Chapter 47)
- Refrigeration systems with multiple evaporators require additional controls and components, such as manifold valves, evaporator pressure regulators (EPRs), check valves, different piping arrangements, and multiple refrigerant metering devices. (Chapter 22)
- Different types of HVACR systems can be designed for multistage operation. Thermostats control the operation of components to manage heating or cooling capacity. (Chapter 36)
- R-717 (ammonia, NH_3) has a low boiling point, making it ideal for low-temperature refrigeration. R-717 refrigeration systems are constructed of iron or steel, as ammonia attacks copper in the presence of moisture. (Chapter 9)
- A chiller system uses water as its secondary refrigerant and another fluid for its primary refrigerant. A secondary refrigerant absorbs heat from the conditioned space and transfers it to a primary refrigerant to reject outside the conditioned space. (Chapter 33)

Introduction

Because of the broad range of applications for commercial refrigeration, a wide variety of system configurations have been developed. Commercial refrigeration systems may be custom designed and constructed to meet the specific needs of the customer. These systems may use any of a number of methods to achieve the desired cooling capacities under the expected operating conditions.

Video

- High-Side Components

49.1 Commercial Systems Configuration Overview

There are two basic types of commercial systems: packaged and split. ***Packaged systems*** are whole refrigeration units designed, built, and shipped by the manufacturer. They include all of the major refrigeration components, piping, and electrical wiring of a complete system. Such units arrive charged, tested, and ready for operation. Before using a packaged system, check manufacturer instructions to see if any further tasks are necessary, such as connection to a drain for condensate.

Split systems are "site engineered." Components, such as the condensing unit, conditioned cabinets, tubing, and various control components, are purchased separately and assembled at the jobsite. Split systems are often custom designed for specific applications.

Earlier chapters of this text showed many compression refrigeration systems that were quite simple. For real-world applications however, operating conditions and refrigeration requirements may require that additional components be installed in a system. Various pressure regulators, flow controls, and sensors make refrigeration systems efficient and safe. A small commercial refrigeration system equipped with a variety of typical commercial refrigeration components is shown in **Figure 49-1**.

These components have been explained separately in various earlier chapters. Refer back to these chapters as referenced in the Review of Key Concepts section at the beginning of this chapter. An understanding of their purpose and operation is necessary when servicing and maintaining complex commercial refrigeration systems.

49.2 Multiple-Evaporator Systems

A ***multiple-evaporator system*** is a refrigeration system with two or more evaporators connected to only one condensing unit. These systems are commonly used in commercial refrigeration applications, **Figure 49-2**.

Liquid refrigerant flows through the thermostatic expansion valves (TXVs) to the evaporators. Each evaporator will have its own TXV. The evaporators may have identical or different evaporator temperatures. If the evaporator temperatures are identical, the system may use only low-side floats or TXVs to control the refrigerant. If the evaporators are intended to maintain different temperatures, the higher-temperature branch of the system must be equipped with an evaporator pressure regulator (EPR). **Figure 49-2**.

In a fixed volume, temperature and pressure both rise and fall together. If one evaporator operates at a higher temperature than another equally sized evaporator, the higher temperature evaporator must operate at a higher pressure also.

Since evaporators in a multiple-evaporator system share a suction line, they would normally have the same pressure. In order for one of these evaporators to have a higher pressure, a restriction must be placed between the low-pressure suction line and the evaporator. When suction line pressure drops below the pressure setting of an evaporator pressure regulator (EPR), the EPR closes or throttles its opening. Since less refrigerant can pass out through the EPR, evaporator pressure rises. Keeping an evaporator at a higher pressure will cause evaporator temperature to rise correspondingly. In this manner, EPRs allow evaporators sharing the same suction line to operate at different temperatures.

Just as the higher temperature evaporator must maintain a higher pressure than the lower temperature evaporator, the lower temperature evaporator must maintain a lower pressure than the higher temperature evaporator. During the Off cycle, refrigerant from the warmer evaporator can backflow into the colder evaporator. This could raise the temperature, which could short-cycle the system or begin thawing frozen products. To prevent the warmer evaporator's refrigerant from flowing into the cold evaporator, a check valve is installed. This will allow refrigerant to flow out of the cold evaporator but not back into it.

49.3 Modulating Refrigeration Systems

Most refrigeration systems are designed to have enough cooling capacity to maintain the desired temperature under the heaviest load. To maintain this temperature, the compressor operates when cooling (heat removal) is required and shuts off as soon as the desired temperature is reached. In other words, most refrigeration systems are either on or off. This means full power cooling operation or no cooling.

However, if the heat load is light, a simple on-off system may be oversized for the job. The operating cost for this oversized system is higher than for a system whose capacity more closely matches the needed load. The overcapacity system tends to cool the conditioned area too fast, resulting in short cycling. The term short cycling refers to a refrigeration system turning on and off too quickly. Short cycling causes extra wear and tear on the equipment, consumes excessive energy,

Copyright Goodheart-Willcox Co., Inc.

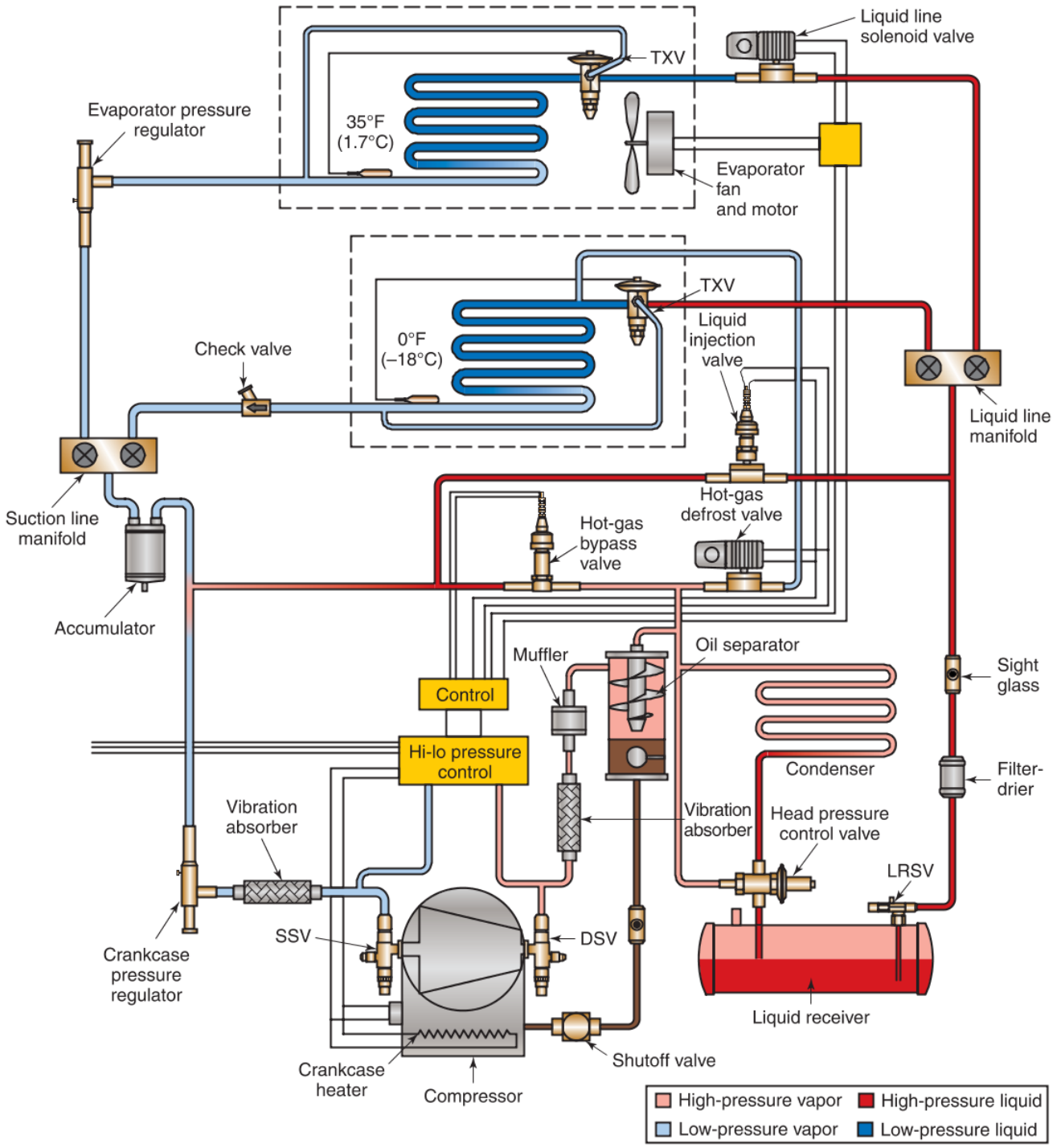

Goodheart-Willcox Publisher

Figure 49-1. The combination of components in this commercial refrigeration system makes the unit work more efficiently. The inclusion of certain components, like various service valves, makes this system easier to service.

13

and prevents the system from providing proper dehumidification.

A ***modulating refrigeration system*** is a system that is able to adjust its capacity to more closely match a variable heat load. Several methods of modulating refrigeration are available. The most common methods of modulating refrigeration system capacity will be addressed in the following sections.

Copyright Goodheart-Willcox Co., Inc.

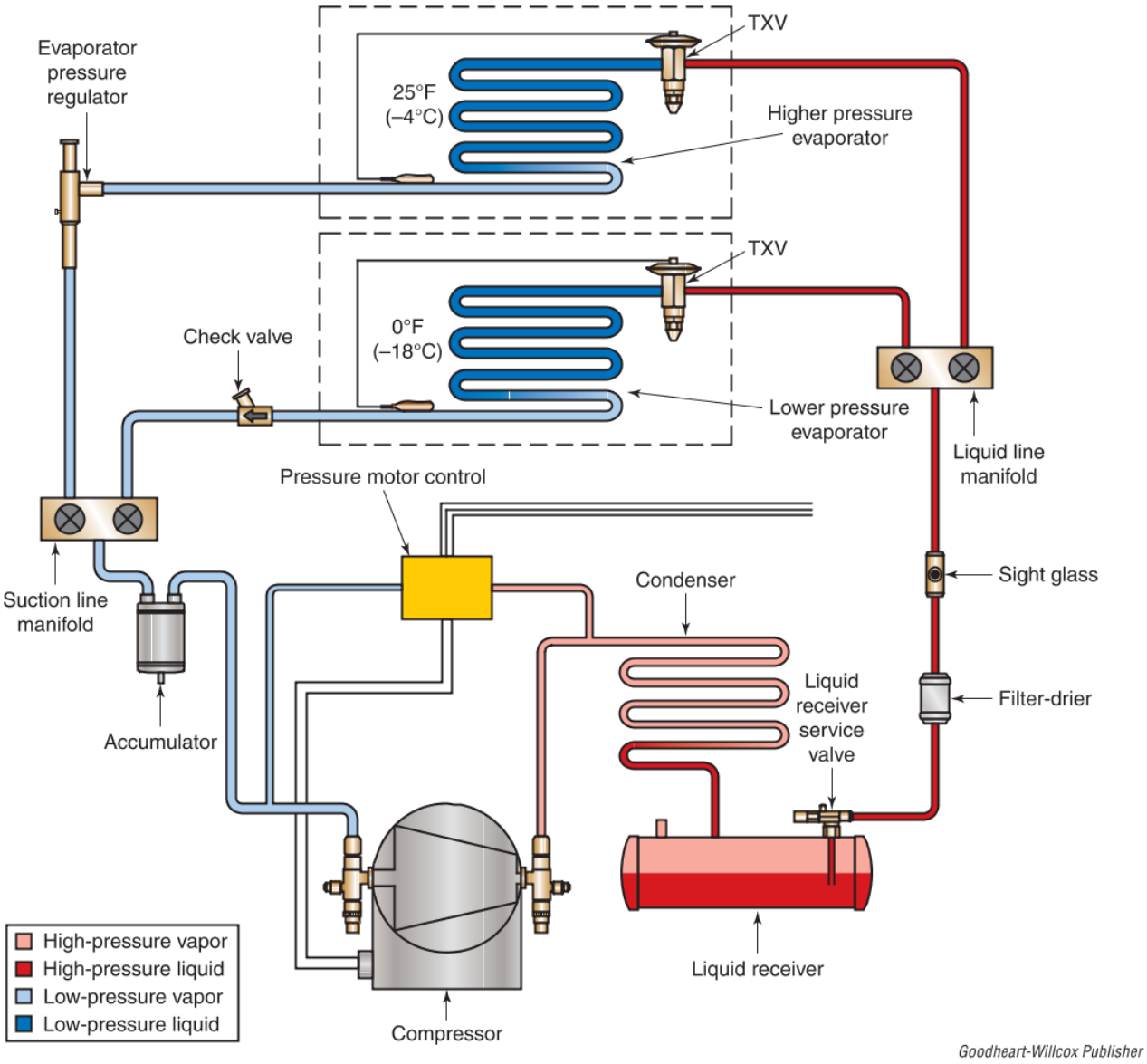

Figure 49-2. This multiple-evaporator system maintains a temperature of 0°F (–18°C) in one evaporator and 25°F (–4°C) in the other evaporator. The 0°F (–18°C) evaporator operates at a lower pressure than the 25°F (–4°C) evaporator.

49.3.1 Multiple-Compressor Systems

A ***multiple-compressor system*** is a modulating refrigeration system in which two or more compressors operate in parallel. The compressors are said to operate in parallel because each compressor provides a separate path for carrying refrigerant from the evaporator to the condenser. This is similar to the way two or more resistors wired in parallel allow current to follow separate paths from one end of a voltage source to the other, **Figure 49-3**.

Each of these parallel compressors is operated by a separate contactor or motor starter. By turning the individual compressors on and off, more or less refrigerant can be pumped, and different operating pressures can be achieved in the evaporators. As a result, the system can operate at different cooling capacities as needed.

In a multiple-compressor system, if the heat load remains constant and the temperature holds steady, a single compressor may provide adequate capacity. However, if the temperature rises to the second motor control's set point, a second compressor will start to operate along with the first. Additional compressors continue to cut in until enough cooling capacity is obtained.

Figure 49-4 shows a typical refrigeration cycle for a multiple-compressor modulating refrigeration system. Notice how this installation has three compressors

Copyright Goodheart-Willcox Co., Inc.

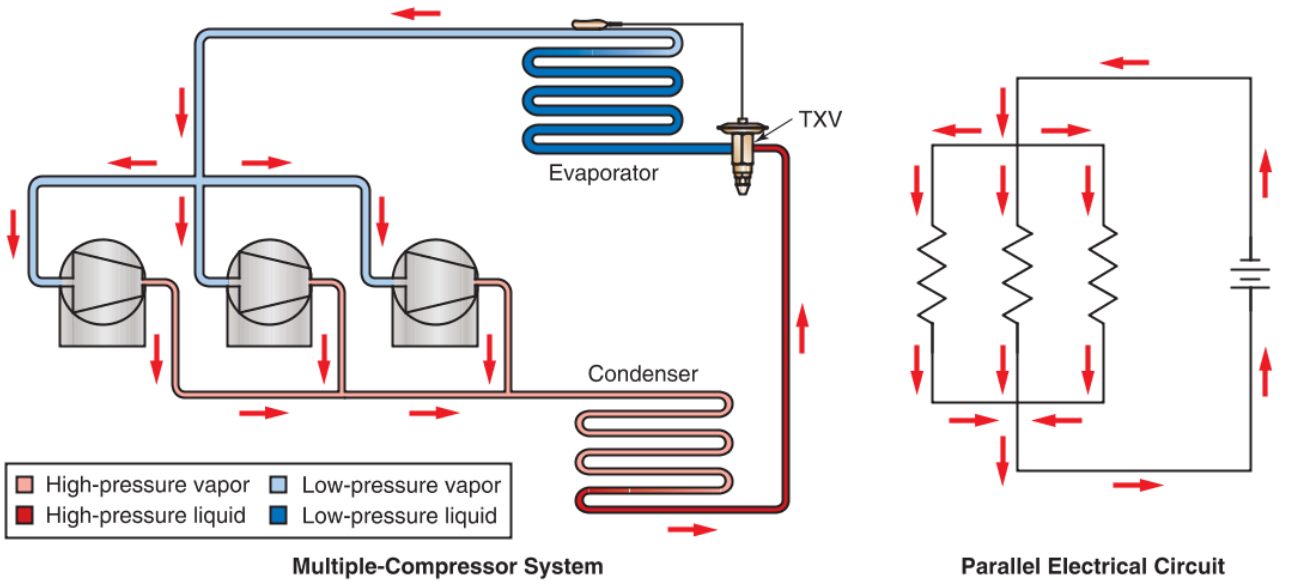

Figure 49-3. A multiple-compressor system allows refrigerant to carry heat from the evaporator to the condenser along separate parallel paths. Each path leaves the evaporator and arrives at the condenser. Likewise, a parallel electrical circuit allows current to flow from one end of a voltage source to the other through separate parallel paths.

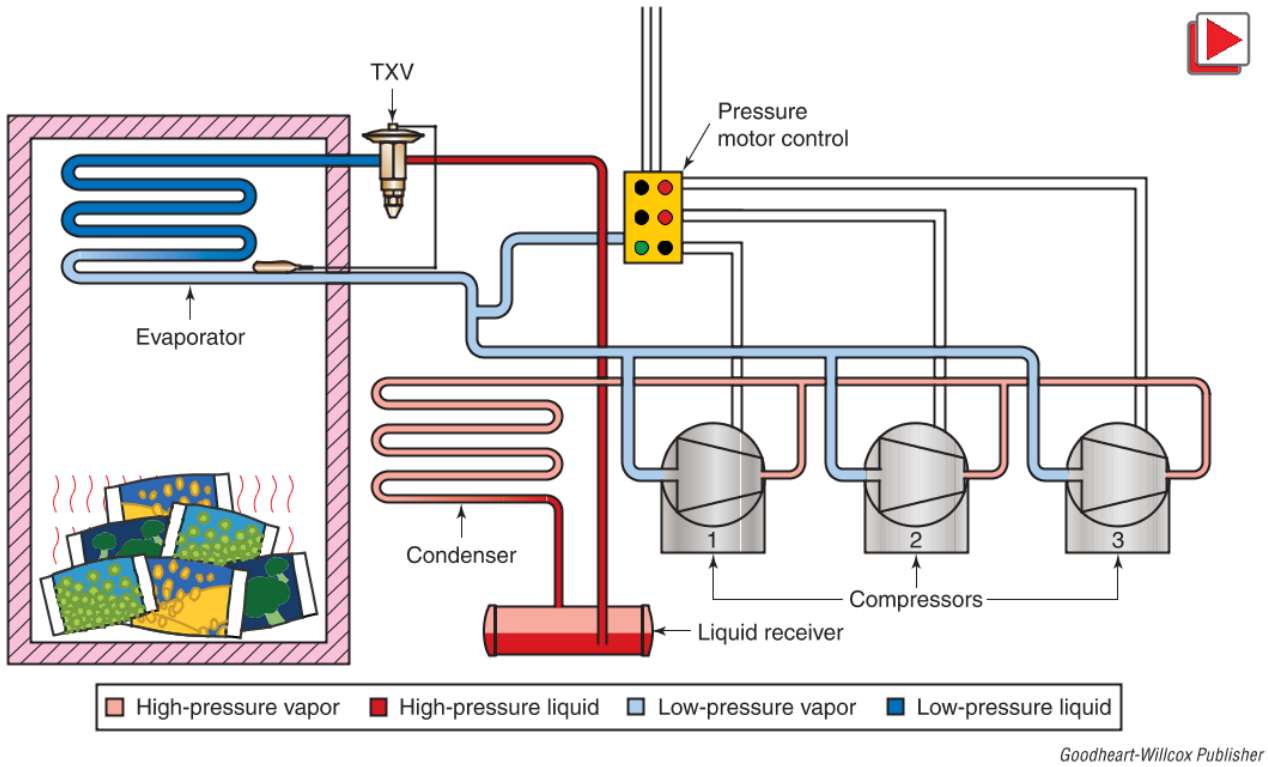

Figure 49-4. Modulating refrigeration system that uses a single pressure motor control to operate up to three compressors to maintain the appropriate temperature.

Copyright Goodheart-Willcox Co., Inc.

but only one evaporator and one condenser. The compressors are cycled on and off based on signals from a pressure motor control connected to the suction line. The control contains a special switching device that alternates the operation of the compressors, so that each compressor runs for about the same amount of time. The modulating cycle maintains uniform temperatures and operates economically.

Many conventional refrigerant controls can be used. However, thermostatic expansion valves (TXVs) are the most common type. The same evaporator is connected to all the compressors. The same condenser and liquid receiver may be used by all the compressors, or each compressor may have its own condenser and receiver.

49.3.2 Variable-Capacity, Single-Compressor Systems

A second method of modulating system capacity is to vary the output from a single compressor. This can be accomplished in a number of ways, depending on the type of compressor installed in the system. Common methods of varying capacity in single compressor systems are as follows:

- Change the speed of the compressor (variable speed motor)
- Unload one of the cylinders (of a reciprocating compressor)
- Change the effective displacement of the compressor
- Bypass some of the refrigerant to the low side of the system.

Detailed information about variable-capacity compressors can be found in Chapter 18, *Compressors* and Chapter 32, *Residential Central Air-Conditioning Systems*.

49.3.3 Hot-Gas Bypass Capacity Control

The variable speed, variable displacement, and compressor unloading methods of adjusting capacity all work by changing the amount of refrigerant that passes through the compressor. The hot-gas bypass method of varying system capacity does not vary the output of the compressor. Instead, the system capacity is reduced during low-load periods by allowing some of the discharge line refrigerant vapor to bypass the condenser and metering device or evaporator. See **Figure 49-5**.

In some systems, like the one shown in **Figure 49-5A**, when the heat load in the conditioned space decreases and the temperature starts to decrease, hot gas can be diverted directly into the evaporator, bypassing the metering device. The hot gas entering the evaporator creates an additional heat load. This allows the system to continue running while maintaining the desired temperature. The result is more precise temperature and humidity control than would be attained by normally cycling the system on and off.

In other systems, like the one shown in **Figure 49-5B**, hot gas is bypassed into the suction line. This prevents the refrigerant in the suction line from condensing as the flow of refrigerant through the evaporator slows down. In many cases where the hot gas is bypassed to the suction line, a desuperheating circuit is combined with the hot-gas bypass circuit. In these designs, a liquid injection (desuperheater) valve injects a small amount of liquid refrigerant into the bypass line as needed. The liquid evaporates in the bypass line, cooling the hot bypass gas, which in turn prevents the compressor from overheating. More information on hot-gas bypass and desuperheating is provided in Chapter 22, *Refrigerant Flow Components*.

Pro Tip

Hot-Gas Bypass

In most cases, hot-gas bypass to the evaporator inlet is preferred over bypassing to the suction line. If hot gas is bypassed to the suction line instead of the evaporator, flow rates through the evaporator and suction line can slow to the point where the refrigerant flow is unable to help distribute oil. In such cases, the system relies on gravity alone to return oil to the compressor. Any hot-gas bypass system must be carefully designed to provide adequate oil flow under all operating conditions.

Because the bypass gas produces no cooling effect, both methods of hot-gas bypass reduce the overall efficiency of the system. For this reason, a system modulated by hot-gas bypass may be more expensive to operate than systems that use other methods to modulate refrigeration effect.

49.4 Multistage Systems

Some refrigeration systems must produce temperatures that are so low they can only be obtained using multiple stages of compression or refrigeration. A single compressor would simply be unable to achieve the compression ratios required. In such cases, a multistage system is used.

A ***multistage system*** is any refrigeration system with more than one stage of compression. There are two general types: cascade and compound. Either type of multistage system can be used to achieve much lower temperatures than can be reached with a single-stage system.

49.4.1 Compound Refrigeration Systems

A ***compound refrigeration system*** is a multistage system that has two or more compressors connected

Copyright Goodheart-Willcox Co., Inc.

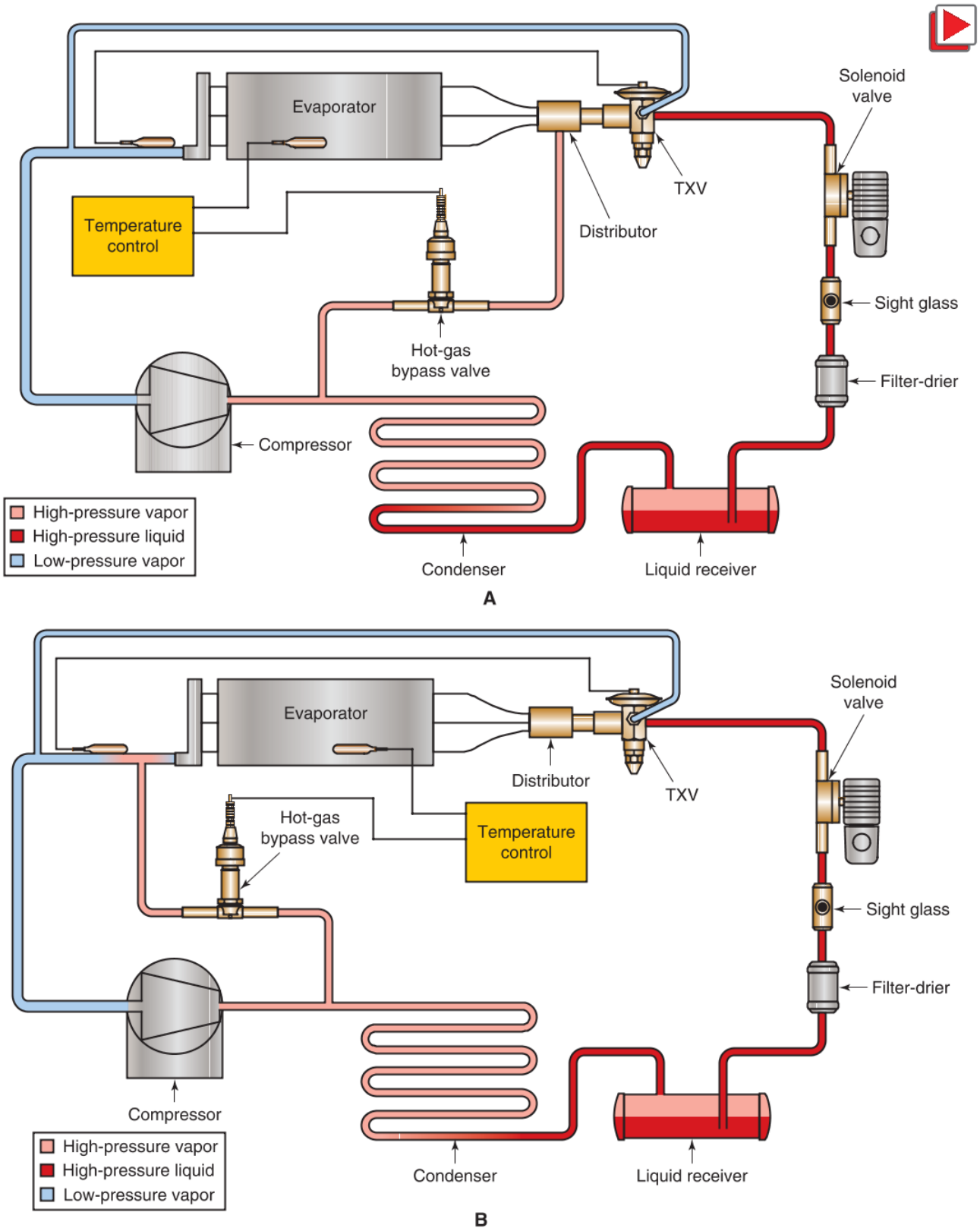

Goodheart-Willcox Publisher

Figure 49-5. The two types of hot-gas bypass for system capacity control. A—Hot gas from the compressor is bypassed directly to the evaporator inlet. B—Hot gas from the compressor is bypassed into the suction line.

Copyright Goodheart-Willcox Co., Inc.

in series. In a compound system, each successive compressor builds on the work performed by the previous compressor. **Figure 49-6** shows the refrigeration cycle of a compound system.

The compressor connected to the suction line that pumps the lower temperature and lower pressure refrigerant is the ***low-stage compressor***. The compressor that discharges into the condenser and pumps higher temperature and higher pressure refrigerant is the ***high-stage compressor***.

As shown in **Figure 49-6**, the low-stage compressor discharges into the intake of the high-stage compressor. The low-stage compressor discharge line carries the vapor through an intercooler and then into the high-stage compressor. An ***intercooler*** is a heat exchanger in a compound refrigeration system that removes the superheat from the low-stage discharge vapor. The refrigerant vapor is cooled (but not condensed) between the compressors.

Pro Tip

Desuperheating in Compound Refrigeration Systems

The intercooler between low-stage and high-stage compressors in a compound refrigeration system is a desuperheating heat exchanger. Superheat (all sensible heat) in the refrigerant is absorbed and carried away by a coolant flowing through the intercooler. However, some systems remove superheat from the low-stage using direct liquid injection rather than an intercooler. Liquid injection desuperheating of discharge line hot-gas vapor bypassed into the suction line is covered in Chapter 22, *Refrigerant Flow Components*. The same principles apply to liquid injection desuperheating of vapor between compressor stages in a compound refrigeration system.

The high-stage compressor discharges the refrigerant into the condenser, where it condenses into a high-pressure liquid and flows into the liquid receiver. From the liquid receiver, the liquid refrigerant flows through the liquid line to the TXV. The TXV regulates how much liquid refrigerant enters the evaporator. In the evaporator, the low-pressure liquid refrigerant absorbs heat and boils into low-pressure vapor. From the evaporator, the refrigerant vapor flows back to the low-stage compressor, and the cycle repeats.

A compound system provides increased capacity, which is needed in applications where extremely low evaporator pressures (and corresponding low temperatures) are required. A compressor's efficiency is inversely proportional to its compression ratio. In other words, as the compression ratio of a compressor increases, its volumetric efficiency decreases. A single compressor would have difficulty producing the pressure differences required to achieve extremely low evaporator temperatures. However, a compound system divides the required work between two compressors.

For example, imagine a two-stage compound system in which the low-stage compressor has a 4.5:1 compression ratio and the high-stage compressor has a 4:1 compression ratio. The vapor enters the low-stage compressor at 15 psia and leaves the compressor at a pressure of 67.5 psia (15 psia × 4.5 = 67.5 psia). The refrigerant is cooled to remove superheat and then enters the high-stage compressor. The vapor leaves the high-stage compressor at a pressure of 270 psia (67.5 psia × 4 = 270 psia). The net result is a compression ratio of 18:1 (4 × 4.5 = 18, or 270 psi divided by 15 psi equals 18).

If a single compressor was capable of achieving this compression ratio, it would operate at extremely low efficiency. However, since the two compressors in the compound system have relatively low compression ratios, they work together to achieve the 18:1 compression with relatively high efficiency.

Another problem of using a single compressor to reach very high compression ratios is that the discharge temperature would be excessively high. The discharge temperature may be so high that it would cause the oil in the compressor to vaporize, ruining its lubricating properties. When two compressors are used to achieve the same very high compression ratio, the refrigerant can be cooled between the two stages.

In a typical compound system, a single temperature motor control operates all motors. A thermostatic expansion valve controls the flow of liquid refrigerant into the evaporator. Refrigerants commonly used include R-22, R-404A, and R-507. The pressures do not balance during the Off cycle, and the system remains pressurized, with a low side and a high side isolated from each other. Therefore, the compressor motors used in compound systems must be capable of starting under load. Compound installations usually operate under heavy service requirements. Condensers and refrigerant must be kept clean. Compressor valves must be kept in good condition.

Thinking Green

Intermediate Pressure in a Compound Compression System

The compressors in a compound compression system maintain three different pressures: the low-stage intake pressure, the intermediate pressure (low-stage discharge and high-stage intake), and the high-stage discharge pressure. To maximize the compressors' energy efficiency, the intermediate pressure should be set so that the percentage of pressure increase at compressor outlet is the same for both compressors.

Copyright Goodheart-Willcox Co., Inc.

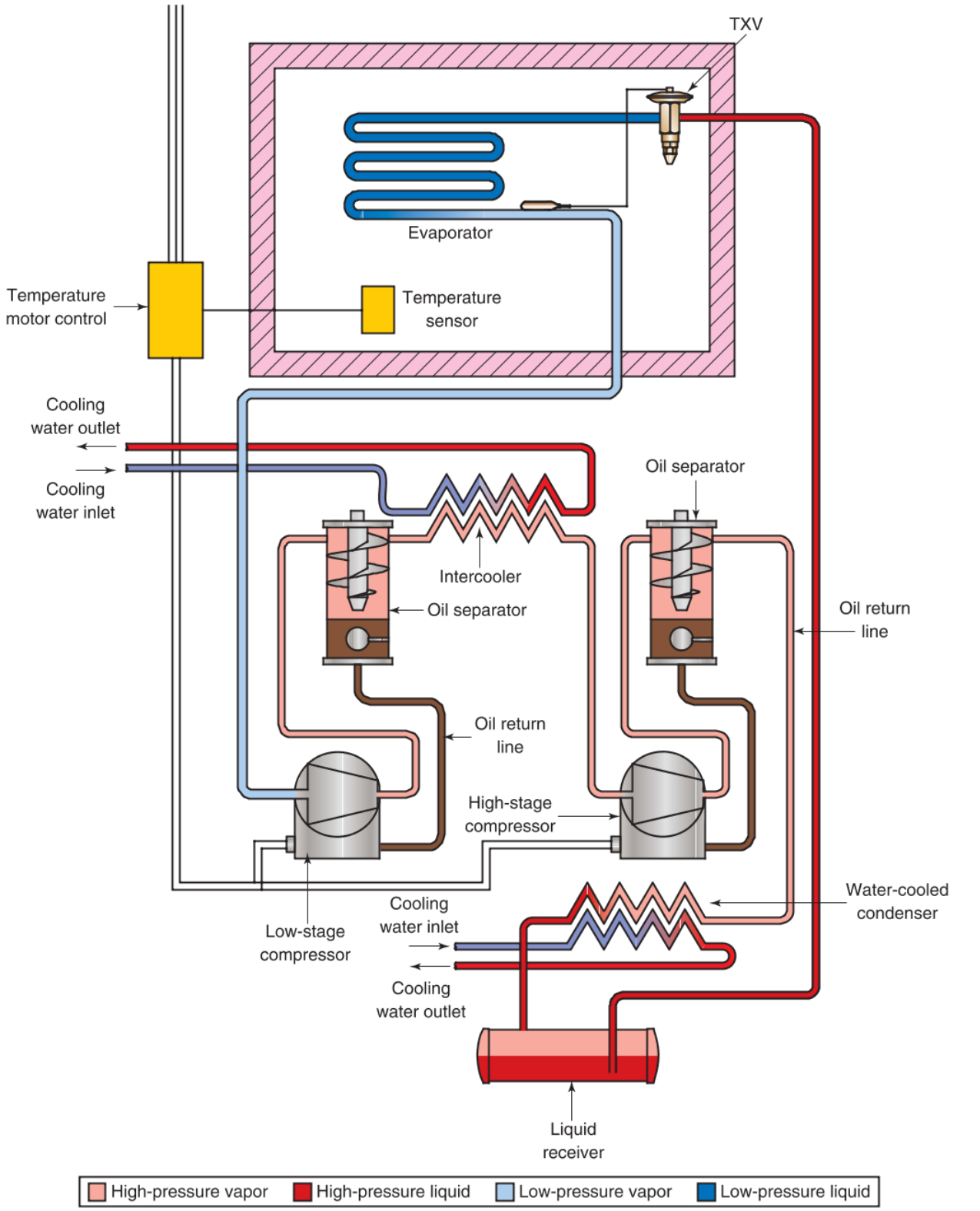

Goodheart-Willcox Publisher

Figure 49-6. These two compressors are connected in a series, making this a compound refrigeration system.

Copyright Goodheart-Willcox Co., Inc.

49.4.2 Cascade Refrigeration Systems

Cascade systems are often used in industrial processes where objects must be cooled to temperatures below –50°F (–46°C). A ***cascade refrigeration system*** is a multistage system that consists of two or more separate refrigeration subsystems with separate, isolated refrigerant circuits that work together to multiply cooling effect. The evaporator of the first-stage (high-stage) subsystem cools the condenser of the second-stage (low-stage) subsystem. The refrigerant circuit in each subsystem is completely separate, so the refrigerant in one subsystem never mixes with the refrigerant in the other subsystem. Although the refrigerant lines of the subsystems are not interconnected, the subsystems are said to be in series because the flow of heat has only one path to follow on its way from the conditioned space to the place where it is rejected. Like compound refrigeration systems, a cascade refrigeration system is divided into low and high stages based on pressure and temperature.

Figure 49-7 shows a cascade refrigeration system. Note that the two separate refrigeration subsystems interface at the cascade heat exchanger. The cascade heat exchanger contains the low-stage condenser and the high-stage evaporator. As the low-pressure liquid refrigerant in the high-stage evaporator vaporizes, it absorbs heat from the refrigerant in the low-stage condenser. This causes the low-stage refrigerant to condense.

Pro Tip

Moisture in Cascade Systems

Since cascade systems operate at very low temperatures, the refrigerant must be very dry. Any moisture in a cascade system would freeze at the needle seat of the TXV, stopping refrigerant flow.

The biggest advantage of cascade systems is that they have two separate refrigerant circuits, each charged with a different refrigerant. The refrigerant used in

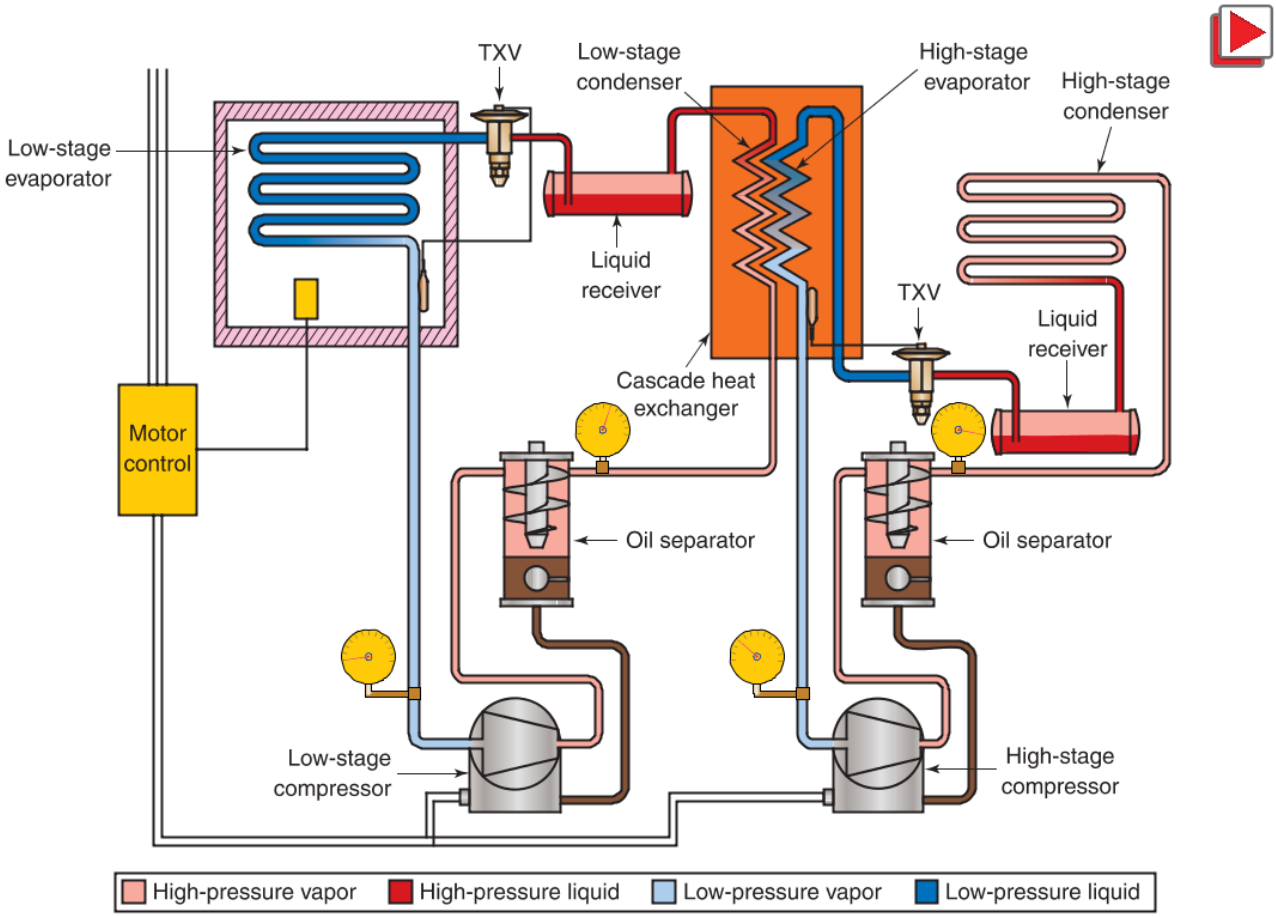

Goodheart-Willcox Publisher

Figure 49-7. A cascade refrigeration system combines two complete refrigeration subsystems in order to achieve temperatures below –50°F (–46°C).

Copyright Goodheart-Willcox Co., Inc.

the high-stage has a higher condensing and evaporating temperature. The refrigerant in the low-stage has a lower condensing and evaporating temperature. The refrigerant in the low-stage subsystem is called the *secondary refrigerant*. This refrigerant provides cooling to the conditioned area. The refrigerant in the high-stage subsystem is called the *primary refrigerant*. This refrigerant cools the secondary refrigerant and rejects the heat from the system. Having two refrigerants allows the use of the best refrigerant for each application. As a result, the compressors in the two subsystems each operate at an efficient compression ratio.

Pro Tip

Cascade System Refrigerants

In many cascade systems, CO_2 (R-744) is used as the secondary refrigerant and ammonia (R-717) is used as the primary refrigerant. Other popular secondary refrigerants include R-23 and R-508h. Other popular primary refrigerants include R-134a, R-22, and R-507.

Both the low-stage subsystem and the high-stage subsystem of a cascade system operate at the same time. The low-pressure liquid refrigerant in the high-stage evaporator cools the high-pressure vapor in the low-stage condenser. The evaporator of the low-stage subsystem supplies the cooling effect to the conditioned space.

Pro Tip

Cascade Heat Exchangers

Although there are different designs for cascade heat exchangers, the most common combine the functions of a shell-and-tube condenser and a flooded evaporator.

Each subsystem in a cascade system has a thermostatic expansion valve (TXV) for refrigerant control. TXVs close during the Off cycle; therefore, the pressures on the high and low sides of the subsystems do not balance. This means that the compressor motors used on cascade systems must be capable of starting under load. A temperature-sensing bulb on the low-stage evaporator provides input to the motor control, which is used to control both compressor motors.

Pro Tip

Off Cycle Balancing

When replacing a TXV in a cascade system, be certain to look at all its specifications. If the subsystems are not to balance during the Off cycle, ensure that the replacement TXV does not have a bleed port or means of balancing pressures. These features may be internal and difficult or impossible to tell by looking at the valve. Thoroughly review system requirements and product specifications.

The low-stage subsystem must use special refrigerant oil that is wax-free, moisture-free, and able to flow at extremely low temperatures. Oil separators should be installed in the discharge lines on both subsystems. This will help keep adequate oil in the compressors.

Caution

Oil Return Piping Practices

The oil that is carried by the refrigerant must be returned to the compressor. Since the viscosity of oil increases inside an evaporator, special attention should be given to proper suction piping installation. The piping design should allow oil to gradually flow back to the compressor oil sump due to gravity.

49.5 Secondary Loop Refrigeration Systems

An emerging trend in commercial refrigeration installations and retrofits is secondary loop refrigeration systems. These are comparable to cascade refrigeration systems; however, the secondary refrigerant is generally a fluid that does not change phases during normal operation. A ***secondary loop refrigeration system*** is a commercial refrigeration system in which a secondary loop circulates a nonphase-changing fluid for absorbing heat from a conditioned space and transfers that heat through a heat exchanger to a phase-changing refrigerant in a direct expansion refrigeration circuit, **Figure 49-8**.

Secondary loops stretch from a heat exchanger in the mechanical room throughout the entire building to each of the different conditioned spaces, such as display cases and walk-in coolers. From the mechanical room, the secondary refrigerant is pumped and distributed to each cooling coil where it absorbs heat from the conditioned spaces. When the secondary refrigerant flows back to the mechanical room, it passes through a heat exchanger that functions as the primary loop's evaporator. Heat absorbed into the secondary loop from the conditioned spaces is absorbed into the primary loop in the heat exchanger. A compressor in the primary loop pumps the primary refrigerant to a condenser that displaces the heat.

A traditional direct expansion commercial refrigeration system has only a single refrigerant circuit with a large charge of expensive refrigerant. A secondary loop refrigeration system uses an expansive, building-wide secondary loop. This means that the primary loop (a direct expansion circuit) can be confined to a smaller area, such as the mechanical room or roof. Reducing the size of the primary loop greatly reduces the amount of direct expansion (phase changing)

Copyright Goodheart-Willcox Co., Inc.

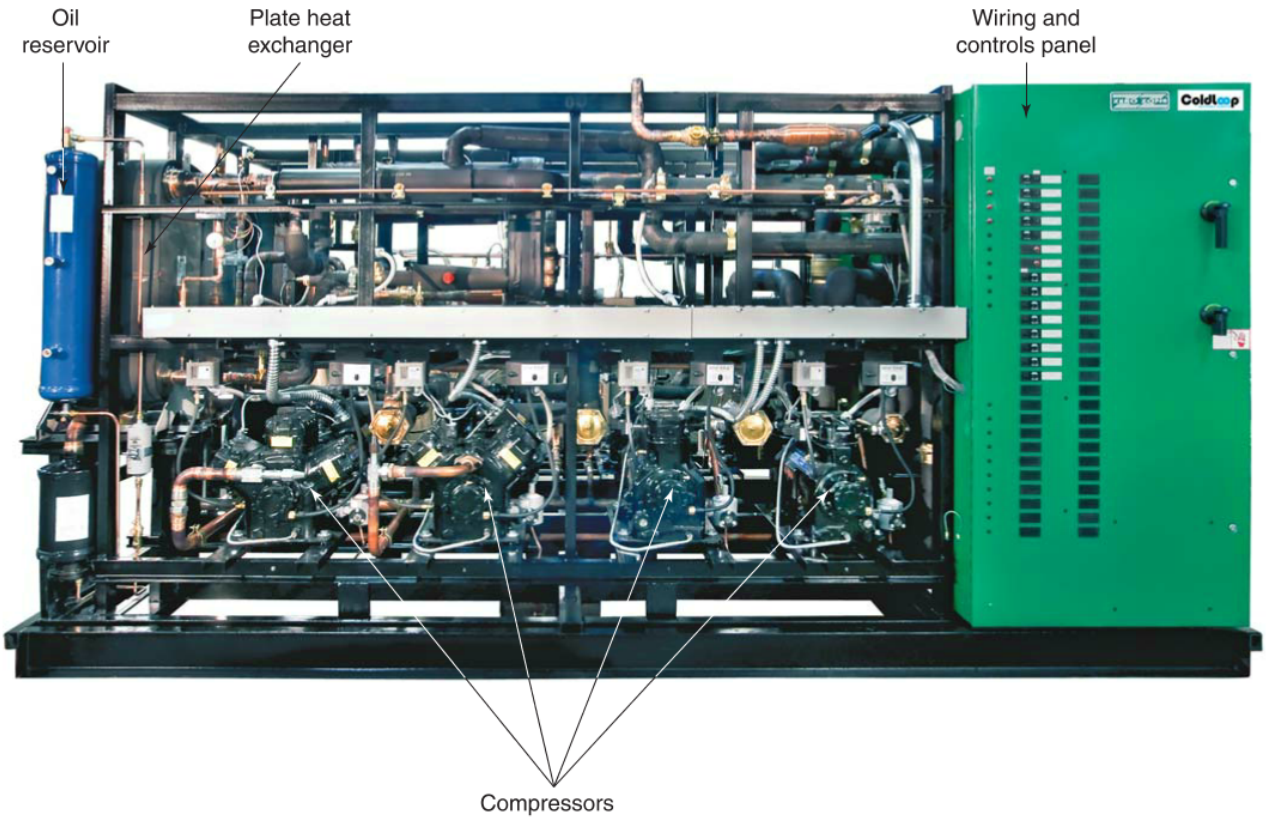

Zero Zone, Inc.

Figure 49-8. A secondary loop refrigeration system is often paired with a parallel compressor rack to provide cooling for the secondary refrigerant. This system has multiple compressors, secondary loop pumps, heat exchangers, and numerous control devices.

refrigerant necessary for a secondary loop refrigeration system. Since secondary loops use a refrigerant that costs much less than a primary loop direct expansion refrigerant, the total refrigerant cost for the entire system is greatly reduced. This lower cost for refrigerant is a great incentive for using a secondary loop refrigeration system.

While primary loops are built with copper ACR tubing, secondary loops are often built using plastic piping, such as ABS. This results in far fewer copper joints, which reduces the chance of a direct expansion-type refrigerant leak. Also, the cost of plastic pipe is less than copper tubing. However, to maximize efficiency by minimizing the absorption of heat from an unconditioned space, secondary loop piping should be insulated, **Figure 49-9**.

Secondary loop pipes operate under lower pressure than copper pipes. The secondary loop usually circulates a nonphase-changing refrigerant, such as a glycol solution, that absorbs the heat from the conditioned spaces. The secondary refrigerant does not evaporate, but it still absorbs sufficient heat for refrigeration. Instead of an expansion valve or traditional

Zero Zone, Inc.

Figure 49-9. The piping and components circulating the secondary refrigerant are heavily insulated to maximize system efficiency.

Copyright Goodheart-Willcox Co., Inc.

refrigerant control, secondary loops use balance valves that control the flow of the secondary refrigerant through the flooded evaporators. Rather than compressors, secondary loops use circulating pumps to move the secondary refrigerant, **Figure 49-10**.

In a secondary loop refrigeration system, the temperature of a conditioned space is controlled by the flow of the secondary refrigerant. The flow of secondary refrigerant and the temperature of a conditioned space have an inverse relationship. As one increases, the other decreases. The greater the flow of secondary refrigerant, the greater the heat absorption and the lower the conditioned space temperature. Reducing the flow reduces heat absorption and allows conditioned space temperature to increase, **Figure 49-11**.

The secondary loop has a few additional components not normally found in direct expansion systems. One of these is an air separator, which traps air that is circulating with the secondary refrigerant. Another secondary loop component is an expansion tank, which is a cylinder containing a pressure responsive bladder that is used to account for changes in secondary loop pressure, **Figure 49-12**.

Secondary loop refrigerant pressure can change due to thermal expansion, a small leak, or during service. Thermal expansion occurs when a secondary refrigerant warms during the Off cycle or long shutdowns when operating temperature may rise to ambient temperature. Secondary refrigerants are often dyed so that leak detection is less difficult.

Thinking Green

GreenChill Certification

The EPA's GreenChill Store Certification Program for Food Retailers is a voluntary program that recognizes stores that use environmentally friendly refrigeration systems. The refrigerant emission rates for GreenChill certified stores are estimated to be only 50% of the industry average.

To participate in the program, the store must submit information about its heat load, refrigeration system, and refrigerant usage and loss. The EPA will review the application and certify the store if it is GreenChill compliant. The certification lasts for one year, and stores can refer to the certification as part of their marketing strategy to environmentally conscious customers.

Zero Zone, Inc.

Figure 49-10. These two pumps circulate a nonphase-changing refrigerant throughout the building to individual refrigerated display cases.

Secondary Loop Refrigerant and Balance Valve Relationship

Balance Valve Position	Refrigerant Flow	Heat Absorption	Conditioned Temperature
Open more	↑	↑	↓
Close more	↓	↓	↑

Goodheart-Willcox Publisher

Figure 49-11. This chart shows the relationship of balancing valve position, secondary refrigerant flow, and conditioned space temperature.

Zero Zone, Inc.

Figure 49-12. These secondary loop components have been incorporated into the refrigeration system on the parallel compressor rack in the building's mechanical room.

Copyright Goodheart-Willcox Co., Inc.

Chapter Review

Summary

- The two basic types of commercial systems are packaged systems and split systems. Packaged systems are refrigeration units designed, built, and shipped by the manufacturer. Split systems are assembled at the jobsite.
- Large commercial refrigeration systems use various pressure regulators, flow controls, and sensors to achieve accurate temperature control and efficient operation. Understanding the operation and purpose of the many components used in a commercial refrigeration system is necessary to service and maintain these complex systems.
- Commercial refrigeration systems with more than one evaporator are called multiple-evaporator systems. These may be designed so one evaporator maintains a lower temperature than the other evaporator. A higher temperature evaporator must be equipped with an evaporator pressure regulator (EPR).
- Modulating refrigeration systems are designed to handle varying heat loads. Instead of merely cycling on or off, a modulating refrigeration system operates at different capacities based on the heat load.
- One method of modulating refrigeration is to use multiple compressors operating in parallel. The compressors are cycled on and off in combination as needed to match the load. Another method of modulating refrigeration is to use a single, variable capacity compressor. A third method of modulating refrigeration is to use hot-gas bypass to reduce the capacity of the system as needed to match the heat load.
- Multistage refrigeration systems have more than one stage of compression and are used to reach extremely cold temperatures. The two types of multistage refrigeration are cascade and compound.
- A compound refrigeration system uses two compressors connected in series. The low-stage compressor discharges into the inlet of the high-stage compressor. An intercooler between stages reduces high superheat. This arrangement achieves a higher compression ratio than a single compressor with fewer complications and can produce extremely low temperatures.
- A cascade refrigeration system consists of two or more refrigeration subsystems with separate, isolated refrigerant circuits connected in series. They are joined in a heat exchanger in which the high-stage evaporator cools the low-stage condenser.
- A secondary loop refrigeration system has two refrigerant loops. The secondary loop absorbs heat from a conditioned space into a nonphase-changing fluid. The primary loop circulates a phase-changing refrigerant that absorbs heat from the secondary loop.
- The benefits of a secondary loop refrigeration system include a reduced direct expansion refrigerant charge, less chance of refrigerant leaks, and a lower cost of refrigerant and piping.

Review Questions

Answer the following questions using the information in this chapter.

1. A commercial refrigeration system that is designed, built, charged, tested, and shipped ready for operation by the manufacturer is referred to as a _____ system.
   A. bundled
   B. compound
   C. packaged
   D. split
2. What is the benefit of using an EPR on one of two evaporators that share a suction line and a liquid line?
   A. An EPR eliminates the need for pressure and temperature controls.
   B. Each evaporator can maintain a different temperature.
   C. The EPR will prevent backflow during the Off cycle.
   D. The two evaporators can share a single TXV.
3. A multiple-compressor system used for modulating refrigeration _____.
   A. actually only includes one compressor
   B. can only operate all or none of the compressors at once
   C. uses two or more compressors connected in series
   D. uses two or more compressors connected in parallel

Copyright Goodheart-Willcox Co., Inc.

4. Unloading one or more compressor cylinders in a variable-capacity, single-compressor system can only be done in a _____ compressor.
   A. centrifugal
   B. reciprocating
   C. screw
   D. scroll
5. A primary method of modulating a system's capacity using a single compressor is by _____.
   A. closing the liquid line solenoid valve
   B. changing the speed of the compressor
   C. restricting flow into the condenser
   D. reversing the flow of refrigerant
6. The hot-gas bypass method of capacity control is mainly used for _____.
   A. high-load periods
   B. high-side pressure relief
   C. low-load periods
   D. Off cycle system balancing
7. Which of the following statements about compound refrigeration systems is *not* true?
   A. Compound systems can achieve high compression ratios more efficiently than single compressor systems.
   B. A compound system may have a single evaporator.
   C. Multiple compressors are used in parallel.
   D. All of the above.
8. Which of the following best describes the purpose of an intercooler in a compound refrigeration system?
   A. The intercooler performs the same function as the condenser (subcooling) on a single-compressor refrigeration system.
   B. The intercooler performs the same function as the evaporator on a single-compressor refrigeration system.
   C. The intercooler removes superheat from the suction gas before it enters the low-stage compressor.
   D. The intercooler removes superheat from the compressed gas as it flows from the low-stage compressor into the high-stage compressor.
9. Which of the following statements regarding cascade refrigeration systems is *not* true?
   A. The high-stage and low-stage subsystems typically use different refrigerants.
   B. The high-stage evaporator cools the low-stage condenser.
   C. The high-stage subsystem is normally off and only switched on if the heat load increases.
   D. A single motor control controls both the high-stage and low-stage compressors.
10. A commercial refrigeration system that absorbs heat from a conditioned space into a nonphase-changing fluid and transfers that heat through a heat exchanger into a separate circuit that circulates a phase-changing refrigerant is a(n) _____ system.
    A. compound refrigeration
    B. multiple-compressor
    C. multiple-evaporator
    D. secondary loop refrigeration

Copyright Goodheart-Willcox Co., Inc.

CHAPTER 50 Understanding Heat Loads and System Thermodynamics

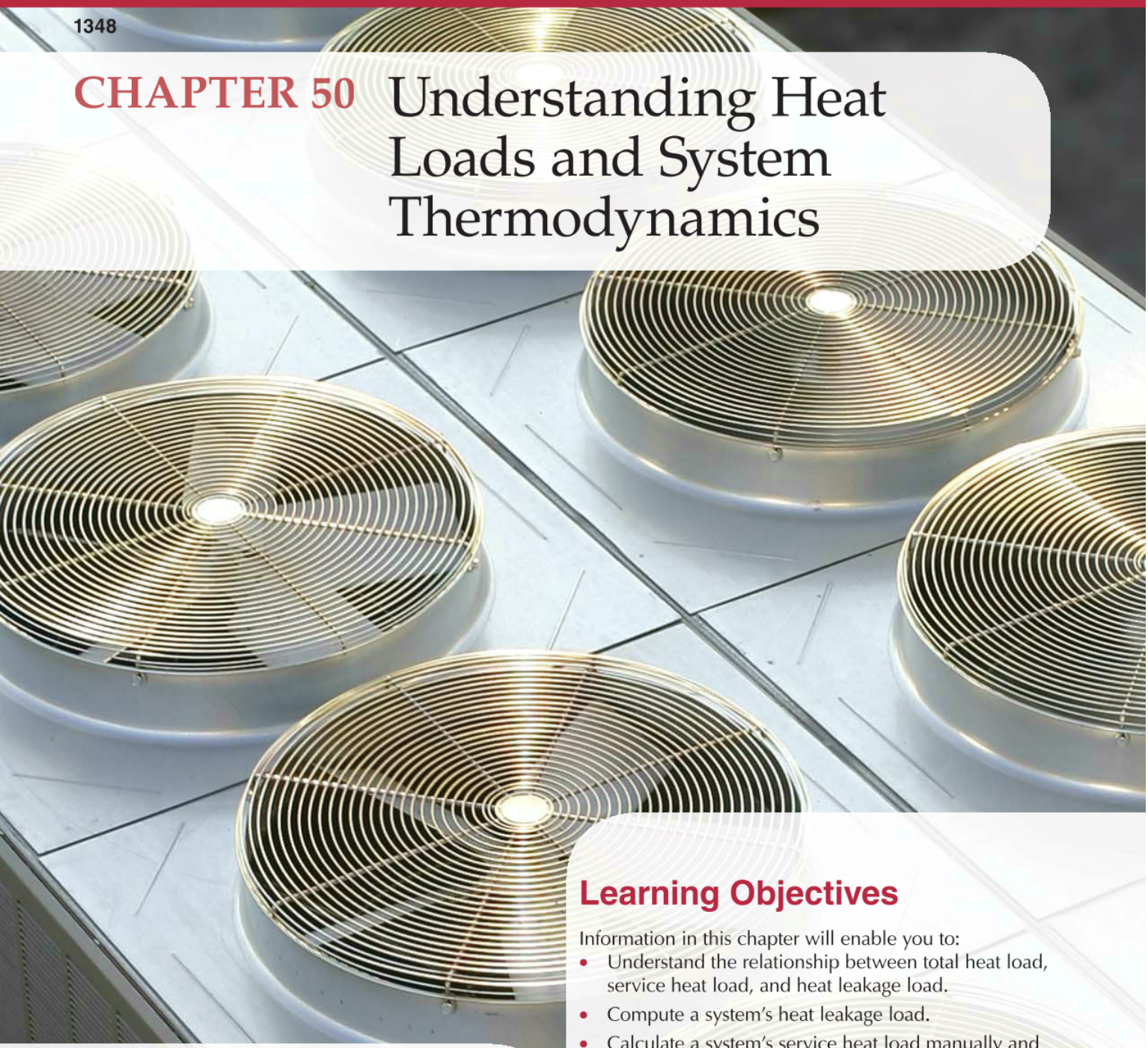

Learning Objectives

Information in this chapter will enable you to:

- Understand the relationship between total heat load, service heat load, and heat leakage load.
- Compute a system's heat leakage load.
- Calculate a system's service heat load manually and by using manufacturer's tables.
- Use heat leakage load, service heat load, and all applicable miscellaneous heat loads to calculate a system's total heat load.
- Compute the total heat load for a water cooler.
- Summarize the thermodynamic principles at work in the basic refrigeration cycle.
- Identify the various lines on a pressure-enthalpy diagram.
- Interpret the graphs of different refrigeration cycles on pressure-enthalpy diagrams.

Chapter Outline

50.1 Heat Loads
- 50.1.1 Heat Leakage (Thermal Conduction) Load
- 50.1.2 Service Heat Load
- 50.1.3 Calculating the Total Heat Load
- 50.1.4 Heat Loads for Water Coolers

50.2 Thermodynamics of the Basic Refrigeration Cycle
- 50.2.1 Reading a Pressure-Enthalpy Diagram
- 50.2.2 Practical Pressure-Enthalpy Cycles

Technical Terms

adiabatic expansion
effective latent heat
heat leakage load
miscellaneous heat loads
product heat load
refrigerant quality
respiration heat
saturated liquid
service heat load
total heat load

Review of Key Concepts

Reviewing these concepts from earlier chapters will help you understand new concepts presented in this chapter:

- The amount of heat energy required to raise the temperature of one pound of a substance by 1° Fahrenheit or one kilogram of a substance by 1 Kelvin is the substance's specific heat capacity. (Chapter 4)
- The specific heat capacity of a substance is the amount of heat added or released to change the temperature of one pound of a substance by 1°F. In the SI system, specific heat capacity is the amount of heat needed to change one kilogram of a substance by one degree Kelvin. (Chapter 4)
- Enthalpy is the total heat energy a substance contains, measured from an accepted reference temperature. (Chapter 4)
- Sensible heat is the heat energy absorbed or released to change the temperature of a substance. Latent heat has no effect on the temperature of a substance, because it is heat absorbed or released as a substance changes state. For example, the latent heat added to a liquid to change it into a gas or the latent heat removed from a gas to change it into a liquid is the latent heat of vaporization. (Chapter 4)
- Adiabatic compression is the compressing of a gas without gaining heat from or losing heat to its surroundings. This occurs in the cylinder of reciprocating compressors. (Chapter 5)
- Boyle's law states that if temperature is held constant, volume varies inversely with pressure. Charles' law states that if pressure is held constant, volume varies in direct proportion with temperature. Gay-Lussac's law states that if volume is held constant, pressure and temperature vary directly. The combined gas law states that the ratio among a gas's volume, temperature, and pressure remains constant. (Chapter 5)
- A material's K-value is a measure of its thermal conductivity. It indicates how much heat will transfer through one square foot of the material one inch thick in one hour when there is a 1°F temperature difference between the two sides of the material. (Chapter 37)
- A material's thermal conductance, or C-value, is similar to its K-value, but it is not dependent on the thickness of the material. (Chapter 37)
- A material's R-value is a measure of its thermal resistance. It is the reciprocal of the material's K-value. The higher the material's R-value, the slower heat will transfer through the material. (Chapter 37)
- The U-value of a component is a measure of its thermal transmittance. It is similar to a component's C-value, but takes into account the insulating effect of boundary air films. (Chapter 37)

Introduction

The two basic types of commercial refrigeration systems are packaged (unitary) and split (site-engineered) systems. Packaged systems, such as ice machines and dispensing freezers, are delivered from the manufacturer with the refrigerated enclosure and all components preassembled. The manufacturer has chosen the correct evaporator and condensing unit and has designed the cabinet to handle a specific refrigeration job.

Split or "site engineered" refrigeration systems are units such as walk-in coolers or multiple-evaporator display cases. These units require that the service technician select the components (such as the evaporator and condensing unit) that will be used for the specific application.

To properly design and construct a split refrigeration system, the technician must understand the heat loads that the system will be required to remove. The components must be properly sized to match the system to its intended use. When selecting components, the technician must choose a condensing unit and evaporator with enough capacity to remove the heat load while still providing adequate defrosting and humidity control. Also, because refrigeration systems are not designed to operate continuously, the system must have sufficient capacity to handle the maximum heat load within its normal operating cycle.

Video

- Understanding Heat Loads

This chapter will explain heat loads and the thermodynamics of system operation. Chapter 51, *Commercial Refrigeration Component Selection* will explain how to use that information to properly size a system. The heat load calculations presented in this chapter are given in US Customary units (such as pounds, Btu, and feet). SI conversion factors are explained in the *Appendix*.

50.1 Heat Loads

Simply put, *heat load* is the amount of heat that must be removed from a conditioned space over a set period of time in order to maintain the desired temperature in that space. To determine the heat load, a technician must calculate the total amount of heat that must be removed every 24 hours in order to hold the temperature at its desired level. The heat load is measured in Btu (British thermal units). A Btu is the amount of heat required to raise the temperature of one pound of water one degree Fahrenheit.

When determining the total heat load, heat leakage into the cabinet and the service heat load must be considered. If the inside of the cabinet is cooler than the air outside of the cabinet, heat from the surrounding air is transferred through the materials of the cabinet to the space inside. The amount of heat that is transferred into the cabinet is referred to as the ***heat leakage load***. The amount of exposed surface, the thickness and type of insulation, and the temperature difference between the inside and outside of the cabinet all affect the amount of heat leakage that occurs.

The ***service heat load*** accounts for the temperature of articles put into the cabinet, their specific heat, any heat they generate, and any latent heat they contain. It also accounts for any additional heat brought into the cabinet due to operation. This includes air changes and the heat generated inside the cabinet by fans, lights, and other electrical devices.

The ***total heat load*** is the sum of the loads resulting from heat leakage, air changes, stored products, and miscellaneous heat sources. After determining the total heat load, a technician can determine the size of condensing unit and evaporator needed for the system.

50.1.1 Heat Leakage (Thermal Conduction) Load

The heat leakage load is the total amount of heat that leaks through the walls, windows, ceiling, and floor of the cabinet per unit of time (usually 24 hours). Research organizations, manufacturers, and refrigeration associations have determined the rate at which heat leaks through various materials. Charts and tables based on these calculations are used by engineers and technicians.

The following are five variables that affect heat leakage:

1. Time. Heat leakage is a process that occurs over time. Therefore, the total amount of heat leakage increases with time. The standard time period that is used to measure heat leakage rates in refrigeration applications is 24 hours. A one-hour period is used to measure heat leakage rates in air conditioning applications.
2. Temperature difference. The difference in temperature between the inside and outside of the cabinet is directly proportional to the rate of heat leakage. The greater the temperature difference, the more heat will transfer through the wall in a given period of time. The room temperature used to calculate heat leakage rates is the average summer temperature. In the United States, most locations have summer design temperatures ranging between 90°F and 105°F (32°C and 40°C). See **Figure 50-1**. This value can be reduced to 75°F or 80°F (25°C or 27°C) if the cabinet is located in an air-conditioned space.
3. Type of material. The rate at which heat leaks through a wall also depends on the materials the wall is made of. Expanded polystyrene (foam), for instance, will insulate approximately six times better than wood. Some insulating materials, however, are more costly than others.
4. Thickness of materials. The thicker the material, the less heat will flow through it in a given period of time. For a given length of time, nearly twice as much heat will leak through a wall with 1″ (2.5 cm) insulation than through a wall having 2″ (5 cm) of the same insulation.
5. External area of cabinet. A larger surface area allows greater heat flow. The common unit used to measure surface area in heat flow calculations is the square foot. The surface area is always calculated using the outside dimensions of the cabinet.

K-Values, C-Values, R-Values, and U-Values

As mentioned earlier, the type and thickness of the materials used to construct the cabinet are key factors in determining the rate at which heat can leak through it. In order to compare the materials, a standardized method of measuring their thermal characteristics must be used. In refrigeration work, K-values, C-values, R-values, and U-values are the measurements used to describe thermal characteristics of construction materials. However, each of these values measures thermal characteristics in

Copyright Goodheart-Willcox Co., Inc.

Summer Design Temperatures					
State	Design Dry Bulb		State	Design Dry Bulb	
	°F	°C		°F	°C
Alabama	95	29	**Nevada**	95	35
Alaska	74	23	**New Hampshire**	90	32
Arizona	105	41	**New Jersey**	92	33
Arkansas	98	37	**New Mexico**	95	35
California			**New York**	90	32
lower	86	30	**North Carolina**	95	35
middle	94	34	**North Dakota**	93	34
upper	83	28	**Ohio**	90	32
Colorado	92	33	**Oklahoma**	102	39
Connecticut	88	31	**Oregon**	90	32
Delaware	93	34	**Pennsylvania**	92	33
Dist. of Col.	94	34	**Rhode Island**	87	31
Florida			**South Carolina**	95	35
upper	96	36	**South Dakota**	95	35
lower	93	34	**Tennessee**	96	36
Georgia	95	35	**Texas**	101	38
Hawaii	87	31	**Utah**	95	35
Idaho	94	34	**Vermont**	87	31
Illinois			**Virginia**	95	35
upper	95	35	**Washington**	90	32
lower	97	36	**West Virginia**	94	34
Indiana	95	35	**Wisconsin**	90	32
Iowa	95	35	**Wyoming**	90	32
Kansas			**Canadian Provinces and Territories**	**Design Dry Bulb**	
upper	97	36		°F	°C
lower	100	38	**Alberta**	78	26
Kentucky	95	35	**British Columbia**	75	24
Louisiana	98	37	**Manitoba**	80	27
Maine	88	31	**New Brunswick**	82	28
Maryland	94	34	**Newfoundland**	72	22
Massachusetts	90	32	**Northwest Territory**	65	18
Michigan	88	31	**Nova Scotia**	78	26
Minnesota	90	32	**Ontario**	79	26
Mississippi	97	36	**Prince Edward Island**	77	25
Missouri	98	37	**Quebec**	74	23
Montana	88	31	**Saskatchewan**	83	28
Nebraska	97	36	**Yukon Territory**	71	22

Goodheart-Willcox Publisher

Figure 50-1. Table listing summer design temperatures. If the space containing the refrigeration system is unconditioned or outdoors, these values can be used as ambient temperatures for calculating heat loads.

Copyright Goodheart-Willcox Co., Inc.

a slightly different way. Each of these values was thoroughly explained in Chapter 37, *Heating and Cooling Loads*.

K-Values (Thermal Conductivity) and C-Values (Thermal Conductance)

A material's K-value represents that material's thermal conductivity. It is a measure of how much heat can pass through one square foot of the material, one inch thick, in an hour when there is a temperature difference of 1°F (0.56°C) between one side of the material and the other. A material's K-value does not account for any boundary air film or liquid film on either side of the material. As you might expect, the symbol used to represent thermal conductivity (K-value) in formulas and equations is *K*.

Remember that a material's K-value represents the rate at which heat is transferred through a one-inch thickness of the material. If the material is thicker than 1″, it will take more time for the heat to travel through it. If the material is thinner than 1″, it will take less time for the heat to pass through it. Therefore, if the material is not exactly 1″ thick, the material's K-value must be divided by the actual thickness of the material to accurately calculate how long it takes for heat to pass through it. The resulting value is known as the material's thermal conductance, or C-value, and is measured in units of Btu/hr·ft^2·°F. For materials that are exactly 1″ thick, the K-values and the C-values are equal.

$$\text{Thermal conductance (C)} = \frac{K}{X}$$

where

K = thermal conductivity (in Btu·in/hr·ft^2·°F)
X = thickness of the material (in inches)

Example:

If the insulation of a cabinet box is 4″, what is the thermal conductance?

Solution:

$$C = \frac{K}{X}$$
$$= \frac{K}{4''}$$

Example:

If the insulation of a cabinet box is 1/2″, what is the thermal conductance?

$$C = \frac{K}{X}$$
$$= \frac{K}{1/2''}$$

Dividing a value by a fraction is awkward. To change the fraction into a decimal value, divide its two values. One divided by two (1 ÷ 2) equals 0.5.

$$C = \frac{K}{.5''}$$

To find the heat leakage of walls made of multiple materials (composite walls), the first step is to find the thermal conductivity of each material used in the construction. The thermal conductivity of some common materials is shown in the *Appendix*.

R-Values (Thermal Resistance)

When calculating the heat leakage rates for walls (or other components) made from multiple materials, technicians base their calculations on the thermal resistance of the materials rather than their thermal conductivity (K-value) or thermal conductance (C-value). A material's or component's resistance to heat flow is commonly known as its R-value and is represented by the letter *R* in formulas and equations. Resistance to heat flow is the inverse of thermal conductance. It is measured in units of hr·ft^2·°F/Btu.

Formula:

$$\text{Thermal resistance (R)} = \frac{1}{C}$$

Total resistance to heat flow in a composite wall (or other component) is the sum of the thermal resistance of each material in the wall. The example below shows the equation for a wall constructed of two materials, but the equation can be expanded for any number of materials:

$$R_T = R_1 + R_2$$

where

R_T = total thermal resistance
R_1 = thermal resistance of material 1
R_2 = thermal resistance of material 2

Example:

A custom-built cabinet wall is constructed of 1″ thick particle board, 1/2″ Celotex, and 1/4″ polyurethane insulation as shown in **Figure 50-2**. The K-value for the particle board is 0.94, the K-value for Celotex is 0.31, and the K-value for polyurethane is 0.16. Determine the total thermal resistance (R_T) in the composite wall.

Solution:

The K-values provided indicate how quickly heat would flow through a 1″ thickness of the materials, given a 1°F temperature difference from one side of the material to the other. However, the Celotex is only 1/2″ thick and the polyurethane is only 1/4″ thick. Each material's K-value must be divided by its thicknesses to determine the C-value (thermal conductance) of the material:

Copyright Goodheart-Willcox Co., Inc.

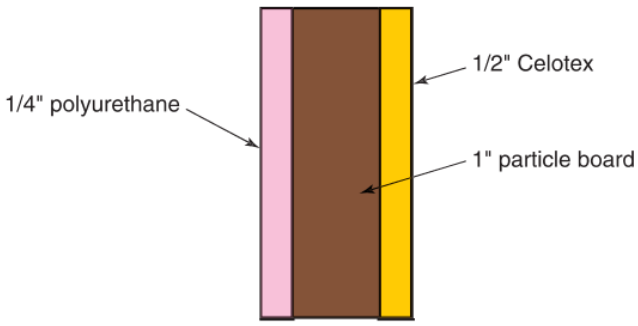

Goodheart-Willcox Publisher

Figure 50-2. Cross section of a custom-built cooler wall.

$$C_1 = \frac{K_1}{X_1} = \frac{0.94}{1} = 0.94 \text{ Btu/hr·ft}^2\text{·°F}$$

$$C_2 = \frac{K_2}{X_2} = \frac{0.31}{1/2} = 0.62 \text{ Btu/hr·ft}^2\text{·°F}$$

$$C_3 = \frac{K_3}{X_3} = \frac{0.16}{1/4} = 0.64 \text{ Btu/hr·ft}^2\text{·°F}$$

The reciprocals of the individual C-values provide the thermal resistance for each material:

$$R_1 = \frac{1}{C_1} = \frac{1}{0.94} = 1.06 \text{ hr·ft}^2\text{·°F/Btu}$$

$$R_2 = \frac{1}{C_2} = \frac{1}{0.62} = 1.61 \text{ hr·ft}^2\text{·°F/Btu}$$

$$R_3 = \frac{1}{C_3} = \frac{1}{0.64} = 1.56 \text{ hr·ft}^2\text{·°F/Btu}$$

The thermal resistances are then added together to calculate the total resistance in the wall:

$$R_T = R_1 + R_2 + R_3 = 1.06 + 1.61 + 1.56 = 4.23 \text{ hr·ft}^2\text{·°F/Btu}$$

U-Values (Thermal Transmittance)

In the above example, the R-value was calculated for a cabinet constructed of polyurethane, particle board, and Celotex. The value calculated above represents the rate at which heat leaks through the materials in the cabinet wall. But, the materials used to construct the door are not the only factors to consider when determining how quickly heat leaks through the wall. There are also thin films of stagnate air that cling to the outside and inside surfaces of the wall.

These air films are attracted to the wall surfaces and are known as inside and outside boundary air films. Because of the attraction, the air films do not move as quickly as the surrounding air. This stagnation causes the boundary air films to act like thin layers of insulation that reduce the rate at which heat is transmitted through the wall. The measurement that takes these factors into account is called thermal transmittance or U-value. A material's thermal transmittance is equal to the inverse of the sum of all thermal resistances in the material, including the thermal resistance of the boundary air films:

Formula:

$$U = \frac{1}{R_{of} + R_1 + R_{if}}$$

where

R_{of} = thermal resistance of outside boundary air film
R_1 = thermal resistance of material 1
R_{if} = thermal resistance of inside boundary air film

Example:

The wall in **Figure 50-3** includes an outside film of air with a thermal conductance (C-value) of 6.0 Btu/hr·ft²·°F and an inside film of air with a thermal conductance of 1.65 Btu/hr·ft²·°F. The K-value for the particle board is 0.94, the K-value for Celotex is 0.31, and the K-value for polyurethane is 0.16. What is the U-value of the wall?

Solution:

Begin by determining the thermal resistances of the materials and boundary air films:

Resistance of outside boundary air film:

$$R_{of} = \frac{1}{C_{of}} = \frac{1}{6.0 \text{ Btu/ hr·ft}^2\text{·°F}} = 0.17 \text{ hr·ft}^2\text{·°F /Btu}$$

14

Copyright Goodheart-Willcox Co., Inc.

Resistance of 1/4″ polyurethane:

$$C_1 = \frac{K_1}{X_1} = \frac{0.16}{0.25''} = 0.64 \text{ Btu/ hr·ft}^2\text{·°F}$$

$$R_1 = \frac{1}{C_1} = \frac{1}{0.64 \text{ Btu/ hr·ft}^2\text{·°F}} = 1.56 \text{ hr·ft}^2\text{·°F /Btu}$$

Resistance of 1″ particle board:

$$C_2 = \frac{K_2}{X_2} = \frac{0.94}{1''} = 0.94 \text{ Btu/hr·ft}^2\text{·°F}$$

$$R_2 = \frac{1}{C_2} = \frac{1}{0.94 \text{ Btu/ hr·ft}^2\text{·°F}} = 1.06 \text{ hr·ft}^2\text{·°F/Btu}$$

Resistance of 1/2″ Celotex:

$$C_3 = \frac{K_3}{X_3} = \frac{0.31}{0.5''} = 0.62 \text{ Btu/ hr·ft}^2\text{·°F}$$

$$R_3 = \frac{1}{C_3} = \frac{1}{0.62 \text{ Btu/ hr·ft}^2\text{·°F}} = 1.61 \text{ hr·ft}^2\text{·°F /Btu}$$

Resistance of inside boundary air film:

$$R_{if} = \frac{1}{C_{if}} = \frac{1}{1.65 \text{ Btu/ hr·ft}^2\text{·°F}} = 0.61 \text{ hr·ft}^2\text{·°F/Btu}$$

Next, the resistances of the individual materials are added together to calculate the total resistance for the wall:

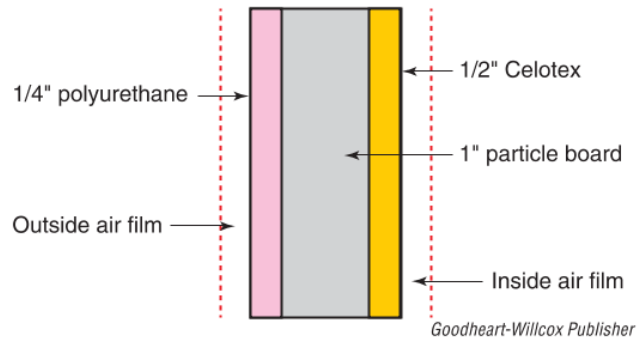

Figure 50-3. Cross section of a cooler wall, including inside and outside boundary air films.

$$R_T = R_{of} + R_1 + R_2 + R_3 + R_{if} = 0.17 + 1.56 + 1.06 + 1.61 + 0.61 = 5.01 \text{ hr·ft}^2\text{·°F/Btu}$$

The U-value for the composite wall is the reciprocal of the total thermal resistance of the wall:

$$U_T = \frac{1}{R_T} = \frac{1}{5.01 \text{ hr·ft}^2\text{·°F /Btu}} = 0.20 \text{ Btu/ hr·ft}^2\text{·°F}$$

Calculating Area

The area of a cabinet is measured from the outside. There are six surfaces: four walls, the ceiling, and the floor, as shown in **Figure 50-4**. Usually the floor and ceiling have the same area, as do the areas of walls opposite each other. To determine the total outside area of a typical rectangular box cabinet:

1. Multiply the width of the cabinet by the length of the cabinet. Then, multiply the result by two. This is the combined area of the floor and ceiling of the cabinet.
2. Multiply the width of the cabinet by the height of the cabinet. Then, multiply the result by two. This is combined area of the ends of the cabinet.
3. Multiply the length of the cabinet by the height of the cabinet. Then, multiply the result by two. This is the combined area of the sides of the cabinet.
4. Add these three values to determine the total external area of the cabinet.

Pro Tip

Calculating Cabinet Area

Most companies compute total area based on the outside of the cabinet. The exterior is easier to measure and the results are on the safe side.

Copyright Goodheart-Willcox Co., Inc.

Calculating Heat Leakage Load

After computing the area of the cabinet's exterior, subtract the window area to obtain the area of the insulated surface. Window areas are calculated from the measurements of the outside edges of the window frame. Since the heat transfer rate through a window is different than the heat transfer rate through the insulated walls, each type of surface must be considered separately. To find the area of the cabinet's insulated walls, subtract the window area from the total area of the cabinet's exterior.

Technicians can use a table like the one shown in **Figure 50-5** to find the amount of heat leakage per 24-hour period through a square foot of a given material at a given temperature difference. Consider a wall made of steel paneling on both sides with a 4″ core of extruded polystyrene insulation in between. The table in **Figure 50-5** reveals that, at a temperature difference of 60°F (95°F – 35°F), 49.8 Btu will leak through every square foot during a 24-hour period.

The glass leakage rates listed at the bottom of the table show how much heat will leak through one square foot of glass in a 24-hour period for a given temperature difference. If the cabinet has double-pane glass, 660 Btu will leak through each square foot of glass when the temperature difference is 60°F. This rate is then multiplied by the surface area of the glass to determine the total amount of heat leakage through the glass.

Next, the heat leakage through the insulated portion of the cabinet is added to the heat leakage through the glass. The sum of the two equals the total heat leakage into the cabinet.

Example:

The walk-in cooler shown in **Figure 50-6** is 10′ × 9′ × 8′ high. It has two double-pane glass windows measuring 1 1/2′ × 2′. The box is kept at 35°F in a room with a summer design temperature of 95°F. The cabinet's wall construction consists of 4″ extruded polystyrene with metal on each side. The windows are double-pane construction. The temperature difference is 95°F – 35°F = 60°F.

Solution:

Total area:

10′ × 9′ × 2 = 180 ft² (ceiling and floor)
9′ × 8′ × 2 = 144 ft² (ends)
10′ × 8′ × 2 = 160 ft² (sides)
Total area = 484 ft²

Area of windows:

1 1/2′ × 2′ × 2 = 6 ft² of window

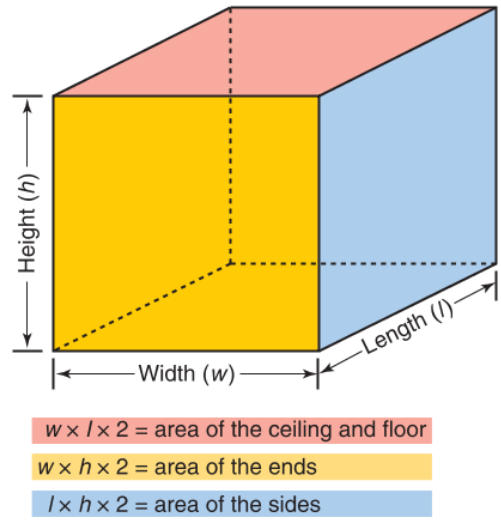

Goodheart-Willcox Publisher

Figure 50-4. The area of each surface of the cabinet is calculated by multiplying the two dimensions that define the edges of that surface.

Area of insulated walls:

484 ft² – 6 ft² = 478 ft² of insulated wall

Figure 50-5 shows that 4″ thick extruded polystyrene insulation and a 60°F temperature difference will result in a transfer of 49.8 Btu of heat through each square foot of insulated wall during a 24-hour period. Multiplying this heat transfer rate by the square footage of the insulated walls calculates the total heat transferred through the walls in 24 hours:

49.8 Btu/24 hr·ft² × 478 ft² = 23,804 Btu/24 hr through the walls

Figure 50-5 also shows that 1 ft² of double-pane glass allows heat transfer of 660 Btu/24 hr when there is a 60°F temperature difference. The heat leakage rate is multiplied by the total surface area of the windows:

660 Btu/24 hr·ft² × 6 ft² = 3960 Btu/24 hr through the windows

To calculate the total heat leakage for the cabinet, the heat leakages through the insulated walls and through the glass are added together. The sum is the total amount of heat that leaks into the cabinet over a 24-hour period when there is a 60°F temperature difference between the inside and outside of the cabinet:

$$\begin{array}{r} 23{,}804 \text{ Btu/24 hr} \\ +\quad 3960 \text{ Btu/24 hr} \\ \hline 27{,}764 \text{ Btu/24 hr} \end{array}$$

Copyright Goodheart-Willcox Co., Inc.

Heat Gain Factors—Walls, Floor, and Ceiling (Btu per ft² per day)																		
Insulation	Temperature Difference (ambient temp. minus storage temp.), °F																	
Extruded Polystyrene K = .139	1	40	45	50	55	60	65	70	75	80	85	90	95	100	105	110	115	120
3″	1.11	44.5	49.5	55.0	60.5	66.0	71.5	77.0	82.5	88.0	93.5	99.0	104.5	110.0	115.5	121.0	126.5	132.0
4″	.83	33.2	37.4	41.5	45.7	49.8	54.0	58.1	62.3	66.4	70.6	74.7	78.9	83.0	87.2	91.3	95.5	99.6
5″	.67	26.8	30.2	33.5	36.9	40.2	43.6	46.9	50.3	53.6	57.0	60.3	63.7	67.0	70.4	73.7	77.1	80.4
6″	.56	22.4	25.2	28.0	30.8	33.6	36.4	39.2	42.0	44.8	47.6	50.4	53.2	56.0	58.8	61.6	64.4	67.2
7″	.48	19.2	21.6	24.0	26.4	28.8	31.2	33.6	36.0	38.4	40.8	43.2	45.6	48.0	50.4	52.8	55.2	57.6
8″	.42	16.8	18.9	21.0	23.1	25.2	27.3	29.4	31.5	33.6	35.7	37.8	39.9	42.0	44.1	46.2	48.3	50.4
9″	.37	14.8	16.7	18.5	20.4	22.2	24.1	25.9	27.8	29.6	31.5	33.3	35.2	37.0	38.9	40.7	42.6	44.4
10″	.33	13.2	14.9	16.5	18.2	19.8	21.5	23.1	24.8	26.4	28.1	29.7	31.4	33.0	34.7	36.3	37.8	39.6
11″	.30	12.0	13.5	15.0	16.5	18.0	19.5	21.0	22.5	24.0	25.5	27.0	28.5	30.0	31.5	33.0	34.5	36.0
12″	.28	11.2	12.6	14.0	15.4	16.8	18.2	19.6	21.0	22.4	23.8	25.2	26.6	28.0	29.4	30.8	32.2	33.6
Single-pane glass	27.0	1080	1220	1350	1490	1620	1760	1890	2030	2160	2290	2440	2560	2700	2840	2970	3100	3240
Double-pane glass	11.0	440	500	550	610	660	715	770	825	880	936	990	1050	1100	1160	1210	1270	1320
Triple-pane glass	7.0	280	320	350	390	420	454	490	525	560	595	630	665	700	740	770	810	840

Goodheart-Willcox Publisher

Figure 50-5. Heat gain factors for walls, floor, and ceiling.

Copyright Goodheart-Willcox Co., Inc.

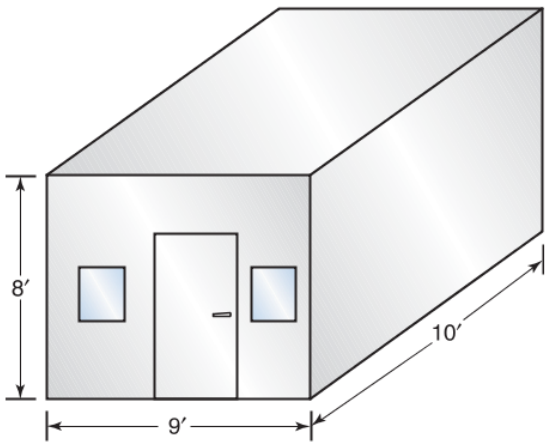

Goodheart-Willcox Publisher

Figure 50-6. Sample walk-in cooler dimensions.

Pro Tip

Determining Cabinet Surface Area and Volume

Rather than manually calculating the exterior surface area and interior volume of cabinets, technicians can refer to a table like the one shown in **Figure 50-7**. This table lists the exterior surface area for cabinets with different dimensions. It also lists the interior volume of different size cabinets based on exterior dimensions, wall thickness, and ceiling height.

Code Alert

Federal Requirements for Walk-In Coolers and Freezers

The *Energy Independence and Security Act of 2007* requires all walk-in coolers manufactured after January 1, 2009 to have wall, ceiling, and door insulation of at least R-25. Walk-in freezers must have wall, door, and ceiling insulation of at least R-32 and floor insulation of at least R-28. The requirement does not apply to windows, glass display doors, or structural members.

Adjusting for Heat from the Sun

If part or all of the cabinet is exposed to direct sunlight, adjustments must be made to account for the solar heat load. If the cabinet is in direct sunlight and has a dark surface, add 10°F (6°C) to the ambient temperature when calculating the heat leakage load. If the cabinet is in direct sunlight and has a medium-colored surface, add 5°F (3°C) to the ambient air temperature. If the cabinet is in direct sunlight and has a light surface, add 3°F (2°C) to the ambient air temperature.

50.1.2 Service Heat Load

The service heat load, sometimes called the *usage heat load*, is the sum of the various heat loads that result from operation of the unit for a given period of time, usually 24 hours. The following are a few of the individual heat loads that typically contribute to the service heat load:

- Cooling the contents to cabinet temperature.
- Cooling of air changes.
- Removing respiration heat from fresh vegetables and meat.
- Removing the heat generated by electric lights and motors.
- Removing the heat given off by people entering or working in the cabinet.

To accurately calculate a service heat load, a technician must consider all potential heat load sources and perform the required calculations with care. The technician must know the amount of food put into the conditioned space, how many times the door is opened, the number of people working in the cabinet, the amount of time they spend in the cabinet, and the type of work they are performing.

Using Tables to Calculate Service Heat Load

Refrigeration equipment manufacturers have developed tables that help technicians estimate service heat loads accurately and more easily. In these tables, a cabinet is classified according to how it will be used. Some tables list specific classifications, such as florist's cabinets, grocery boxes, normal market coolers, fresh meat cabinets, and restaurant short-order cabinets. Other tables have more general classifications, such as average service, heavy service, and long storage. From experience, the manufacturers have found that cabinets used for the same general type of service will have roughly equivalent service heat loads when all other factors are equal.

The service heat load is affected by four basic factors:

- Temperature difference between the exterior and interior of the cabinet.
- Volume of the cabinet's interior.
- How the cabinet is used.
- Length of time for which the heat load is calculated.

Copyright Goodheart-Willcox Co., Inc.

Cabinet Areas, Volumes, and Thickness of Insulation																
		Volume of Interior with 8 ft Ceiling (ft^3)								Volume of Interior with 10 ft Ceiling (ft^3)						
		Wall Thickness								Wall Thickness						
Lg. & Wd. (ft)	Outside (ft^2)	4″	4 1/2″	5″	6″	7″	8″	10″	Outside (ft^2)	4″	4 1/2″	5″	6″	7″	8″	10″
5×5	210	137	131	124	112	101	90	71	250	174	167	159	144	131	117	93
5×6	236	169	161	154	140	127	114	91	280	215	206	197	180	164	148	120
5×7	262	201	194	184	168	153	138	111	310	256	248	236	216	198	179	146
5×8	288	233	224	214	196	179	162	131	340	296	286	274	252	232	210	172
6×6	264	209	201	193	175	160	145	119	312	266	256	247	225	207	188	156
6×7	292	248	238	228	210	193	176	146	344	316	304	292	270	249	228	192
6×8	320	286	277	267	245	226	207	173	376	364	353	342	315	292	269	228
6×9	348	325	315	305	280	259	238	200	408	414	402	390	360	335	309	263
6×10	376	364	353	343	315	292	269	227	440	463	451	439	405	378	350	299
6×12	432	444	432	419	385	358	331	281	504	555	546	536	495	463	430	370
7×7	322	294	283	272	254	234	214	180	378	374	361	348	326	302	278	237
7×8	352	341	329	317	294	273	252	214	412	434	420	406	378	353	328	281
7×9	382	386	374	362	334	312	290	248	446	492	477	463	430	403	377	326
7×10	412	433	420	407	374	346	318	282	480	551	536	521	481	448	413	371
7×12	472	527	512	497	454	414	374	348	548	670	653	635	583	535	486	458
8×8	384	394	382	369	343	320	296	253	448	501	487	473	441	413	385	333
8×9	416	448	434	420	392	367	341	294	484	570	553	538	504	474	443	386
8×10	448	503	587	471	441	413	385	335	520	641	748	603	567	534	500	441
8×12	512	610	591	573	539	506	473	417	592	776	755	734	692	653	615	548
8×14	576	718	697	675	637	594	561	499	664	914	889	864	818	768	730	656
9×9	450	510	489	469	448	420	392	341	522	649	623	600	576	543	510	449
9×10	484	570	554	537	504	473	443	386	560	725	706	686	647	612	575	508
9×12	552	694	674	654	616	581	545	476	636	883	859	836	792	752	708	626
9×14	620	814	793	771	728	687	647	566	712	1035	1011	987	935	888	840	745
10×10	520	638	620	602	567	534	500	440	600	870	790	770	729	680	650	579
10×12	592	776	755	734	693	655	617	547	680	988	962	939	890	847	802	720
10×14	664	912	889	866	818	775	733	654	760	1158	1132	1110	1050	1005	954	860
12×12	672	946	919	893	848	804	760	680	768	1203	1172	1144	1090	1038	988	895
12×14	752	1110	1086	1052	1001	951	900	809	856	1411	1382	1348	1289	1230	1170	1060
14×14	840	1304	1269	1235	1180	1126	1072	968	952	1660	1619	1568	1518	1458	1394	1272

Goodheart-Willcox Publisher

Figure 50-7. This table can be used to determine the exterior surface area and interior volume of cabinets with different footprints, wall thicknesses, and ceiling heights.

Copyright Goodheart-Willcox Co., Inc.

Using Tables to Determine Service Heat Load

To determine the service heat load, a technician would look up vital information in a variety of tables. The following is the general procedure a technician would use to calculate service heat loads using tables:

1. Determine the type of service for which the cabinet is being used, such as average, heavy, or long storage. The type of use has a greater effect on the service heat loads of smaller cabinets than it does on the service heat loads of larger ones.
2. Find the volume of the cabinet using the cabinet's inside dimensions. Refer to the "Volume of Interior" columns in **Figure 50-7**.
3. After the total volume of the cabinet has been found, determine the usage heat gain per cubic foot of cabinet space using a table like the one in **Figure 50-8**. When looking up the usage heat gain, use the same temperature difference that was used to calculate heat leakage into the cabinet.
4. Multiply the volume of the cabinet's interior by the usage heat gain. The result is the estimated service heat load.

Example:

Use tables to find the estimated service heat load for a 9′ × 10′ × 8′ cabinet with 4″ thick walls. The cabinet will be subjected to average service. Use a temperature difference of 60°F (33°C) for the calculations.

Solution:

The volume of the cabinet is looked up in the table in **Figure 50-7** and found to be 570 ft^3 (approximately 600 ft^3). Next, the usage heat gain is looked up on the table in **Figure 50-8**. Since 570 ft^3 is not listed on the table, the usage heat gain for a 570 ft^3 must be estimated using the two closest values. The difference between the usage heat gain for a 500 ft^3 cabinet and a 600 ft^3 cabinet is 2.6 Btu/24 hr. Since the 570 ft^3 cabinet is 30 ft^3 smaller than the 600 ft^3 cabinet and 70 ft^3 larger than the 500 ft^3 cabinet, the difference between the service loads for the 500 ft^3 cabinet and the 600 ft^3 cabinet is multiplied by 30% and added to the usage heat gain for the 600 ft^3 cabinet:

Usage heat gain for 600 ft^3 cabinet = 70 Btu/24 hr·ft^3
Usage heat gain for 500 ft^3 cabinet = 72.6 Btu/24 hr·ft^3
Difference in cabinet volumes = 100 ft^3
Difference in usage heat gain = 2.6 Btu/24 hr·ft^3

Usage heat gain for 570 ft^3 cabinet
= 70 Btu/24 hr·ft^3
+ (0.30 × 2.6 Btu/24 hr·ft^3)
= 70.8 Btu/24 hr·ft^3

Multiply this value by the total volume in cubic feet to calculate an accurate estimate of the cabinet's service heat load:

Service heat load = usage heat gain per cubic foot × volume.
= 70.8 Btu/24 hr·ft^3 × 570 ft^3
= 40,356 Btu/24 hr

Manually Calculating Service Load

The preceding section explained how to use tables to quickly estimate the service load for a cabinet with a fair amount of accuracy. Occasionally, a technician may need to manually calculate the service load for a commercial refrigeration system. The total service load includes the air change heat load, the product heat load, and miscellaneous heat loads. The following sections explain how those individual heat loads are determined and then added together to calculate the service heat load.

Calculating Cabinet Volume

The first step in manually calculating a service heat load is to determine the cabinet volume. Cabinet volume is based on the inside dimensions of the cabinet. For standard size cabinets, the volume can be looked up in a table like the one shown in **Figure 50-7**. If a table is not available, the volume of the cabinet can be calculated manually.

The volume of the cabinet interior is calculated using the exterior dimensions minus the wall thickness, as shown in **Figure 50-9**. This volume is used to calculate the number of air changes that the cabinet is likely to undergo in a day. The volume of a rectangular box or a cube is found simply by multiplying the length of the box by the width of the box and the height of the box.

Formula for Calculating the Volume of Rectangular Boxes:

$$V = l \times w \times h$$

Example:

In the sample cabinet, which is 10′ long × 9′ wide × 8′ high, the walls are 4″ thick. Find the volume of the cabinet.

Solution:

Inside dimension = outside dimension – (wall thickness × 2)
Inside length = 10′ – 8″ = 9′-4″ or 9 1/3′

Copyright Goodheart-Willcox Co., Inc.

Usage Heat Gain, Btu/24 hr for 1 ft³ Interior												
Volume (ft³)	Service*	Temperature Difference, °F (ambient temp. minus storage room temp.)										
		1	40	50	55	60	65	70	75	80	90	100
20	Average	4.68	187	234	258	281	305	328	351	374	421	468
	Heavy	5.51	220	276	303	331	358	386	413	441	496	551
30	Average	3.30	132	165	182	198	215	231	248	264	297	330
	Heavy	4.56	182	228	251	274	297	319	342	365	410	456
50	Average	2.28	91	114	126	137	148	160	171	182	205	228
	Heavy	3.55	142	177	196	213	231	249	267	284	320	355
75	Average	1.85	74	93	102	111	120	130	139	148	167	185
	Heavy	2.88	115	144	158	173	188	202	216	230	259	288
100	Average	1.61	64	81	84	97	105	113	121	129	145	161
	Heavy	2.52	101	126	139	151	164	176	189	202	227	252
200	Average	1.38	55	69	76	83	90	97	103	110	124	138
	Heavy	2.22	90	111	122	133	144	155	166	178	200	222
300	Average	1.30	52.0	65.0	71.5	78.0	84.5	91.0	97.5	104.0	117	130
	Heavy	2.08	83.2	104.0	114.0	125.0	135.0	146.0	156.0	166.0	187	208
400	Average	1.24	49.6	62.0	68.2	74.4	80.6	86.8	93.0	99.2	112	124
	Heavy	1.96	78.4	98.0	108.0	118.0	128.0	137.0	147.0	157.0	176	196
500	Average	1.21	48.4	60.5	66.6	72.6	78.7	84.7	90.7	96.8	109	121
	Heavy	1.87	74.8	93.5	103.0	112.0	122.0	131.0	140.0	150.0	168	187
600	Average	1.17	46.8	58.5	64.0	70.0	76.0	82.0	88.0	94.0	105	117
	Heavy	1.85	74.0	92.5	102.0	111.0	120.0	130.0	139.0	148.0	167	185
800	Average	1.11	44.4	55.5	61.1	66.6	72.2	77.7	83.3	88.8	100	111
	Heavy	1.76	70.4	88.0	96.8	106.0	115.0	123.0	132.0	141.0	158	176
1,000	Average	1.10	44.0	55.0	60.5	66.0	71.5	77.0	82.5	88.0	99	110
	Heavy	1.67	66.8	83.5	91.9	100.0	108.0	117.0	125.0	134.0	150	167
1,200	Average	0.995	39.8	49.8	54.7	59.7	64.7	69.7	74.7	79.6	89.6	99.5
	Heavy	1.580	63.2	79.0	86.9	94.8	103.0	111.0	119.0	126.0	142.0	158.0
1,500	Average	0.920	36.8	46.0	50.6	55.2	59.8	64.4	69.0	73.6	82.8	92.0
	Heavy	1.500	60.0	75.0	82.5	90.0	97.5	105.0	113.0	120.0	135.0	150.0
2,000	Average	0.835	33.4	41.8	45.9	50.1	54.3	58.5	62.7	66.8	75.2	83.5
	Long storage	0.775	31.0	38.8	42.6	46.5	50.4	54.3	58.1	62.0	69.8	77.5
3,000	Average	0.750	30.0	37.5	41.3	45.0	48.8	52.5	56.2	60.0	67.5	75.0
	Long storage	0.576	23.0	28.8	31.7	34.6	37.3	40.3	43.2	46.1	51.8	57.6
5,000	Long storage	0.403	16.1	20.2	22.2	24.2	26.2	28.2	30.2	32.2	36.3	40.3

Goodheart-Willcox Publisher

Figure 50-8. A table like this one can be used to determine usage heat gain. It provides different values for the different types of storage the cabinet may be used for: average storage, heavy storage, and long storage. (*continued*)

Copyright Goodheart-Willcox Co., Inc.

Usage Heat Gain, Btu/24 hr for 1 ft³ Interior												
Volume (ft³)	Service*	Temperature Difference, °F (ambient temp. minus storage room temp.)										
		1	40	50	55	60	65	70	75	80	90	100
7,500	Long storage	0.305	12.2	15.3	16.8	18.3	19.8	21.4	22.9	24.4	27.5	30.5
10,000	Long storage	0.240	9.6	12.0	13.2	14.4	15.6	16.8	18.0	19.2	21.6	24.0
20,000	Long storage	0.187	7.48	9.35	10.30	11.2	12.2	13.1	14.0	15.0	16.8	18.7
50,000	Long storage	0.178	7.12	8.90	9.79	10.7	11.6	12.5	13.4	14.2	16.0	17.8

*For average and heavy service, product load is based on product entering at 10°F above the refrigerator temperature. For long storage, the entering temperature is approximately equal to the refrigerator temperature. Where the product load is unusual, do not use this table.

Goodheart-Willcox Publisher

Figure 50-8. Continued.

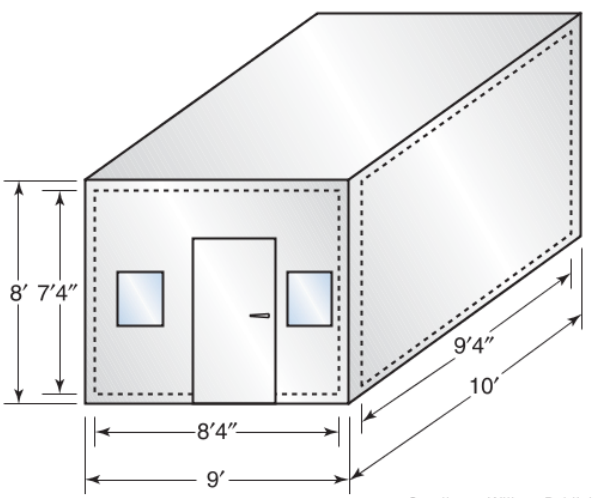

Goodheart-Willcox Publisher

Figure 50-9. To calculate the volume of a cabinet, the interior dimensions of the refrigerated space are multiplied together. Typically, an interior dimension is equal to the corresponding exterior dimension minus two times the thickness of the walls.

Inside width = 9′ – 8″ = 8′-4″ or 8 1/3′
Inside height = 8′ – 8″ = 7′-4″ or 7 1/3′
Inside volume = 9 1/3′ × 8 1/3′ × 7 1/3′
= 28/3′ × 25/3′ × 22/3′
= 15400/27 ft³
= 570.4 ft³

Air Change Heat Load

Each time a service door or a walk-in door is opened, the cold air inside the refrigerated space, being heavier, spills out through the bottom of the opening. This allows the warmer room air to move into the refrigerated space. This air movement is sometimes called *infiltration*.

The air that enters a refrigerated space must be cooled. According to Charles' law, the air entering the cabinet is reduced in pressure as it cools. This creates a pressure difference between the outside of the cabinet and the inside. If the cabinet is not airtight, air will continue to leak in due to the pressure difference. This infiltration of warm air continues until the pressure inside the cabinet equalizes with pressure outside the cabinet.

Figure 50-10 lists the approximate number of air changes that can be expected to occur in cabinets of various volumes. **Figure 50-11** shows the rate at which heat (sensible heat + latent heat) must be removed from infiltrating air in order to cool it to the same temperature as the refrigerated space. The amount of heat that must be removed depends on outside conditions and refrigerator temperatures. To calculate the total heat load due to air changes, the required heat removal rate must be multiplied by the number of air changes, and the volume of the cabinet, in cubic feet.

Formula:
Air change heat load = heat removal rate × volume of cabinet × number of air changes

Product Heat Load

Any substance that is warmer than its surroundings will lose heat. This will continue until the substance cools to the ambient temperature. ***Product heat load***

14

Copyright Goodheart-Willcox Co., Inc.

Air Changes by Volume			
Volume (ft^3)	Air Changes per 24 hr	Volume (ft^3)	Air Changes per 24 hr
200	44.0	6,000	6.5
300	34.5	8,000	5.5
400	29.5	10,000	4.9
500	26.0	15,000	3.9
600	23.0	20,000	3.5
800	20.0	25,000	3.0
1,000	17.5	30,000	2.7
1,500	14.0	40,000	2.3
2,000	12.0	50,000	2.0
3,000	9.5	75,000	1.6
4,000	8.2	100,000	1.4
5,000	7.2		

Note: For heavy usage, multiply the above values by 2. For long storage, multiply the above values by 0.6.

Reprinted by permission of the American Society of Heating, Refrigerating, and Air-Conditioning Engineers, Atlanta, Georgia

Figure 50-10. Table listing the average number of storage room air changes per 24 hours. The values listed are based on volume and take into account door openings and air filtration.

refers to the heat contained in products that are placed in a refrigerated space. Some of the product's heat must be removed in order to cool the product to the desired temperature. This heat is transferred to the air surrounding the product. If this heat is not transferred outside of the cabinet by the refrigeration system, the temperature inside the cabinet will gradually rise.

When product heat loads are being discussed, three different types of heat must be considered: sensible heat, latent heat, and respiration heat.

Sensible Heat

Sensible heat is heat that results in a temperature change in the product. To lower the temperature of the product, sensible heat must be transferred to the air surrounding the product and rejected from the cabinet by the refrigeration system.

To calculate the amount of sensible heat that must be removed to bring the product down to cabinet temperature, the weight of the product is multiplied by the specific heat capacity of the product and the temperature difference between the product temperature and the cabinet temperature. The *specific heat capacity* of a substance is the amount of heat needed to raise the temperature of one pound of that substance by 1°F. The specific heat of various products can be looked up on a table like the one shown in **Figure 50-12**.

Formula for Sensible Heat Load:

$$Q = W \times sp\ ht \times (T_1 - T_2)$$

where

Q = sensible heat to be removed
W = weight of the product
$sp\ ht$ = specific heat capacity of the product
T_1 = temperature of the product
T_2 = cabinet temperature

When a material changes its physical state (such as changing from liquid to solid, solid to gas, or vice-versa) the specific heat of the material also changes. It is important to use the correct specific heat in the load calculations.

If the product is going to be cooled below its freezing point, two separate sensible heat calculations are performed. The first calculation determines the sensible heat that must be removed to cool the product from its initial temperature to its freezing point. This calculation requires the technician to use the specific heat value for above-freezing temperatures. The second calculation determines how much sensible heat must be removed after the product is frozen to cool it to its final temperature. For this calculation, the below-freezing specific heat value is used.

Pro Tip

Specific Heat of Vapors

Every substance has four different values for its specific heat, one value for the solid state, one for the liquid state, and two for the vapor state. The following are the two different values for specific heat of a vapor:

- Specific heat when under a *constant pressure.*
- Specific heat when confined to a *constant volume.*

A vapor under constant pressure has a greater specific heat value than the same vapor under constant volume. The vapor heated with a constant pressure upon it will expand and do external work, such as increasing the size of a balloon. This external work naturally requires an additional quantity of heat.

Latent Heat

Latent heat is the heat that results in a phase change in the product. For example, if a bowl of soup is put in a freezer, sensible heat is removed to bring the soup down to its freezing temperature, and then latent heat must be transferred out of the soup to freeze it solid. If the soup were steaming when it was put into the freezer, additional latent heat would need to be removed from the steam in order to condense it.

Copyright Goodheart-Willcox Co., Inc.

Heat Removed from Replacement Air to Reach Cabinet Temperature (Btu/ft³)								
Storage Room Temp. °F @ 80% RH	Temperature of Outside Air							
	85°F		90°F		95°F		100°F	
	Relative Humidity							
	50%	60%	50%	60%	50%	60%	50%	60%
65	0.45	0.64	0.68	0.91	0.93	1.20	1.21	1.51
60	0.66	0.85	0.89	1.12	1.14	1.41	1.42	1.71
55	0.85	1.04	1.08	1.31	1.33	1.60	1.61	1.91
50	1.03	1.22	1.26	1.49	1.51	1.78	1.79	2.09
45	1.19	1.39	1.43	1.66	1.68	1.94	1.95	2.25
40	1.35	1.55	1.59	1.81	1.83	2.10	2.11	2.41
35	1.50	1.70	1.74	1.96	1.99	2.25	2.26	2.56
30	1.64	1.84	1.88	2.10	2.13	2.39	2.40	2.70

Storage Room Temp. °F @ 80% RH	Temperature of Outside Air							
	40°F		50°F		90°F		100°F	
	Relative Humidity							
	70%	80%	70%	80%	50%	60%	50%	60%
25	0.39	0.43	0.69	0.75	2.02	2.24	2.54	2.84
20	0.52	0.56	0.82	0.89	2.15	2.38	2.68	2.97
15	0.65	0.69	0.95	1.01	2.28	2.50	2.80	3.10
10	0.77	0.82	1.08	1.14	2.40	2.63	2.93	3.22
5	0.89	0.94	1.20	1.26	2.52	2.75	3.05	3.34
0	1.01	1.05	1.31	1.38	2.64	2.86	3.16	3.46
–5	1.13	1.17	1.43	1.49	2.76	2.98	3.28	3.58
–10	1.24	1.29	1.55	1.61	2.88	3.10	3.40	3.70
–15	1.36	1.41	1.67	1.73	2.99	3.22	3.52	3.81
–20	1.48	1.52	1.78	1.85	3.11	3.34	3.64	3.93
–25	1.60	1.64	1.90	1.97	3.23	3.45	3.75	4.05
–30	1.72	1.76	2.03	2.09	3.35	3.58	3.88	4.17

Reprinted by permission of the American Society of Heating, Refrigerating, and Air-Conditioning Engineers, Atlanta, Georgia

Figure 50-11. Table listing the heat that must be removed, per cubic foot, to cool replacement air to cabinet temperature. The values are given in Btu/ft³.

To calculate the latent heat that must be removed from a product in order to freeze it, multiply the weight of the product by its latent heat of fusion. The latent heat of fusion of most food products is equal to the percentage of water in the food times the latent heat of fusion for water, which is 144 Btu/lb. The latent heat of fusion for various products can be looked up in a table like the one shown in **Figure 50-12**.

Formula for Latent Heat Load

$$Q = W \times L_f$$

where

Q = total heat released during freezing
W = weight of the product
L_f = the product's latent heat of fusion

14

Copyright Goodheart-Willcox Co., Inc.

Heat Load of Various Refrigerated Products									
Product	Quick Freeze Temp. (°F)	Storage Temp. (°F)		Relative Humidity (%)	Specific Heat (Btu/lb · °F)		Latent Heat (Btu/lb)	Freezing Point (°F)	Respiration (Btu/lb per day)
		Long	Short		Above Freezing	Below Freezing			
Apples	–15	30–32	38–42	85–88	0.92	0.39	92	28.4	0.75
Asparagus	–30	32	40	85–90	0.95	0.44	134	29.8	.....
Bacon, Fresh		0–5	36–40	80	0.55	0.31	30	25.0	.....
Bananas		56–72	56–72	85–95	0.81	.....	108	30.2	4.18
Beans, Green		32–34	40–45	85–90	0.92	0.47	128	29.7	3.30
Beans, Dried		36–40	50–60	70	0.30	0.24	18	.....	.....
Beef, Fresh, Fat	–15	30–32	38–42	84	0.60	0.35	79	.....	.....
Beef, Fresh, Lean	–15	30–32	38–42	85	0.77	0.40	100	.....	.....
Beets, Topped		32–35	45–50	95–98	0.90	.....	.....	26.9	2.00
Blackberries	–15	31–32	42–45	80–85	0.89	0.46	125	28.9	.....
Broccoli		32–35	40–45	90–95	0.93	.....	.....	29.2	.....
Butter	+15	.....	40–45	.....	0.64	0.34	15	15.0	.....
Cabbage	–30	32	45	90–95	0.93	0.47	130	31.2	.....
Carrots, Topped	–30	32	40–45	95–98	0.87	0.45	120	29.6	1.73
Cauliflower		32	40–45	85–90	0.90	.....	.....	30.1	.....
Celery	–30	31–32	45–50	90–95	0.95	0.48	135	29.7	2.27
Cheese	+15	32–38	39–45	.....	0.70	.....	.....	.....	.....
Cherries		31–32	40	80–85	0.85	.....	118	28.0	6.60
Chocolate Coatings		45–50	.....	.....	0.3	.....	.....	.....	.....
Corn, Green		31–32	45	85–90	0.86	.....	.....	29.0	4.10
Cranberries		36–40	40–45	85–90	0.91	.....	.....	27.3	.....
Cream		34	40–45	.....	0.88	0.37	84	.....	.....
Cucumbers		45–50	45–50	80–85	0.93	.....	.....	30.5	.....
Dates, Cured		28	55–60	50–60	0.83	0.44	104	.....	.....
Eggs, Fresh	–10	30–31	38–45	.....	0.76	0.40	98	31.0	.....
Eggplants		45–50	46–50	85–90	0.88	.....	.....	30.4	.....
Flowers		35–40	.....	85–90	.....	.....	.....	.....	.....
Fish, Fresh, Iced	–15	25	25–30	.....	0.82	0.41	105	30.0	.....
Fish, Dried		30–40	.....	60–70	0.56	0.34	65	.....	.....
Furs		32–34	40–42	40–60	.....	.....	.....	.....	.....
Furs, To Shock		15	15						
Grapefruit		32	32	85–90	0.92	.....	111	28.4	0.50
Grapes		30–32	35–40	80–85	0.92	.....	111	27.0	0.50
Ham, Fresh		28	36–40	80	0.68	0.38	87	.....	.....
Honey		31–32	45–50	.....	0.35	0.26	26	.....	.....
Ice Cream	–20	.....	0–10	.....	.50–.80	0.45	96	.....	.....

Dunham-Bush, Inc.

Figure 50-12. Table listing the temperature, specific heat, and latent heat data for some common foods. These values can be used in heat loads calculations. (*continued*)

Copyright Goodheart-Willcox Co., Inc.

Heat Load of Various Refrigerated Products									
Product	Quick Freeze Temp. (°F)	Storage Temp. (°F)		Relative Humidity (%)	Specific Heat (Btu/lb · °F)		Latent Heat (Btu/lb)	Freezing Point (°F)	Respiration (Btu/lb per day)
		Long	Short		Above Freezing	Below Freezing			
Lard		32–34	40–45	80	0.52	0.31	90	.....	.....
Lemons		55–58	.....	80–85	0.91	0.39	190	28.1	0.40
Lettuce		32	45	90–95	0.90	.....	.....	31.2	8.00
Liver, Fresh		32–34	36–38	83	0.72	0.42	94	.....	.....
Lobster, Boiled		25	36–40	.....	0.81	0.42	105	.....	.....
Maple Syrup		31–32	45	.....	0.24	0.22	7	.....	.....
Meat, Brined		31–32	40–45	.....	0.75	0.36	75	.....	.....
Melons		34–40	40–45	75–85	0.92	0.35	115	28.5	1.00
Milk		34–36	40–45	.....	0.92	0.46	124	31.0	.....
Mushrooms		32–35	55–60	80–85	0.90	.....	.....	30.2	.....
Nut Meats		32–50	35–40	65–75	0.30	0.24	14	20.0	.....
Onions		32	50–60	70–75	0.91	0.46	120	30.1	1.00
Oranges		32–34	50	85–90	0.89	0.40	91	27.9	0.70
Oysters		.....	32–35	.....	0.85	0.45	120	.....	.....
Parsnips	–30	32–34	34–40	90–95	0.82	0.45	120	28.9	.....
Peaches, Fresh		31–32	50	85–90	0.92	0.42	110	29.4	1.00
Pears, Fresh		29–31	40	85–90	0.90	0.43	106	28.0	6.60
Peas, Green		32	40–45	85–90	0.80	0.42	108	30.0	.....
Peas, Dried		35–40	50–60	.....	0.28	0.22	14	.....	.....
Peppers		32	40–45	85–90	0.90	.....	.....	30.1	2.35
Pineapples, Ripe		40–45	50	85–90	0.90	.....	127	29.9	.....
Plums		31–32	40–45	80–85	0.83	.....	115	28.0	.....
Pork, Fresh		30	36–40	85	0.60	0.38	66	28.0	.....
Potatoes, White	–30	36–50	45–60	85–90	0.77	0.44	105	28.9	0.85
Poultry, Dressed	–10	28–30	29–32	.....	0.80	0.41	99	27.0	.....
Pumpkins		50–55	55–60	70–75	0.90	.....	.....	30.2	.....
Raspberries		31–32	40–45	80–85	0.89	0.46	125	30.0	3.30
Sausage, Fresh		31–36	36–40	80	0.89	.....	.....	.....	.....
Sauerkraut		33–36	36–38	85	0.91	0.47	128	.....	.....
Squash		50–55	55–60	70–75	0.90	.....	.....	29.3	.....
Spinach		32	45–50	85	0.92	.....	.....	30.8	.....
Strawberries	–15	31–32	42–45	80–85	0.92	0.48	129	30.0	3.30
Tomatoes, Ripe		40–50	55–70	85–90	0.95	.....	135	30.4	0.50
Veal	–15	28–30	36–40	.....	0.71	0.39	91	29.0	.....

Dunham-Bush, Inc. 14

Figure 50-12. Continued.

Copyright Goodheart-Willcox Co., Inc.

Respiration Heat

When fruits and vegetables are put into cold storage, their biological processes continue. As produce ripens and ages, it absorbs oxygen and releases carbon dioxide, ethylene gas, and heat. This heat is called ***respiration heat*** and must be removed by the refrigeration system to prevent the cabinet from warming. The respiration heat of various products can be looked up on a table similar to the one shown in **Figure 50-12**.

Total Product Heat Load

The total product heat load is the sum of the sensible heat loads, latent heat loads, and respiration heat loads for every item in a refrigerated space. **Figure 50-12** shows the specific heat and latent heat of various refrigerated products. In addition, it recommends temperatures and relative humidity for storing various items.

Miscellaneous Heat Load

All sources of heat not covered by heat leakage, product cooling, and respiration heat loads are usually categorized as ***miscellaneous heat loads***. Some of the more common miscellaneous heat loads are lights, electric motors, people, and defrosting heat sources.

Heat from Lights

Lights located in the refrigerated space will release heat. Light emitting diodes (LED) and compact fluorescent (CFL) lights use about 1/4 of the energy of traditional incandescent lights and produce much less heat. A typical 100 W incandescent lightbulb can be replaced with a 20 W LED or CFL light and emit the same amount of light, while emitting far less heat. For example, a 100 W lamp will give off 341 Btu in one hour:

$$1 \text{ W} = 3.41 \text{ Btu/hr}$$
$$100 \text{ W} = 341 \text{ Btu/hr}$$

If the same 100 W incandescent light is replaced with a 20 W LED light, it will give off only 68 Btu/hr.

To find the amount of heat released by a light source, multiply the number of Btu released in one hour by the number of hours per day the light is on. For example, if a 100 W incandescent bulb runs continuously, the heat load would be:

$$341 \text{ Btu/hr} \times 24 \text{ hr}/24 \text{ hr} = 8184 \text{ Btu}/24 \text{ hr}$$

If the workday is eight hours (only time light is on), the heat load would be:

$$341 \text{ Btu/hr} \times 8 \text{ hr}/24 \text{ hr} = 2728 \text{ Btu}/24 \text{ hr}$$

Thinking Green

High-Efficiency Lighting

Use of high-efficiency lighting in a walk-in freezer or cooler can improve the overall energy efficiency of a system by as much as 10%.

Heat from Electric Motors

The heat released by any electric motors operating in the conditioned space must also be determined. On the average, electric motors release heat at a rate of approximately 2550 Btu/hp·hr. The exact amount of heat released depends on motor efficiency. The larger the motor, the more efficient it is. **Figure 50-13** shows the heat given off by motors and the devices they drive. Forced-draft evaporators usually have motors and fans. Heat is released at a rate of 4600 Btu/hp·hr for motor sizes ranging from 1/8 hp to 1/3 hp. To calculate the total heat released by a particular motor, the horsepower rating of the motor and the number of hours the motor operates in a 24-hour period are multiplied by the heat release rate. For example, the following calculates the heat released by a continuously operating 1/8 hp fan motor in one day:

Total heat released in 24 hr

$$= \text{heat release rate} \times \text{horsepower of motor} \times \text{hours of operation}$$
$$Q = 4600 \text{ Btu/hp·hr} \times 1/8 \text{ hp} \times 24 \text{ hr}$$
$$= 13{,}800 \text{ Btu}$$

Heat Equivalent of Electric Motors

Motor Size (hp)	Connected Load in Refrigerated Space[a]	Motor Losses Outside Refrigerated Space[b]	Connected Load Outside Refrigerated Space[c]
	Btu/hp·hr	Btu/hp·hr	Btu/hp·hr
1/8 to 1/3	4600	2550	2100
1/2 to 3	3800	2550	1300
5 to 20	3300	2550	800

[a] For use when both useful output and motor losses are dissipated within refrigerated space; motors driving fans for forced circulation unit coolers.

[b] For use when motor losses are dissipated outside refrigerated space and useful motor work is expended within refrigerated space; pump on a circulating brine or chilled water system; fan motor outside refrigerated space driving fan circulating air within refrigerated space.

[c] For use when motor heat losses are dissipated within refrigerated space and useful work expended outside of refrigerated space; motor in refrigerated space driving pump or fan located outside of space.

Reprinted by permission of the American Society of Heating, Refrigerating, and Air-Conditioning Engineers, Atlanta, Georgia, from the 1994 ASHRAE Handbook—Refrigeration

Figure 50-13. Table listing the approximate amount of heat released by operating electric motors. Note the different operating conditions and how they affect the amount of heat released.

Copyright Goodheart-Willcox Co., Inc.

Thinking Green

High-Efficiency Motors

Use of high-efficiency compressors in a walk-in cooler or freezer can increase system efficiency by up to 10%. Use of high-efficiency evaporator fan motors can further improve energy efficiency up to an additional 10%. Use of high-efficiency condenser fan motors can boost energy efficiency another 5%.

Heat from People

People inside a refrigerated space release heat at varying rates. This depends on what they are wearing (insulation), the temperature of the cabinet, and on how hard they are working. **Figure 50-14** shows that occupants add 720 Btu/hr of heat load per person at 50°F (10°C) and 1400 Btu/hr heat load per person at –10°F (–23°C).

To find the heat load resulting from people working in the refrigerated space, use the table to find the heat equivalent of occupancy based on the temperature inside the refrigerated space. Next determine the total number of hours worked. For example, if three people work in a space for four hours and then two people work in the space for an additional two hours, the total number of hours worked would be 16. The next step in determining the heat load from occupants is to multiply the heat equivalent of occupancy by the total number of hours worked. For example, if one person worked in a 30°F (–l°C) refrigerator for eight hours, the heat load would be:

950 Btu/hr × 8 hr = 7600 Btu

Heat Equivalent of Occupancy

Refrigerated Space Temperature (°F)	Heat Equivalent per Person (Btu/hr)
50	720
40	840
30	950
20	1050
10	1200
0	1300
–10	1400

Note: Heat equivalent may be estimated by $q_p = 1295 - 11.5t$ (°F)

Reprinted by permission of the American Society of Heating, Refrigerating, and Air-Conditioning Engineers, Atlanta, Georgia, from the 1993 ASHRAE Handbook—Fundamentals

Figure 50-14. Table indicating the approximate amount of heat released each hour by a person in a refrigerated space, based on the temperature of the space.

Heat from Defrosting Heat Sources

Many refrigerating units have defrosting heat sources, especially if the operating temperature is 32°F (0°C) or lower. Whether the defrost heat source is electric, hot gas, or water, the defrosting operation adds heat to the interior of the refrigerator. The amount of heat is difficult to determine because most of the defrosting heat is removed in the defrost drain water. Add approximately 10% of the defrosting heat input as part of the service heat load.

50.1.3 Calculating the Total Heat Load

Total heat load is the sum of the heat leakage load and all of the individual heat loads that make up the service heat load. The information presented in the previous sections of this chapter can be used to find the total heat load in the following example:

Example:

A metal-sheathed walk-in cabinet is 10′ long × 9′ wide × 8′ high. The wall construction consists of 4″ extruded polystyrene with metal on each side. The cabinet has two double-pane glass windows measuring 1 1/2′ × 2′ each. It is in a room with a temperature of 95°F and a relative humidity of 60%. It cools 2000 lb of fresh lean beef from 60°F to 35°F each day. The evaporator has two 1/8-hp motors and the cabinet has two 40-watt lamps that operate 8 hours each day. One person works in the cabinet 8 hours each day.

Solution, Step 1: Calculate the Heat Leakage Load

The first step in calculating the total heat load is to calculate the total heat leaking through the cabinet. To find this, the surface area of the entire cabinet is calculated. Then, the surface area of the windows is subtracted from the total surface area to determine the surface area of the insulated walls.

Next, the heat leakage rates through the various materials of the cabinet are determined, based on the temperature difference between the inside and outside of the cabinet. The heat leakage rates can be determined using the material's R- or U-values or by looking them up on a table similar to the one shown in **Figure 50-5**.

Next, the heat leakage rate for the insulated walls of the cabinet is multiplied by the surface area of the walls, and the heat leakage rate through the windows is multiplied by the surface area of the windows. Finally, the heat leakage through the walls is added to the heat leakage through the windows. The result is the total heat leakage into the cabinet. The total heat leakage for the cabinet described in the example is 28,063 Btu/24 hr.

Solution, Step 2: Calculating the Air Change Heat Load Portion of the Service Heat Load

The next step in calculating total heat load for the cabinet is to find the heat load that results from air

Copyright Goodheart-Willcox Co., Inc.

changes inside the cabinet. The volume of the cabinet can be calculated manually or can be looked up on a table like the one shown in **Figure 50-7**. The volume of the cabinet in the example is 570 ft^3. The number of air changes, based on the volume of the cabinet, can be looked up on a table like the one shown in **Figure 50-10**. The cabinet in the example will undergo roughly 24 air changes per day. The volume of air exchanged each day equals the volume of the cabinet times the number of air changes per day, or 13,680 ft^3 in the case of the example.

Next, the amount of heat that must be removed in order to cool the replacement air to the cabinet temperature can be calculated manually using the specific heat of air and the latent heat of vaporization of water vapor, or it can be looked up on a table similar to the one shown in **Figure 50-11**. For the cabinet in the example, 2.25 Btu must be removed for every cubic foot of replacement air.

The last step in determining the air change load is to multiply the heat removal rate by the volume of the cabinet. For the cabinet described in the example, this equals 30,780 Btu/24 hr.

Solution, Step 3: Calculating the Product Heat Load Portion of the Service Heat Load

The first step in calculating the product heat load is to determine the amount and weights of products that will be stored in the cabinet. Next, the specific heat of each produce must be looked up on a table like the one shown in **Figure 50-12**. Then, the temperature difference between the inside of the cabinet and the product entering the cabinet is multiplied by the product's specific heat and the weight of the product.

In the case of the 2000 lb of beef in the example, the specific heat is 0.77 Btu/lb and the temperature difference is 25°F. Therefore, the product heat load is 38,500 Btu per day. The beef does not freeze and there is no respiration heat associated with its storage, so no further product heat load calculations are required.

Solution, Step 4: Calculating the Miscellaneous Heat Load Portion of the Service Heat Load

The miscellaneous heat load is the sum of all the heat generated from electric motors, lights, people inside the refrigerated space, and heat added during defrosting cycles. The heat from electric motors can be looked up on a table like the one shown in **Figure 50-13**. The two 1/8 hp motors described in the example produce 27,600 Btu of heat every 24 hours.

To calculate the load from lights inside the refrigerated space, the wattage of each bulb is multiplied by the time of operation and a conversion factor of 3.41 Btu/watt. The two bulbs in the example generate a heat load of 2182 Btu per day.

An estimate of the amount of heat that is added by a person working in the refrigerated space can be looked up in a table like the one shown in **Figure 50-14**. The heat equivalent found on the table is then multiplied by the total number of hours worked by all occupants. The cabinet temperature in the example is 35°F, which is halfway between the 30°F and 40°F values listed on the table. The heat equivalent of occupancy is found by averaging the heat equivalents for 30°F and 40°F, which result in a heat equivalent of 895 Btu/hr. Since the worker is in the cabinet 8 hours a day, the total heat load due to occupants is 7160 Btu per day.

Solution, Step 5: Combining the Various Heat Loads

Once the heat leakage load and all of the individual heat loads that make up the service heat load are calculated, they are added together to find the total heat load. Since the loads are being added together, it is important that each load be expressed in the same terms, typically Btu/24 hr. The following shows how the various heat loads are added to arrive at the total heat load for the cabinet described in the example:

	28,063 Btu/24 hr
	30,780 Btu/24 hr
Total heat load =	38,500 Btu/24 hr
	27,600 Btu/24 hr
	2182 Btu/24 hr
	+ 7160 Btu/24 hr
Total heat load (daily) =	134,285 Btu/24 hr
	or 5,595 Btu/hr

50.1.4 Heat Loads for Water Coolers

So far, the discussion of heat loads has been limited to coolers, walk-in freezers, and similar systems. The same principles can be applied to refrigeration systems that are used to cool water rather than to cool air. Finding the total heat load of a water-cooling system is a combination of a specific heat and a heat leakage problem:

1. Water is cooled to temperatures that vary upward from 35°F. Calculating the amount of heat removed from the water to cool it to a certain temperature is a specific heat–related problem.
2. Because the water in the system is stored at a low temperature, heat from the room leaks into the stored water. The rate of heat leakage in a water cooler is calculated in essentially the same way that heat leakage into a refrigerated cabinet is calculated.

The first step in installing a water cooling system is to determine what the cooling capacity of the system must be in order to effectively and efficiently handle

Copyright Goodheart-Willcox Co., Inc.

the total heat load. As with total heat load for a walk-in cooler, the total heat load for a water cooler is a combination of the heat leakage load and the service heat load.

Calculating the Service Heat Load for a Water Cooler

For a water cooler, the service heat load is simply the heat that must be removed to cool the water. The service heat load that can be expected depends on the way the system will be used. The following are the common variables that will affect the service heat load:

- The rate at which water from the system will be consumed. The rate at which water will be consumed varies greatly depending on the types of activities the consumers will be performing. For example, a worker in a machine shop or factory can be expected to drink about twice the amount of water that a worker in an office building would drink. The number of people that are expected to use the system must also be known.
- The temperature of the water leaving the cooler. Drinking water temperatures should be regulated based on the type of work the consumers are doing. The heavier the work, or the warmer the room temperature, the warmer the drinking water must be.
- The temperature of the water entering the cooler. In order to calculate the amount of heat that must be removed to cool the water, the temperature difference between the incoming and outgoing water must be known.

The table in **Figure 50-15** lists different types of water cooler applications, the rates of consumption that can be expected for those applications, and the temperature of water that should be supplied for each application. These values, in combination with the temperature of the supply water and the number of people expected to use the system, can be used to quickly calculate the service heat load for a water cooling system.

Example:

The "heavy manufacturing" usage listing on the table in **Figure 50-15** indicates that drinking water should be kept at a temperature between 50°F and 55°F. Also, 1/4 gallon of water per hour per person will be consumed.

A production foundry can be classified as heavy manufacturing. If the foundry employs 50 workers for a period of eight hours, the water load per day would be 50 people × 8 hours × 1/4 gal/hr·person, or 100 gal of water. In other words, the system must be capable of cooling 100 gallons of water during the 8-hour workday.

Water Requirements

Usage	Final Temp. Required (°F)	Total Amount of Water Used and Wasted
Office building—employees	50	1/8 gallon per hour per person
Office building—transients	50	1/2 gallon per hour for each 250 persons per day
Light manufacturing	50–55	1/5 gallon per hour per person
Heavy manufacturing	50–55	1/4 gallon per hour per person
Restaurant	45–50	1/10 gallon per hour per person
Cafeteria	45–50	1/12 gallon per hour per person
Hotels	50	1/2 gallon per room (14 hr. day)
Theaters	50	1 gallon per hour per 75 seats
Stores	50	1 gallon per hour per 100 customers per hour
Schools	50–55	1/8 gallon per hour per student
Hospitals	45–50	1/12 gallon per day per bed

Note: The total amount of water used and wasted varies with the type of installation and kind of service. This table will serve as a basis for determining the cooler capacity required.

Dispensed Water Div. of Elkay Mfg. Co.

Figure 50-15. Table listing the recommended temperature and quantity of cooled drinking water that should be provided in various public places and places of work.

Copyright Goodheart-Willcox Co., Inc.

If the incoming water in the supply pipe is 75°F, the cooler must reduce its temperature 20°F in order to provide water that is 55°F. Since there are 8.34 lb of water in 1 gallon, and the specific heat for water is 1 Btu/lb·°F, the service heat load can be computed as follows:

Formula:

Service heat load = specific heat × weight × temp. difference

Solution:

Service heat load = 1 Btu/lb·°F × (100 gal × 8.34 lb/gal) × 20°F
= 16,680 Btu

Calculating the Heat Leakage Load for a Water Cooler

The amount of heat leakage is determined by the materials used to construct the insulated water-storage parts of the system, the thickness of the materials, and their exterior surface area. Insulation 1″ to 3″ thick is common for water-cooling insulations. Ice water insulation is typically 1 1/2″ thick. The heat leakage load for standalone water-cooling systems is calculated the same way as the heat leakage load for cabinets.

50.2 Thermodynamics of the Basic Refrigeration Cycle

Thermodynamics is the science that describes the relationships between heat and mechanical action. The compression refrigeration cycle is a good example of the interaction of heat and mechanical action in a closed system. Pressurized refrigerant that is in the liquid state and near room temperature passes through a metering device, which reduces the pressure on the refrigerant. The temperature of the refrigerant also decreases. However, because the boiling point of the refrigerant decreases along with the pressure, the latent heat in the refrigerant increases as sensible heat decreases. As a result, the enthalpy remains constant. The metering device does not remove or add heat. It only converts some sensible heat to latent heat. This process results in a large pressure and temperature drop without gaining or losing heat (Btu) and is known as ***adiabatic expansion***.

The drop in pressure and corresponding drop in boiling point causes some of the refrigerant to immediately vaporize as it passes through the metering device. When this refrigerant vaporizes, it absorbs heat from the remaining refrigerant. The refrigerant that immediately vaporizes as it passes through the metering device is referred to as flash gas.

The remainder of the refrigerant absorbs heat from the evaporator and, therefore, from the cabinet, until that refrigerant also vaporizes. The rate at which heat is absorbed by the refrigerant as it vaporizes is known as the *latent heat of vaporization*. The amount of heat absorbed from the cabinet and evaporator is the ***effective latent heat***.

When the refrigerant vapor leaves the evaporator, it travels along the suction line. During this movement, the pressure of the vapor decreases slightly (usually 2 psi [14 kPa]). It increases in temperature by about 10°F (6°C). The term "superheat" refers to heat added to the refrigerant after it has vaporized. The amount of superheat is all sensible heat and amounts to the difference between the refrigerant's evaporating temperature and the temperature of the vapor at the compressor's inlet.

The compressor then takes the slightly superheated vapor and compresses it. It is compressed to a high-temperature, high-pressure vapor. Because of the pressure applied to the refrigerant, the condensing temperature of the refrigerant can rise to as high as 250°F (121°C), depending on the type of refrigerant and the pressure generated in the compressor.

Pro Tip

Refrigerant Compression

The term *adiabatic compression* refers to compressing a vapor without adding or removing heat energy from the vapor. When a compressor compresses refrigerant vapor, it decreases the volume of the vapor, which in turn increases the temperature and pressure of the vapor. Because this process is done relatively quickly, only a small amount of heat from the compressor is added to the vapor. As a result, the process is nearly adiabatic.

The superheated and compressed vapor passes to the condenser. If the refrigerant's temperature is higher than ambient temperature, it loses some of its heat to the air or water surrounding the condenser. This lowers the vapor temperature of the refrigerant. Eventually the refrigerant in a condenser loses enough sensible heat to completely desuperheat the refrigerant. At this point, it is at its condensing temperature. If the refrigerant loses any more heat, it will begin to condense from a vapor into a liquid.

Since a high-side refrigerant's condensing temperature is higher than the temperature of any water or air surrounding the condenser, the refrigerant vapor starts losing some of its latent heat of vaporization and begins condensing. The amount of heat the vapor loses determines how much of it condenses into a liquid. After the refrigerant condenses into a liquid, it may

Copyright Goodheart-Willcox Co., Inc.

continue to lose heat to the condenser. This additional heat loss is in the form of sensible heat, meaning the liquid refrigerant's temperature will drop. This is known as subcooling.

The liquid refrigerant returns to the metering device, where the refrigeration cycle is repeated. **Figure 50-16** shows this cycle taking place. It also indicates the temperatures in various parts of the refrigerating system.

50.2.1 Reading a Pressure-Enthalpy Diagram

A graph that plots refrigerant properties against pressure and heat conditions is commonly known as a *pressure-enthalpy diagram*, or *pressure-heat diagram*. Detailed instructions for reading pressure-enthalpy diagrams were presented in Chapter 9, *Introduction to Refrigerants*. The following is a brief overview.

A pressure-enthalpy diagram can be divided into three main areas, **Figure 50-17**. Graph points that fall between the saturated liquid line and the saturated vapor line represent refrigerant that is a mixture of saturated liquid and saturated vapor. Graph points to the left of the saturated liquid line indicate that the refrigerant is all subcooled liquid. Graph points to the right of the saturated vapor line indicate the refrigerant is all superheated vapor.

Many facts can be determined from the simplified pressure-enthalpy diagram in **Figure 50-18**.

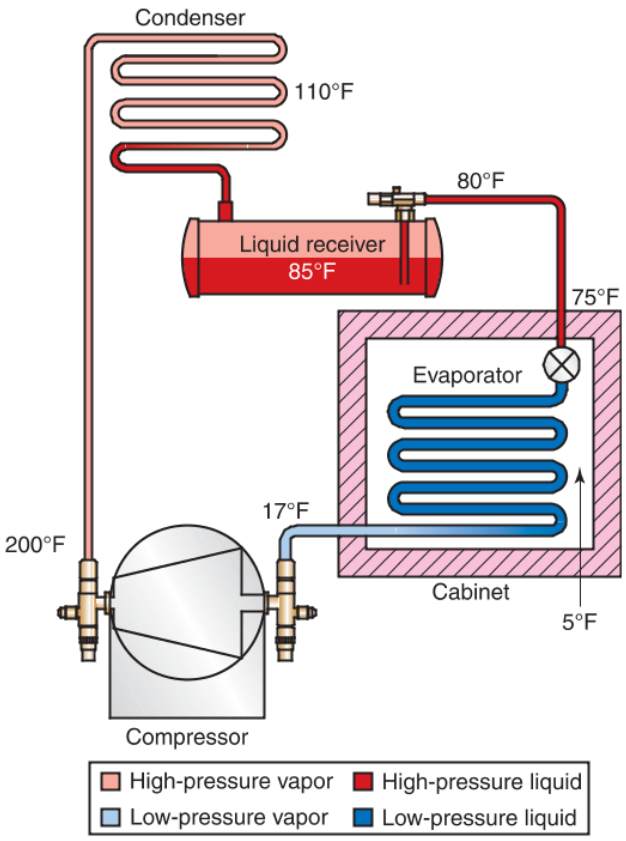

Goodheart-Willcox Publisher

Figure 50-16. Refrigeration system schematic showing the approximate temperatures of refrigerant in various parts of the system.

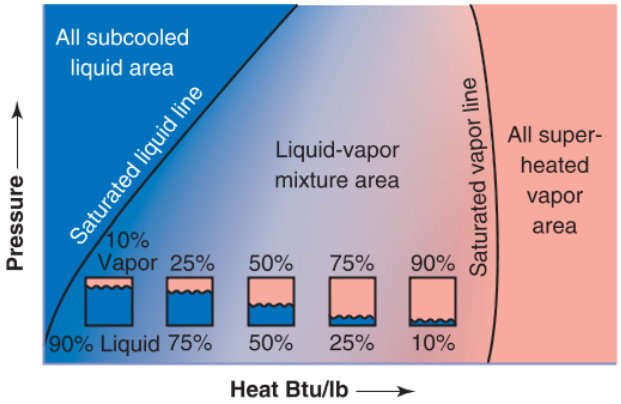

Goodheart-Willcox Publisher

Figure 50-17. The saturated liquid line and saturated vapor line divide a pressure-enthalpy diagram into three distinct areas. Note that, as heat is removed from saturated refrigerant, more of it becomes liquid. As heat is added to saturated refrigerant, more of it becomes vapor.

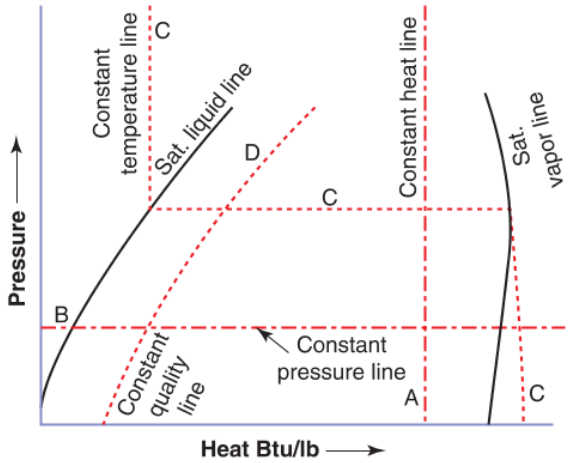

Goodheart-Willcox Publisher

Figure 50-18. Simplified pressure-enthalpy diagram showing the different types of lines included in a pressure-enthalpy diagram. Line A indicates constant heat condition with pressure change. Line B shows constant pressure and condition of refrigerant with changing heat content. Line C indicates constant temperature with changing pressure and heat.

Copyright Goodheart-Willcox Co., Inc.

Along any vertical line, such as A, the heat in one pound of refrigerant is constant. Along any horizontal line, such as B, the refrigerant has a constant pressure. Along stepped lines, like C, the temperature reading is constant. Note that the constant temperature line is vertical in the subcooled liquid area. It is horizontal in the liquid-and-vapor area. It slopes down and slightly to the right in the superheated vapor area.

Refrigerant quality refers to how much of the mass of a refrigerant is in the liquid state and how much is in the vapor state. A 10% quality means that the refrigerant is 10% vapor and 90% liquid. Line D is a line of constant quality.

Saturated Vapor

A *saturated vapor* is a refrigerant vapor under conditions that would cause some of the vapor to condense if any amount of heat were removed from it or if pressure was increased on it. Often saturated vapor is in the presence of some of its own liquid. For example, the vapor in a refrigerant cylinder that is half-full of liquid refrigerant would be a saturated vapor.

Superheated Vapor

A *superheated vapor* is a vapor whose temperature has increased above its 100% saturated condition for the pressure that it is under. When additional heat is added to a 100% saturated vapor, a superheated vapor is created, and its temperature increases above its saturation temperature. A superheated vapor will abide by Charles' and Boyle's gas laws. Superheat is the sensible heat (as measured in degrees) above the vapor's saturation temperature.

When refrigerant vaporizes in an evaporator, it is a saturated vapor at first. However, as this vapor leaves the evaporator and passes through the suction line to the compressor, it usually becomes warmer by 5°F to 15°F (3°C to 8°C). This increase in temperature is called "superheating the low-side vapor."

In a compressor, the low-pressure, superheated vapor gets compressed. Most of the mechanical energy of compression is used to reduce the volume of the refrigerant vapor, which increases its temperature and pressure. Some of the mechanical energy of compression is converted to heat energy due to friction. The heat from friction is absorbed by the refrigerant, further increasing its superheat.

Excessive superheating of refrigerant vapor lowers the efficiency of the system. The less superheating that takes place, the more efficient the system will be. As mentioned earlier, the amount of heat added by a refrigeration compressor is relatively small. On a pressure-enthalpy diagram, like the one shown in **Figure 50-19**, the superheat added by the compressor causes the compression line (B to C) to slant to the right.

There are three general places in the refrigeration system where refrigerant is a superheated vapor:

- In the suction line.
- In the compressor.
- In the discharge line.

In **Figure 50-19**, the portions of the refrigeration cycle where the refrigerant is a superheated vapor are shown in red. When heat is removed from a superheated vapor, its volume and/or pressure decreases without condensation until the refrigerant's temperature reaches its condensation point. In **Figure 50-19**, this cool down is denoted by line from C to D.

Saturated Liquid

The term ***saturated liquid*** refers to a refrigerant in liquid form under conditions that would cause some of the liquid to vaporize if any amount of heat were added or if pressure was decreased. A refrigerant with a quality of 99% is composed of 1% saturated liquid and 99% saturated vapor. As the percentage of saturated vapor decreases, the percentage of saturated liquid increases.

Subcooled Liquid

If a refrigerant consists of 100% saturated liquid and additional heat is removed, the refrigerant is referred to as a *subcooled liquid*. Refrigerant is

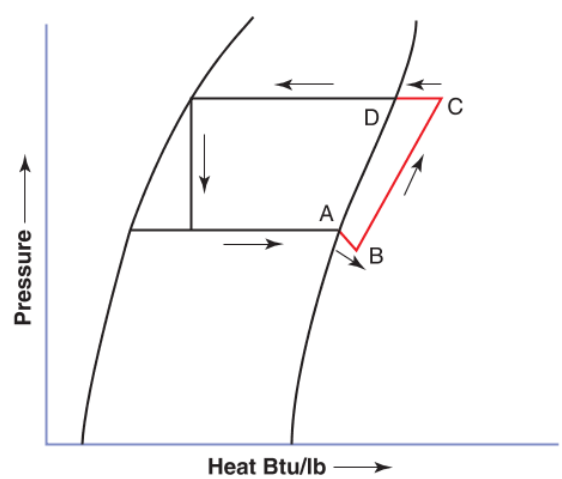

Goodheart-Willcox Publisher

Figure 50-19. The superheated vapor portions of the refrigeration cycle are shown in red. From A to B, superheat is added to refrigerant vapor as it travels through suction line from evaporator to intake valve of compressor. From B to C, superheat is added as the vapor is compressed. From C to D, superheat is removed in the top portion of the condenser.

Copyright Goodheart-Willcox Co., Inc.

subcooled before it enters the refrigerant metering device. Subcooling the refrigerant before it enters the metering device increases the refrigerant's effective latent heat (heat-absorbing capacity).

Effective Latent Heat

The amount of latent heat contained in vaporizing and in condensing refrigerant changes at different pressures. At a lower pressure, more latent heat must be added to a saturated liquid at any given temperature in order to vaporize it.

In a refrigeration system, the high-pressure liquid refrigerant leaving the condenser is throttled down to a low-pressure, low-temperature liquid by the metering device. Some of the liquid forms flash gas as it passes through the metering device, cooling the remaining liquid.

The formation of the flash gas causes the refrigerant to become a mixture of liquid and vapor refrigerant as it enters the evaporator. The refrigerant that has been converted to flash gas can no longer cool effectively. Therefore, the latent heat absorbed to form the flash gas must be subtracted from the total latent heat when determining the cooling ability of the refrigerant at a given pressure. In **Figure 50-20**, the latent heat absorbed to create the flash gas is indicated by the dotted green line. Only the latent heat to the right of the dotted green line contributes to the cooling effect of the system, and it is therefore referred to as the effective latent heat.

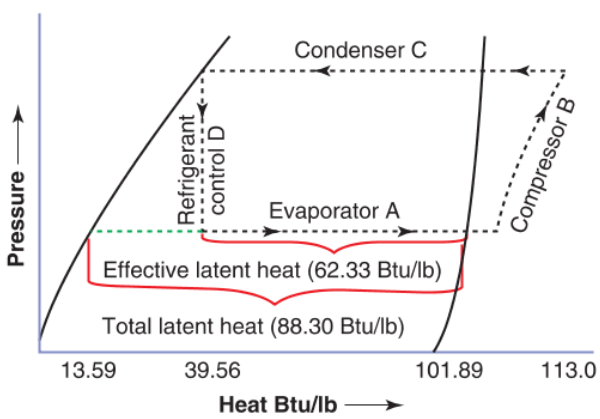

Goodheart-Willcox Publisher

Figure 50-20. Pressure-enthalpy diagram plotting the operation of R-134a system. The total latent heat in 1 lb of refrigerant entering the compressor is 88.30 Btu/lb (101.89 Btu/lb – 13.59 Btu/lb). However, 25.97 Btu/lb (39.56 Btu/lb – 13.59 Btu/lb) of the total latent heat was used to create flash gas, and does not contribute to cooling the cabinet. As a result, the effective latent heat is only 62.33 Btu/lb (88.30 Btu/lb – 25.97 Btu/lb).

The effective latent heat is an average value because low-side pressure and high-side pressure vary somewhat during the operation of the system. Conditions such as oil in the system and system efficiencies can cause variations from the ideal cycle.

For R-134a, the total latent heat of vaporization at 5°F (–15°C) is 88.30 Btu/lb. However, after accounting for the latent heat used to form flash gas in the refrigerant, its actual heat-absorbing ability, or effective latent heat, is only about 62.33 Btu/lb, as shown in **Figure 50-20**. These values are based on the standard evaporating temperature of 5°F (–15°C) and standard condensing temperature of 86°F (30°C).

50.2.2 Practical Pressure-Enthalpy Cycles

The refrigeration cycles for different systems vary depending on applications and conditions. A graph showing two different refrigeration cycles used in freezers is shown in **Figure 50-21**. The cabinet is kept at 0°F (–17.8°C). The refrigerant in the evaporator is at –10°F (–23.3°C). The air surrounding the condenser is 95°F (35°C).

With insulation on the suction line, superheat can be minimized for efficient operation. See the compression/superheat line beginning at point A in **Figure 50-21**. With only 10°F (6°C) of superheat, refrigerant enters the condenser at 180°F (82°C). The condenser must remove 55°F (30°C) of superheat before refrigerant can begin condensing.

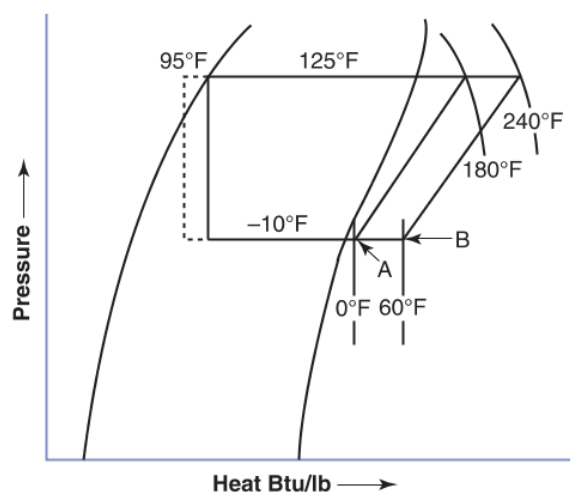

Goodheart-Willcox Publisher

Figure 50-21. Pressure-enthalpy diagram showing the typical refrigeration cycles of an air-cooled system for storing frozen foods.

Copyright Goodheart-Willcox Co., Inc.

If the suction line was not insulated, the cool suction line would continue to absorb heat along its entire length. This would increase the amount of superheat. See the compression/superheat line that begins at point B in **Figure 50-21**. With 60°F (33°C) of superheat, the compressor would pump the refrigerant vapor to the proper pressure at 240°F (116°C) at the condenser inlet. The condenser would need to remove 115°F (64°C) of superheat before the refrigerant could begin condensing.

Not insulating a suction line results in unnecessarily high superheat. As shown in this example, increasing superheat by 60°F (33°C) means that the condenser has to remove 60°F (34°C) more superheat than if the suction line had been insulated properly. Minimizing superheat results in the condenser providing the best possible subcooling. The better the system subcooling, the better the effective latent heat for the evaporator. A typical air conditioning (comfort cooling) cycle is shown in **Figure 50-22** for comparison.

Cascade System

To produce extremely low temperatures efficiently, two refrigeration systems with separate refrigerant circuits may be used instead of one. The two systems are connected by a shared heat exchanger that transfers the heat of one circuit's condenser into the evaporator of the other circuit. The resulting arrangement is called a cascade system.

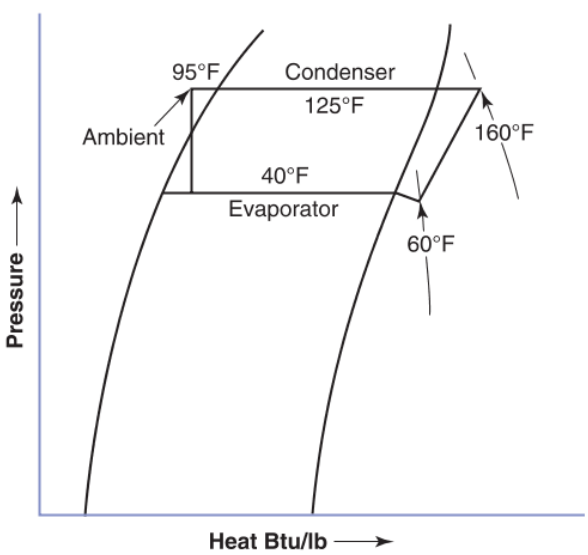

Goodheart-Willcox Publisher

Figure 50-22. Pressure-enthalpy diagram showing the typical cycle of a comfort cooling system with an evaporator temperature of 40°F (4.4°C) operating in an ambient temperature of 95°F (35°C).

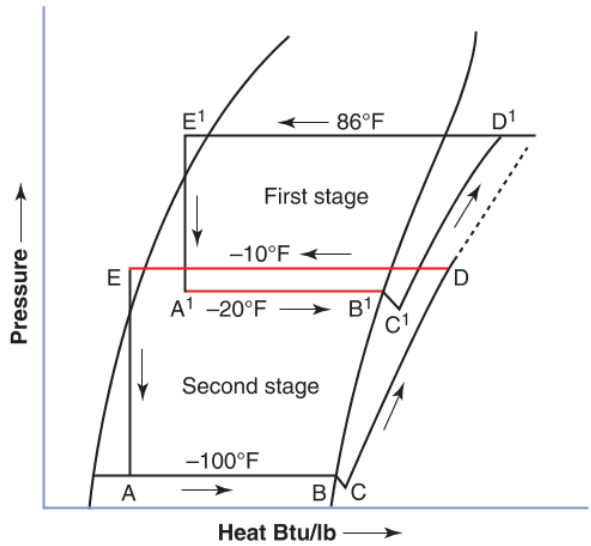

Goodheart-Willcox Publisher

Figure 50-23. Pressure-enthalpy diagram showing the operation of cascade system used to obtain ultralow temperatures. Refrigerant passing through the first-stage evaporator (A^1 to B^1) removes heat from the second-stage condenser (D to E).

In a cascade system, the evaporator of the higher-pressure subsystem (first stage) removes the heat from the condenser of the lower-pressure subsystem (second stage). **Figure 50-23** shows the principle of this type system on a pressure-enthalpy diagram. Many cascade systems use a different refrigerant for the lower pressure subsystem than the refrigerant used in the higher pressure subsystem.

Compound Systems

Some refrigeration systems, especially ultralow-temperature systems, use two compressors connected in series. They pump the very low-pressure suction line vapor up to the condensing pressure and temperature condition. In the first stage, a compressor pumps the vapor up to a midpoint on the compression curve. Then, the compressed vapor is cooled (desuperheated) but remains in vapor form. The second compressor further compresses the cooled intermediate vapor to the final pressure-temperature condition. **Figure 50-24** shows the operation of a compound refrigeration system graphed on a pressure-enthalpy diagram.

Hot-Gas Cycles

A compressor's discharge hot gas may be used for any of the following purposes:

- Defrosting evaporators.
- Preventing suction pressure from dropping too low (when cooling load decreases).

Copyright Goodheart-Willcox Co., Inc.

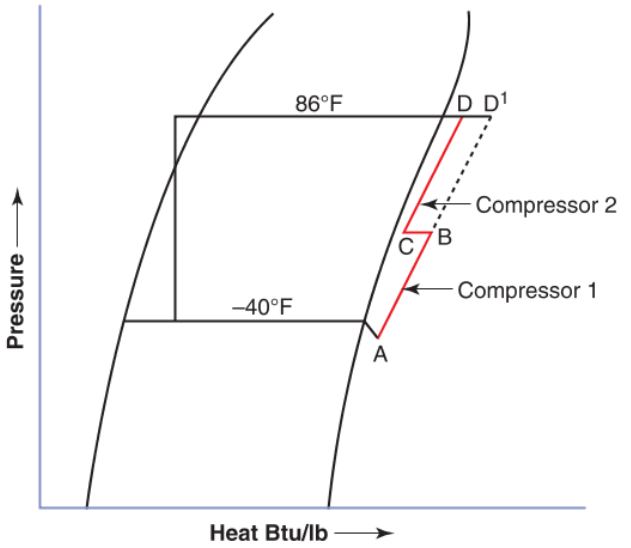

Goodheart-Willcox Publisher

Figure 50-24. Pressure-enthalpy diagram showing the typical cycle of a compound refrigeration system. Compressor 1 (first stage) compresses the vapor partway to its final pressure (A to B). The vapor passes through a heat exchanger, where it is desuperheated (B to C). Compressor 2 (second stage) then compresses the vapor to its condensing pressure (C to D). Using a heat exchanger to cool the refrigerant between compressor stages reduces the amount of heat of compression at the final stage (D^1 to D) and reduces the temperature at the second-stage compressor's exhaust valve but still allows for a high compression ratio needed for low-temperature operation.

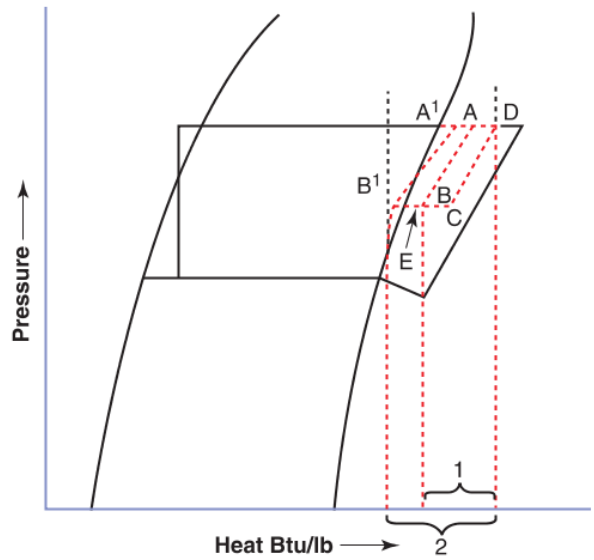

Goodheart-Willcox Publisher

Figure 50-25. Pressure-enthalpy diagram plotting a hot-gas defrosting cycle. The heat lost from A to B, as shown at 1, is the heat used to defrost the evaporator.

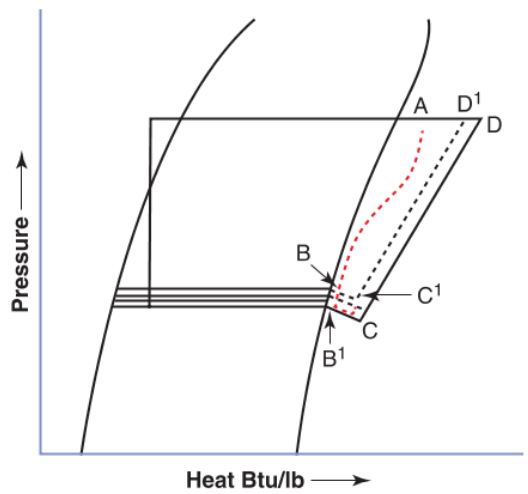

Goodheart-Willcox Publisher

Figure 50-26. A hot-gas bypass system helps maintain a normal low-side pressure in the low side of the system. If the low-side pressure drops to point B^1, the bypass circuit A to B opens and brings low-side pressure up to normal, at C^1. Without the bypassed hot gas, the low-side would operate at a lower pressure.

- Keeping liquid refrigerant from entering compressor.

Many refrigeration systems use an automatic bypass system. A graph of hot-gas bypass being used to defrost an evaporator is shown in **Figure 50-25**. The refrigerant is compressed normally. The hot gas is then bypassed through the evaporator, as shown by the lines from A to B to C to D.

If the hot gas used for defrosting is cooled too much (as indicated by the line from A to B^1), it will become partly liquid. This could cause liquid to enter the compressor. To prevent this, an accumulator is installed on the suction line to ensure that only vapor can reach compressor. The maximum heat for defrosting is shown at 2, unless bypass gas is allowed to condense and is then vaporized (in another evaporator of a multiple system or in a special defrost evaporator).

The cycle for hot-gas bypass for low-pressure control is shown in **Figure 50-26**. The bypass line (controlled by a solenoid valve and a pressure-responsive valve) is piped from the discharge line into the suction line. The bypass circuit is controlled by a sensor or sensing bulb connected to the suction line. The bypass action will return the compression line to approximately C^1 to D^1. The four horizontal evaporator lines represent how the low-pressure side changes from cut-in pressure to cut-out pressure.

14

Copyright Goodheart-Willcox Co., Inc.

Chapter Review

Summary

- A heat load is the amount of heat that must be removed from the conditioned space over a set period of time in order to maintain the desired temperature in the conditioned space.
- Heat leakage load is the amount of heat that leaks through the cabinet over a specific period of time, usually 24 hours.
- The five variables that affect heat leakage load are the length of time through which leakage is measured, the difference between outside temperature and the temperature inside the cabinet, the thickness of the materials used to construct the cabinet, the type of materials used to construct the cabinet, and the surface area of the cabinet.
- A material's thermal conductivity, or K-value, represents the rate at which heat is transferred through a 1" thickness of the material. A material's thermal conductance, or C-value, is the material's thermal conductivity (K-value) divided by its thickness. A material's thermal resistance is equal to the inverse of its thermal conductivity, or C-value. A material's thermal transmittance, or U-value, is equal to the inverse of the sum of thermal resistances in the material, including boundary air films.
- Heat leakage load is calculated by multiplying the surface area of each material in the cabinet by the thermal transmittance, or U-value, of that material and then adding the results together.
- The service heat load, or usage heat load, is the sum of the various heat loads that result from operation of the unit for a given period of time, usually 24 hours. The individual heat loads that make up the service heat load include cooling the products in the cabinet, cooling air changes in the cabinet, removing respiration heat from the products, removing heat from lights and motors, and removing heat generated by people working in the conditioned space.
- The service heat load is affected by the temperature difference between the interior and exterior of the cabinet, the volume of the cabinet's interior, how the cabinet is used, and the length of time through which the load is measured. Service heat load can be calculated manually or estimated using manufacturer's tables.
- A system's total heat load is the sum of its heat leakage load and its service heat load. A properly sized system will remove the total heat load during the appropriate operating cycle.
- Calculating the total heat load for a water cooler is similar to calculating the total heat load for a refrigerated cabinet. The service heat load is determined by the temperature difference between the incoming water and the cooled water and the rate at which water is consumed. The heat leakage load for a standalone water-cooling system is calculated the same way as for a refrigerated cabinet.
- Thermodynamics is the science that describes the relationship between heat and mechanical action. The compression and expansion of fluids in a closed system, such as a refrigeration system, shows thermodynamic principles in action.
- A pressure-enthalpy diagram graphs the physical properties of refrigerant at different points in the refrigeration cycle. The graph can be divided into three distinct areas: subcooled liquid only, saturated liquid and vapor, and superheated vapor only. A refrigerant's heat content, pressure, and temperature throughout a refrigeration cycle are shown on a pressure-enthalpy diagram.

Review Questions

Answer the following questions using the information in this chapter.

1. A refrigeration system's heat leakage load is determined by the materials the cabinet is made of, the surface area of the cabinet's exterior, and _____.
   A. the number of air changes per hour
   B. the products stored in the cabinet
   C. the temperature difference between the inside and outside of the cabinet
   D. All of the above.
2. Which of the following measurements accounts for the boundary air films inside and outside of a cabinet?
   A. C-value.
   B. K-value.
   C. R-value.
   D. U-value.

Copyright Goodheart-Willcox Co., Inc.

3. Which of the following variables does *not* affect the service heat load of a refrigeration system?
   A. The number of people working inside the cabinet.
   B. The number and size of electric motors operating inside the cabinet.
   C. The quantity and types of products stored in the cabinet.
   D. The thermal conductance of the cabinet's walls.
4. The three types of heat that must be considered when calculating the product heat load are _____.
   A. latent heat, sensible heat, and superheat
   B. latent heat, respiration heat, and subheat
   C. latent heat, respiration heat, and sensible heat
   D. respiration heat, sensible heat, and superheat
5. Which of the following variables are used to calculate the sensible heat load of a product?
   A. Latent heat, product weight, and respiration heat.
   B. Latent heat, product weight, and temperature change.
   C. Product weight, specific heat, and temperature change.
   D. Respiration heat, specific heat, and temperature change.
6. A refrigerant quality of 30% means that the refrigerant is _____.
   A. 30% liquid and 70% vapor
   B. 70% liquid and 30% vapor
   C. subcooled by 30°F
   D. superheated by 30°F
7. When a refrigeration system's suction line that is cooler than ambient temperature is not insulated, heat absorbed into the suction line _____.
   A. does not affect the system at all
   B increases superheat
   C. increases system efficiency
   D. All of the above.
8. A line that is completely vertical in a pressure-enthalpy diagram shows constant _____.
   A. heat (enthalpy)
   B. pressure
   C. refrigerant quality
   D. temperature
9. A line that is completely horizontal in a pressure-enthalpy diagram shows constant _____.
   A. heat (enthalpy)
   B. pressure
   C. refrigerant quality
   D. temperature
10. On a pressure-enthalpy diagram, a line that is vertical in the liquid-only portion, horizontal in the liquid-vapor portion, and slants slightly to the right from vertical in the gas-only portion shows constant _____.
   A. heat (enthalpy)
   B. pressure
   C. refrigerant quality
   D. temperature

Copyright Goodheart-Willcox Co., Inc.

CHAPTER 51 Commercial Refrigeration Component Selection

Chapter Outline

51.1 Sizing Compressors, Condensers, and Evaporators
- 51.1.1 Selecting a Compressor
- 51.1.2 Selecting a Condenser
- 51.1.3 Selecting an Evaporator
- 51.1.4 Liquid Receiver Sizing

51.2 Calculating Theoretical Compressor Volume
- 51.2.1 Volumetric Efficiency
- 51.2.2 Factors Affecting Volumetric Efficiency

51.3 Designing Piping
- 51.3.1 Pressure Drop
- 51.3.2 Refrigerant Velocity
- 51.3.3 Oil Circulation
- 51.3.4 Condenser Condensate Line
- 51.3.5 Liquid Line
- 51.3.6 Suction Line
- 51.3.7 Compressor Discharge Line

Learning Objectives

Information in this chapter will enable you to:

- Identify the factors that affect compressor sizing.
- Calculate a compressor's required capacity based on its total heat load and operating cycle.
- Summarize the factors that affect the heat transfer rates of evaporators and condensers.
- Use tables from manufacturers to size compressors, condensers, and evaporators.
- Calculate a compressor's theoretical volume and volumetric efficiency.
- List the basic criteria that must be considered when sizing refrigerant lines.

Technical Terms

bore
condenser condensate line
operating cycle
static loss
stroke
total equivalent length
total heat of rejection (THR)
volumetric efficiency

Review of Key Concepts

Reviewing these concepts from earlier chapters will help you understand new concepts presented in this chapter:

- A commercial refrigeration system's heat load is the amount of heat that it must remove from a conditioned space over a set period of time in order to maintain the desired temperature in the space. (Chapter 50)
- Relative humidity is the amount of moisture in an air sample compared to the total amount of moisture the same sample would hold if it were completely saturated at the same temperature. Relative humidity is stated as a percentage. (Chapter 27)
- A saturated vapor produces condensate (liquid) if it loses heat (Btu) or applied pressure increases. A saturated vapor's temperature is equal to its boiling point at the given pressure. (Chapter 5)
- Air-cooling evaporators, such as natural-draft and forced-draft evaporators, are evaporators that are designed to directly cool the air in a conditioned space. Liquid-cooling evaporators are designed to cool a liquid rather than air. (Chapter 21)
- A modulating refrigeration system is able to adjust its capacity to more closely match a variable heat load. Modulating systems may use two or more compressors operating in parallel, one single compressor capable of varying its speed or output, or hot-gas bypass for capacity control. (Chapter 49)

Introduction

Commercial refrigeration often requires the installation of custom systems that are designed for a specific application. For instance, the existing space available in a building may dictate the size of a walk-in cabinet. The first step in sizing a custom refrigeration system is to determine the purpose of the system. The product to be refrigerated determines the type of refrigerant and the size of equipment to be used.

Low-temperature applications, such as freezers that operate from 0°F to –60°F (–18°C to –51°C), may use R-404A or R-508B with multiple compressors in a cascade system to achieve low temperatures. Mid-temperature applications, such as grocery display cases that operate from 35°F to 45°F (2°C to 7°C), may use a secondary loop refrigeration system circulating a non-phase changing refrigerant that absorbs heat but does not vaporize. Higher-temperature applications, such as florist cabinets, may use R-134a with a hermetic compressor and require high humidity. Since each application is unique, the condensing and evaporating units must be matched to the specific refrigeration requirements of the conditioned space.

Video

- Piping Considerations

51.1 Sizing Compressors, Condensers, and Evaporators

A preliminary step in designing a commercial refrigeration system is estimating anticipated total heat loads. The total heat load determines how much cooling capacity the system must have in order to function effectively and efficiently. The total heat load represents the total amount of heat added to the conditioned space in a 24-hour period.

The selection and installation of commercial refrigeration equipment requires a technical understanding of the variables involved. The capacity of the metering device, type of temperature control, method of air circulation, and specific duty of the system affect the selection of the compressor, condenser, and evaporator. These variables can have a profound effect on the system's operation.

Selecting Components for a Commercial Refrigeration System

Commercial refrigeration components are selected based on the total heat load for the system. Many methods are used to select these components. The following is a basic overview of one method:

1. Select the compressor and condenser using capacity tables provided by manufacturers.
2. Select the evaporator to match the compressor capacity.
3. Select other system components based on compressor, evaporator, and system characteristics.

Pro Tip

Component Sizing

The refrigeration component sizing and selection information in this chapter provides a simplified overview of the process. The type of refrigerant, compressor, condenser, and evaporator are unique to each application. Refer to manufacturers' information and advanced technical manuals for additional information.

51.1.1 Selecting a Compressor

One of the first components selected for a system is the compressor. The compressor is the heart of a refrigeration system, using mechanical energy produced by an electric motor to pump refrigerant through the system. The refrigerant picks up heat in one place and releases it in another place.

Basically, a compressor must remove vapor from the evaporator fast enough to enable the refrigerant to vaporize at the correct low pressure. Refrigerant vapor must be removed from the evaporator as fast as heat enters the evaporator in order to vaporize the refrigerant.

A compressor is selected based on manufacturers' tables of compressor capacities. The compressor's capacity must be sufficient to move enough refrigerant through the system to remove the total heat load within the operating cycle. The capacity of a compressor varies based on the suction line temperature and the condensing temperature. The compressor selection also determines the refrigerant to be used to operate the system at maximum efficiency.

Suction Line Temperature

The suction line temperature is determined based on the design temperature of the conditioned space and the temperature difference (TD) between the design temperature and the refrigerant in the evaporator. Other system conditions affecting compressor sizing include the desired relative humidity in the conditioned space and the defrost method used in the system.

Relative humidity in a refrigerated storage space must be controlled. High relative humidity can promote the growth of mold and mildew in some products. Low relative humidity can cause some products to lose moisture and become too dry. Every product has an ideal relative humidity for refrigerated storage. When designing a refrigeration system, a technician determines the relative humidity based on the product to be stored in the space, **Figure 51-1**.

Storage Relative Humidity for Select Products

Product	Relative Humidity (%)
Onions	70–75
Ham	80
Grapes	80–85
Mushrooms	80–85
Beef	84–85
Apples	85–88
Broccoli	90–95
Turnips	95–98

Goodheart-Willcox Publisher

Figure 51-1. A refrigerated storage space must maintain the relative humidity appropriate for the product being stored.

Copyright Goodheart-Willcox Co., Inc.

Once the relative humidity is selected based on the product to be stored, the temperature difference (TD) can be determined. When the TD and the design temperature of the conditioned space are known, you can calculate the saturated suction line temperature. To do so, simply subtract the TD from the design temperature. For example, a 45°F (7°C) refrigerated storage space with a 10°F (5°C) TD would have a suction line temperature of 35°F (2°C). A table showing TDs and relative humidity levels is shown in **Figure 51-2**.

Operating Cycle

The capacity of a compressor is determined in part by its ***operating cycle***, which is the number of hours that it operates per day. A smaller compressor with a longer operating cycle can be as effective as a larger compressor with a shorter operating cycle.

The operating cycle is partly based on the evaporator defrosting requirements. See **Figure 51-3**. Once the operating cycle is determined, the compressor capacity can be calculated by dividing the total heat load (which is based on 24 hours) by the number of hours in the operating cycle.

Temperature Difference and Relative Humidity	
Relative Humidity (%)	**Temperature Difference (°F)**
90–95	8
80–90	10–12
65–80	12–15
50–65	17–22

Goodheart-Willcox Publisher

Figure 51-2. Relationship between relative humidity and temperature difference (TD) in the conditioned space.

Formula for required compressor capacity:

$$\text{Required capacity (Btu/hr)} = \frac{\text{Total heat load (Btu/day)}}{\text{Operating cycle (hr/day)}}$$

Example:

A particular walk-in cabinet used to store lean beef at 35°F (2°C) requires 160,524 Btu/day. The system has a TD of 10°F (5°C) and, thus, a suction line temperature of 25°F (–4°C). Based on the cabinet and suction line temperatures, warm air defrost can be used for the system. For a system with warm air defrost, the operating cycle is 16 hours. Determine the required compressor capacity.

Solution:

$$\text{Required capacity (Btu/hr)} = \frac{\text{Total heat load (Btu/day)}}{\text{Operating cycle (hr/day)}}$$

$$= \frac{160{,}524 \text{ Btu/day}}{16 \text{ hr/day}}$$

$$= 10{,}033 \text{ Btu/hr}$$

The required system capacity can also be expressed in tons of refrigeration effect.

Example:

Given a system load of 10,033 Btu/hr, determine the equivalent load in tons.

Solution:

One ton is equal to 12,000 Btu/hr. Therefore, divide the load by the number of Btu per hour in 1 ton of refrigeration as follows:

$$\text{Required capacity (tons)} = 10{,}033 \text{ Btu/hr} \div 12{,}000 \frac{\text{Btu/hr}}{\text{ton}}$$

$$= 0.84 \text{ tons}$$

Operating Cycle Based on Defrost Requirements		
System Temperatures	**Comment**	**Operating Cycle (hours per day)**
Suction line temperature 30°F or higher.	No defrost cycle needed.	20–22
Suction line temperature below 30°F and cabinet temperature 35°F or higher.	Warm air defrost. Compressor stops and evaporator fans run to defrost the evaporator. One hour of Off cycle for every two hours compressor is run.	16
Suction line temperature below 30°F and cabinet temperature below 35°F.	Dedicated defrost system required.	18–22

Goodheart-Willcox Publisher

Figure 51-3. The system temperature impacts the defrost method, which often determines the operating cycle for the system.

Copyright Goodheart-Willcox Co., Inc.

Thinking Green

Compressor Loads

After calculating the compressor load based on the system operating cycle, some HVACR technicians in the past would add 5% to 10% to the load as a "safety factor" to ensure the system components would not be undersized. Generally, this extra safety factor is unnecessary. The resulting oversized components are an inefficient use of energy. Determining the load based on the operating cycle typically provides a sufficient safety factor. In addition, heat loads are calculated based on the most unfavorable ambient temperature conditions. This provides an additional safety factor for most days of the year.

Condensing Temperature

Compressor capacity is affected by both the suction line temperature and the condensing temperature. The condensing temperature is determined from the characteristics of the condenser, including the condenser type and the ambient design temperature.

Condensers can be air cooled or water cooled. For commercial refrigeration systems, air-cooled condensers are commonly used. Air-cooled condensers in commercial systems generally have a temperature difference (TD) of 10°F to 30°F (5°C to 17°C). The condensing temperature is the ambient design temperature plus the TD.

Example:

A rooftop air-cooled condenser has a TD of 20°F (11°C). The ambient design temperature is 100°F (38°C). Determine the condensing temperature.

Solution:

Condensing temp = Ambient temp + TD
= 100°F + 20°F
= 120°F

Compressor Capacity Tables

Compressor manufacturers provide tables listing compressor capacities. The capacity of a compressor is determined by three factors:

- Refrigerant type.
- Suction line temperature.
- Condensing temperature.

To select a compressor for a given load and conditions, first locate tables for available compressors. Then check the compressor capacities based on the refrigerant type, suction line temperature, and condensing temperature. See **Figure 51-4**.

51.1.2 Selecting a Condenser

A condenser is selected with the compressor. Sometimes, a single condensing unit (consisting of a compressor, condenser, and liquid receiver) is selected. In other cases, the compressor and condenser are selected as separate units.

A condenser is selected based on the ***total heat of rejection (THR)***. THR comprises the total heat load for the system and the energy added to the refrigerant by the compressor. As a result, the required capacity for the condenser is greater than the required capacity for the compressor or the evaporator.

An estimation is often used to determine the energy added to the refrigerant by the compressor.

Average Compressor Capacities (Btu/hr)								
Compressor hp	Suction Line Temperatures (°F)							
	–30		–15		+20		+40	
	Condensing Temperatures (°F)							
	110	120	110	120	110	120	110	120
2	5,200	4,500	9,100	8,200	18,000	16,800	22,800	21,200
5	14,200	12,500	24,800	22,400	41,700	39,300	62,400	58,500
10	31,000	26,000	44,800	43,600	81,000	75,000	120,000	112,000
25	70,000	56,000	96,000	85,000	188,000	174,000	283,000	263,000
50	122,000	100,000	188,500	159,500	375,000	350,000	585,000	550,000

Goodheart-Willcox Publisher

Figure 51-4. Compressor capacities for a given refrigerant at various suction line temperatures and at two different condensing temperatures. These capacities are only examples. Always refer to the capacity values provided by the compressor manufacturer.

Copyright Goodheart-Willcox Co., Inc.

One estimating method multiplies the nominal horsepower of the compressor by 3,000 Btu/hr·hp. A second method of estimating the THR multiplies the compressor capacity by a factor to account for the added energy. The factor used in the calculation depends on the compressor type:

For an open-drive compressor:

THR = Compressor capacity × 1.25

For a hermetic compressor:

THR = Compressor capacity × 1.30

Once the THR is estimated, the condenser is selected based on capacities provided in manufacturers' tables. The design of the condenser is also important. The refrigerant tubes at the core of the condenser reject heat to the surrounding air by convection through the condenser fins attached to the tubes. Condensers are categorized by size and the number of fins per inch (FPI) attached to the refrigerant tubes. See **Figure 51-5**.

The following are some of the factors affecting a condenser's ability to transfer heat:

- Surface area. The greater the number of fins per inch (FPI), the greater the surface area of the condenser and the greater the heat transfer.
- Temperature difference (TD). The greater the TD between the condenser and the cooling medium (air or water), the greater the heat transfer.
- Air/water velocity. The greater the velocity of the cooling medium, the greater the heat transfer.

Condensers are categorized by their cooling medium. Air-cooled condensers are commonly used for commercial refrigeration systems. Water-cooled condensers are also used.

Water-cooled condensers have a much greater capacity than air-cooled condensers. The heat transfer rate for air-cooled condensers varies between 1 Btu/hr·ft^2·°F and 4 Btu/hr·ft^2·°F. The heat transfer rate for water-cooled condensers varies between 100 Btu/hr·ft^2·°F and 500 Btu/hr·ft^2·°F. The capacity of a water-cooled condenser requires the good thermal contact between the shared heat exchanger surface area of the cooling medium and the refrigerant. The flow rate of the water also has a significant impact on the condenser's capacity. See **Figure 51-6**.

Condenser Heat Transfer Rates (Btu/hr·°TD)								
Model	R-22 and R-410A				R-404A			
	8 FPI	10 FPI	12 FPI	14 FPI	8 FPI	10 FPI	12 FPI	14 FPI
A	9,400	10,300	10,800	11,800	9,200	10,100	10,600	11,600
B	21,600	22,900	23,800	24,500	21,200	22,400	23,300	24,000
C	32,400	34,400	35,700	36,800	31,800	33,700	35,000	36,100

Goodheart-Willcox Publisher

Figure 51-5. Table of heat transfer rates for three different condenser models. A condenser's ability to transfer heat varies based on the number of fins per inch (FPI) on the condenser and the type of refrigerant used in the system. Heat transfer rates are listed per degree of TD, so the values in the table must be multiplied by the condenser TD to determine the condenser capacity in Btu/hr.

Condenser Capacity (Btu/hr)						
Water Flow Rate (gpm)	Temperature Difference (°F)					
	15	20	25	30	35	40
2	11,000	14,500	17,900	21,300	24,500	27,600
6	23,800	31,500	38,900	46,100	53,100	59,900
10	31,500	41,700	51,500	61,200	70,600	79,700

Goodheart-Willcox Publisher

Figure 51-6. Table of capacities for a specific water-cooled condenser model. Capacity increases as the water flow rate (listed in gallons per minute) increases and as the temperature difference (TD) increases.

Copyright Goodheart-Willcox Co., Inc.

51.1.3 Selecting an Evaporator

An evaporator removes heat from the conditioned space only when the compressor is running. Therefore, the heat-removing capacity of the evaporator is calculated on the same operating cycle as that of the compressor. Evaporators are selected using capacity data provided by the manufacturer. See **Figure 51-7**.

The capacity of the evaporator should be matched to the capacity of the compressor. When balancing the capacity of the compressor and the evaporator, a technician must make calculations for each based on the same suction line temperature. As the suction line temperature decreases, the capacity of the evaporator increases to remove an increased amount of heat (greater TD).

Factors Affecting Evaporator Capacity

When calculating the capacity of evaporators, a technician should rely on manufacturer specifications. Manufacturers obtain their heat capacity values from actual experiments. Such factors as poor circulation, frosted fins, air turbulence around the evaporator, and even the amount of moisture in the air can affect the capacity of the evaporator.

One of the laws of thermodynamics is that heat always flows from an object at a higher temperature to an object at a lower temperature. The ability of an evaporator to absorb heat from the conditioned space depends on many variables, including the following:

- Surface area. The greater the number of fins per inch (FPI), the greater the surface area of the evaporator and the greater the amount of heat transfer.
- Temperature difference (TD). The greater the TD, the greater the amount of heat transfer.
- Heat conductivity of the material. The greater the conductivity of the material, the greater the heat transfer.
- Thickness of material. The thinner the material, the greater the heat transfer.
- Time. The greater the amount of time the compressor is running, the greater the heat transfer.

Evaporators are made of materials that are good conductors of heat. For air-cooling evaporators, the heat must pass through an air film on the evaporator tubing. Then, the heat travels through the evaporator tubing and the oil or liquid refrigerant film on the inside of the tubing to the refrigerant. Heat is also absorbed by the metal fins of the evaporator and transferred by conduction to the tubing, **Figure 51-8**.

If the air is moved rapidly, heat flow to the evaporator tubing is greater. More air contacts the tubing per unit of time, and the air film is thinner. If the oil or refrigerant film inside the tubing is moved faster, the film will be thinner. Generally, the denser the fluid is, the greater the heat flow. Likewise, the faster the fluid motion is, the greater the heat flow.

Heat transfer rates for the three primary types of evaporators vary significantly:

Performance Data for Evaporator Models

Model	No. of Fans	Airflow (cfm)	Motor Heat (Btu/hr)	Capacity (Btu/hr)			
				Suction Line Temperature (°F)			
				–20	–10	+20	
				Temperature Difference (°F)			
				10	10	10	15
EV-1	1	825	220	4,100	4,300	4,700	7,100
EV-2	2	1,565	440	5,600	5,900	6,400	9,700
EV-3	3	2,340	660	12,200	12,800	14,000	21,000
EV-4	4	3,120	880	16,300	17,100	18,700	28,100
EV-6	6	4,575	1,320	24,500	25,700	28,000	42,300

Goodheart-Willcox Publisher

Figure 51-7. Sample of performance data for various forced-draft evaporator models. Manufacturers provide capacity ratings for their evaporators. Select an evaporator and compressor that have matching capacities.

Copyright Goodheart-Willcox Co., Inc.

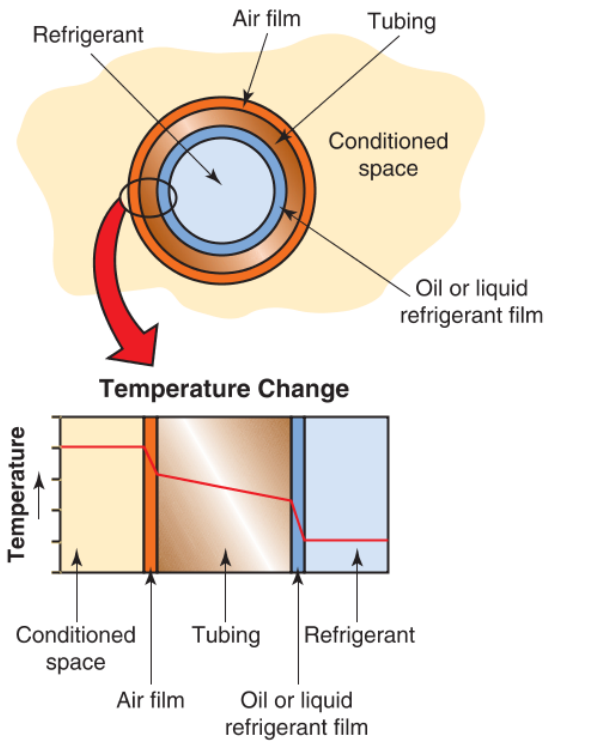

Goodheart-Willcox Publisher

Figure 51-8. Heat transfer from conditioned space to refrigerant through evaporator tubing. Heat passes through an air film, the tubing wall, and an oil or liquid refrigerant film.

- Natural-draft evaporators—approximate rate of 1 Btu/hr·ft²·°F.
- Forced-draft evaporators—approximate rate of 3 Btu/hr·ft²·°F.
- Liquid-cooling evaporators—approximate rate of 15 Btu/hr·ft²·°F to 150 Btu/hr·ft²·°F.

The heat transfer rate of a specific evaporator may vary from these approximations, but the approximate value may be helpful for general estimates and comparison purposes. Always refer to the manufacturer's data for the specific unit.

Example:

What is the approximate capacity of a natural-draft evaporator (a simple cold plate that absorbs heat from the surrounding area) with a surface area of 15 ft², a refrigerant temperature of 22°F (–6°C), and an average cabinet temperature of 42°F (6°C)?

Solution:

To find the evaporator capacity, multiply the heat transfer rate for a natural-draft evaporator (1 Btu/hr·ft²·°F) by the surface area (15 ft²) and the temperature difference (20°F):

Evaporator capacity = 1 Btu/hr·ft²·°F × 15 ft² × 20°F

Evaporator capacity = 300 Btu/hr

Forced-Draft Evaporator Capacities

A forced-draft evaporator is an evaporator with an electric fan mounted near it to increase airflow. The evaporator fan is rated in size by how much air it is able to move in a given time. The common rating is cubic feet per minute (cfm). In a forced-draft evaporator, a large quantity of air flows over the evaporator. This airflow increases the capacity of the evaporator because a greater volume of air comes in contact with the evaporator over time. The table in **Figure 51-9** shows a sample of typical forced-draft evaporator performance data.

Liquid-Cooling Evaporator Capacities

The heat transfer rate of liquid-cooling evaporators can range from 15 Btu/hr·ft²·°F to 150 Btu/hr·ft²·°F. The heat transfer rate is affected by the cooled liquid velocity, evaporator construction, and temperature difference. Liquid velocity is usually measured in feet per minute (fpm). The table in **Figure 51-10** illustrates the significant effect that water velocity and TD can

Forced-Draft Evaporator Performance Data

Model	Fan Size (in)	Airflow (cfm)	Total Surface Area—Fins and Tubes (in²)	Cooling Capacity (Btu/hr)	
				15°F TD	25°F TD
EV-12	12	620	35	2,200	4,500
EV-15	15	1,200	78	5,200	9,000
EV-17	17	2,020	98	6,500	10,500

Goodheart-Willcox Publisher

Figure 51-9. Sample of forced-draft evaporator cooling capacities and other performance information.

Copyright Goodheart-Willcox Co., Inc.

Liquid-Cooling Evaporator Heat Transfer Rates (Btu/hr·ft²·°F)					
Water Velocity (fpm)	Temperature Difference (°F)				
	6	8	10	12	15
150	67	76	83	90	97
200	83	95	103	110	118
250	97	109	115	122	129
300	103	115	123	130	138

Goodheart-Willcox Publisher

Figure 51-10. As water velocity and temperature difference increase, the heat transfer rate also increases. For this particular evaporator, if the water velocity is reduced from 250 fpm to 150 fpm, the cooling capacity of the evaporator is reduced by about 30%.

have on the evaporator's heat transfer rate and, subsequently, on the evaporator's cooling capacity.

51.1.4 Liquid Receiver Sizing

Liquid receivers for a commercial system should be selected to be 15% larger than the total liquid volume in the system. This practice is a safety measure in the event the refrigerant circuit becomes restricted. The restriction could be a clogged filter or frozen moisture stuck in a metering device's valve opening. **Figure 51-11** shows liquid capacity for various models. Note that the capacity of a liquid receiver varies for different refrigerants.

51.2 Calculating Theoretical Compressor Volume

In the previous section, compressor capacity was determined based on manufacturer information. The volume of refrigerant vapor moved through a compressor can also be calculated mathematically. For a reciprocating compressor, the volume of vapor is determined by the ***bore*** (cylinder diameter), ***stroke*** (distance traveled by a piston), number of cylinders, speed of the compressor (rpm), and volumetric efficiency. Using this information, a technician can calculate the heat-removing capacity of the compressor.

As the crankshaft of the compressor completes one revolution, the piston moves from the lowest point of its travel (bottom dead center) to the highest point (top dead center) and back to the lowest point again. On the downstroke, low-pressure refrigerant vapor is drawn into the cylinder. The vapor fills the space between the top of the piston and the head of the cylinder. The piston compresses this vapor on the upstroke. It pushes the vapor through the exhaust valve into the high-pressure side of the system. The volume displaced by the piston on each stroke (movement from bottom dead center to top dead center) is the volume of refrigerant vapor moved through the compressor. See **Figure 51-12**.

Liquid Receiver Data					
Model	Diameter (in)	Length (in)	Inlet/Outlet Size	Capacity (lb)	
				R-134a, R-22	R-404A, R-507
LR-A	4	10	1/4	4.0	3.6
LR-B	5	10	1/4	6.0	5.4
LR-C	5	10	3/8	6.0	5.4
LR-D	6	12	3/8	10.0	9.0
LR-E	6	18	1/2	16.0	14.4

Goodheart-Willcox Publisher

Figure 51-11. Liquid receiver capacities. Capacity depends on the type of refrigerant in the system.

Copyright Goodheart-Willcox Co., Inc.

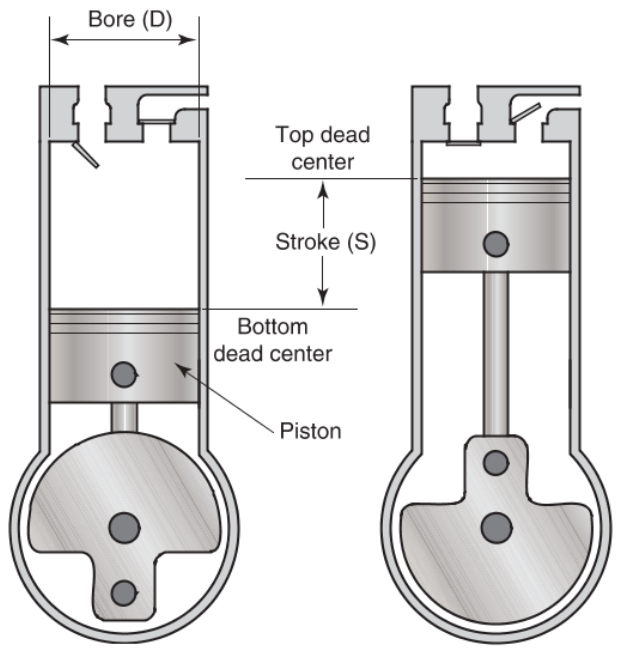

Goodheart-Willcox Publisher

Figure 51-12. Stroke is the distance a piston travels from bottom dead center to top dead center. The volume of vapor displaced by the piston can be calculated by multiplying the stroke by the surface area of the piston head.

Formula for volume of vapor moved per minute through a compressor:

$$V = \frac{\pi D^2}{4} \times S \times N \times R$$

where

V = volume (in^3) pumped per minute
D = diameter of cylinder (inches)
S = length of stroke (inches)
N = number of cylinders
R = revolutions per minute (rpm)

This formula for volume simply calculates the surface area of the piston head, $\pi D^2/4$, and multiplies it by the length of the stroke (S). The resulting product is the displacement volume. Next, this value is multiplied by the number of cylinders (N). Then it is multiplied by the revolutions per minute of the compressor (R). This gives the total volume in cubic inches pumped per minute.

The formula presented in this section calculates the theoretical compressor volume. The actual volume of vapor moved through a compressor is always less than this theoretical volume as a result of manufacturing tolerances and friction losses.

Example:

How much vapor will a two-cylinder compressor pump at 400 rpm if it has a 2″ bore and a 2″ stroke?

Solution:

$$V = \frac{\pi D^2}{4} \times S \times N \times R$$
$$= \frac{3.1416 \times (2'')^2}{4} \times 2'' \times 2 \times 400 \text{ rpm}$$
$$= 3.1416 \text{ in}^2 \times 2'' \times 2 \times 400 \text{ rpm}$$
$$= 5{,}027 \text{ in}^3/\text{min}$$

This volume can be converted into cubic feet per minute (1,728 in^3 = 1 ft^3):

$$V = 5{,}027 \text{ in}^3/\text{min} \times \frac{1 \text{ ft}^3}{1{,}728 \text{ in}^3}$$
$$= 2.91 \text{ ft}^3/\text{min}$$

51.2.1 Volumetric Efficiency

The actual volume of vapor pumped through a compressor is always less than the calculated theoretical volume. A compressor's ***volumetric efficiency*** is the actual volume of vapor pumped divided by the theoretical volume of the compressor cylinder. This value is then multiplied by 100 to obtain a percentage.

Formula for volumetric efficiency:

$$\text{Volumetric efficiency} = \frac{\text{Actual volume}}{\text{Theoretical volume}} \times 100$$

Example:

A compressor is designed to pump 10 in^3 of vapor each revolution. If it pumps only 6 in^3 each revolution, what is the volumetric efficiency of the compressor?

Solution:

$$\text{Volumetric efficiency} = \frac{\text{Actual volume}}{\text{Theoretical volume}} \times 100$$
$$= \frac{6 \text{ in}^3}{10 \text{ in}^3} \times 100$$
$$= 60\%$$

51.2.2 Factors Affecting Volumetric Efficiency

For efficient compressor operation, the volumetric efficiency must be as high as possible. Several conditions affect volumetric efficiency:

- Head pressure. The greater the head (high-side) pressure, the lower the volumetric efficiency. The compressed vapor in the clearance space (space

Copyright Goodheart-Willcox Co., Inc.

within the cylinder when the piston is at top dead center) expands on the piston downstroke. The greater the head pressure, the greater the amount of vapor remaining in the cylinder and not being discharged.

- Low-side pressure. As low-side pressure decreases, so does volumetric efficiency. The lower pressure results in a lower amount of vapor in the cylinder for each stroke.
- Clearance space. The larger the clearance space, the lower the volumetric efficiency. A larger clearance space allows a greater amount of compressed vapor to remain in the cylinder.
- Valve openings. The size and condition of valve openings affect volumetric efficiency. The intake and exhaust valves offer restrictions to the vapor flow. If the intake valve reduces low-side vapor flow into the cylinder, the cylinder will not be completely filled and the efficiency will be lowered. If the exhaust valve sticks, the extra pressure generated in the cylinder will reduce the compressor's efficiency. A reduction in efficiency also occurs if the line from the compressor to the condenser is pinched or otherwise restricted.
- Compressor speed. The compressor piston travels so fast that it prevents the vapor from filling the cylinder chamber completely. Therefore, there are losses in efficiency. The pressure in the cylinder never gets as high as the pressure in the suction line during the suction stroke. The greater the speed of the compressor, the less vapor pumped per stroke.
- Compressor heat. The compressor runs at a warm temperature. Some of this heat warms the vapor as it enters the cylinder, causing the vapor to expand. This reduces the amount of vapor pulled into the cylinder.
- Leaking vapor. Some vapor may leak past the piston into the crankcase, resulting in a reduction in the amount of vapor being discharged by the compressor.

Small compressors used in domestic refrigeration have a bore and stroke of about 1 1/2″ (4 cm). Their volumetric efficiency varies between 40% and 75%, with 60% being an average value. Larger commercial compressors have volumetric efficiencies from 50% to 80%. The average value is 70%. A volumetric efficiency of 60% to 65% is common in air-cooled units.

51.3 Designing Piping

When designing piping for commercial refrigeration systems, technicians must take into account practical considerations. For example, refrigerant lines should be arranged so that they do not interfere with normal inspection or service. Do not run lines that obstruct the view of sight glasses or interfere with the removal of compressor components, such as cylinder heads and end bells. There should also be adequate clearance between refrigerant lines and walls for installing support hangers or insulation. Before sealing insulation around a refrigerant line, test the line's joints and fittings for leaks.

Commercial refrigeration systems have several different types of refrigerant lines, including the compressor discharge line, hot-gas bypass line, condenser condensate line, liquid line, and suction line. While these different lines are sized in a similar manner, the key sizing criteria vary based on the purpose of the line and the state of the refrigerant in it. The basic criteria that must be considered when sizing refrigerant lines include the following:

- Pressure drop.
- Refrigerant velocity.
- Oil circulation.

51.3.1 Pressure Drop

As fluid travels through a pipe, the pressure of the fluid decreases due to friction between the fluid and the walls of the pipe. This pressure drop occurs in refrigerant piping, in airflow through duct systems, and in water flow through plumbing systems.

In refrigeration systems, pressure drop in refrigerant lines should be kept to a minimum. This means that lines should be short and direct with as few fittings as possible. For most lines, the maximum allowable pressure drop is equal to a saturation temperature drop of 2°F (1°C). The actual amount of pressure drop (in psi or kPa) that is equal to a 2°F drop in saturation temperature varies based on the type of refrigerant.

For example, two different refrigeration systems operate at an evaporator saturation temperature of 20°F (–7°C), but one uses R-134a as a refrigerant and the other uses R-404A. The pressure of R-134a at 20°F is 18.4 psi (127 kPa), and its pressure at 18°F (–8°C) is 17.0 psi (117 kPa). Thus, a 2°F drop in saturation temperature from 20°F to 18°F is equal to a pressure drop of 1.4 psi (10 kPa) for R-134a. For R-404A, however, the pressure at 20°F is 56.8 psi (392 kPa), and the pressure at 18°F is 54.2 psi (374 kPa). This means that R-404A can have a 2.6 psi (18 kPa) pressure drop for the same 2°F drop in saturation temperature.

Pressure drop is affected by refrigerant line diameter, line length, and number and types of fittings used. Smaller lines have a greater pressure drop. If refrigerant lines are too small, they create excessive

Copyright Goodheart-Willcox Co., Inc.

pressure drop and cause a reduction in system efficiency. Increasing the line size decreases the pressure drop.

The length of the refrigerant line also affects pressure drop. As the length of the line increases, the pressure drop increases. Each bend, fitting, and valve in the line causes additional pressure drop. Pressure drop due to fittings is usually expressed as an equivalent length of line. See **Figure 51-13**.

The equivalent length for each fitting and valve is added to the length of the line itself to find the line's ***total equivalent length***. When determining pressure drops by looking up line lengths in a sizing table, remember to determine the line's total equivalent length, not just the length of the line itself. Neglecting the values of the valves and fittings can result in improper refrigerant line sizing.

51.3.2 Refrigerant Velocity

The velocity of the refrigerant in the refrigerant lines is a significant concern when determining line sizes. The refrigerant velocity must be sufficient to ensure that oil is properly circulated throughout the system. If the refrigerant velocity is too low, excessive amounts of oil can be trapped in certain parts of the system.

The required minimum velocity for a refrigerant line depends on the size of the line, the type of refrigerant, and the temperature of the refrigerant. Some manufacturers provide a chart for determining refrigerant velocity based on these three variables. This chart can be used to find the refrigerant velocity in different types of refrigerant lines, such as the suction line, liquid line, and compressor discharge line, **Figure 51-14**.

For example, to use the chart in **Figure 51-14** to determine suction line velocity, start by finding the system's capacity at the top of the chart, which is 5.5 tons. Next, draw a vertical line down from 5.5 tons until it intersects with the line that corresponds with the system's evaporator temperature, which is –40°F (–40°C) in this example.

At the intersection of those two lines, draw a horizontal line across to the different tubing sizes on the left-hand side of the chart. After choosing one of the tubing sizes (5 1/8″ for example), draw a vertical line down from where the horizontal line and tubing size intersect. At the bottom of the chart, the vertical line intersects with a line indicating the refrigerant velocity for that tubing size. Thus, the chart shows that a 5 1/8″ suction line with an evaporator temperature of –40°F has a velocity of 730 fpm (feet per minute). If the velocity is too low or too high for a certain application, choose a different tubing size and draw a new line down to find the velocity for that size.

There is a tradeoff between pressure drop and refrigerant velocity. Larger lines cause less pressure drop, but they require a higher velocity to ensure that oil flows with the refrigerant. Likewise, low-temperature lines require higher velocities than high-temperature lines because oil is more viscous and flows less easily at lower temperatures. In general, commercial refrigeration systems should be designed with low refrigerant velocities to ensure efficient compressor performance and low operating costs.

Equivalent Length for Fittings and Valves (feet)

Nominal Size	Fittings				Valves		
	90° Std Elbow	45° Std Elbow	Tee (Branch Flow)	Tee (Through Flow)	Globe or Solenoid	Angle	Gate
1/2	1.4	0.7	2.7	0.9	17	6	0.6
7/8	2.0	0.9	4.0	1.4	22	9	0.9
1 5/8	4.0	2.1	8.0	2.6	43	18	1.8
2 1/8	5.0	2.6	10.0	3.3	84	35	3.2
3 1/8	7.5	4.0	15.0	5.0	84	35	3.2
4 1/8	10.0	5.2	21.0	6.7	120	47	4.5
6 1/8	16.0	7.9	30.0	10.0	170	70	7.0

Goodheart-Willcox Publisher

Figure 51-13. Pressure drop in a refrigerant line is based on the total equivalent length of the line. To determine total equivalent length, add an equivalent length for each fitting and valve to the actual length of the line.

Copyright Goodheart-Willcox Co., Inc.

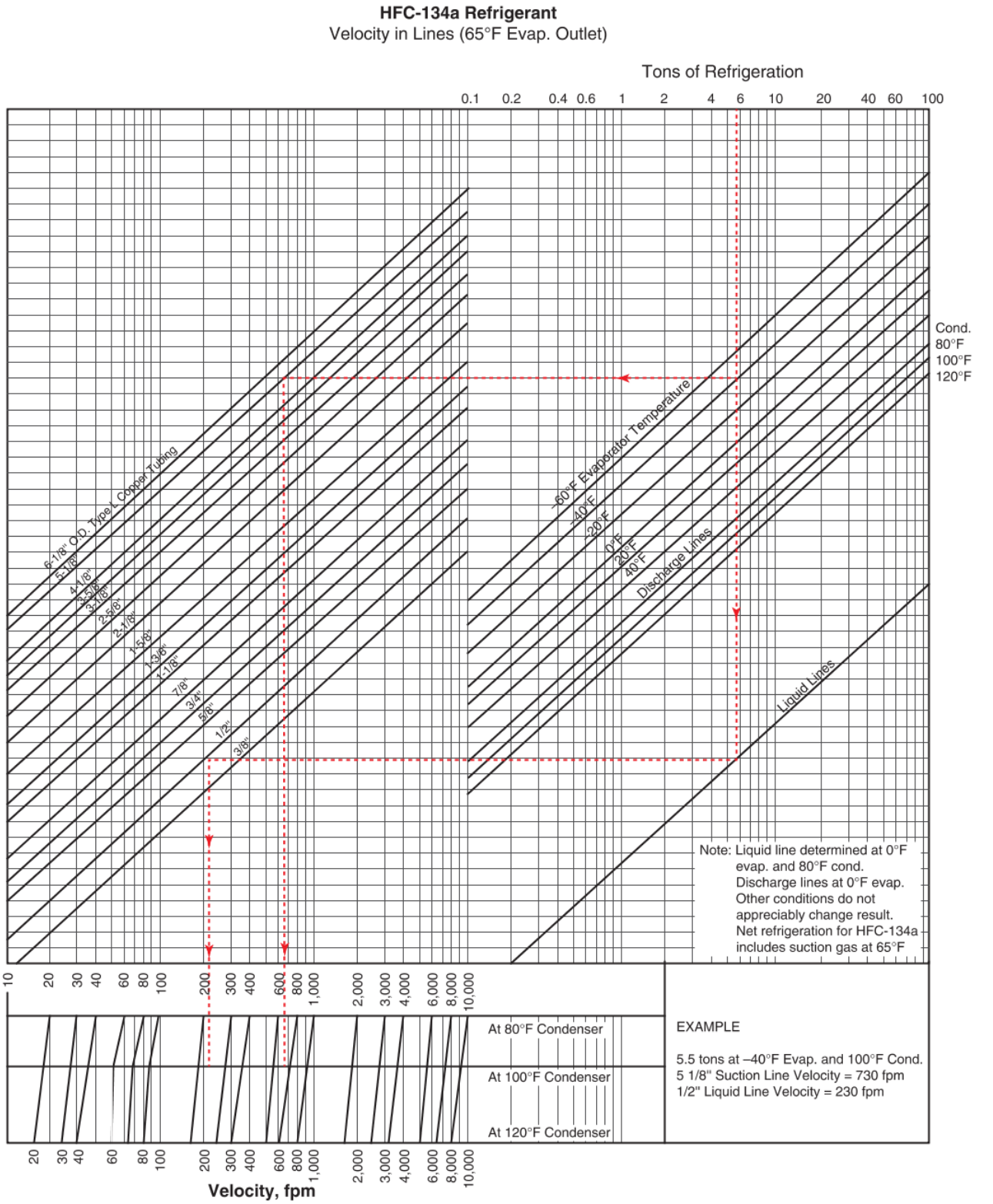

DuPont Company

Figure 51-14. Chart for systems using R-134a that can be used to find the refrigerant velocity in the liquid line, discharge line, and suction line based on different line sizes.

Copyright Goodheart-Willcox Co., Inc.

The refrigerant velocity in both the suction line and the compressor discharge line ranges from 500 fpm to 3,000 fpm. Velocities greater than 3,000 fpm may cause noise problems or excessive pressure drop. Although refrigerant velocity varies widely based on the type of refrigerant, most suction lines and compressor discharge lines have a velocity around 700 fpm for horizontal runs and 1,500 fpm for vertical risers. In the liquid line, the refrigerant velocity ranges from 100 fpm to 300 fpm. The condenser condensate line should be sized for 100 fpm or less.

51.3.3 Oil Circulation

As a compressor operates, most of the lubricating oil remains in the compressor, but some oil mixes with the refrigerant and travels through the system. Since the oil in a refrigeration system serves no purpose other than to lubricate the compressor, an adequate refrigerant velocity is necessary to ensure that oil is returning to the compressor. If not enough oil is returned to the compressor, the following problems can occur:

- Seized or badly worn bearings due to overheating from a lack of lubrication.
- Broken valves, pistons, or connecting rods in the compressor.
- Compressor failure or destruction.

In addition to possibly destroying the compressor, inadequate oil return also reduces system capacity. Instead of returning to the compressor, lubricating oil becomes trapped in other parts of the system, such as in the evaporator and condenser coils. Excess oil in either the evaporator or condenser can coat the interior of the coil, acting as insulation and reducing the coil's ability to transfer heat. As a result of poor heat transfer, the temperature in the evaporator increases, which can cause the metering device to feed more liquid refrigerant into the evaporator. This can lead to liquid refrigerant entering the compressor, causing slugging and eventual compressor failure.

51.3.4 Condenser Condensate Line

In a commercial refrigeration system equipped with a liquid receiver, the ***condenser condensate line*** runs from the outlet of the condenser to the inlet of the liquid receiver. The condensate line should be kept as short as possible. The condenser condensate line should have a pressure drop of 0 psi and a velocity of 100 fpm or less. These two factors make it almost impossible to oversize the condenser condensate line. See **Figure 51-15**.

If the condenser condensate line is undersized or excessively long, it can restrict the flow of refrigerant into the receiver, causing some liquid refrigerant to be held in the condenser. Liquid refrigerant in the condenser reduces the condenser's available surface area for heat transfer. This leads to a decrease in condenser capacity, an increase in head pressure, and a reduction in the overall system capacity. In addition, the increased head pressure also forces the compressor to use more electrical power, which increases operating costs.

Condenser Condensate Line Sizes (R-410A)			
System Capacity		Equivalent Line Length (ft)	
Btu/hr	Tons/hr	25	50
18,000	1.5	1/2	1/2
30,000	2.5	1/2	1/2
42,000	3.5	1/2	5/8
60,000	5.0	5/8	5/8
120,000	10.0	5/8	3/4
240,000	20.0	7/8	7/8
420,000	35.0	1 1/8	1 3/8
600,000	50.0	1 3/8	1 3/8

Goodheart-Willcox Publisher

Figure 51-15. Example of a sizing chart for a condenser condensate line. To find the correct line size, a technician must know the system capacity and the condensate line's total equivalent length. The sizes in the chart are valid for only the refrigerant listed.

51.3.5 Liquid Line

The liquid line connects the liquid receiver to the metering device or the condenser to the metering device in a system without a liquid receiver. The most important factor in sizing the liquid line is minimizing the amount of pressure drop. Excessive pressure drop can cause insufficient liquid pressure at the metering device and flash gas formation in the liquid line, reducing system efficiency.

The refrigerant velocity in the liquid line is less important because oil and liquid refrigerant mix easily, which means lower velocities will not inhibit proper oil flow. Typically, the refrigerant velocity in the liquid line is between 100 fpm and 300 fpm.

The liquid line should be sized so that the pressure drop does not exceed a corresponding drop of 1°F to 2°F in saturation temperature. Excessive pressure

Copyright Goodheart-Willcox Co., Inc.

drop in the liquid line can be caused by a line that is too small, is too long, or has too many fittings and valves, **Figure 51-16**.

In addition, vertical risers are also a source of pressure drop. In a riser, the liquid refrigerant at the top of the riser exerts force on the liquid refrigerant at the bottom of the riser. ***Static loss*** is the pressure drop that occurs from the bottom of a riser to the top due to the weight of liquid refrigerant in the line. In general, the static loss in a riser is approximately 0.5 psi per foot although the actual value varies based on the type of refrigerant. See **Figure 51-17**.

Liquid Line Sizes for Low-Temperature Systems (R-410A)			
System Capacity		Equivalent Line Length (ft)	
Btu/hr	Tons/hr	25	50
18,000	1.5	5/8	3/4
30,000	2.5	3/4	7/8
42,000	3.5	7/8	1 1/8
60,000	5.0	1 1/8	1 1/8
120,000	10.0	1 3/8	1 5/8
240,000	20.0	1 5/8	2 1/8
420,000	35.0	2 1/8	2 5/8
600,000	50.0	2 5/8	2 5/8

Goodheart-Willcox Publisher

Figure 51-16. Example of a liquid line sizing chart. A technician must know the system capacity and the liquid line's total equivalent length to find the correct liquid line size. The sizes in the chart are valid for only the refrigerant listed.

To counteract excessive pressure drop in the liquid line, a technician should keep the liquid line as short as possible and avoid using vertical risers. If this cannot be avoided, a suction line-liquid line heat exchanger can be used to subcool refrigerant in the liquid line. Although a riser or an excessively long line causes pressure drop and decreases the refrigerant's saturation temperature, the additional subcooling provided by a heat exchanger helps keep the temperature of the liquid refrigerant below the saturation temperature, preventing the formation of flash gas. Subcooling is the only way to reduce the effect of excessive pressure drop.

Pro Tip

Liquid Line Insulation

The liquid line is usually not insulated unless it is exposed to extreme heat, such as in an attic or on a hot, metal roof. In these cases, insulating the liquid line helps prevent the high ambient temperature around the liquid line from transferring heat to refrigerant in the line. If the line absorbs too much heat, it can raise the temperature of the liquid refrigerant, causing it to evaporate and form flash gas.

51.3.6 Suction Line

The suction line runs from the evaporator outlet to the compressor inlet. A technician must consider both pressure drop and refrigerant velocity when sizing the suction line.

An excessive pressure drop in the suction line increases the refrigerant vapor volume and causes the compressor to operate at a lower suction pressure. This reduces the compressor's capacity and increases its power usage by forcing it to pump a higher volume of refrigerant vapor to maintain the desired temperature in the evaporator. As with the liquid line, the suction line should be

Pressure Drop in Risers										
Refrigerant	Liquid Line Rise (ft)									
	10		20		30		50		100	
	psig	°F	psig	°F	psig	°F	psig	°F	psig	°F
R-22	4.8	1.6	9.7	3.1	14.5	4.7	24.2	8.0	48.4	16.5
R-134a	4.9	2.0	9.8	4.1	14.7	6.3	24.6	11.0	49.1	23.7
R-507, R-404A	4.1	1.1	8.2	2.1	12.2	3.3	20.4	5.6	40.8	11.8

Goodheart-Willcox Publisher

Figure 51-17. The weight of the refrigerant in a liquid line riser creates a pressure drop. The amount of pressure drop varies by refrigerant because different refrigerants have different densities.

Copyright Goodheart-Willcox Co., Inc.

sized so that the maximum pressure drop is equal to a saturation temperature drop of 2°F. See **Figure 51-18**.

Whereas liquid refrigerant mixes with lubricating oil and transports it with ease, refrigerant vapor is a poor carrier of oil. In addition, oil in the suction line is at a lower temperature than in the liquid line, making it more viscous. As a result, maintaining the proper refrigerant velocity in the suction line is critical to ensuring that oil is returned to the compressor.

For horizontal suction lines, the refrigerant velocity is normally between 500 fpm and 700 fpm, but for vertical risers, the velocity is about double (between 1,000 fpm and 1,500 fpm). These values, however, vary by refrigerant, so always follow equipment or refrigerant manufacturer recommendations. If there is ever a conflict between the suction line size needed to minimize pressure drop and the suction line size needed to ensure adequate velocity for oil return, use the suction line size that achieves the required minimum velocity.

The suction line should slope downward to the compressor about 1/4″ for every 10′ (6 mm for every 3 m). This permits oil drainage down the suction line to the compressor. If the suction line has any vertical risers, install traps at the base of each riser. An inverted trap can be installed at the top of the riser as well to prevent oil from flowing back down the riser when the system is not operating. These traps prevent a large slug of oil from returning to the compressor during system start-up, **Figure 51-19**.

In addition, a vertical riser should have a smaller diameter than a horizontal suction line. Since the required velocity for a vertical riser is greater, the smaller diameter helps maintain the minimum velocity required for oil return.

Some commercial refrigeration systems vary capacity by using multiple compressors or a single compressor with an internal unloader. In these types of systems, called modulating refrigeration systems, a single suction line may cause unacceptably high pressure drop or low refrigerant velocity. For example, if the suction line is sized for a light heat load, the line may produce excessive pressure drop at maximum load.

On the other hand, if the suction line is sized for the system's maximum heat load, the system may not produce enough vapor as the heat load decreases to maintain an adequate velocity for sufficient oil return. This occurs because as the heat load decreases, either one or more compressors stop pumping in a multiple-compressor system, or one or more cylinders stop pumping in a compressor capable of unloading cylinders.

One solution to suction line problems in a modulating refrigeration system is to use a double suction line. The two lines should be sized so that together they provide an acceptable refrigerant velocity and pressure drop at maximum load. One line should be larger than the other and be equipped with an oil trap. See **Figure 51-20**.

When the system is at full capacity, both suction lines carry the refrigerant vapor at an adequate velocity.

Suction Line Sizes for Low-Temperature Systems (R-410A)

System Capacity		Equivalent Line Length (ft)	
Btu/hr	Tons/hr	25	50
18,000	1.5	5/8	3/4
30,000	2.5	3/4	7/8
42,000	3.5	7/8	1 1/8
60,000	5.0	1 1/8	1 1/8
120,000	10.0	1 3/8	1 5/8
240,000	20.0	1 5/8	2 1/8
420,000	35.0	2 1/8	2 5/8
600,000	50.0	2 5/8	2 5/8

Goodheart-Willcox Publisher

Figure 51-18. Example of a suction line sizing chart. The sizes in this chart are specific to a single refrigerant (R-410A) and a certain temperature range.

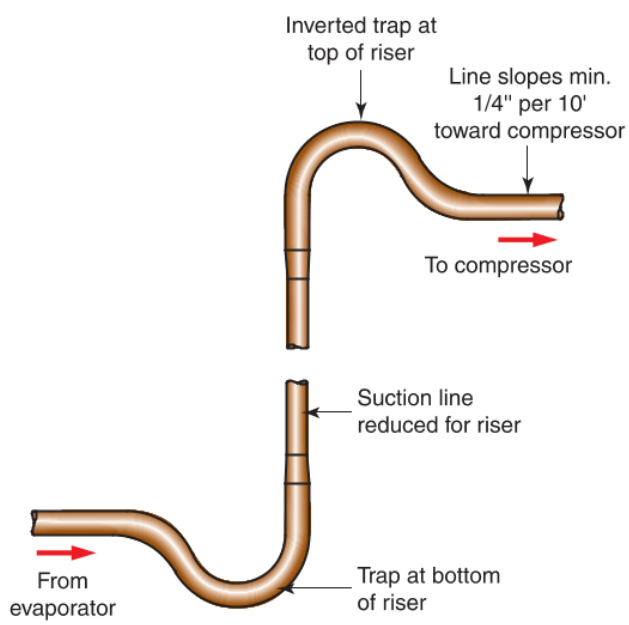

Goodheart-Willcox Publisher

Figure 51-19. Suction line risers have a smaller diameter than horizontal runs to maintain the required refrigerant velocity for oil return.

Copyright Goodheart-Willcox Co., Inc.

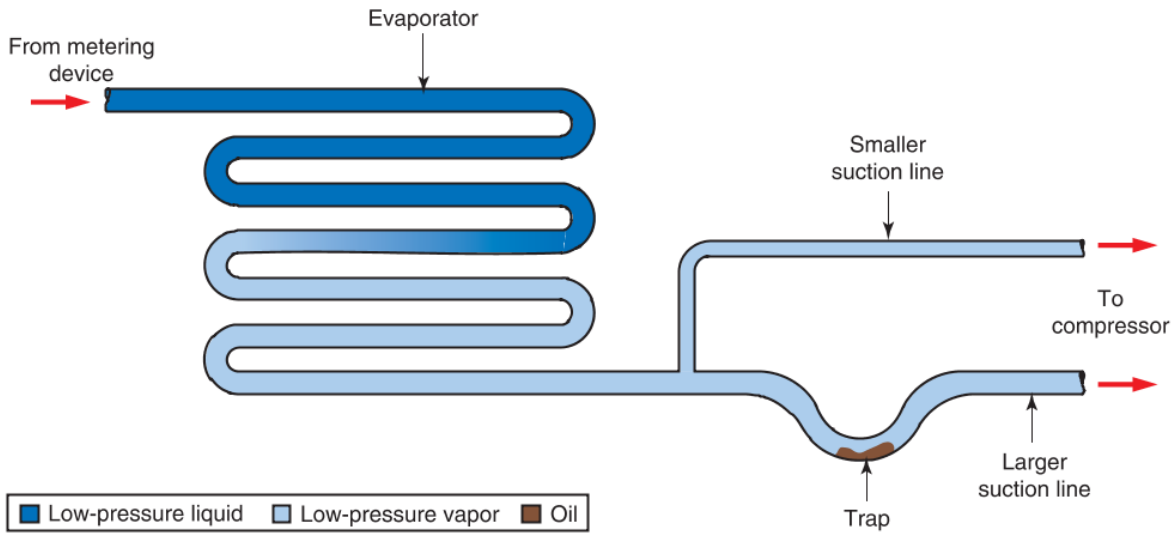

Goodheart-Willcox Publisher

Figure 51-20. A double suction line used in a modulating refrigeration system to prevent high pressure drop or low refrigerant velocity.

As the load decreases and the compressor capacity is reduced (or one compressor stops pumping in a multiple-compressor system), the vapor velocity slows. The oil trap in the larger suction line fills with oil, preventing refrigerant from flowing through that line.

As a result, the refrigerant vapor flows through the smaller suction line, which should be sized to provide adequate velocity to carry oil back to the compressor under light load conditions. When the system returns to operating at full capacity, the increased vapor velocity pushes the oil in the larger suction line back to the compressor, allowing refrigerant to flow through both suction lines again.

51.3.7 Compressor Discharge Line

The compressor discharge line carries high-pressure vapor refrigerant from the compressor outlet to the condenser inlet. This line is also called the hot gas line. A hot-gas bypass line may also be connected to the compressor discharge line. The hot-gas bypass line connects the compressor discharge line to the suction line or the evaporator (if for defrosting). High-temperature refrigerant vapor from the discharge line is fed into the evaporator through the hot-gas bypass line to defrost the evaporator. Hot gas can also be fed into the suction line for low-load capacity control.

Refrigerant velocities in the compressor discharge line are similar to the velocities in the suction line. Velocities of 500 fpm to 700 fpm in horizontal runs and 1,000 fpm to 1,500 fpm in risers are common. Refrigerant velocity in the hot-gas bypass line is generally greater, in the range of 1,000 fpm to 2,000 fpm.

Pressure drop is generally not a primary concern in the compressor discharge line. However, maintaining a 2°F maximum pressure drop is still recommended. An example of a chart used for selecting compressor discharge size is shown in **Figure 51-21**.

When compressor discharge vapor is piped to a remote condenser, the condenser may become warmer than the compressor during the Off cycle. When this happens, the temperature difference can create a pressure difference that causes refrigerant vapor to move

Compressor Discharge Line Sizes (R-410A)			
System Capacity		Equivalent Line Length (ft)	
Btu/hr	Tons/hr	25	50
18,000	1.5	1/2	1/2
30,000	2.5	1/2	5/8
42,000	3.5	5/8	5/8
60,000	5.0	3/4	3/4
120,000	10.0	7/8	1 1/8
240,000	20.0	1 1/8	1 3/8
420,000	35.0	1 3/8	1 5/8
600,000	50.0	1 5/8	1 5/8

Goodheart-Willcox Publisher

Figure 51-21. Example of a compressor discharge line sizing chart. The sizes in the chart are valid only for the refrigerant listed.

Copyright Goodheart-Willcox Co., Inc.

back from the condenser and condense in the head of a reciprocating compressor.

If the compressor discharge valves leak, liquid refrigerant will collect in the cylinders. This could cause the compressor to pump liquid refrigerant on start-up, which would reduce lubrication of the pistons and valves and could even break them. If the compressor valves do not leak, the collection of liquid refrigerant in the cylinder head may still cause damage when the compressor starts up. This is due to the dynamic hydraulic pressure on the compressor head and piping.

A primary concern of compressor discharge line design and installation is ensuring that liquid refrigerant and oil do not flow back into the compressor during the Off cycle. The compressor discharge line should be sloped toward the condenser a minimum of 1/4″ per 10′ of run. This slope ensures that any liquid in the line will flow away from the compressor. In some systems, a check valve is installed in the discharge line near the condenser to protect the compressor by preventing Off-cycle backflow.

Discharge lines rising from compressors to remote condensers must also have an oil trap. The trap keeps oil from returning by gravity to fill the space above the discharge valves of the compressor during the Off cycle.

Some systems include an oil separator in the compressor discharge line. An oil separator removes much of the oil from the vapor refrigerant. The collected oil flows back into the compressor crankcase. Oil separators are commonly used when the compressor discharge line includes a riser. See **Figure 51-22**.

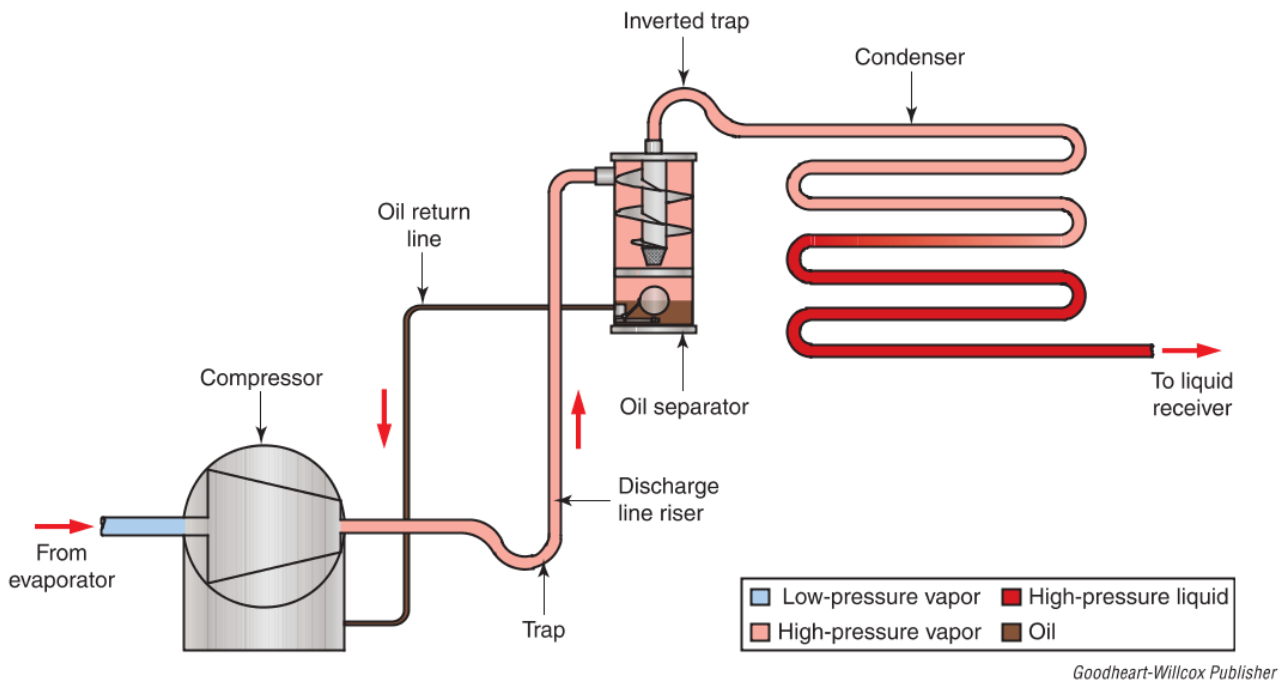

Figure 51-22. An oil separator installed in a compressor discharge line riser separates oil from vapor refrigerant. Oil flows back to the compressor crankcase through the oil return line.

Copyright Goodheart-Willcox Co., Inc.

Chapter Review

Summary

- A commercial refrigeration system's total heat load determines how much cooling capacity the system must have. The compressor's capacity must be sufficient to move enough refrigerant through the system to remove the total heat load within its operating cycle.
- A compressor's operating cycle is the number of hours that it operates per day. The operating cycle is partly based on evaporator defrosting requirements. Once the operating cycle is determined, the compressor's required capacity can be calculated by dividing the total heat load (Btu/day) by the operating cycle (hr/day).
- Factors that affect compressor sizing include suction line temperature, condensing temperature, and the relative humidity of the conditioned space. The relative humidity is selected based on the product being refrigerated. After calculating the suction line temperature and condensing temperature, a technician uses tables from compressor manufacturers to find a compressor with the right capacity.
- A condenser is sized based on the total heat of rejection (THR). THR comprises the total heat load for the system and the energy added to the refrigerant by the compressor. Once the THR is estimated, the condenser is selected based on capacities provided in manufacturer tables.
- Manufacturer tables are used to match the capacity of the evaporator to the capacity of the compressor. Factors that affect heat transfer in both the evaporator and condenser include surface area and temperature difference (TD).
- A compressor's theoretical volume is calculated by multiplying the surface area of the piston head ($\pi D^2/4$) by the length of stroke, number of cylinders, and revolutions per minute. A compressor's volumetric efficiency is the actual volume of vapor pumped divided by the theoretical volume and multiplied by 100 to obtain a percentage.
- The basic criteria that must be considered when sizing refrigerant lines are pressure drop, refrigerant velocity, and oil circulation. Pressure drop is affected by refrigerant line diameter, line length, and fittings. A line's total equivalent length is the length of the line itself plus the equivalent length for each fitting and valve in the line.
- The type of refrigerant line determines which sizing criteria are more important. In the condenser condensate line and liquid line, minimizing pressure drop is the most important factor because excessive pressure drop causes flash gas formation. In the suction line, refrigerant velocity is the most important factor because the proper velocity is critical to ensuring that oil is returned to the compressor.

Review Questions

Answer the following questions using the information in this chapter.

1. Total heat load represents the amount of heat that a commercial refrigeration system must remove in a _____ period.
   A. 1-hour
   B. 6-hour
   C. 12-hour
   D. 24-hour
2. Once the relative humidity of a conditioned space is selected based on the product being refrigerated, the _____ can be determined.
   A. condensing temperature
   B. temperature difference
   C. theoretical compressor volume
   D. volumetric efficiency
3. If a commercial refrigeration system's total heat load is 200,000 Btu/day and its operating cycle is 18 hours, what is the required compressor capacity in tons?
   A. 0.93 tons
   B. 16.7 tons
   C. 300 tons
   D. 11,111 tons
4. What is the condensing temperature of an air-cooled condenser with a TD of 25°F (14°C) and an ambient temperature of 85°F (29°C)?
   A. 60°F (16°C)
   B. 100°F (38°C)
   C. 110°F (43°C)
   D. 120°F (49°C)
5. If a hermetic compressor has a capacity of 18,000 Btu/hr, what is the estimated total heat of rejection (THR)?
   A. 13,846 Btu/hr
   B. 14,400 Btu/hr
   C. 22,500 Btu/hr
   D. 23,400 Btu/hr

Copyright Goodheart-Willcox Co., Inc.

6. Which of the following factors affects an evaporator's ability to absorb heat?
   A. Surface area
   B. Thickness of material
   C. Temperature difference (TD)
   D. All of the above.
7. The heat transfer rate for a forced-draft evaporator is approximately _____.
   A. 3 Btu/hr·ft^2·°F
   B. 8 Btu/hr·ft^2·°F
   C. 15 Btu/hr·ft^2·°F
   D. 25 Btu/hr·ft^2·°F
8. Liquid receivers should be 15% larger than the system's _____.
   A. accumulator volume
   B. condenser volume
   C. evaporator volume
   D. total liquid volume
9. What is the theoretical compressor volume in cubic feet per minute of a four-cylinder compressor with a 3″ bore, a 2″ stroke, and a speed of 1,200 rpm?
   A. 39.26 ft^3/min
   B. 42.39 ft^3/min
   C. 69.80 ft^3/min
   D. 67,824 ft^3/min
10. As high-side pressure increases, volumetric efficiency _____.
    A. decreases
    B. doubles
    C. increases
    D. stays the same
11. For most refrigerant lines, the maximum allowable pressure drop is equal to a saturation temperature drop of _____.
    A. 2°F (1°C)
    B. 4°F (2°C)
    C. 6°F (3°C)
    D. 8°F (4°C)
12. The required minimum velocity for a refrigerant line depends on the _____.
    A. line size
    B. type of refrigerant
    C. temperature of the refrigerant
    D. All of the above.
13. The refrigerant velocity in the liquid line is typically _____.
    A. less than 100 fpm
    B. between 100 fpm and 300 fpm
    C. between 300 fpm and 500 fpm
    D. greater than 500 fpm
14. If a suction line has any vertical risers, a(n) _____ should be installed at the base of each riser.
    A. double suction line
    B. filter-drier
    C. oil separator
    D. trap
15. The compressor discharge line should slope toward the condenser a minimum of _____ per 10′.
    A. 1/4″
    B. 1/2″
    C. 6″
    D. 12″

Copyright Goodheart-Willcox Co., Inc.

CHAPTER 52 Installing Commercial Systems

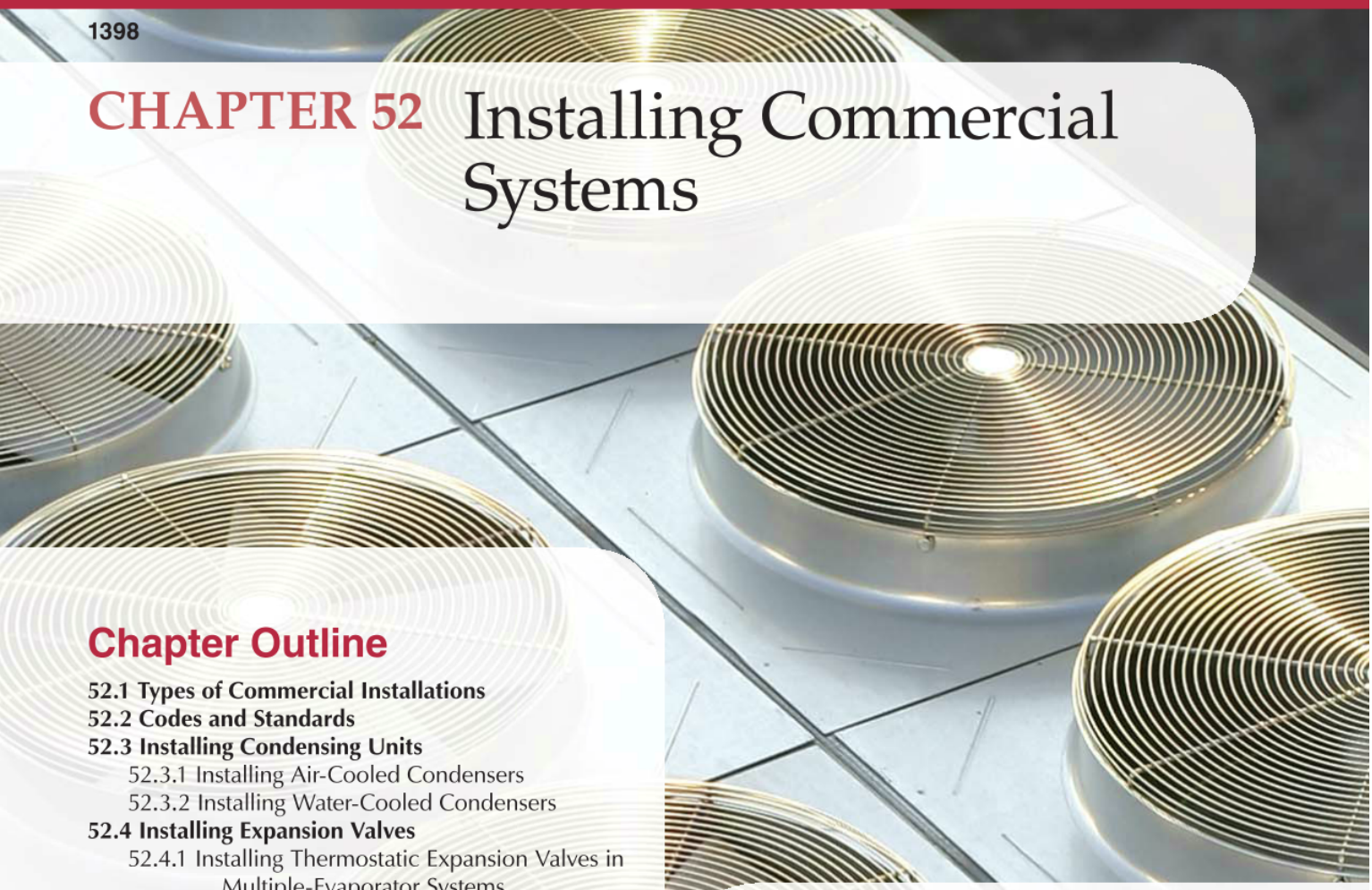

Chapter Outline

52.1 Types of Commercial Installations
52.2 Codes and Standards
52.3 Installing Condensing Units
52.3.1 Installing Air-Cooled Condensers
52.3.2 Installing Water-Cooled Condensers
52.4 Installing Expansion Valves
52.4.1 Installing Thermostatic Expansion Valves in Multiple-Evaporator Systems
52.4.2 Installing Thermostatic Expansion Valve Sensing Bulbs
52.5 Installing Evaporators
52.5.1 Evaporator Mounting
52.5.2 Installing Evaporator Condensate Tubing
52.5.3 Installing Evaporator Pressure Regulators
52.6 Installing Refrigerant Lines
52.6.1 Installing Refrigerant Lines in Multiple-Evaporator Systems
52.6.2 Installing Valves
52.6.3 Installing Vibration Absorbers
52.6.4 Installing Filter-Driers
52.6.5 Installing Sight Glasses
52.7 Installing Electric Motors
52.7.1 Installing Open-Drive Compressor Motors
52.7.2 Installing Hermetic Compressors
52.8 Testing Installations
52.9 Charging Commercial Systems
52.9.1 Low-Side System Charging
52.9.2 High-Side System Charging
52.10 Starting a Commercial Refrigeration System
52.10.1 Starting a Multiple-Evaporator System Using Shutoff Valves
52.10.2 Starting a Multiple-Evaporator System by Throttling the Suction Service Valve

Learning Objectives

Information in this chapter will enable you to:

- Summarize some of the basic regulations found in most codes.
- Identify procedures for locating and mounting condensing units and evaporators.
- Determine where to mount thermostatic expansion valve sensing bulbs based on suction line tubing size.
- Install various components, such as valves, filter-driers, and sight glasses, along refrigerant lines.
- Properly mount and install open-drive compressor motors and also hermetic compressors.
- Test a refrigeration installation for leaks by using leak detection devices, a standing pressure test, and a standing vacuum test.
- Charge a system with refrigerant using either the low-side method or the high-side method.
- Start a multiple-evaporator system under a full heat load without overloading the compressor.

Technical Terms

galvanic action
high-side charging
low-side charging

Review of Key Concepts

Reviewing these concepts from earlier chapters will help you understand new concepts presented in this chapter:

- There are two basic types of commercial systems: packaged and split. Packaged systems arrive ready for installation fully wired, charged, and tested. The components of split systems are purchased separately and assembled at the jobsite. (Chapter 49)
- Motor specifications (such as rated voltage, full-load amperage, frequency, and phase) can be found on the motor nameplate, which is mounted on the outside of the motor frame. (Chapter 15)
- There are two primary methods for pressurizing a refrigeration system to test for leaks. One method involves charging the system with an inert gas. The second method, used if the leak cannot be found with just an inert gas, involves evacuating the system and charging it with an inert gas and a trace amount of the system's specified refrigerant. (Chapter 11)
- Refrigerant can be charged into a system in either vapor or liquid form. Liquid charging is quicker, but it presents some serious risks because liquid refrigerant can cause slugging in the compressor. (Chapter 11)
- A pressure motor control is used to regulate the compressor motor based on pressure in the evaporator. It is mounted on the suction side of the compressor to monitor evaporator suction pressure. (Chapter 16)
- A hot pull down is when a system cycles on with the conditioned space temperature being pulled down to normal operating temperature from much higher starting temperature (generally ambient temperature). A refrigeration system needs time for the compressor to remove the bulk of the heat load and drop temperature and pressure to normal levels. (Chapter 19)

Introduction

Installing commercial refrigeration equipment is a major part of the HVACR industry. Regulating bodies and authorities inspect and examine installations for proper workmanship, safety concerns, and code-required practices. Commercial installation codes are very strict to ensure the safety of the building occupants at all times. Improper installations can lead to equipment failure, which can result in companies losing valuable work time and refrigerated or frozen products.

Video

- Pressure and Vacuum Testing

52.1 Types of Commercial Installations

Commercial refrigeration installations vary considerably—from a small refrigerated vending machine found in a convenience store to multiple refrigerated display cases found in a large grocery store. Installations are broadly classified in one of two groups: packaged systems and split systems. Sometimes split systems are referred to as field-erected systems. Split systems can have a single refrigerated cabinet or multiple cabinets at different temperatures.

Commercial refrigeration systems must be installed properly to handle the refrigeration load efficiently. Always take into consideration the products being refrigerated and the duty cycle of the system. Although some jobs may simply be the installation of a replacement cooler or a new refrigerated display case, a technician should make sure that the location of the new unit is correct and that the new unit is large enough to handle the heat load.

Commercial operations, such as restaurants and grocers, often change the layout of their refrigerated space without considering if the old system can satisfy the demand of the new layout. For example, a heat source, such as a stove or range, may have been installed next to the condensing unit. Walls may have been added that restrict condenser airflow, or a window may have been installed directly in front of a refrigerated display case, resulting in an increased solar load.

An installation must also be done in such a way as to eliminate hazardous conditions that might lead to accidents. Electrical conduit and refrigerant lines should be routed to ensure they are not damaged by employees moving stock. Condensate drain lines must be secure and leakproof to prevent tripping hazards. Two guiding principles of installation are durability and neatness, which help to minimize future dangers.

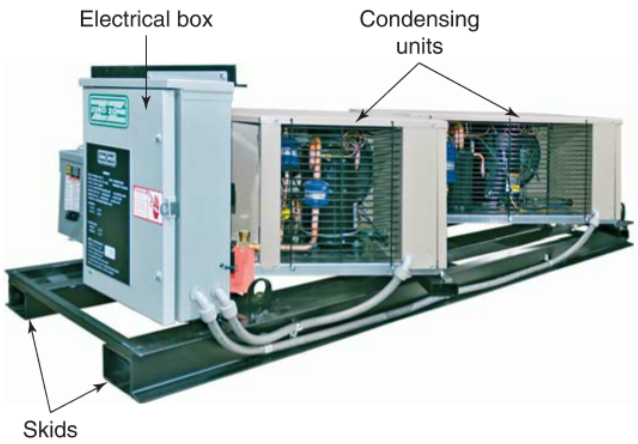

Zero Zone, Inc.

Figure 52-1. Some commercial refrigeration condensing units come mounted on skids, making it easier to move them to the installation location.

Commercial Refrigeration Installations

Commercial refrigeration installations typically progress in the following order:

1. Position and secure the refrigerated cabinets. Heavy and large pieces of equipment may be delivered by truck to the jobsite, **Figure 52-1**. Dollies or other moving devices may be needed to locate the equipment.
2. Identify the best place for the condensing unit and install it.
3. Install the evaporators in the refrigerated cabinets.
4. Install all the valves and controls.
5. Install refrigerant lines and any other tubing, such as condensate drain lines.
6. Pressurize the system with dry nitrogen and check for leaks using a bubble solution or an ultrasonic leak detector.
7. If no leak is found, perform a standing pressure test by leaving the nitrogen under pressure in the system for 24 hours. If the pressure in the system drops, the system has a leak.
8. If the leak cannot be found with a bubble solution or an ultrasonic leak detector, evacuate the system and charge it with a small amount of refrigerant (to 10 psig) and then finish pressurizing the system with nitrogen.
9. Leak test using an electronic leak detector. Once the leak is found, vent the refrigerant-nitrogen mixture and evacuate the system. (This venting is allowed per EPA Section 608 regulations.)
10. Repair the leak and then pressurize the system with dry nitrogen to check for leaks again.
11. If the system is free of leaks, evacuate it to the proper level before charging it with refrigerant.
12. Start the system.
13. Check the operation of the system and get a 24-hour temperature and pressure record of the system in operation.

Copyright Goodheart-Willcox Co., Inc.

52.2 Codes and Standards

Most refrigeration equipment manufacturers provide guidelines for installing their equipment. Furthermore, many municipalities have laws and codes covering the installation of certain refrigeration systems. Domestic systems and some other small-capacity, self-contained systems are usually not included. This is because these systems are inspected and certified by the manufacturer prior to shipping to the customer. Some cities and rural communities, however, are not restricted by any codes. Where there is no local code, the code of the nearest city should be followed.

Compared to domestic systems, commercial refrigeration systems typically require a significant amount of custom work when delivered to the jobsite. For instance, the condensing unit may be mounted on the roof or placed in a remote area of the building. In addition, refrigerant lines need to be run between the condensing unit and the evaporator unit, and electrical connections need to be made to power and control the units. The system then needs to be charged with refrigerant and tested for proper operation. Codes help ensure uniform performance and safe installations. Codes also protect the customer from careless installations.

The local codes in most cities, towns, or counties are established to ensure conformity to national codes and standards. Local codes regarding commercial refrigeration installations are typically adopted from the standards developed by the American Society of Heating, Refrigerating and Air-Conditioning Engineers (ASHRAE). In addition, nearly all local codes adopt the National Electrical Code® (NEC), which is applicable to the installation of any wiring and electrical equipment for a commercial refrigeration system. Other codes often referenced include the International Mechanical Code (IMC) and the International Plumbing Code (IPC) for systems using water.

In many instances, municipalities adopt only some international codes and ASHRAE standards or modify them based on local conditions. For example, a county in California may establish a code requiring specific mounting of refrigerant lines to protect against earthquakes, which is not applicable in Florida.

An HVACR technician must be knowledgeable of all applicable national and local codes. The following are some points found in most codes:

- Only licensed refrigeration contractors may install commercial equipment.
- A permit must be obtained for each installation.
- Each installation must be inspected by local authorities.
- Lines must be labeled to identify the refrigerant used.
- Certain safety devices must be installed in the system.
- The condensing unit must be installed in a safe place.
- Electrical and plumbing work must conform to code and be done by licensed electricians and plumbers.
- Systems must be tested under pressure on both the high side and the low side and be free of leaks.

Codes should be carefully followed in order to ensure safety for the installer, owner, user, and public. Most municipalities require that permits be obtained before an installation can be made. They may also require that the company performing work show proof of insurance prior to granting a permit to work on a job. A code enforcement officer issues the permit prior to the installation and conducts an inspection upon completion of the job.

Oftentimes, a permit is also needed before performing a major service operation on a commercial system. Specifications of the proposed job must be presented, and permits are not issued unless the specifications presented meet code requirements. Failure to secure proper permits and inspections for an installation may result in fines and possible loss of the technician's license.

52.3 Installing Condensing Units

The first step in installing a condensing unit is determining where it should be placed. Ideally, the condensing unit is located as close to the conditioned space as possible. A central location is best, such as in a basement or on the roof, just above the conditioned space. The condensing unit may also be placed in a separate, well-ventilated room next to the room containing the conditioned space. If possible, avoid placing the condensing unit where it can be exposed to heat sources (such as near steam pipes, hot air grilles, and in the sun) or to low or freezing temperatures. Locating a condensing unit in the same room as the conditioned space is not recommended because of the heat and noise produced by the condensing unit.

When placed indoors, the temperature of the room containing the condensing unit should be monitored during warm ambient conditions to ensure that the compressor does not overheat. A high ambient temperature produces higher head pressure and less efficient operation. Often, a fresh air intake must be installed to obtain optimum

Copyright Goodheart-Willcox Co., Inc.

room temperature in a condensing unit room. This intake also permits refrigerant to escape to outdoors in case the unit develops a leak. If the room has no ventilation, refrigerant accumulation can create a life-threatening hazard by displacing oxygen in the room. Screens should be secured over any ventilation openings to prevent insects, rodents, and other objects from entering.

Running compressors may produce some vibration. **Figure 52-2** shows two common types of compressor mounting grommets used to absorb vibrations. Condensing units must be electrically grounded, and there should be proper floor drainage in the event of a flood. A technician should also install a valve and accessory board on a wall just above the condensing unit. This board can be used

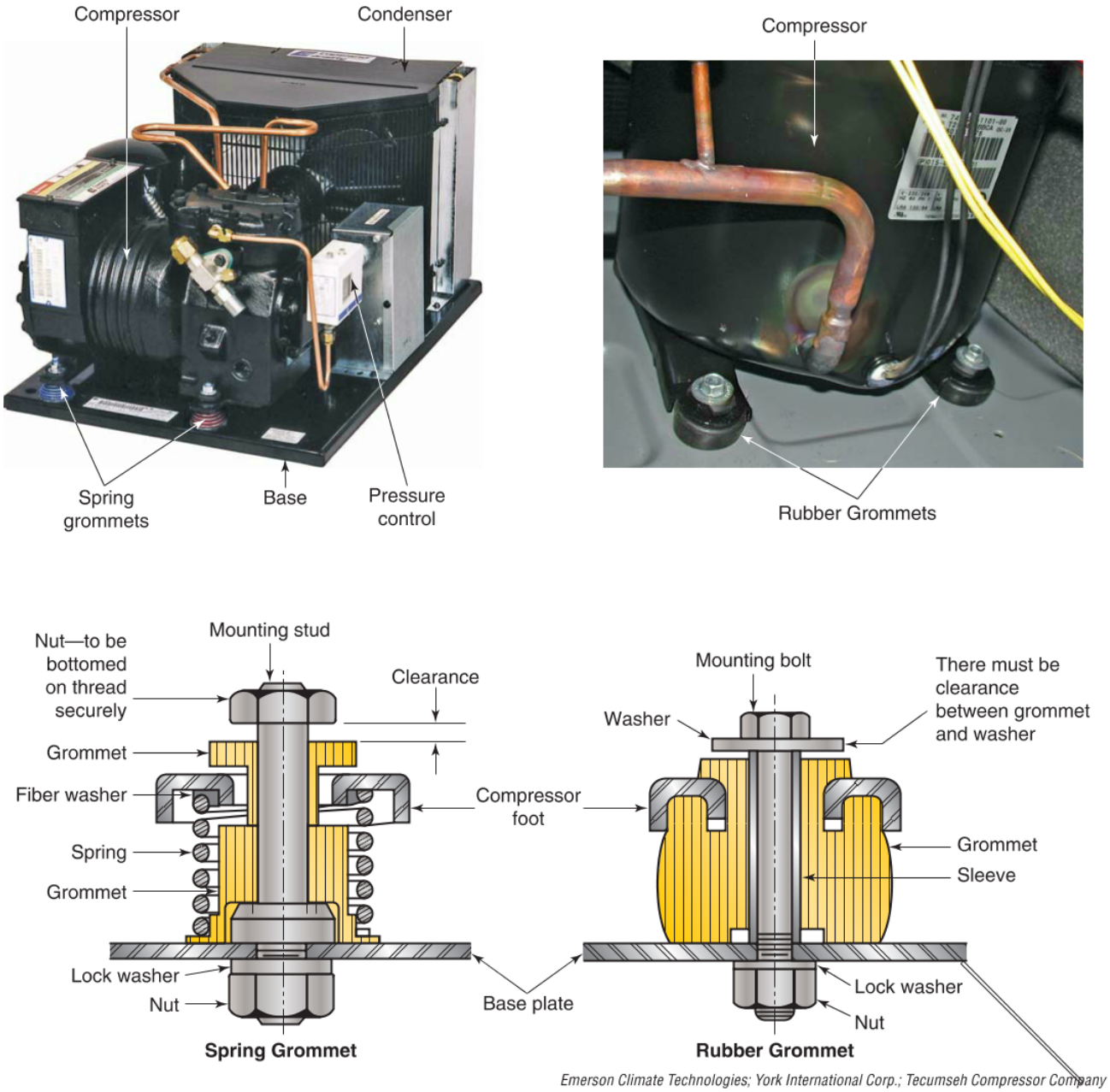

Emerson Climate Technologies; York International Corp.; Tecumseh Compressor Company

Figure 52-2. Both rubber grommets and spring grommets physically isolate the compressor from the rest of the condensing unit, preventing vibrations from being transferred to other system components.

Copyright Goodheart-Willcox Co., Inc.

to mount valves, filter-driers, motor controls, electrical boxes, and service instruction cards.

If required, a protective cage should be placed around condensing units. The cage ensures that only service technicians have access to the condensing equipment. It also establishes a safe area around the condensing unit so that regular employees cannot come in contact with the unit. Larger units must also be protected from fire damage with fire-resistant, self-closing doors. Locks should be placed on all doors to a condensing unit room, and instructions for proper entry should be posted near the lock.

In some cases, a system's condensing unit is installed away from the compressor. In these instances, traps are used in the compressor discharge line. The traps keep the oil in the condenser and away from the compressor's discharge valve, **Figure 52-3**. Discharge lines should also be slanted downward away from the compressor and toward the condenser.

Most municipal codes include restrictions on the condensing unit's noise level and requirements for placing the condensing unit a certain distance from property lines. Some 1 hp to 5 hp condensing units can be converted from indoor to outdoor installations by adding a shroud from the manufacturer. These condensing units can be used with most coolers and freezers regardless of the refrigerated cabinet's location. Conversion for outside installation may also require the addition of crankcase heaters and insulation for cold climates.

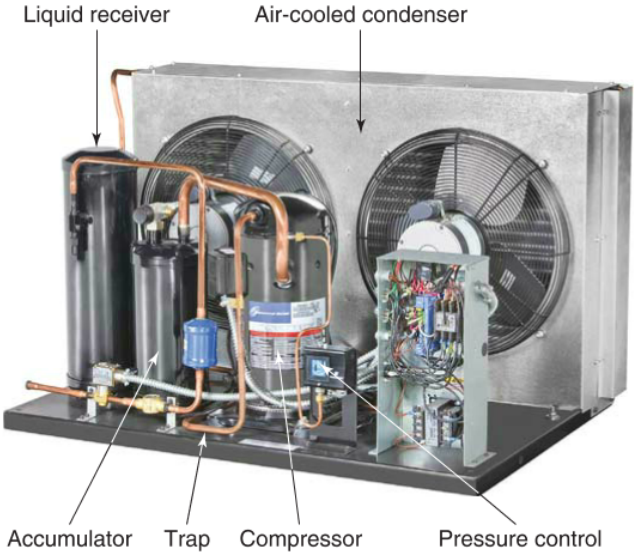

Emerson Climate Technologies

Figure 52-3. Even though the compressor and condenser are mounted together on this condensing unit, a trap is used to prevent oil from flowing backward into the compressor.

To prevent damage to the condensing unit or an explosion due to excessive pressure, most codes require the installation of the following safety devices:

- Pressure control—stops compressor motor operation under excessively high pressure.
- Spring-loaded relief valve or rupture disc—dissipates refrigerant under excessively high pressure.
- Fusible plug—used where the unit may become overheated due to fire.

All refrigerant lines should have labels identifying the refrigerant in the system. Install the condensing unit so that all parts are accessible for maintenance and service. Water lines connected to a condensing unit are either soft copper tubing or flexible plastic pipe. Allow enough piping to permit some movement of the condensing unit.

New condensing units use shipping blocks to protect various components during transport. The shipping blocks must be removed before the unit can be installed. Spin any fan or other moving parts by hand to make sure they can move freely prior to turning on.

52.3.1 Installing Air-Cooled Condensers

When installing air-cooled condensers, always protect the condenser fins and condenser tubing, including return bends. Mount the condenser securely in its frame and install it as level as possible. Connect the condenser to the compressor and the liquid receiver, if used.

Flared fittings should be carefully aligned, so they are not under tension or forced in any way. If the fittings are out of line or under strain, the threads on the fittings or the flare may be damaged. Brazed connections must also be carefully aligned before brazing.

Before assembling a brazed connection, a technician should clean the surface to be brazed using a wire brush, clean steel wool, or dry sandpaper. Flux should be put on the outside of the male part only. The joint should be supported during the brazing operation. For instructions on brazing, see Chapter 8, *Working with Tubing and Piping*. Use metal sheets as shields to protect other parts of the condensing unit by blocking them from the brazing flame.

52.3.2 Installing Water-Cooled Condensers

Installation of a water-cooled condenser is similar to installation of an air-cooled unit. The condenser mounting and joint brazing should be done with the same care. All parts should be cleaned before

Copyright Goodheart-Willcox Co., Inc.

assembly. Be sure to test the water lines for leaks after the unit has run for a few hours to permit the condensing temperature to reach its peak. Check that the water flow is sufficient to effectively cool the condenser. Closely monitor the head pressure to make sure the unit is operating within the manufacturer's specifications.

Code Alert

Water Connections

Article 1101.4 of the International Mechanical Code (IMC) states that any water supply and discharge connections associated with a refrigeration system must made in accordance with the International Plumbing Code (IPC).

52.4 Installing Expansion Valves

In commercial refrigeration installations, expansion valves are often attached to an evaporator using brazed or flared connections. The flare nut in such an installation must be sealed from moisture. Sealing is done after the installation is made and before the system starts to operate.

If a flare nut is not sealed, ice may form between the nut and the tubing. See **Figure 52-4**. In a short time, ice can cause the tube to collapse or break. This condition can also occur where the suction line fastens to the evaporator. Other methods, such as a rubber seal at the end of the flare nut, have also been devised to stop moisture from collecting between the nut and the tubing.

Although the best type of connection is a brazed connection, it may not be possible to fit a torch into all areas to be brazed, or brazing may cause adjacent components to overheat and malfunction. Flared connections are used primarily where access to the evaporator and expansion valve is limited. Short-shank flare nuts should be used in places where frosting occurs.

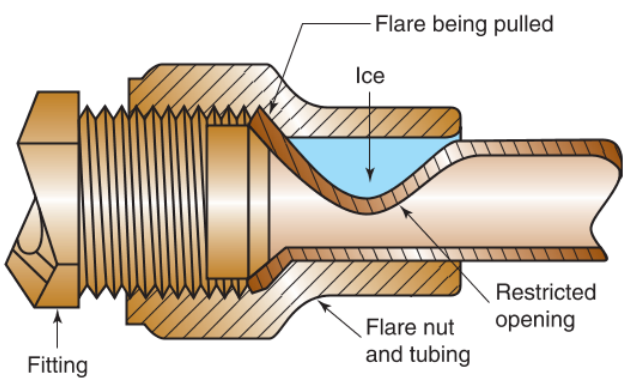

Goodheart-Willcox Publisher

Figure 52-4. Ice formation between the flare nut and tubing pinches the tubing and restricts the flow of refrigerant.

52.4.1 Installing Thermostatic Expansion Valves in Multiple-Evaporator Systems

In multiple-evaporator systems, install thermostatic expansion valves (TXVs) along with individual solenoid valves in the liquid lines to each evaporator. The solenoid valves allow each evaporator to be isolated from the rest of the system. When demand for a specific evaporator is low, the solenoid valve closes to stop refrigerant flow to that evaporator.

The compressor is then required to provide refrigerant only to the other operating evaporators. In a system with a variable capacity compressor, the compressor may use an unloader to reduce its capacity when the heat load is low. This permits a single condensing unit to efficiently serve numerous evaporators that may be operated at various temperatures. Other methods of modulating refrigeration capacity are available.

Although adjustments to the TXVs can make slight changes to an evaporator's temperature, evaporator pressure regulators (EPRs) are installed to maintain temperature differences between evaporators. The evaporator operating at the lowest temperature does not have an EPR, but evaporators operating at higher temperatures do. The EPR closes when pressure in the suction line drops below a set level, maintain a higher pressure (and thus, temperature) in the evaporator.

52.4.2 Installing Thermostatic Expansion Valve Sensing Bulbs

The location and attachment of a TXV's sensing bulb onto a suction line influences how the sensing bulb senses the refrigerant. How a sensing bulb senses refrigerant affects how a TXV adjusts refrigerant flow from the liquid line into the evaporator. Proper sensing bulb placement is necessary for proper TXV operation. A misplaced or poorly positioned sensing bulb can cause a TXV to respond incorrectly and result in an evaporator with the wrong temperature.

The location and position of a TXV sensing bulb on the suction line depends on the tubing size. The best way of determining where to mount sensing bulbs is to imagine looking head-on at a horizontal run of suction line tubing at eye level. Next, imagine the face of a clock inside the tubing. Based on the size of the suction line tubing, sensing bulbs are mounted at positions aligning with different hour hand positions, **Figure 52-5**.

Copyright Goodheart-Willcox Co., Inc.

Mounting TXV Sensing Bulbs		
Tubing Size	Sensing Bulb Position	
< 3/4"	Eleven o'clock	One o'clock
3/4"–7/8"	Ten o'clock	Two o'clock
> 7/8"	Eight o'clock	Four o'clock

Goodheart-Willcox Publisher

Figure 52-5. For tubing smaller than 3/4″, sensing bulbs are mounted at eleven o'clock or one o'clock. For tubing between 3/4″ and 7/8″, sensing bulbs are mounted at ten o'clock or two o'clock. For tubing over 7/8″, sensing bulbs are mounted at eight o'clock or four o'clock.

Pro Tip

Sensing Bulb Placement

Never mount a sensing bulb on the bottom of a tube or near a bend or turn of tubing. Collected oil at the bottom of the tubing may cause the sensing bulb to function incorrectly. Always clean the part of the suction line tubing where the sensing bulb is being placed by using a fine grit emery cloth. Make sure the entire length of the sensing bulb is in contact with the tubing.

Sensing bulb mounting straps should be made of some type of material that conducts heat well, so heat will be transferred across the surface of the entire sensing bulb and not just the part that is in direct contact with the tubing. The sensing bulb needs to react to the refrigerant in the system and not to hot or cold ambient air.

In many cases, ambient air may offset the reaction of a sensing bulb. To avoid this problem, wrap the sensing bulb in self-adhesive elastomeric foam tape. In areas where the ambient air may dip below freezing, the foam tape prevents ice or frost from forming between the sensing bulb and the tubing. Any ice or frost can insulate the sensing bulb from the tubing, inhibiting heat transfer and further offsetting the reaction of the TXV.

Caution

Sensing Bulb Mounting Straps

Do not use plastic straps to mount a sensing bulb to tubing. The temperature changes and wear will eventually break the straps. Using the proper strap will avoid needless system downtime and service calls.

52.5 Installing Evaporators

Evaporators for commercial refrigeration systems should be carefully mounted, delicately leveled, and firmly fastened. HVACR technicians should know the principles of air circulation and the proper direction of evaporator airflow. For more information on evaporators and their airflow, see Chapter 21, *Heat Exchangers* and Chapter 47, *Overview of Commercial Refrigeration Systems*.

Pro Tip

Moving Cabinets

Refrigerated cabinets are bulky and sometimes difficult to handle. A dolly is handy for cabinet moving. Moving equipment may also be useful when moving condensing units.

52.5.1 Evaporator Mounting

Different evaporators use different mounting methods. Evaporators in refrigerated display cases are usually mounted on stands or brackets. These stands or brackets are adjustable to allow the technician to level the evaporator in all directions. Evaporators in florist cabinets and walk-in cabinets are typically fastened with hangers to the ceiling, **Figure 52-6**.

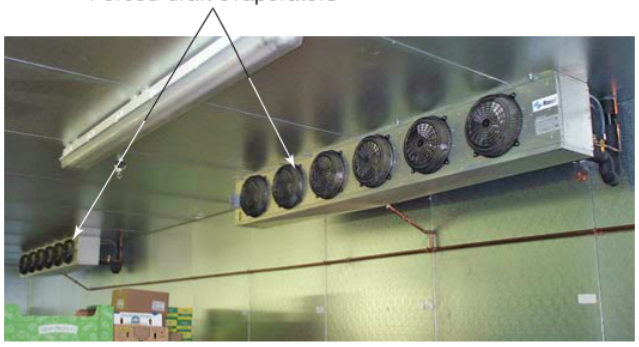

U.S. Cooler Company

Figure 52-6. Forced-draft evaporators mounted to the ceiling of a walk-in cabinet in a grocery store.

Copyright Goodheart-Willcox Co., Inc.

To attach the hangers to the ceiling of the cabinet, use a cardboard template and a plumb line to accurately align and mark the placement of the hangers. Hydraulic or pneumatic platforms can be used to lift the evaporator into place and hold it until it can be fastened. Each evaporator should be carefully checked after mounting to make sure it is level.

If an evaporator is mounted vertically, the evaporator outlet should always be below the inlet. This allows for proper oil return to the compressor. It also means that the coldest fins will be at the top where they contact the warmest air, which improves the rate of heat transfer. Sometimes, an evaporator is mounted horizontally. In either case, be mindful of how the TXV and sensing bulb are installed, **Figure 52-7**.

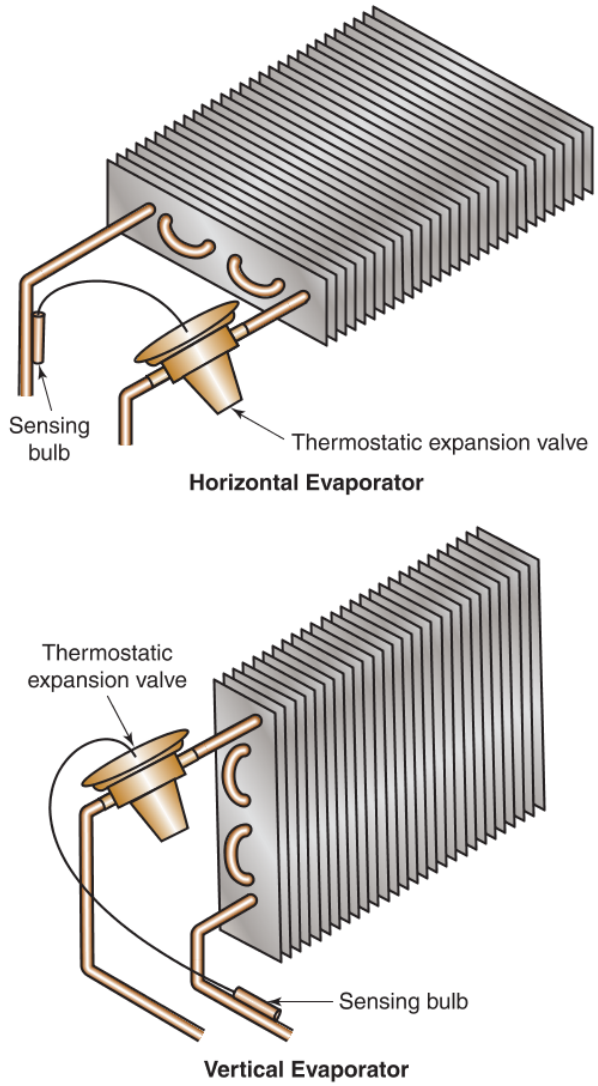

Goodheart-Willcox Publisher

Figure 52-7. Recommended expansion valve and sensing bulb mounting locations for two different evaporator installations.

Caution

Evaporator Grounding

Evaporators must be electrically grounded if they have a motor and fan.

52.5.2 Installing Evaporator Condensate Tubing

Commercial evaporators produce large amounts of condensate. Use straight tubing runs and tubing with an adequate diameter (as recommended by the manufacturer) to provide for sufficient condensate flow from the evaporator drain pan. Flexible plastic tubing may be used on low-volume condensate drains. Hard PVC is often used on larger commercial evaporators, which produce greater volumes of condensate flow, **Figure 52-8**.

52.5.3 Installing Evaporator Pressure Regulators

Evaporator pressure regulators (EPRs) should be installed at the outlets of warmer-temperature evaporators in multiple-evaporator systems. EPR operation is usually not affected by the distance from the evaporator. However, an EPR should be connected between an evaporator's outlet and the suction line manifold.

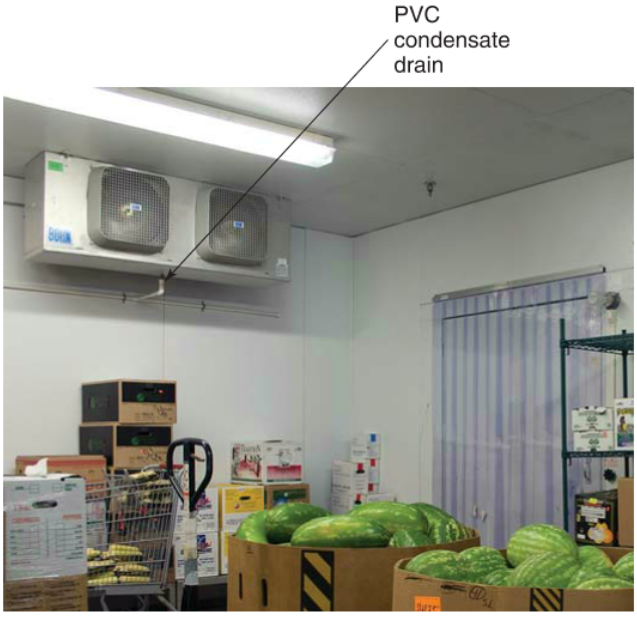

U.S. Cooler Company

Figure 52-8. A large forced-air evaporator with a PVC drain connection in a refrigerated grocery storage room.

Copyright Goodheart-Willcox Co., Inc.

A multiple-evaporator installation should also have a check valve, not an EPR, between the outlet of the coldest evaporator and the suction line. This prevents higher pressure gases from backflowing into the coldest evaporator during the Off cycle and warming it. Also, an accumulator should be mounted in or near the condensing unit between the main suction line and the compressor. This cuts down on low-side pressure fluctuations.

52.6 Installing Refrigerant Lines

For commercial refrigeration installations, most local codes require the refrigerant lines to be made of hard-drawn air conditioning and refrigeration (ACR) tubing. Hard-drawn ACR tubing is required to ensure that runs are straight and stable. Although soft ACR tubing is permissible at the condenser end of the lines, even these short lengths should be eliminated wherever possible. This reduces the potential for leaks since soft ACR tubing flexes at flared joints.

Hard-drawn ACR tubing used in commercial refrigeration is usually Type K (heavy wall) although Type L (medium wall) can be used in some applications. Some codes recommend a wall thickness of at least 0.065″ where the tubing is exposed. Hard-drawn ACR tubing comes in straight lengths of 10′ or 20′ rather than in coils. In smaller commercial installations, 1/4″ tubing is used for the liquid line, and 1/2″ tubing is used for the suction line. Larger commercial refrigeration systems may have lines as large as 6″. For more information on how to size refrigerant lines correctly, see Chapter 51, *Commercial Refrigeration Component Selection*.

Unlike soft ACR tubing, hard-drawn tubing is not pliable enough to be flared, which means joints must be brazed. Joints and fittings must be placed so that they can be easily inspected. Since leaks may result from poorly brazed joints, the brazing of hard-drawn ACR tubing joints must be expertly done. Always use the fluxes and brazing alloys recommended by the manufacturer. The surfaces to be joined should be clean, and the ends of the tubing should be cut square. This allows proper flow of the brazing alloy into the joint.

When installing a system, plan your work so that all connections are completed in one day. Leaving tubing exposed for long periods may introduce moisture and debris into the system. To keep unused tubing clean, place caps or plugs in the ends of the tubing to seal out dirt and moisture. Never put tubing aside with ends open unless it will be used immediately.

The appearance of an installation is important. Therefore, the tubing should be put in as neatly as possible with minimal bends and adequate supports for straight runs. Supports are used at intervals frequent enough to keep the tubing straight and to prevent the tubing from pinching or crimping. Being easily bent, soft ACR tubing must be supported by clamps or brackets every four to six feet. Hard-drawn tubing should be supported every six to eight feet.

Copper tubing clamps are used to support the tubing by fastening it to the building structure. Other clamps, such as galvanized electrical conduit clamps, can also be used in most situations. Tubing should be insulated or protected from these clamps with short wrappings of plastic tape, **Figure 52-9**. The tape helps to prevent chafing and galvanic action. ***Galvanic action*** is the corrosion of metal that occurs when two different metals are in contact in moist air.

Copper Tubing Clamp

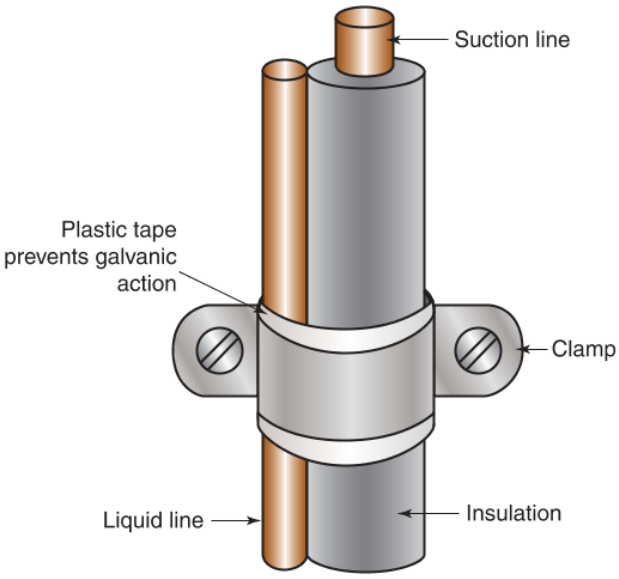

Galvanized Tubing Clamp

Mueller Refrigeration Company, Inc.; Goodheart-Willcox Publisher

Figure 52-9. Tubing clamps are used to fasten refrigerant tubing to walls and other flat surfaces for support. When using a galvanized conduit clamp, wrap plastic tape around the tubing before attaching the clamp to the wall with screws.

Copyright Goodheart-Willcox Co., Inc.

Code Alert

Refrigerant Piping Height Requirements

Article 1107.2 of the International Mechanical Code (IMC) states that refrigerant piping across an open space that provides passageway in a building must be at least 7′-3″ (2210 mm) above the floor, unless the piping is located against the ceiling.

Tubing installations are usually run along ceilings and walls. Many technicians use a rubber covering over the tubing that serves both as protection and as insulation. This covering must be placed on the tubing before assembly unless the insulation is split. When tubing must be run through a floor or wall, use short runs of conduit or flexible metal tubing (FMT) to protect the tubing. The ends of the conduit should be sealed on the outside with a sealing compound to prevent chafing and water intrusion.

Code Alert

Refrigerant Piping Penetrations

Article 1107.2.2 of the International Mechanical Code (IMC) prohibits the penetration of a building's floors, ceilings, and roofs by refrigerant piping. However, this article also lists the exceptions in which refrigerant piping penetration is allowed.

A system's suction line should be mounted with a slight slope toward the compressor. This slope allows oil to flow by gravity back to the compressor during the Off cycle. If the suction line has low spots, oil can accumulate and may eventually form a liquid slug in the tubing. Such a slug carried to the compressor can produce a disturbance in the crankcase and may cause temporary oil pumping. Suction lines that cannot be sloped may require the installation of an accumulator to ensure proper oil circulation to the compressor. The liquid line presents no difficulties regarding slope and position.

Pro Tip

Heat Sources and Refrigerant Tubing

Never run refrigerant tubing near sources of heat, such as hot-water lines, steam lines, or furnaces. The heat can reduce system efficiency by causing flash gas formation in the liquid line or condensation on the suction line.

Copper tubing normally comes with no special finish on the inside or the outside. This means the tubing will corrode if it is placed in contact with the ground, liquid, or air saturated with acid fumes or corrosive elements. If the refrigerant tubing must be installed in a harsh environment, tubing with a plastic coating may be used, **Figure 52-10**.

Code Alert

Prohibited Refrigerant Piping Locations

Article 1107.2 of the International Mechanical Code (IMC) states that refrigerant piping must not be installed in any elevator, dumbwaiter, or other shaft containing a moving object or any shaft with openings to living quarters or to a means of egress. Refrigerant piping cannot be installed in an enclosed public stairway, stair landing, or means of egress.

52.6.1 Installing Refrigerant Lines in Multiple-Evaporator Systems

There are two common methods of installing refrigerant lines for multiple-evaporator systems. In one method, there is a common liquid line and common suction line. The various evaporators in the system use T-fittings to tap into these common lines at the most convenient points.

In the other method, manifolds are used to bring the various lines to a centralized point. See **Figure 52-11**. Each line is connected through a shutoff valve to the manifolds. The suction line manifold connects the smaller suction lines from each evaporator to a single, larger suction line that runs to the compressor. The liquid line manifold, which may be located on a wall near the condensing unit, distributes refrigerant from a single liquid line to separate metering devices and their corresponding evaporators. This method, however, is not always practical, especially when one evaporator is isolated by a long distance because a duplication of long runs to and from each manifold is required.

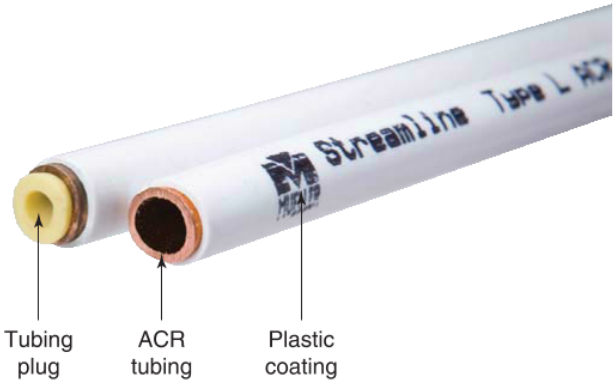

Mueller Refrigeration Company, Inc.

Figure 52-10. ACR tubing coated with protective plastic, which allows it to be buried or used in harsh environments.

Copyright Goodheart-Willcox Co., Inc.

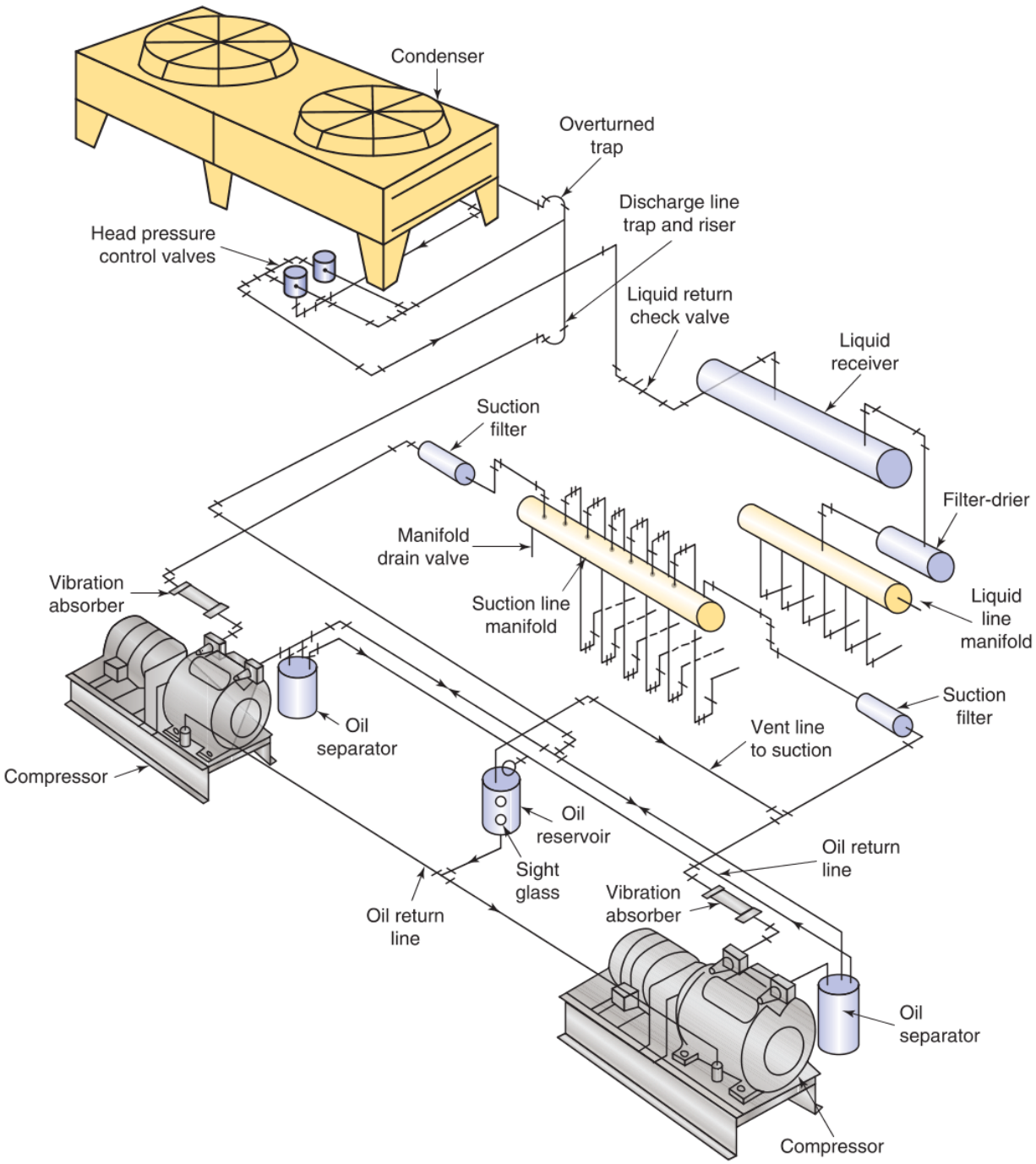

Dunham-Bush, Inc.

Figure 52-11. Isometric drawing showing the layout of refrigerant lines in a multiple-evaporator system with a suction line manifold and a liquid line manifold. Each manifold connects to six refrigerant lines.

Copyright Goodheart-Willcox Co., Inc.

Pro Tip

Reducing Pressure Drop

Each bend and valve placed in a refrigerant line increases the line's pressure drop. This is a result of the friction caused by the bend or valve. To keep pressure drop in refrigerant lines to a minimum, use as few bends and valves as possible.

52.6.2 Installing Valves

Most codes require large commercial systems to have shutoff valves so that parts of the system can be isolated from occupied areas in the event of a leak. These shutoff valves must be constructed so that anyone may shut them off. This means that there must not be any need for special tools to operate the valve. As a result, shutoff valves have handwheels, so they can be operated by hand. These valves are also provided with brackets so they can be firmly attached to a panel or wall.

Other valves installed in refrigerant lines, such as refrigerant line valves and service valves, are commonly covered with insulating tape or specially formed pieces of insulation. See **Figure 52-12**. The connections for most valves in commercial systems are brazed, except where soft copper is used and flared connections can be made. Valves, driers, and other heavy objects should not be supported only by the tubing. These components should be mounted on a wall or some other support.

Pro Tip

Brazing Valves

If possible, remove the inner parts of valves (such as the Schrader valve cores in service valves) while brazing them to refrigerant tubing. This protects the inner parts from excessive heat that can be transferred through the tubing during brazing. Another method for protecting against heat transfer involves wrapping the valve in a wet cloth to absorb the heat conducted by the tubing. However, do not allow moisture from the wet cloth to enter the valve.

Code Alert

Locking Access Port Caps

Article 1101.10 of the International Mechanical Code (IMC) states that refrigerant circuit access ports that are located outdoors must have locking caps or be secured in another manner to prevent unauthorized access.

Valve and Insulation

Insulated Refrigerant Line Valve

Mueller Refrigeration Company, Inc.

Figure 52-12. Special cuts of insulation may be used to cover line components, such as this refrigerant line valve.

52.6.3 Installing Vibration Absorbers

To prevent leaks caused by compressor vibrations and to minimize vibration noise, install a vibration absorber in both the refrigerant lines connected to the compressor. Vibration absorbers are also installed in lines that experience expansion and contraction as a result of temperature changes, such as hot-gas defrost lines. Always follow the installation and service procedures provided by the vibration absorber's manufacturer. See **Figure 52-13**.

If a suitable vibration absorber is not available, an alternate method may be used to reduce the spread and effect of vibration. This method is to make one horizontal loop of soft copper tubing in the suction line and another horizontal loop of tubing in the liquid line. These vibration loops help to keep movement

Copyright Goodheart-Willcox Co., Inc.

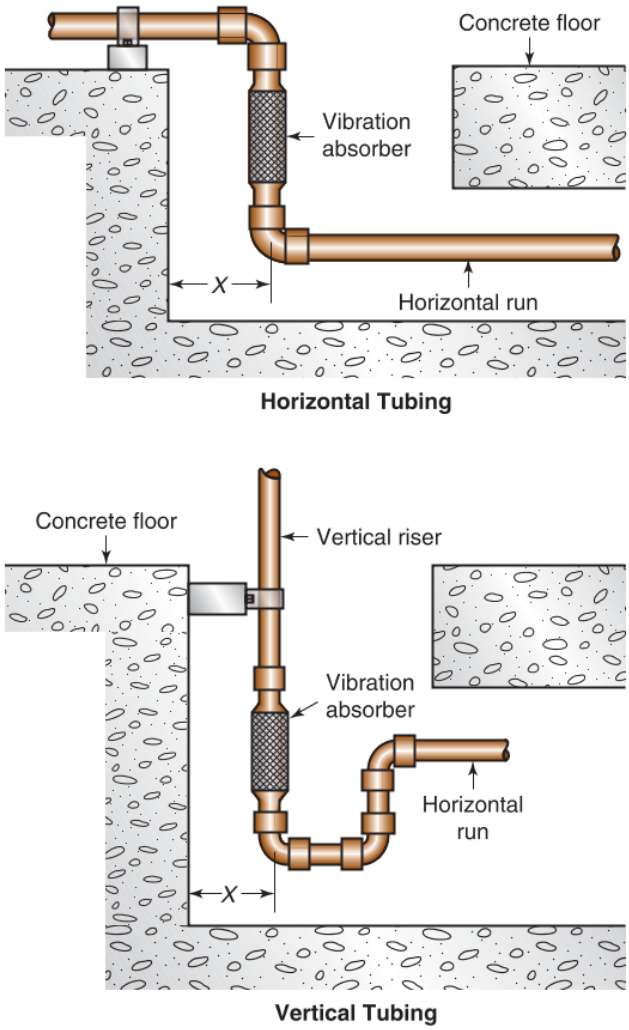

Goodheart-Willcox Publisher

Figure 52-13. Vibration absorbers should be secured to the building structure using clamps. Allow a space of 1 1/4″ at *X* for each 100′ per 100°F (55°C) temperature change.

from crystallizing the copper, making it crack or break. However, only put loops and unsupported bends in the tubing at the condensing unit.

52.6.4 Installing Filter-Driers

In commercial refrigeration systems, filter-driers are a standard part of the installation. Filter-driers help to protect the compressor from contamination and moisture, both of which can cause compressor burnout. Filter-drier size is typically based on the following criteria:

- Compressor horsepower.
- Compressor operating cycle (hours of operation per day).
- Type and quantity of refrigerant.

If additional tubing must be run during an installation, the technician must account for the added volume of refrigerant and oil in the system. Always consult manufacturer specifications when sizing filter-driers. If specifications indicate that the refrigeration system falls between two different filter-drier sizes, choose the larger filter-drier.

Filter-driers hold more moisture at lower temperatures. As a result, a liquid line filter-drier should be installed as close to the metering device as possible to keep the filter-drier away from the hot condenser. If a filter-drier heats up (often due to a shortage of refrigerant or due to high ambient temperature), it may release some of its absorbed moisture. Keep a filter-drier sealed until just before it is installed to prevent it from absorbing moisture from the air.

52.6.5 Installing Sight Glasses

The one component that should be located between a filter-drier and a refrigerant metering device is a sight glass. Most sight glasses have a moisture indicator, which is a color-changing element used to indicate a system's moisture content. If the sight glass is installed prior to the filter-drier, the moisture indicator may show moisture that will be trapped by the filter-drier. Most sight glasses have brazed connections and are sized based on the diameter of the liquid line.

Caution

Brazing Moisture Indicators

Most sight glass moisture indicators have a removable moisture indicator core. The core may be removed when brazing the indicator into the refrigerant line and replaced when installation is complete. When installing a sight glass that does not have a removable core, avoid overheating the moisture indicator by putting a cold pack on it. A temperature of 275°F (135°C) or higher can affect the color-changing element. Also, avoid getting flux inside the sight glass because flux chemicals can affect the color-changing element as well.

52.7 Installing Electric Motors

A commercial refrigeration system must have the correct electrical power to operate motors, controls, and solenoid valves. Before installing a condensing unit, check the compressor motor's rated voltage, frequency (Hz), and phase to make sure they are the same as the electrical power source. This information is located on a nameplate attached to the compressor or condensing unit, **Figure 52-14**. The identification plates

Copyright Goodheart-Willcox Co., Inc.

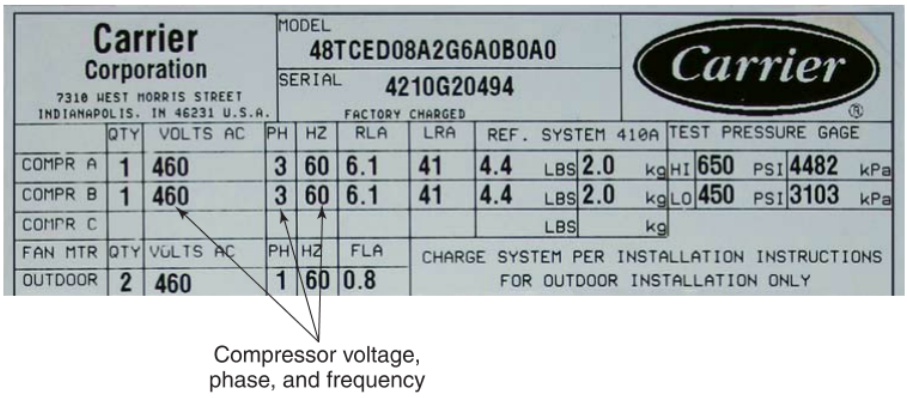

Goodheart-Willcox Publisher

Figure 52-14. The electrical specifications for compressor motors are listed on a nameplate attached to the condensing unit.

on evaporator fans, condenser fans, solenoid valves, and other controls must also be checked to make sure the data matches the power available.

Most municipalities require all high-voltage wiring to be completed by a licensed electrician during an installation. In general, this means circuits with 120 V or more should be wired by an electrician. However, HVACR technicians are permitted to connect and service low-voltage wiring and wiring within a unit. This is usually control wiring that is classified as part of a Class 2 circuit. For more information, see Chapter 13, *Electrical Power*.

Condensing units have wiring diagrams either fastened to them or supplied in the shipping crate. See **Figure 52-15**. Wire should have a capacity 50% over the load it will carry. Always consult the manufacturer's specifications for the correct wire size to use and follow all applicable codes in the National Electrical Code®.

Caution

Proper Wiring Practices

Do not turn on electrical power until all circuits are correctly wired and all connectors are clean and tight. Use an ohmmeter to check the circuits for continuity before turning on the power. Overloaded electrical circuits are dangerous and can cause burnouts or electrical fires.

52.7.1 Installing Open-Drive Compressor Motors

In an open-drive compressor, the compressor's crankshaft is connected either directly to the motor shaft or by means of a belt. In either case, the motor must be carefully aligned when installed. Proper alignment, balancing, and support can reduce damage from vibration. Always lock out the power before starting work.

For belt-driven arrangements, start by loosely installing the bolts that hold down the motor base. Usually, the motor base has slots for the bolts, which require you to reach under the mounting surface to hold the bolts in place. This often makes it difficult to put a wrench on the bolts. As a result, some technicians use caulking compound to hold the bolts in place until the motor is aligned and the washers and nuts are started on the bolts.

Before tightening the bolts, install the belts. Use a lever to move the motor until the belts are tight and the motor is in-line. While holding the motor in this position, tighten at least two of the bolts, and then tighten the others. Motors are usually fastened to their mounting surface with nut-bolt-washer combinations. However, mounting brackets, arrangements, hardware, and wiring vary with a motor's application.

For direct-drive arrangements, including water pump motors, set the motor on its part of the stand. Then assemble and install the coupling that connects the compressor crankshaft to the motor shaft. Check the alignment carefully. The motor shaft center must be the same height as the crankshaft center, and the two shafts must be in alignment when looking down at them. A dial indicator should be used to check the alignment before installing and tightening the bolts.

If possible, always turn the motor by hand before undoing the lockout and turning on the power. This will determine if the assembly will rotate freely.

52.7.2 Installing Hermetic Compressors

Hermetic compressors may be designed for low-, medium-, or high-temperature applications. A hermetic compressor is usually furnished with the following:

Copyright Goodheart-Willcox Co., Inc.

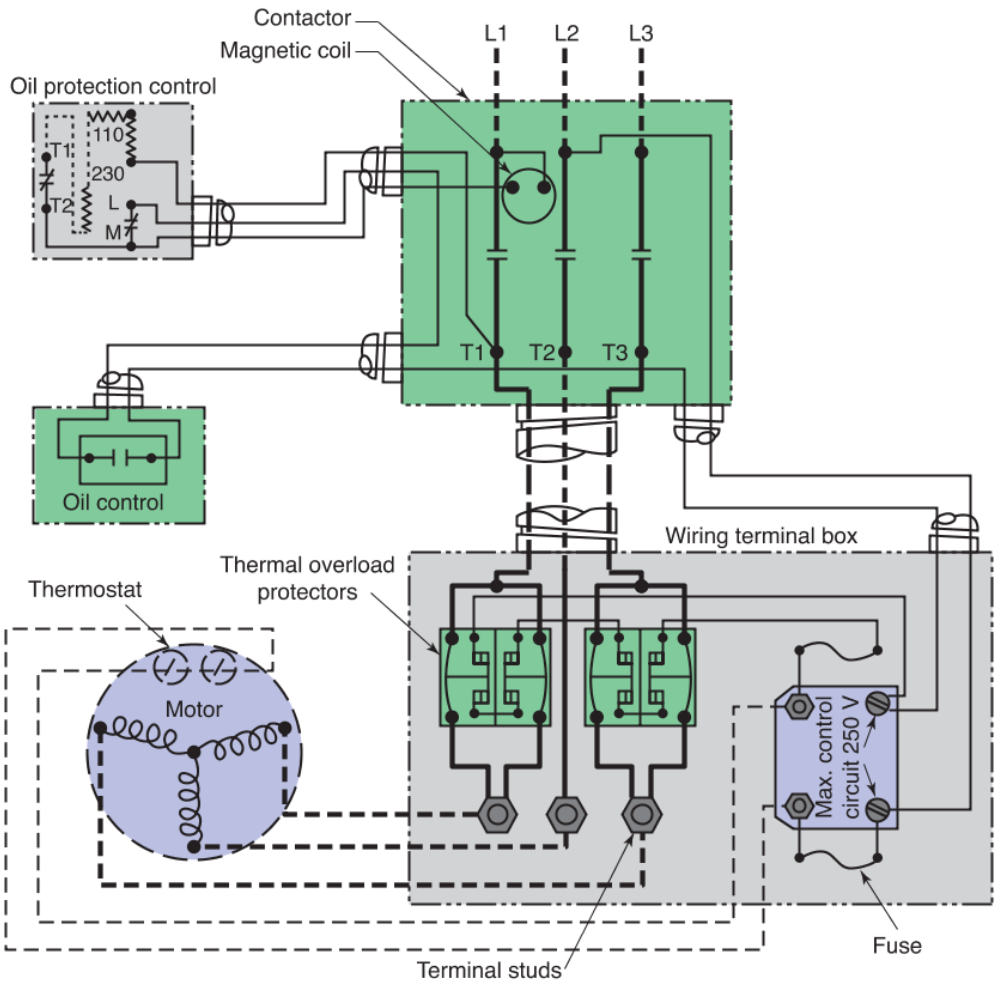

Goodheart-Willcox Publisher

Figure 52-15. Wiring diagram for a commercial condensing unit that uses three-phase power.

- Starting relay.
- Capacitors.
- Overload protectors.
- Other accessories.

Carefully mount the hermetic compressor in place. Use all safety precautions while lifting the compressor, such as steel toe shoes and protection for floors and equipment. Install the mounting bolts. The springs, grommets, and bolts must be in the correct position. If you are replacing a compressor, use an exact replacement. Review the data on the nameplate to ensure compatibility.

Install the electrical devices (such as the overload protectors and the starting relay) and the electrical wires. All wires, including insulation and wire terminals, must be in good condition. All connections must be clean and tight.

Caution

Aluminum and Copper Electrical Connections

Avoid connecting aluminum wires to copper wires or copper terminals. Galvanic corrosion may result.

After mounting the compressor in place, install the refrigerant lines. Some hermetic compressors have service valves while others are provided with short tubing stubs. In either case, the openings of the valves or stubs are usually sealed with plugs; however, some tubing stub ends are sealed by being crimped and brazed. Before the refrigerant lines can be installed, the crimped ends must be cut with a tubing cutter and swaged.

If brazed connections are used, start by identifying the tubing stubs. Distinguish between the suction connection, discharge connection, process tube, and

Copyright Goodheart-Willcox Co., Inc.

oil connection. Clean the tubing stubs, the suction line, and the liquid line with a fine grit emery cloth before applying flux. Before brazing, ensure that the area is well ventilated. After brazing, clean the connections with warm water to remove any remaining flux.

52.8 Testing Installations

There may be several inspections required during the phases of an installation. During these inspections, the code enforcement officer or inspector may issue a yellow tag, which means work may proceed, but certain items must be brought up to code. If the inspector issues a red tag, the work must stop until a plan to repair code violations is approved. Upon successful final inspection, the job is granted a green tag, which indicates the job is complete and approved by the code authority.

If the installation is not inspected in phases, an inspector is called on completion of the work. Approval must be given by the inspector before the system may be run. The inspector observes the installation to see if all the work has been done according to specifications and code. Then the system is tested for leaks and safety.

Leak testing involves using nitrogen, or another inert gas such as carbon dioxide, to build up pressure in the system's high and low sides. There must be a hand shutoff valve, a pressure regulator, a pressure gauge, and a pressure-relief valve installed between the nitrogen cylinder and the system. The pressure-relief valve should be adjusted to open 1 psi or 2 psi above the recommended testing pressure. The recommended testing pressure is typically provided on the system nameplate and varies based on the type of refrigerant in the system. See **Figure 52-16**. The inspector may observe this test or ask the HVACR technician to provide documentation that tests have been performed.

Caution

Leak Testing Pressures

Exceeding a system's recommended testing pressure can cause damage to the system and may even cause an explosion. If the system's high side and low side cannot be sealed from each other during testing, never exceed the recommended low-side testing pressure. If the recommended testing pressure is not listed, the pressure should not exceed 170 psig (1170 kPa).

After pressures are built up in the system, each joint should be gently rapped with a rubber mallet to ensure the joint will be leakproof under working conditions. Paint or flux may otherwise temporarily stop a leak. With nitrogen, either a bubble solution or an ultrasonic leak detector can be used to check for leaks. If no leaks are found, perform a standing pressure test by leaving the nitrogen in the system under pressure for 24 hours.

If the system pressure drops during the standing pressure test, the system has a leak. In some cases, the leak cannot be found with a bubble solution or an ultrasonic leak detector, which means a trace amount of refrigerant must be added to the system so that an electronic leak detector can be used. First, purge the system of nitrogen and pull a vacuum to eliminate as much moisture as possible. Then, charge the system to a low pressure, usually around 10 psig (70 kPa), with the same refrigerant that will be used in operation.

Most leaks can be found with an electronic leak detector at this low pressure. However, if the leak still cannot be found at low pressure, pressurize the system to the recommended testing pressure using nitrogen and check for leaks with the electronic leak detector again. Once the leaking joint is found, take it apart to repair it. In the case of brazed joints, take the joint completely apart and then assemble, flux, and braze again.

Once the system passes the standing pressure test, the inspector sometimes requires the system to undergo a standing vacuum test. To perform a standing vacuum test, a technician pulls a deep vacuum (less than 250 microns) on the system. If this vacuum is maintained over a specified period of time, the installation is approved. However, if the vacuum pressure rises during this time, there is a leak.

Recommended Design Testing Pressures (psig)

Refrigerant	Low Side	High Side	
		Evaporative or Water-Cooled Condenser	Air-Cooled Condenser
R-22	144	211	278
R-123	15	15	18
R-134a	88	135	186
R-401A	85	133	182
R-404A	174	253	331
R-407C	167	243	320
R-410A	238	344	449
R-507A	180	262	344

Goodheart-Willcox Publisher

Figure 52-16. Design testing pressures for different refrigerants as recommended by Underwriters Laboratories.

Copyright Goodheart-Willcox Co., Inc.

After the installation is approved, the system's running behavior should be recorded for at least 24 hours. Any variations in operating temperatures or pressures outside of the expected operating range for the given ambient temperature reveal a need for an adjustment.

52.9 Charging Commercial Systems

After a commercial refrigeration system has been assembled, tested, and approved, it must be evacuated prior to charging. When charging a system, refer to the manufacturer's directions if they are available. Manufacturers design and test their products under various operating conditions. From these tests, specific charging procedures are developed. For more information on evacuation and charging procedures, see Chapter 11, *Working with Refrigerants*. In general, there are two methods used to charge commercial refrigeration systems:

- Low-side method.
- High-side method.

52.9.1 Low-Side System Charging

Low-side charging is a method of injecting refrigerant vapor into the low side of a commercial refrigeration system through a low-side service valve, often the suction service valve (SSV). Since refrigerant vapor is much less dense than liquid refrigerant, it takes longer to charge a system with vapor than it would with an equal weight of liquid refrigerant. As a result, low-side charging should only be used to charge smaller commercial systems or to "top off" the existing refrigerant charge in a system. The main advantage of low-side charging is that it prevents the possibility of slugging the compressor.

Caution

Liquid in the Compressor

Liquid refrigerant should never be charged through the low side. Liquid refrigerant entering through the suction line can immediately cause liquid slugging and permanent damage to the compressor.

Low-side charging can only be done with pure refrigerants, such as R-123 or R-134a. Zeotropic refrigerant blends, such as R-404A, cannot be charged as a vapor to the low side because the different refrigerants that make up the blend vaporize at different pressures. This means that if the blend is charged as a vapor, it will fractionate and create an improper mixture of refrigerants in the system. Zeotropic refrigerant blends should only be charged into a system as a liquid.

Low-Side Charging Procedure

Remember to wear goggles when transferring refrigerants. To prevent the venting of refrigerant to the atmosphere, use quick-connect fittings to connect and disconnect service lines.

1. Connect a refrigerant cylinder and gauge manifold to the system as shown in **Figure 52-17**. Place the refrigerant cylinder in the upright position on the charging scale. Leave the connections to the service valves loose.
2. Open the low-side and high-side valves on the gauge manifold.
3. Crack open the refrigerant cylinder valve to purge the service lines. Once the lines have been purged, close the cylinder valve and tighten the service valve connections.
4. Close the high-side valve on the gauge manifold, but keep the low-side valve open.
5. Put the suction service valve in the mid-position and crack open the discharge service valve. Although the gauge manifold's high-side valve is closed, cracking open the discharge service valve allows you to monitor the high-side pressure during the charging procedure.
6. Open the refrigerant cylinder valve to add refrigerant vapor to the system through the low side.
7. When the pressure equalizes between the cylinder and the system, the refrigerant will stop flowing into the system. Turn on the system to operate the compressor to draw in the remaining refrigerant charge.
8. Closely monitor the scale to ensure the system is not being overcharged. Some scales can be programmed to stop the charging process automatically when the proper weight has been charged into the system.
9. When the proper weight of refrigerant has been added to the system, close the gauge manifold's low-side valve and the refrigerant cylinder valve to stop the charging process.
10. Back seat both the suction and discharge service valves. Disconnect service lines and replace service valve caps.
11. Let the system operate for 10 to 15 minutes to stabilize temperatures and pressures. Check superheat, subcooling, head pressure, and suction pressure to verify that the system has the correct charge.

Copyright Goodheart-Willcox Co., Inc.

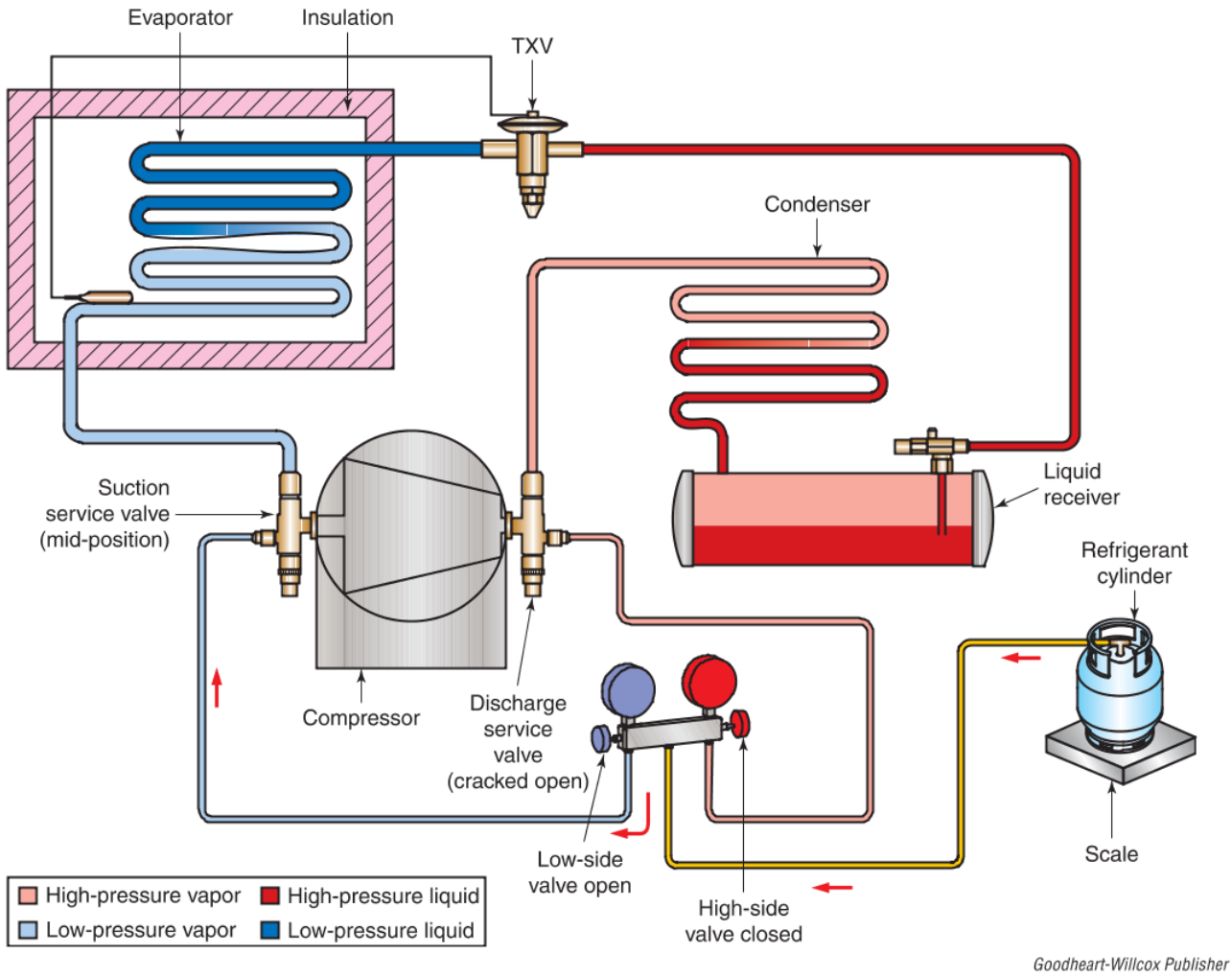

Figure 52-17. Diagram showing the system setup for low-side charging.

To speed up the low-side charging process, a technician can heat up the refrigerant cylinder using hot water, a heat lamp, a heat gun, or an electric blanket. By increasing the temperature of the cylinder (a closed volume), its pressure is increased. This follows the principles of Gay-Lussac's law. Creating a greater pressure difference between the cylinder and the system forces more refrigerant out of the cylinder. Never use a torch to warm a cylinder.

A technician must be present at all times during a charging process to monitor pressures and refrigerant charge level. A refrigerant cylinder cannot be left connected to a system unattended.

52.9.2 High-Side System Charging

High-side charging is a method of injecting liquid refrigerant into the high side of a commercial refrigeration system through a high-side service valve, often the liquid receiver service valve (LRSV). Liquid charging through the high side is faster than vapor charging because liquid refrigerant is much denser than refrigerant vapor. High-side charging is best done with the system off to prevent overcharging the system. As liquid refrigerant is added to the system, the system pressure rises until it equals the pressure in the refrigerant cylinder. At this point, the charging process stops because there is no longer a pressure difference between the system and the cylinder. If this occurs before the full amount of refrigerant has been charged into the system, the charge may be "topped off" by using the low-side charging method discussed in the previous section.

Another method of "topping off" the refrigerant charge is to isolate the liquid line from the liquid receiver, connect the liquid line to the refrigerant cylinder, and then operate the compressor. The running compressor draws liquid refrigerant

Copyright Goodheart-Willcox Co., Inc.

out of the liquid line into the low side of the system, which reduces the liquid line pressure and allows additional refrigerant from the cylinder to flow into the system. However, not all systems can be charged with liquid refrigerant when the compressor is running. In order for this method to work properly, the liquid receiver must be isolated from the service port, and the liquid line must be open to the service port. The system design and the location and build of the LRSV determine if this is possible. Also, a technician must ensure that only liquid is being fed into the liquid line and at an adequate rate. If vapor is drawn in or forms in the liquid line, it can wear or damage an expansion valve.

Caution

Liquid Receiver Isolation

If the liquid receiver cannot be isolated from the service port and liquid line, refrigerant at high pressure will be pumped from the compressor into the refrigerant cylinder. This can cause the cylinder to rupture or explode.

Note that service valves used on the high side of commercial refrigeration systems vary. Chapter 10, *Equipment and Instruments for Refrigerant Handling and Service* describes the different service valves available on systems. Some liquid receivers have an inlet service valve (queen valve) and an outlet service valve (king valve). When a system has both a queen valve and a king valve, different methods of liquid charging are possible depending on the build and orientation of these service valves. See what is possible with each system and determine the best solution.

High-Side Charging Procedure

Remember to wear goggles when working with refrigerants. To minimize refrigerant loss, use quick-connect fittings to connect and disconnect service lines.

1. Connect a refrigerant cylinder and gauge manifold to the system as shown in **Figure 52-18**. At first, leave the refrigerant cylinder upright and the hose connections to the service valves loose.
2. Open the low-side and high-side valves on the gauge manifold.
3. Crack open the refrigerant cylinder valve to purge the service lines. Once the lines have been purged, close the cylinder valve and tighten the hose connections to the service valves.
4. Close the low-side valve on the gauge manifold, but keep the high-side valve open.
5. Place the refrigerant cylinder in the upside-down position on the charging scale. Program the scale and any associated components with the proper charge value.
6. Crack open the suction service valve. Although the gauge manifold's low-side valve is closed, cracking open the suction service valve allows you to monitor the low-side pressure.
7. Examine the liquid receiver service valve to determine its build and orientation in the system. Often, front seating the valve will block the liquid line, allowing you to charge liquid refrigerant into the liquid receiver. If the liquid line cannot be blocked, adjust the valve to mid-position.
8. Open the refrigerant cylinder valve to add liquid refrigerant to the system through the high side.
9. Refrigerant will stop flowing into the system when the charging scale automatically stops (if programmed to do so) or when the pressure equalizes between the refrigerant cylinder and the system.
10. If the system still needs more refrigerant, either follow the low-side charging procedure to charge the system with refrigerant vapor or continue following this procedure to charge the system with liquid refrigerant.
11. Adjust the liquid receiver service valve to block off the liquid receiver and allow the service port to access the liquid line.
12. Cycle on the system to operate the compressor and charge the remaining refrigerant. Ensure that only liquid refrigerant flows into the liquid line. This prevents vapor from forming, which can damage expansion valves. Monitor the charging scale to know when to close the different valves. Do not rely entirely on the charging scale to automatically stop the process.
13. When the proper weight of refrigerant has been added, close the gauge manifold's high-side valve and the refrigerant cylinder valve to stop the charging process.
14. Back seat both the suction service valve and liquid receiver service valve. Disconnect service lines and replace service valve caps.
15. Let the system operate for 10 to 15 minutes to stabilize temperatures and pressures. Check superheat, subcooling, head pressure, and suction pressure to verify that the system has the correct charge.

Copyright Goodheart-Willcox Co., Inc.

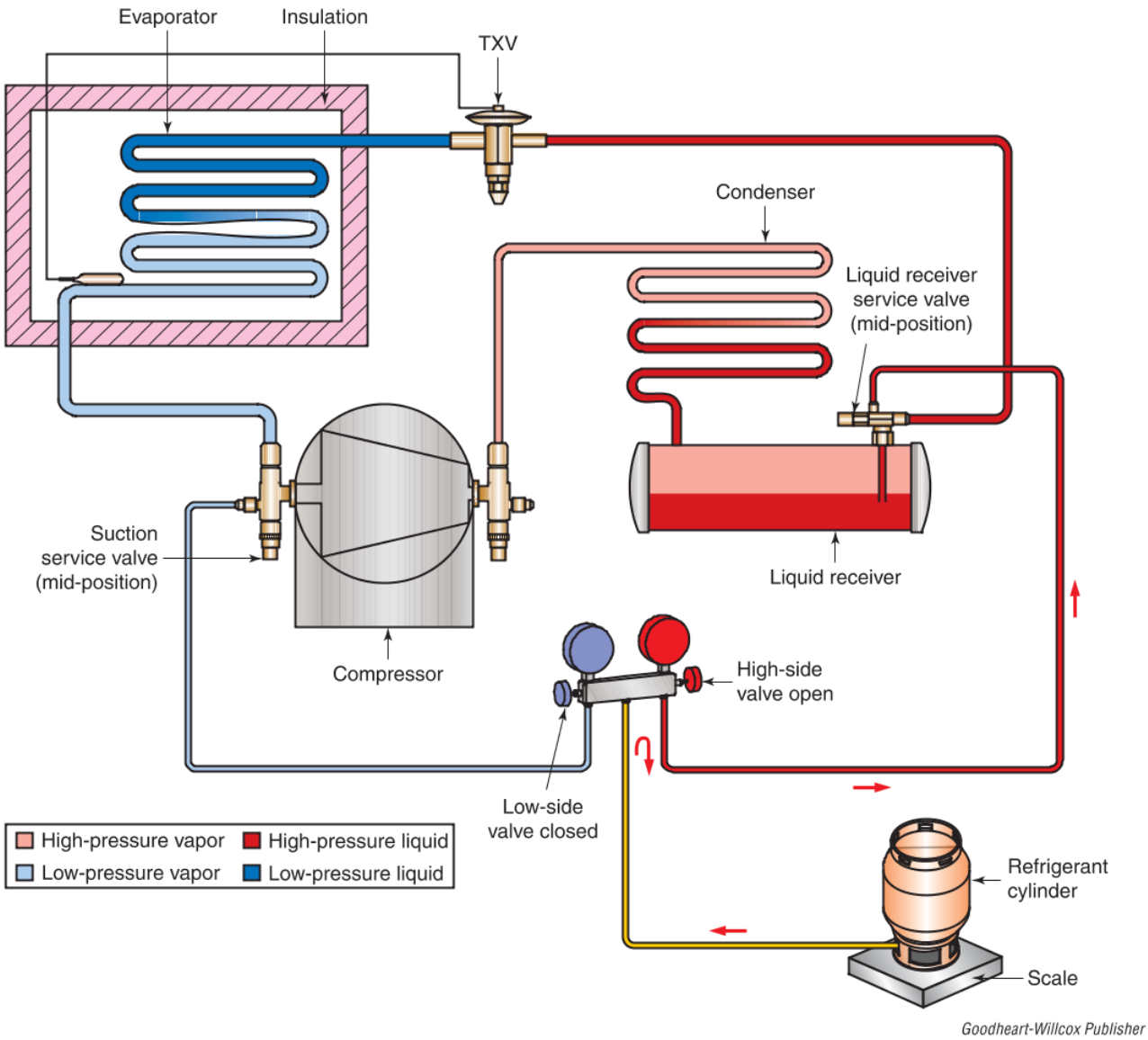

Figure 52-18. Diagram showing the system setup for high-side charging.

Caution

Charging Systems with Hermetic Compressors

A running hermetic compressor requires refrigerant vapor to cool its windings or else its motor will overheat. For this reason, it is best to "top off" the refrigerant charge in systems with hermetic compressors by charging refrigerant vapor through the low side with the system running.

52.10 Starting a Commercial Refrigeration System

A planned procedure should be followed when starting a newly installed commercial refrigeration system. This also applies when starting a commercial refrigeration system that has been shut down for a long period of time. Before a system is put into operation, its motor controls should be adjusted. The settings of motor controls

Copyright Goodheart-Willcox Co., Inc.

vary with the demands of the conditioned spaces and the type of refrigerant used. For a review of motor controls, see Chapter 16, *Electrical Control Systems*.

Starting a Commercial Refrigeration System

To avoid overloading electrical circuits, the compressor, and any other motors, begin by verifying that the system's power source supplies the correct voltage and phase. Also, make sure that all electrical connections made during the installation use conductors capable of carrying the system's required current draw.

1. Connect a multimeter to the compressor circuit to monitor current draw and source voltage. Multimeters with recording features are preferred. A clamp-on ammeter is the most convenient method of measuring electrical amperage.
2. Install a gauge manifold to monitor high-side and low-side pressures.
3. If the condenser is water cooled, make sure the water circuit is turned on.
4. After starting up the system, check the electrical meters, pressure gauges, and water flow (if applicable) as soon as possible for proper levels. Shut down the system at the first sign of trouble.
5. Determine if the refrigerant metering device adjustment is correct for each evaporator by checking superheat. Suction line frosting is often an indication that a refrigerant metering device is opened too far. Suction line sweating may indicate that the valve is not open far enough.
6. Determine if the system has enough refrigerant. Check the manufacturer's charts for recommended high-side pressure, low-side pressure, and evaporator temperature for the given ambient condition.
7. For the first week of the system's operation, use instruments, such as thermometers and multimeters, with recording features. Accurate records make adjustments easier. Maintain these records for use during future maintenance and service operations.

When a refrigeration system is started for the first time or after having not run for an extended time, conditioned space temperature will be well above its set point. Such operation is called a hot pull down. Starting a multiple-evaporator system under the full heat load of all the evaporators may overload the compressor. This is because the TXVs fully open on start-up. The system will not exhibit proper temperatures or pressures until the conditioned space is much closer to its set point.

There are a couple of ways of handling a full heat load when starting a multiple-evaporator system. One method involves adjusting individual evaporator shutoff valves during start-up. Another method involves throttling the suction service valve.

52.10.1 Starting a Multiple-Evaporator System Using Shutoff Valves

To avoid overloading the compressor and to compensate for start-up under a full heat load, close each of the shutoff valves on the suction line manifold before the compressor is started. After starting the compressor, immediately but slowly open one of the shutoff valves. This allows a limited amount of refrigerant from one evaporator to be pumped to the compressor.

Monitor low-side pressure. It should only be a little higher than the pressure motor control's cut-in pressure. If the low-side pressure is higher, begin to slowly close the open shutoff valve. As low-side pressure levels off to a normal measurement, gradually open the shutoff valve. Continue this monitoring and adjustment until the shutoff valve is completely open.

After refrigerant has been circulating through the evaporator for a few minutes, the evaporator will cool. This tends to make the TXV choke off the refrigerant flow. It also gives the compressor a chance to gradually reduce its load. This is when the other evaporators may be brought into service one at a time in the same way as the first evaporator.

52.10.2 Starting a Multiple-Evaporator System by Throttling the Suction Service Valve

When throttling the suction service valve (SSV) to compensate for start-up under a full heat load, begin by connecting a gauge manifold to the service port on the SSV. Adjust the SSV so that it is cracked open. This leaves a small opening between the suction line and the compressor to allow a limited amount of refrigerant from the suction line to be pumped by the compressor.

Turn on the compressor and closely monitor low-side pressure. Measurements should be just over the pressure motor control's cut-in pressure. If the low-side pressure is higher, gently and gradually turn the valve stem on the SSV to move the valve closer to the front-seated position. As the compressor operates, the evaporators will cool, and the low-side pressure will begin to drop. As the low-side pressure drops, gradually open the SSV more. Continue monitoring pressure and slowly opening the SSV until the SSV is in mid-position and the system reaches normal operating pressures and temperatures.

Copyright Goodheart-Willcox Co., Inc.

Chapter Review

Summary

- Commercial refrigeration system installations fall into two broadly defined groups: packaged systems and split systems. Split systems may have a single refrigerated cabinet or multiple refrigerated cabinets that operate at different temperatures.
- Codes regulate the installation of commercial systems to ensure quality and safety. Codes often require that the installer be licensed, the installation have a permit, the refrigerant lines be clearly labeled, and the installation be inspected before operation.
- When installing a condensing unit, avoid placing the unit where it can be exposed to heat sources or freezing temperatures. Use mounting grommets for the compressor to absorb vibrations that could damage parts of the system.
- Proper sensing bulb placement is necessary for proper TXV operation. Based on the size of the suction line tubing, a sensing bulb is mounted at a position aligning with a particular hour hand position on a clock.
- Evaporators in refrigerated display cases are usually mounted on stands or brackets. Evaporators should be carefully checked after mounting to make sure they are level. If an evaporator is mounted vertically, the outlet should always be below the inlet to allow for oil return to the compressor.
- Refrigerant lines in commercial refrigeration systems are usually made of hard-drawn ACR tubing. Supports, such as tubing clamps, should be used at intervals frequent enough to prevent the tubing from pinching. When installing components in refrigerant lines with brazing, remove any inner parts possible or use a wet cloth to protect them against heat transfer.
- Regardless of whether an open-drive compressor is direct drive or belt driven, the motor must be carefully aligned. For belt-driven arrangements, install the belts before tightening the mounting bolts. For direct-drive arrangements, check the alignment carefully using a dial indicator. After installation, turn the motor shaft by hand to test whether it will rotate freely.
- To test a newly installed system for leaks, technicians charge the system with nitrogen to perform a standing pressure test. Sometimes a system is charged with a trace amount of its refrigerant and nitrogen so that leaks can be found with an electronic leak detector. A standing vacuum test is often performed once the system passes the standing pressure test.
- Refrigerant can be charged into either the low side or the high side of a system. Low-side charging involves running the compressor to draw vapor from a refrigerant cylinder through the suction service valve (SSV). High-side charging injects liquid refrigerant into the system through the liquid receiver service valve (LRSV) while the compressor is off.
- After starting a newly assembled commercial refrigeration system, measure and compare the system's electrical, pressure, and temperature variables to ensure they are at the proper levels. When starting a multiple-evaporator system, limit the refrigerant that can reach the compressor by adjusting shutoff valves on the suction line manifold or by throttling the suction service valve (SSV).

Review Questions

Answer the following questions using the information in this chapter.

1. Most municipalities require a technician to obtain a(n) _____ before a commercial refrigeration installation can be made.
   A. inspection
   B. permit
   C. specification sheet
   D. standing pressure test
2. The discharge line from the compressor should be _____ to the condenser.
   A. kept as level as possible
   B. looped
   C. sloped downward
   D. sloped upward
3. All of the following devices are used to prevent excessive pressure in the condensing unit, *except* _____.
   A. check valves
   B. pressure controls
   C. rupture discs
   D. spring-loaded relief valves

Copyright Goodheart-Willcox Co., Inc.

4. A sensing bulb for a thermostatic expansion valve should never be mounted on the _____ of a tube.
   A. bottom
   B. left side
   C. right side
   D. All of the above.
5. The suction line maintains a gradual slope downward from the evaporator to the compressor in order to _____.
   A. aid liquid refrigerant circulation
   B. aid oil returning to the compressor
   C. prevent moisture from accumulating on the low side
   D. prevent vapor from condensing into liquid
6. When tubing must be run through a floor or wall, use short runs of _____ to protect the tubing.
   A. conduit
   B. ductwork
   C. soft ACR tubing
   D. tubing clamps
7. Shutoff valves in refrigerant lines _____.
   A. require using a refrigeration service valve wrench
   B. should be hand operated
   C. should be operated automatically
   D. should have backup bypass solenoid operation
8. Liquid line filter-driers should be installed as close as possible to the _____.
   A. accumulator
   B. condenser
   C. liquid receiver
   D. refrigerant metering device
9. The size of a filter-drier is based on the following criteria, *except* _____.
   A. compressor horsepower
   B. compressor operating cycle
   C. refrigerant quantity and type
   D. risk of galvanic action
10. The best location for a sight glass is between the _____.
   A. accumulator and compressor
   B. compressor and condenser
   C. condenser and liquid receiver
   D. filter-drier and refrigerant metering device
11. Before a system can be operated, a leak test must be performed by building up system pressure using _____.
   A. ammonia
   B. nitrogen
   C. oxygen
   D. sulfur dioxide
12. When a leak test is performed without any refrigerant inside the system, use a(n) _____ as the method of leak detection.
   A. bubble solution
   B. electronic leak detector
   C. halide torch
   D. All of the above.
13. Low-side charging involves adding refrigerant vapor to a system through the _____.
   A. discharge service valve
   B. liquid receiver service valve
   C. queen valve
   D. suction service valve
14. High-side charging involves adjusting a(n) _____ into position and adding liquid refrigerant through it.
   A. access port on an evaporator pressure regulator
   B. access port on a filter-drier
   C. liquid receiver service valve
   D. suction service valve
15. One method of starting a multiple-evaporator system requires the technician to throttle the _____.
   A. evaporator pressure regulator
   B. discharge service valve
   C. suction service valve
   D. thermostatic expansion valve

Copyright Goodheart-Willcox Co., Inc.

CHAPTER 53 Troubleshooting Commercial Systems—System Diagnosis

Chapter Outline

53.1 Commercial Refrigeration Troubleshooting
- 53.1.1 Effect of Lack of Refrigerant
- 53.1.2 Effect of Noncondensables in a System
- 53.1.3 Excessive Head Pressure
- 53.1.4 Excessive Suction Line Pressure Drop
- 53.1.5 Moisture in a Refrigeration System

53.2 Checking Refrigerant Charge

53.3 Diagnosing Common Symptoms
- 53.3.1 Low or No Refrigeration—Unit Runs Continuously
- 53.3.2 Normal to Excessive Refrigeration—Motor Running Continuously
- 53.3.3 Low to Normal Refrigeration—Longer Than Normal Run Time
- 53.3.4 No Refrigeration—Unit Does Not Run
- 53.3.5 Short Cycling
- 53.3.6 Noisy Unit

53.4 Troubleshooting Ice Machines
- 53.4.1 Water Quality
- 53.4.2 Drain Problems
- 53.4.3 Head Pressure in Ice Machines
- 53.4.4 Capacity Check
- 53.4.5 Cube Ice Machine Service
- 53.4.6 Flake Ice Machine Service

Learning Objectives

Information in this chapter will enable you to:

- Recognize the effects of an undercharged refrigeration system.
- Recognize the effects of an overcharged refrigeration system.
- Recognize the effects of noncondensables in a refrigeration system.
- Identify causes of suction line pressure drop.
- Summarize the effects of having moisture in a refrigeration system.
- Check a commercial refrigeration system's refrigerant charge.
- Differentiate among the different causes of high head pressure.
- Analyze a refrigeration system that runs continuously to determine its root cause.
- Evaluate a refrigeration system that produces little or no cooling.
- Analyze a refrigeration system that will not run to determine its root cause.
- Troubleshoot basic problems in ice machines.

Technical Terms

anti–short cycle control
capacity check
critically charged
ice thickness sensor
inefficient compressor
noncondensables
water level/conductivity probe

Review of Key Concepts

Reviewing these concepts from earlier chapters will help you understand new concepts presented in this chapter:

- Using troubleshooting charts and standard procedures can save time, money, and frustration. (Chapter 3)
- Comparing pressure and temperature conditions can be used in identifying refrigeration system and component problems. (Chapter 24)
- Diagnosing system problems in domestic refrigeration systems is often similar to diagnosing problems in commercial refrigeration systems. Certain conditions produce noticeable symptoms. System diagnosis relies on identifying symptoms and deducing their possible origins. (Chapter 25)
- Analyzing temperature and pressure conditions can provide clues to problems in HVACR system operation. (Chapter 25)
- Service valves can be installed in various places along a refrigerant circuit where they can isolate sections and provide access for measurements and service. (Chapter 10)

Introduction

A thorough knowledge of HVACR fundamentals is essential. Before trying to troubleshoot a commercial refrigeration system, review its basic operating characteristics, such as compressor current draw, superheat, subcooling, suction and head pressures, and evaporator and condenser temperature. When a measurement or a reading differs from normal operating characteristics, consider what might be causing that off measurement. Be aware that some obvious symptoms may be caused by less obvious root problems. Common sense is an invaluable asset needed to service, troubleshoot, and diagnose problems in commercial refrigeration systems.

Video

- Diagnosing Common Symptoms

53.1 Commercial Refrigeration Troubleshooting

For a commercial refrigeration system to operate correctly, the following parts of the system must exhibit the following capabilities:

- Cooling (low side).
  - A. Enough liquid refrigerant must be in the evaporator.
  - B. Evaporator pressure must be low enough so that the liquid will boil at the correct temperature.
  - C. Heat from the items being cooled must transfer to the liquid refrigerant in the evaporator.
- Condensing (high side).
  - A. Vapor must be pumped into the condenser at the correct pressure and temperature.
  - B. Heat must be removed from the condenser (clean condenser and adequate airflow or water flow).
  - C. There must be enough vapor space (heat transfer surface area) in the condenser.
- Liquid line (high side).
  - A. Tubing must be large enough.
  - B. There must be as few restrictions as possible (pinched pipes, partially clogged screens, filter-driers).
  - C. Only liquid refrigerant should be in the liquid line.
- Suction line (low side).
  - A. Vapor and oil should flow freely in the suction line.
  - B. Only a small pressure drop is allowable.
  - C. Any screens and filter-driers must not be restricted in any way.

System diagnosis starts with the owner's report. Then the low-side and high-side pressures and the evaporator temperature should be measured and compared with normal operating measurements, which should already be recorded after the system's installation. Check the sight glass for bubbles. Feel the suction line. It should be cool but not cold. A cool suction line contains vapor as it should, while a cold suction line contains liquid. Feel the liquid line. It should be warm but not hot. A warm liquid line contains liquid as it should, but a hot liquid line contains hot-gas vapor that did not condense and subcool.

To determine the source of the trouble in a refrigeration system, a technician must determine what is going on inside. Since the system is sealed, gauges are used to check refrigerant pressure throughout the system. Thermometers are used to measure temperatures along the evaporator, refrigerant lines, and condenser. A sight glass and a moisture indicator are used to check the flow of refrigerant and its moisture content.

Much of a troubleshooting investigation is based on logic. Technicians need to know what should be occurring inside a system. Then they must be able to visualize the movement and phase changing of the refrigerant and what each part of the system is supposed to do. A pressure-enthalpy diagram provides considerable aid in this area. The following sections show the effects of some of the more common troubles monitored using a pressure-enthalpy diagram.

53.1.1 Effect of Lack of Refrigerant

If a system is undercharged, each pound of refrigerant will not completely condense (liquefy) on the high side before it passes through the refrigerant metering device into the evaporator. The red vertical line in **Figure 53-1** shows where the refrigerant in an undercharged system passes through the refrigerant metering device. The dotted, black vertical line (left of the red line) represents where the refrigerant would have passed through the refrigerant metering device if the system had been properly charged. The brackets labeled *Heat not rejected from the refrigerant* indicate the amount of heat in Btu that is not absorbed in the evaporator or expelled from the condenser because of the lack of refrigerant. The results of an undercharged system are threefold:

1. The amount of latent heat absorbed into evaporator refrigerant is reduced, as indicated by the dotted red line in **Figure 53-1**. Therefore, the refrigeration or cooling effect is poor.
2. With heat still being absorbed but much less volume of refrigerant, pressure is low on the low and high sides. This does not allow all the high-side refrigerant to condense. Therefore, instead of all refrigerant liquid, some refrigerant vapor now passes through the refrigerant metering device into the evaporator, reducing the refrigerant metering device capacity.
3. This high-side vapor passing between the needle and seat of the refrigerant metering device at high velocity increases wear on the refrigerant metering device needle and seat.

In a dry evaporator or expansion valve system, the appearance of the valve body may be the first sign of low refrigerant. Under normal conditions the valve body frosts over evenly. It frosts evenly as far back as the liquid line connection. When there is too little refrigerant, the expansion valve body next to the liquid line will not frost. This frost method cannot be used for above-freezing evaporator operation conditions.

Copyright Goodheart-Willcox Co., Inc.

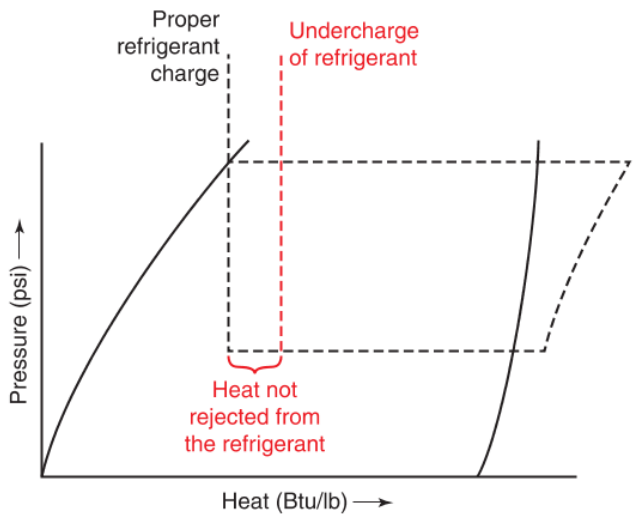

Goodheart-Willcox Publisher

Figure 53-1. Pressure-enthalpy diagram comparing the amount of latent heat of a properly charged system and an undercharged system. The latent heat not absorbed into evaporator refrigerant or rejected through the condenser will require the unit to run for a longer period of time to remove the same amount of heat as it would remove if it had a proper charge.

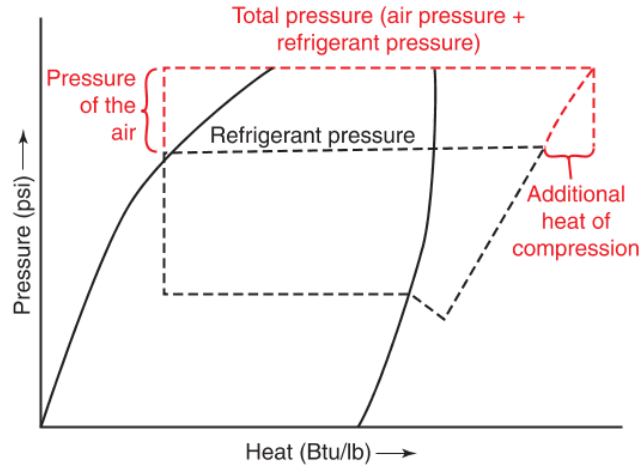

Goodheart-Willcox Publisher

Figure 53-2. Pressure-enthalpy diagram showing the effect of air in a refrigeration system. The additional heat of compression shows the additional heat energy put into the vapor as a result of the higher pressure the compressor must pump. The wasted energy is in the form of more electrical current needed to run the electric motor of the compressor against a higher head pressure. This consumes more electrical power than it would if pumping against a high side with no air in it.

53.1.2 Effect of Noncondensables in a System

Noncondensables are foreign substances that can enter a refrigeration system but do not phase change along with refrigerant. These substances can enter a refrigerant circuit through careless installation or service techniques.

Air is the most common noncondensable that gets trapped in a refrigeration system. Noncondensables inside the high side of a system increase the total head pressure, following the principles of Dalton's law. This means that total head pressure will equal the refrigerant condensing pressure plus the pressure of the noncondensables in the condenser. The refrigerant will have to condense at a higher temperature and pressure.

Because total head pressure is higher, the compressor has to pump the vapor to a higher temperature and pressure for heat rejection. The extra work performed by the compressor motor is illustrated in **Figure 53-2**.

The heat added to pump to the higher pressure is measured in Btu per pound of refrigerant. The cylinder head (especially the exhaust valve) and the top tube of the condenser will be at above-normal condensing temperatures. This higher temperature may harm the oil, which can lead to the formation of acids in the refrigerant circuit.

53.1.3 Excessive Head Pressure

If a condenser is undersized or dirty (internally or externally), heat cannot be rejected from the condenser as efficiently as it should. An undersized condenser does not have enough surface area to reject as much heat as a properly sized condenser. Dirt or film on a condenser's outer walls acts as an insulator, retaining more heat in the condenser. This extra heat builds up in the form of sensible heat, or heat that can be measured in degrees as a temperature rise. Gay-Lussac's law states that in a fixed volume, such as a condenser, as temperature rises, pressure also rises. Therefore, if a condenser is undersized or dirty, the resulting higher temperature will cause higher head pressure.

Figure 53-3 shows a refrigeration cycle diagram with normal and high head pressure. The higher pressure will require the compressor to draw higher electrical current to pump to the higher pressure and temperature, Loss C. The added heat of compression is shown horizontally between the normal head

Copyright Goodheart-Willcox Co., Inc.

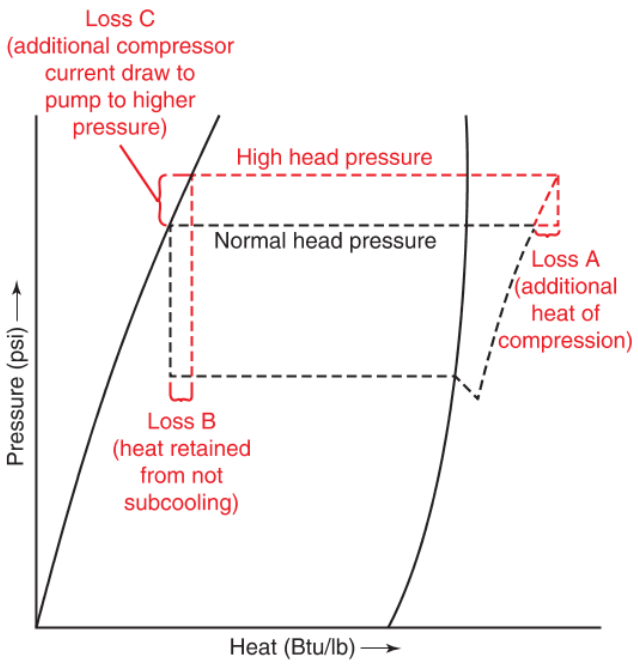

Goodheart-Willcox Publisher

Figure 53-3. Pressure-enthalpy diagram showing the effect of a dirty or undersized condenser or an above-average ambient temperature. The pressure and heat increase marked by Loss A shows the unnecessary added heat from the higher compression. Loss B indicates the loss in effective latent heat of liquid. Loss C indicates the extra work of compression required to compress vapor at the higher total pressure, which causes more amps to be drawn by the compressor.

pressure and high head pressure, Loss A. If the liquid does not subcool as much as it could, there is additional heat that is retained in the refrigerant, Loss B. With this additional heat, refrigerant passing into the evaporator has less capacity than if properly subcooled, **Figure 53-3**.

53.1.4 Excessive Suction Line Pressure Drop

Excessive pressure drop can be caused by a clogged low-side, inline component (such as a filter-drier or EPR) in the suction line or a pinched length of tubing. If the pressure of the vapor going into the compressor decreases, the compressor will pump less weight of vapor per stroke. Therefore, less vapor will be pumped per minute. The less vapor pumped, the lower the capacity of the system.

Figure 53-4 shows the effect of excessive suction line pressure drop on the refrigeration cycle. According to the various gas laws, as a substance's pressure decreases, there are three possible results. Firstly, the substance can expand to fill a larger volume. Secondly, the substance can absorb heat to maintain its pressure. Thirdly, the substance can do a combination of both: expand to fill a larger volume and absorb heat. In other words, as pressure decreases, volume can increase and its heat content can increase (which may increase temperature).

Service Call Scenario

53A: Walk-In Cooler—No Cooling

Customer Complaint: No Cooling

Possible Causes: Defective flare fitting, plugged filter-drier, leaks within the system.

Description of Problem: The owner of a florist shop, Ms. Blake, has reported that the walk-in cooler where flowers are stored is not cooling. Prior to arriving at the jobsite, the technician, Jeremy, reviews the work order. Upon arriving at the shop, he identifies himself to Ms. Blake and listens carefully to her comments. Jeremy observes that the unit is running for long periods, but is producing little cooling.

Testing: Jeremy installs the gauge manifold and notes that the low-side pressure is higher than normal. He then performs a superheat reading that indicates high superheat. He surmises that a loss of refrigerant may be the cause of the lack of cooling. Jeremy performs a refrigerant leak test and finds a small leak at the flare fitting at the inlet of the thermostatic expansion valve. He tightens the flare nut and rechecks for leaks. The flare fitting continues to leak. He notes a small oil film under the flare fitting. This is an indication of a leak. He disconnects the flare nut and examines it. He confirms that there is a small split in the fitting that has been allowing refrigerant to leak out. Jeremy informs Ms. Blake that the unit must have been leaking for some time and that the flare should be redone, and provides a cost for such. Ms. Blake agrees to have Jeremy perform the services.

Solution: Jeremy recovers the system's refrigerant. He disconnects the old flare and a new flare is made and tightened. The system is evacuated and recharged. Jeremy starts up the system and tests for refrigerant leaks. No leaks are found. All pressures and temperatures are within normal ranges. The unit is now cooling. He then provides Ms. Blake with the bill and informs her that a follow-up call will occur.

Safety: Always wear eye protection and the correct gloves. Liquid refrigerant will freeze on contact with skin or eyes.

Copyright Goodheart-Willcox Co., Inc.

Service Call Scenario

53B: Walk-In Cooler—No Cooling

Customer Complaint: No Cooling

Possible Causes: Dirty coil, overcharged system, defective compressor windings.

Description of Problem: Mr. Romano, the owner of a small diner, has reported that a walk-in cooler does not appear to be cooling. Prior to arriving at the jobsite, the technician, Manuel, reviews the work order. Upon arriving at the business, he identifies himself to Mr. Romano and listens carefully to his comments.

Testing: Manuel installs the gauge manifold to read the system's pressures. He notices that the compressor is short cycling and shutting down on high-pressure control. The high-side pressure is much higher than normal. When the high-side pressure increases to unsafe levels, the contacts of the high-pressure control open the control circuit. A further check indicates that the condenser coil is extremely dirty. The condensing unit is on the floor level and is exposed to kitchen floor debris. When the condenser coil is dirty, it restricts air movement across the coil, which, in turn, causes high-side pressure to increase. Manuel informs Mr. Romano of the conditions and the effect of the debris on the condenser. He recommends a thorough cleaning of the condenser and provides the cost for such. Mr. Romano agrees to have Manuel perform the service. Manuel turns the electrical power off to the unit. He thoroughly cleans the condenser using a coil cleaning solution. He then restores the electrical power to the unit and checks the system's pressures. All pressures and temperatures are now operating satisfactorily. The system is now cooling effectively. Manuel provides Mr. Romano with the bill and informs him that a follow-up call will occur.

Safety: High refrigerant pressures can be extremely dangerous. It is good practice to observe the condition of all components that may cause abnormal high-side pressures. Condenser and evaporator coils should be inspected on a regular basis for cleanliness. Dirty coils will affect cooling operation.

As a result of the pressure drop in the suction line, a smaller amount of vapor will expand to fill the volume available from the refrigerant held back by the pressure drop. The vapor also picks up heat, increasing its heat content (Btu) and temperature. This additional heat results in higher temperature at the compressor's exhaust valve.

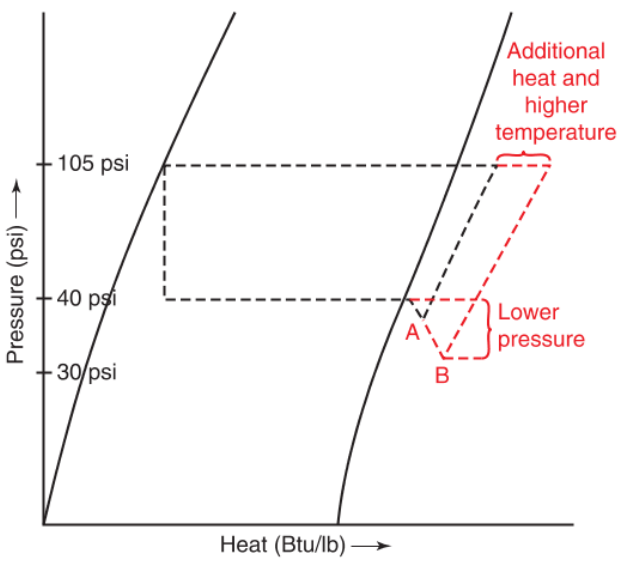

Goodheart-Willcox Publisher

Figure 53-4. A typical refrigeration cycle is shown when there is an excessive pressure drop and temperature rise along the suction line between Point A and Point B. This causes excessive temperature at the compressor's exhaust valve and cylinder head.

An excessive suction line pressure drop requires the system's condenser to remove more heat from each pound of vapor. This prolongs system operation, wastes energy, and increases the cost of operation. When the exhaust valve temperature becomes too high, there is also a danger of refrigerant lubricant deteriorating.

53.1.5 Moisture in a Refrigeration System

Many troubles in refrigeration systems may be traced to the presence of moisture. Moisture circulates in the presence of oil and refrigerant at high temperatures, especially in the compressor and condenser. During circulation through the system, moisture has many complex effects.

Moisture may cause rusting, corrosion, or oil sludging, which could cause a compressor's motor to burn out. If the moisture content is high enough and the temperature low enough, moisture separates from refrigerant and freezes. Sufficient moisture will form ice in capillary tubes, expansion valves, or other refrigerant metering device orifices, thus severely restricting flow and eventually blocking it entirely.

In hermetic refrigeration systems, moisture may also take part in a destructive chemical

Copyright Goodheart-Willcox Co., Inc.

process. When excessive heat breaks down oil and refrigerant, the mixture combines with moisture to form an acid that ruins motor winding insulation. Immediate action must be taken to remove all moisture or to make the moisture harmless. This will eliminate many troubles.

The occurrence and extent of moisture and refrigerant separation depends on temperature and the solubility of water in a given refrigerant. The greater the solubility, the less water separation from the refrigerant in a system and the less ice formed, **Figure 53-5**.

Refrigerants must be stored in sealed containers and must be kept completely dry. Most refrigerant manufacturers supply refrigerants that are dry (virtually free of moisture). The moisture content of previously unused refrigerant never exceeds 5 ppm (parts per million). Liquid refrigerants can hold more moisture in solution as the low-side temperature rises. This enables the refrigerant to circulate without danger of the moisture separating from it. Moisture that separates may freeze or form harmful compounds.

Moisture indicators with a sight glass are used to identify the amount of moisture in a system. They are located downstream from the liquid line filter-drier. The color of the moisture indicator changes with the presence of moisture in the system. For example, R-404A is dry below 20 ppm. An R-404A system has too much moisture above 75 ppm. A table of acceptable moisture content levels for certain refrigerants is shown in **Figure 53-6**.

Any amount of moisture at or above the wet value ppm could be harmful to the system. This is an indication that the filter-drier should be replaced. The presence of moisture in a refrigerant may be determined by a moisture indicator installed in the liquid line. A moisture indicator contains a special material in a sight

Refrigerant Moisture Content Levels		
Refrigerant	**Dry**	**Wet**
R-12	Below 5 ppm	Above 20 ppm
R-22	Below 30 ppm	Above 125 ppm
R-134a	Below 25 ppm	Above 110 ppm
R-404A	Below 20 ppm	Above 75 ppm
R-502	Below 15 ppm	Above 50 ppm

Note: Moisture levels correspond to refrigerant at 75°F (24°C).

Goodheart-Willcox Publisher

Figure 53-6. For best operation, these refrigerants should have a moisture content in the dry range. At the wet levels, moisture will begin freezing on the low side at the expansion valve.

Moisture Solubility, ppm by Weight										
Temperature	**R-11**	**R-12**	**R-13**	**R-22**	**R-113**	**R-114**	**R-123**	**R-134a**	**R-404A**	**R-502**
80°F (27°C)	113	98	—	1350	113	95	900	1300	700	580
70°F (21°C)	90	76	—	1140	90	74	770	1100	650	490
60°F (19.6°C)	70	58	44	970	70	57	660	880	590	400
50°F (10°C)	55	44	—	830	55	44	560	730	510	335
40°F (9.9°C)	44	32	26	690	44	33	470	660	490	278
30°F (7.11°C)	34	23.3	—	573	34	25	400	490	410	225
20°F (–6.17°C)	26	16.6	14	472	26	18	330	390	400	180
10°F (–12.2°C)	20	11.8	—	384	20	13	270	320	380	146
0°F (–17°C)	15	8.3	7	308	15	10	220	250	300	115
–10°F (–23°C)	11	5.7	—	244	11	7	180	200	280	90
–20°F (–28°C)	8	3.8	3	195	8	5	140	150	250	69
–30°F (–34°C)	6	2.5	—	152	6	3	110	120	190	53
–40°F (–40°C)	4	1.7	1	120	—	2	90	89	150	40

Note: Data on R-134a adapted from Thrasher *et al.* (1993) and Allied Signal Corporation. Data on R-123 adapted from Thrasher *et al.* (1993) and DuPont Company. Remaining data adapted from DuPont Company and Allied Signal Corporation. Used by permission.

Reprinted by permission of the American Society of Heating, Refrigerating, and Air-Conditioning Engineers, Atlanta, Georgia, from the 1994 ASHRAE Handbook—Refrigeration

Figure 53-5. Table showing the solubility in parts per million (ppm) of water in the liquid phase of different refrigerants at various temperatures.

Copyright Goodheart-Willcox Co., Inc.

glass that changes color depending on the amount of moisture in the refrigerant, **Figure 53-7**. Moisture indicators are covered in depth in Chapter 22, *Refrigerant Flow Components*.

Moisture must be removed from refrigerant; however, it may be impossible to remove all the moisture from a refrigerant. Nonetheless, the amount of moisture should still be kept very low. The maximum amount of moisture allowed will vary with the kind of refrigerant and the low-side temperature.

A service technician must depend on the moisture indicator to determine the amount of moisture in a system. If the moisture indicator's element changes color to show excessive moisture content, a new filter-drier and moisture indicator should be installed in the liquid line.

Some moisture indicators have replaceable elements that can be exchanged. Others require the entire indicator housing to be replaced. Always recover the refrigerant per EPA Section 608 guidelines and pull a deep vacuum on the system to remove as much moisture as possible from the unit. The system should then be operated until the moisture indicator indicates a dry condition. It may sometimes be necessary to replace the filter-drier several times to remove sufficient moisture from the system.

Pro Tip

Avoid Condensation Infiltration

When servicing a system, avoid exposing cold internal parts to ambient air. Moisture from the air will condense on the parts inside the system. Warm the cold parts to room temperature with a heat lamp before opening the system.

Many moisture indicators have a dry color and a wet color. However, some manufacturers produce moisture indicators with a third color to serve as an intermediate moisture state between dry and wet refrigerant conditions. This middle stage color serves as an early warning that moisture is accumulating. Technicians monitoring these moisture indicators can schedule any necessary preventive maintenance to avoid major breakdowns, **Figure 53-8**.

There are a number of ways of removing moisture from an HVACR system, including:

- Temporarily installing special filter-driers into the system.
- Recovering the refrigerant through special filter-driers.
- Pulling a vacuum on the system after recovering its refrigerant charge.
- Performing the triple evacuation procedure that includes injecting dry nitrogen after the first and second vacuums. Refer to Chapter 11, *Working with Refrigerants*, for more information on these procedures.

Danfoss

Figure 53-7. Moisture indicators are available in different sizes and with different types of connection, such as brazed or flare nut.

Emerson Climate Technologies

Figure 53-8. This moisture indicator monitors moisture at three different levels (dry, caution, and wet) that are represented by three different colors.

As an HVACR system cycles on to begin operation, bubbles will usually appear in the sight glass. This is normal. If bubbles continue to appear, the system may be low on refrigerant or the liquid line filter-drier may be partially clogged. In this case, if the filter-drier is clogged, the filter-drier will feel cooler than normal to the touch. This is because the filter-drier is acting much like a metering device and creating a pressure drop across the refrigerant line. This cooler temperature happens because the clog is reducing pressure and allowing liquid refrigerant to evaporate. The evaporating refrigerant is absorbing heat, which produces a cooling effect. Compare the temperature of the filter-drier at its inlet and at its outlet. A noticeable temperature difference generally indicates a pressure drop caused by a clog.

Copyright Goodheart-Willcox Co., Inc.

When bubbles in the sight glass and a cool filter-drier indicate that a filter-drier is clogged, many service technicians will install a large drier in the liquid line of the system on a temporary basis. These large driers quickly clean the system and remove moisture, **Figure 53-9**.

A properly operating drier becomes warmer as refrigerant flows through it and as the drier absorbs water from the refrigerant. This warming may be used as an indication that the drier is absorbing water. A sight glass with a moisture indicator installed further down the liquid line will determine whether the system's refrigerant is dry.

53.2 Checking Refrigerant Charge

The best way to ensure a proper refrigerant charge is to weigh in the exact amount into a system in vacuum. The proper method for checking a charged HVACR system's refrigerant charge is the superheat/subcooling method. However, in certain circumstances, a technician may need to quickly assess a system's operation and its approximate charge. When time and circumstances permit, weigh in the exact charge or perform the superheat/subcooling methods. Only when necessary, check a system's refrigerant charge by monitoring suction and head pressure and the condition shown in the sight glass.

A popular way to check for sufficient refrigerant charge is by monitoring a sight glass in the liquid line. When head and suction pressure are near manufacturer specifications and no bubbles appear in the sight glass, the refrigerant charge should be acceptable. Chapter 22, *Refrigerant Flow Components*, previously covered sight glasses. Most sight glasses are equipped with a moisture indicator. Manufacturers each have their own color-coding to indicate a system's moisture condition. If the sight glass is equipped with a moisture indicator, the technician can also tell at a glance whether there is a safe and acceptable level of moisture in the system.

A sight glass can be installed permanently into the liquid line or temporarily clamped onto the liquid line using an electronic sight glass. With a permanent sight glass, a technician can look into the refrigerant circuit and see if there are bubbles present in the liquid line. Bubbles may indicate an insufficient refrigerant charge in the system. An electronic sight glass is convenient in that installation does not require opening the refrigerant circuit, **Figure 53-10**.

A sight glass is not a sure-fire method of evaluating a system's refrigerant charge. Conditions other than a low refrigerant charge may cause bubbles in the liquid line. Two conditions to consider are location and insulation.

Where is a liquid line installed? Is it outdoors in extreme weather conditions or passing through uninsulated or unconditioned parts of a building? Does the liquid line have insulation that will protect the refrigerant from these outside influences? These factors may cause liquid refrigerant to change phase into a vapor. This is why a sight glass should be installed as close to a system's refrigerant metering device as

Courtesy of Sporlan Division - Parker Hannifin Corporation

Figure 53-9. A large temporary filter-drier is installed to clean the system and remove moisture.

TIF™ Instruments, Inc.

Figure 53-10. This electronic sight glass clamps onto tubing and senses bubbles flowing within liquid refrigerant.

Copyright Goodheart-Willcox Co., Inc.

possible. Also, whenever possible, a sight glass should be mounted in the liquid line downstream or after the filter-drier (between the filter-drier and refrigerant metering device) and any other in-line components.

Other conditions may cause bubbles in the liquid line. Bubbles may appear if tubing or a component upstream of a sight glass has a restriction. Even when there is sufficient refrigerant in the system, bubbles may appear in a sight glass. Be aware of these circumstances before using a sight glass as a way of checking refrigerant charge. Nonetheless, as a quick check method when suction and head pressures are acceptable, no bubbles appearing in a sight glass is a decent indication that an HVACR system probably has enough refrigerant.

53.3 Diagnosing Common Symptoms

Methods of testing to locate sources of trouble are based on a system's operating principles. Checking pressures, temperatures, running time, and electrical current or voltage helps to pinpoint the faulty part.

Technicians must have a thorough knowledge of refrigeration fundamentals and cycles. Only then can they become reliable and competent at trouble tracing and diagnosis. Troubles in a refrigeration system should be located before dismantling. This keeps the cost of servicing at a minimum and ensures proper operation of the unit after repair and assembly.

Methods of locating troubles vary with the type of system. This is especially true when comparing systems using direct expansion refrigerant metering devices with those using a capillary tube. A capillary tube is a passive device designed to provide only a fixed pressure drop. Most expansion valves are able to vary their pressure drop if necessary depending on high-side pressure and superheat.

A call for service should include at least one of the symptoms of the underlying trouble. The owner may say that the unit is not freezing but still runs continuously, or, the unit is freezing but runs continuously. The owner may say that it costs too much to operate a system. These complaints will usually give some indication as to what the trouble may be. Always verify these statements by checking over the refrigeration system before attempting any troubleshooting or service work.

In trouble tracing, first classify the type of service call. Then determine what caused the trouble described in the service call. The following troubleshooting pointers have been prepared to help in this procedure. Naturally, it is impossible to give every detail. However, once a technician learns the method of tracing trouble, there should be no difficulty.

Check all of the following variables in a refrigeration system before deciding what the trouble is:

- Suction pressure: _____ psi.
- Head pressure: _____ psi.
- Evaporator temperature: _____ °F/°C.
- Liquid line temperature: _____ °F/°C.
- Suction line temperature: _____ °F/°C.
- Superheat: _____ °F/°C.
- Subcooling: _____ °F/°C.
- Refrigerant charge amount: _____.
- Dryness of refrigerant (sight glass): _____.
- Running time of mechanism: _____ minutes.
- Probability of leaks.
- Noise.

Several basic fundamentals make locating trouble easier. When there is poor or no refrigeration, either or both of two things can be wrong:

- There is little or no refrigerant.
- The compressor is not moving the refrigerant. Pressures are not correct.

If there is no refrigerant, there will be no liquid refrigerant in the evaporator. This could mean that refrigerant has leaked out or is being held in a certain part of the system. It could be held due to clogged needles, clogged screens, or pinched lines. Clogging on the low side causes a high vacuum reading on the suction service valve.

A lack of refrigerant throughout the system causes a hissing sound at the refrigerant metering device. This indicates the refrigerant passages are not entirely closed. The sight glass will show bubbles.

The hissing sound at the refrigerant metering device always indicates a lack of refrigerant. The dry gas going through the restriction causes the hissing noise. This may be from the system being undercharged or perhaps having a restriction in the liquid line.

If a compressor is not functioning properly, the low-side pressure will be above normal. The condenser and discharge line from the compressor will be below normal temperature.

To determine what is responsible for a poor condensing condition (usually excessively high head pressure due to a dirty condenser or an overcharge of refrigerant), install the gauge manifold. Then measure the head pressure. Compare this pressure reading with what the pressure should be for the refrigerant being used. Check that the airways of an air-cooled condenser are free from

Copyright Goodheart-Willcox Co., Inc.

obstructions, that the tubing and fins are clean, and that the condenser fan is operating properly.

53.3.1 Low or No Refrigeration—Unit Runs Continuously

A common service call is low or no refrigeration with the unit running nonstop. This refrigeration system is not performing adequate cooling and continuously operating in an attempt to reach its cutout point. This type of condition is handled differently depending on whether the system has an expansion valve or capillary tube as its refrigerant metering device.

Undercharged System with a Capillary Tube

No or low refrigeration in a system with a capillary tube as its refrigerant metering device will probably not be able to remove enough heat to reach its cut-out point. It will run continuously. A likely cause is an undercharge of refrigerant.

Conditioned space temperature will be higher than normal, as not as much refrigerant will be available to absorb heat. Suction pressure will be lower than normal, as there is less refrigerant than normal.

Since there is very little liquid refrigerant in the evaporator, there will be less evaporation and less latent heat absorbed. This severely reduces the amount of heat absorbed. Much of the heat that is absorbed in an undercharged system will be sensible heat, which will mean a high superheat. This high superheat is still a much lower amount of heat (in Btu) than if there were more refrigerant and more latent heat being absorbed.

With less heat and less refrigerant for the compressor to pump, condenser pressure and temperature will be low. This lack of heat will also mean low subcooling. A low refrigerant charge in a capillary tube system will produce a hissing sound as the compressor shuts off.

A continuously running capillary tube system producing no or low refrigeration probably has an undercharge of refrigerant. Both low-side and high-side pressures will be below normal. Review the diagram in **Figure 53-11** for system characteristics of an undercharged capillary tube.

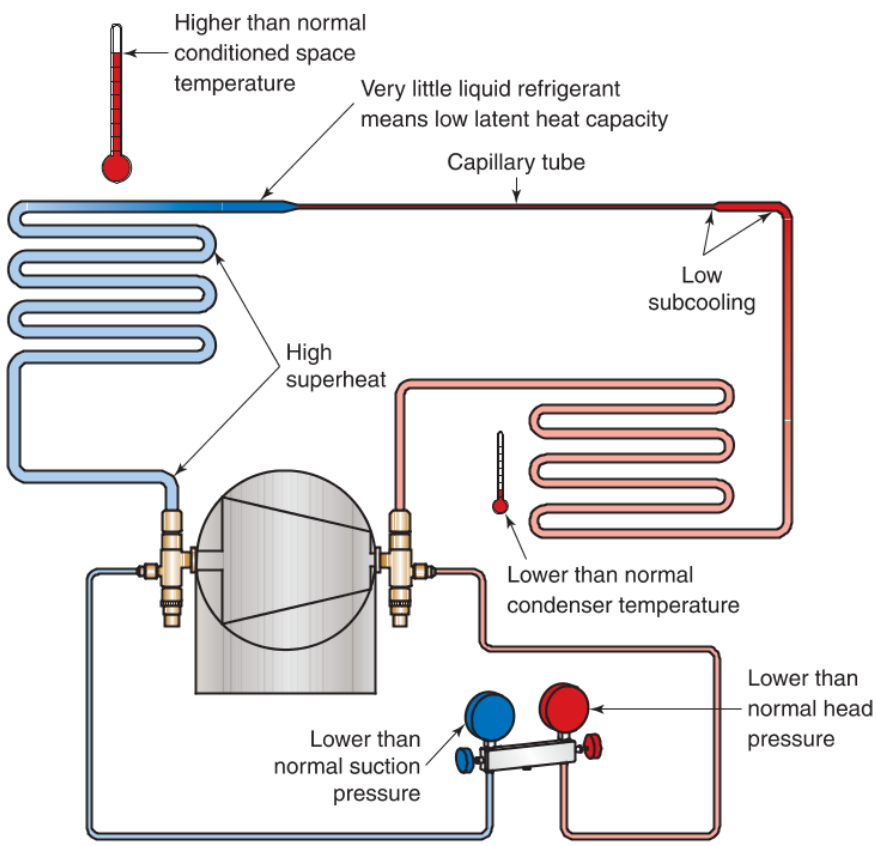

Goodheart-Willcox Publisher

Figure 53-11. An undercharged refrigeration system with a capillary tube as its refrigerant metering device will exhibit characteristics as shown in this diagram.

Copyright Goodheart-Willcox Co., Inc.

Undercharged System with a Thermostatic Expansion Valve (TXV)

A refrigeration system with a TXV that produces low refrigeration may be undercharged. This system will have a higher than normal conditioned space temperature, but suction pressure will be lower than normal. Since the evaporator will be starved of liquid refrigerant, any liquid refrigerant will quickly boil off and absorb sensible heat, creating a high superheat.

With less than normal heat being absorbed in the low side, less heat will be transferred to the high side. This will result in lower than normal condenser temperature and pressure. With so little heat, the refrigerant will have a low subcooling. With less heat and less liquid refrigerant available, some vapor will travel through the liquid line. This is evident as bubbles appear in the sight glass. Review the system diagram in **Figure 53-12**.

In an undercharged system with a TXV, frost or sweat may collect on the evaporator outlet tubing and reach as far as the TXV's sensing bulb. Another indication of refrigerant shortage is a warmer than normal or hot liquid receiver and liquid line. The extra heat indicates hot-gas refrigerant that has not condensed or subcooled. This vapor refrigerant should be visible as bubbles in the sight glass.

System with a Restriction in Its Capillary Tube

A refrigeration system that runs continuously but cannot cool down to normal temperature may have a restriction in its capillary tube. A restriction allows a smaller than normal amount of refrigerant to pass from the liquid line into the evaporator. Less refrigerant means less evaporation and less latent heat being absorbed. This reduces evaporator heat-absorbing capacity. Since less heat is being absorbed, conditioned space temperature rises above normal levels. Much of the heat that is absorbed is sensible heat, which means there will be a high superheat.

Meanwhile, the system's compressor continues pumping. With a constant compressor and less refrigerant and less heat absorbed, the suction pressure

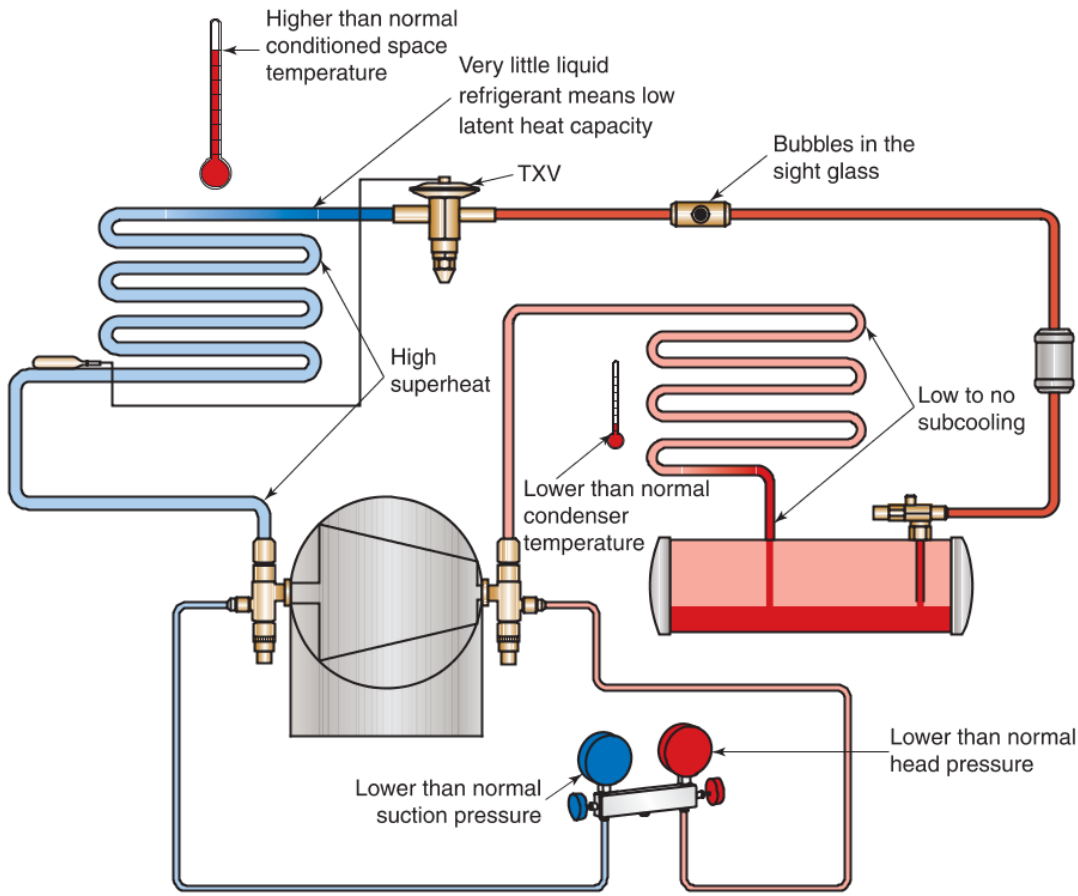

Goodheart-Willcox Publisher

Figure 53-12. An undercharged refrigeration system with a thermostatic expansion valve will exhibit characteristics as shown in this diagram.

Copyright Goodheart-Willcox Co., Inc.

drops. Lower pressure means a lower refrigerant temperature. However, since there is less refrigerant, the lower temperature is not enough to lower conditioned space temperature to the cut-out point, but the low temperature means that superheat will be high.

With less heat absorbed on the low side, less heat is moved into the high side. Since capillary tube systems do not use a liquid receiver, refrigerant accumulates in the condenser. There it has enough time to expel more heat than usual, which increases subcooling. Since capillary tube systems do not have a large charge of refrigerant and the subcooling is higher than normal, head pressure will be normal or lower than normal. Review operating characteristics of a refrigeration system with a restriction in its capillary tube in the diagram in **Figure 53-13**.

If a continuously running system with low or no cooling due to a capillary tube restriction does have high head pressure, it may be due to one of the following factors:

- An overcharge of refrigerant—especially in a critically charged system (one that requires a very precise charge).
- High ambient temperatures.
- Reduced airflow through the condenser.
- A thick coating of dirt and grime on the condenser.

As a capillary tube's restriction gets worse, an evaporator's cooling ability decreases. Suction pressure will decrease proportionally. Often, a customer will not realize that a system is malfunctioning until the evaporator is in or nearly in vacuum.

A restriction in a capillary tube may be due to clogging debris or frozen moisture. Upon opening a system, a technician often finds the restriction at the inlet end of a capillary tube, which will be clogged with debris. This may result from a filter-drier's beads gradually breaking apart and slowly accumulating over time. Often, a technician may cut off an inch or two of the clogged end of the capillary tube. This should not adversely affect operation. Also, the filter-drier should be replaced.

System with a Restriction in Its Thermostatic Expansion Valve (TXV)

A system's TXV can become clogged in more than one way. A piece of dirt or debris may become lodged in the valve, restricting flow and possibly making it impossible for the valve to fully close. Also, the TXV's inlet screen may become clogged. Also, moisture circulating

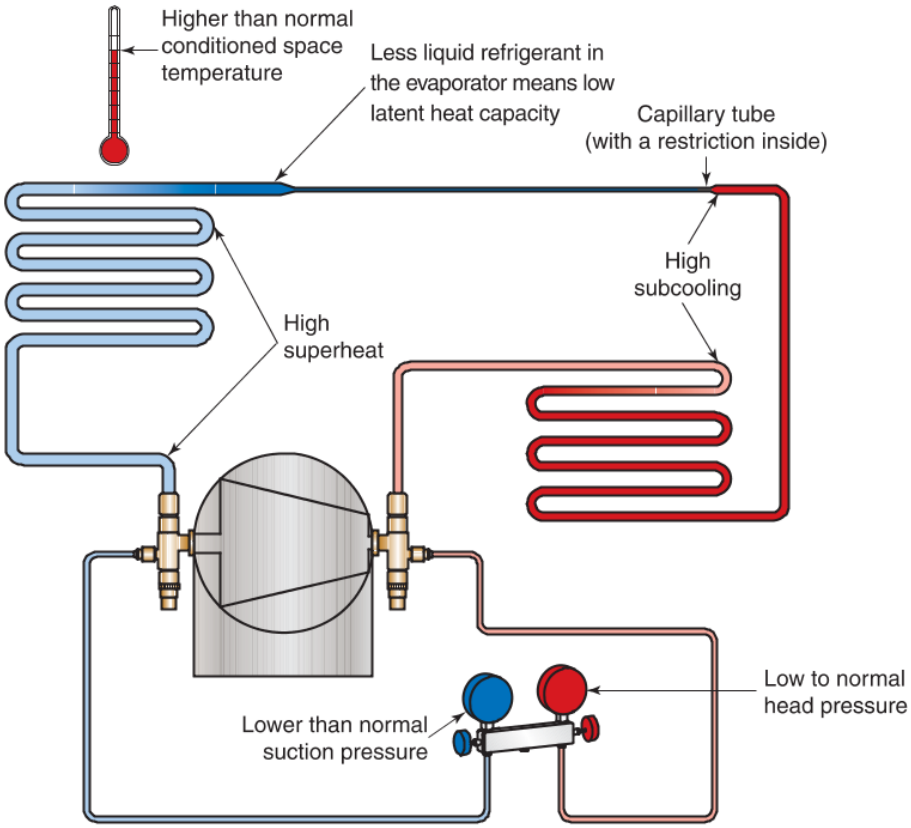

Goodheart-Willcox Publisher

Figure 53-13. A refrigeration system with a restriction in its capillary tube will exhibit characteristics as shown in this diagram.

Copyright Goodheart-Willcox Co., Inc.

with refrigerant can separate and freeze at a cold spot. A common point of freezing is on an expansion valve, where it can restrict the passageway. Screen clogging and moisture freezing at the refrigerant metering device each cause a system to behave in the same manner. The difference is in how to fix the problem.

When a system's TXV has a restriction, such as a clog or ice formation, less refrigerant passes from the liquid line through the TXV into the evaporator. Less refrigerant results in a reduced low-side pressure. Less refrigerant also means less latent heat available for absorbing heat, so the conditioned space temperature will be higher than normal. The low-temperature, low-pressure refrigerant absorbs more sensible heat, which results in high superheat.

On the high side, condenser temperature is lower than normal, since less heat than normal was absorbed in the evaporator. Condenser pressure may be reduced somewhat; however, subcooling remains normal, as the bulk of the refrigerant is stored in the liquid receiver. Condenser pressure will only be higher than normal due to other common outside influences, such as high ambient temperature, reduced airflow, or an overcharge of refrigerant. Since sufficient liquid refrigerant will flow through the liquid line, no bubbles will appear in the sight glass. Review the characteristics of a system with a restricted TXV in the diagram in **Figure 53-14**.

Sometimes a restricted TXV is caused by a particle of dirt or some other minor contaminant. If a system needs to be quickly brought back into operation to preserve a product, a technician can use liquid refrigerant to flush the expansion valve. A more thorough repair can be scheduled at a later, more appropriate time for the customer.

If a restriction is thought to occur in a TXV, it may be one of three problems: ice formation, clogged valve, or restricted inlet screen. The simplest repair (without opening the system) is to first melt any ice in the TXV. The next step is to cycle the system to remove any debris trapped in the valve. If these procedures do not work, the system must be opened and the valve screen (if present) or entire valve replaced.

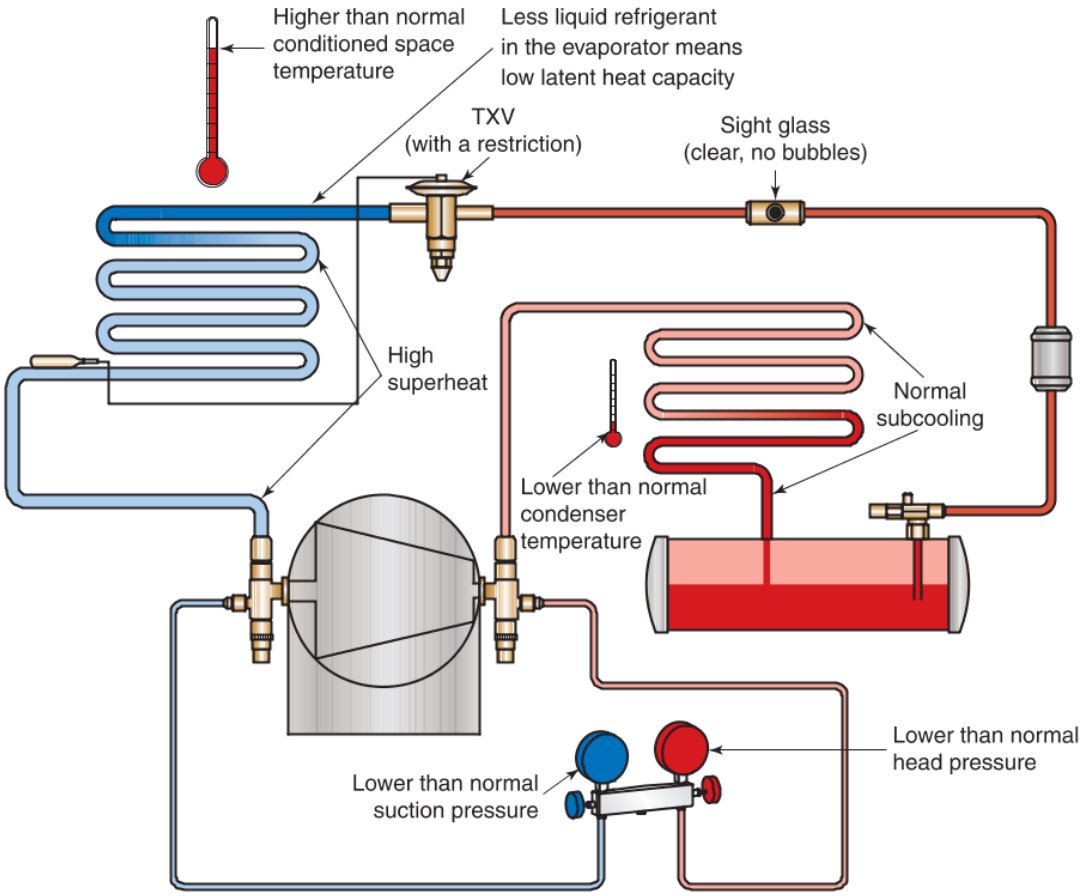

Goodheart-Willcox Publisher

Figure 53-14. A refrigeration system with a restriction in its thermostatic expansion valve will exhibit characteristics as shown in this diagram.

Copyright Goodheart-Willcox Co., Inc.

Moisture frozen in a TXV may cause more than one problem. It may restrict refrigeration flow during the On cycle, and it may also prevent the TXV from closing properly during the Off cycle.

When a TXV cannot fully close, the evaporator will become flooded during the Off cycle. This could result in short cycling the system. Flooding during the Off cycle may be visibly evident in frosting or sweating on the suction line.

During the On cycle, an ice restriction in a TXV may reduce flow so much that temperature cannot drop enough to satisfy the thermostat. Even if the compressor operates long enough to satisfy the thermostat, there may be too much refrigerant continuing to flow into the evaporator to satisfy the pressure control, which will keep the compressor operating. An ice restriction often causes low-side pressure to fluctuate. A service technician must carefully review and analyze system behavior and measurements to determine what is causing a system to operate as it is.

SPX Corporation

Figure 53-15. A heat gun will provide safe and gentle heat for situations like melting frozen moisture in a TXV.

Fixing a System with a Frozen Moisture Restriction in the TXV

Moisture frozen in the refrigerant circuit at an expansion valve must be melted away before the system can return to normal operation.

1. If the refrigeration system has a liquid receiver, pump down the refrigerant into the liquid receiver. This will make it easier to heat the expansion valve. If a liquid receiver is not present, shut down the system and let the TXV warm up to room temperature.
2. Turn off the system. Use lockout tags to ensure that no one accidentally turns on the system.
3. Gently warm the expansion valve with a heat gun or wrap a warm rag around the valve, **Figure 53-15**. Warming an expansion valve above 32°F (0°C) for a while will melt any frozen moisture inside. Never use a torch or any type of flame to warm a TXV.
4. Return any line and service valves to the proper positions for normal operation.
5. Remove lockout tags and turn on the system.
6. Monitor evaporator temperature and both low-side and high-side pressure. Normal refrigeration should return when operation resumes.

If moisture continues to be a problem in a system, perform this procedure but also install a new filter-drier before returning the system to normal operation. If the customer will allow an even more thorough service call, suggest recovering and dehydrating the system's entire refrigerant charge and pulling a vacuum on the entire system.

Restrictions from ice formation in valves may occur when a filter-drier is saturated with moisture and releases some back into the refrigerant.

Flushing a Dirty Expansion Valve

If the expansion valve is stuck open, there may be dirt on the needle. To remedy this, the valve may be flushed.

1. Cycle the refrigeration system on.
2. Alternately open and close either the liquid receiver service valve (LRSV) or the liquid line hand shutoff valve. This will cause surges of liquid to rush past the expansion valve needle, cleaning it and removing any stuck debris.
3. Monitor evaporator temperature and both low-side and high-side pressures. If a restriction was properly removed, normal operating characteristics should be measured.

If this procedure fails to remedy the TXV restriction, follow a procedure on replacing a clogged inlet screen. If the valve does not have an inlet screen, replace the TXV.

Copyright Goodheart-Willcox Co., Inc.

Replacing a Clogged Inlet Screen

A clogged inlet screen (strainer) can cause a system to operate poorly and eventually lead to equipment failure. Replace any clogged inlet screens with new, clean screens and replace a system's filter-drier.

1. Pump down the system.
2. Turn off and lock out system power.
3. Close any line valves possible to limit what parts of the system will be exposed to atmosphere.
4. Examine the system's TXV. Some TXVs have an easily removable inlet screen that is held in place with a bolt, **Figure 53-16**. Many of these may be removed without disconnecting the liquid line. Other TXVs have their inlet screens located just inside the inlet at the liquid line connection.
5. Replace the old, clogged screen with a new, clean screen or thoroughly clean as best as possible.
6. Reassemble the system parts. If the inlet screen was held in place with a bolt, discard the old gasket and install a new gasket.
7. A clogged inlet screen is an indication that the current liquid line filter-drier is beyond its point of usefulness and possibly beginning to disintegrate. It is a good idea to replace the liquid line filter-drier before restarting the system.
8. Close up the system and draw a vacuum on the parts of the system that were open to atmosphere during the replacement of the inlet screen.
9. After a satisfactory vacuum has been determined, check for and repair any leaks that may have previously gone unnoticed or developed during the replacement procedure.
10. Reopen the closed line valves and service valves, allowing refrigerant back into the rest of the system.
11. Undo the power lockout and restart the system.
12. Measure pressures and temperatures to ensure that normal operation has resumed.

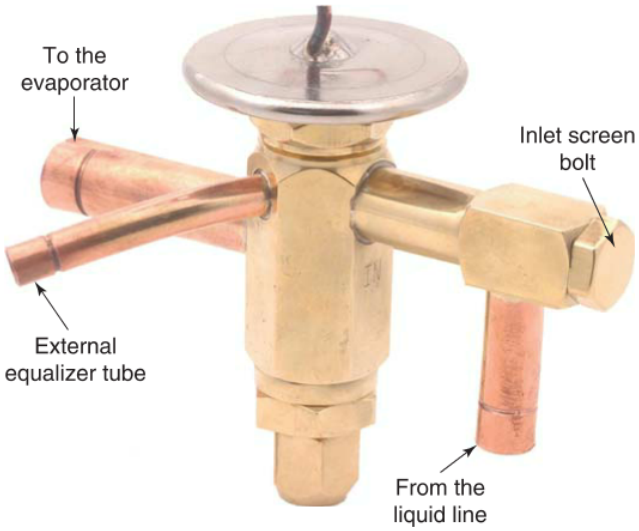

Emerson Climate Technologies

Figure 53-16. TXV with an inlet screen (strainer) that is easily removed for inspection and cleaning.

Inefficient Compressor

Another cause of low or no cooling in a refrigeration system may be an ***inefficient compressor***. A compressor becomes inefficient after its working parts have sustained wear and tear. The compressor develops a noticeably reduced pumping ability. Low-side pressure will be higher than normal, and high-side pressure will be lower than normal.

With an inefficient compressor, discharge pressure at the compressor outlet will be low, due to leaking valves; however, subcooling should be normal. Refrigerant will spend enough time in the condenser to condense and subcool.

Low-side pressure will be high, due to compressor vapor pushing back into the low side through leaking compressor inlet valves. Since not as much refrigerant is being pumped through the refrigerant metering device, the evaporator will be somewhat starved of refrigerant. The refrigerant that does pass into the evaporator will quickly evaporate and then absorb mostly sensible heat. This will result in high superheat but low total heat absorption. The diagram in **Figure 53-17** shows operating characteristics that apply to a system with an inefficient compressor. These characteristics are the same whether the refrigerant metering device is a TXV or a capillary tube.

Overcharged System with a Capillary Tube

An overcharged refrigeration system using a capillary tube as the refrigerant metering device will not be able to cool its conditioned space sufficiently. Excess refrigerant creates higher pressure throughout the system. Higher pressure liquid in the condenser will force a greater quantity of liquid refrigerant into the evaporator. Liquid refrigerant will accumulate and flood the evaporator, raising evaporator pressure and

Copyright Goodheart-Willcox Co., Inc.

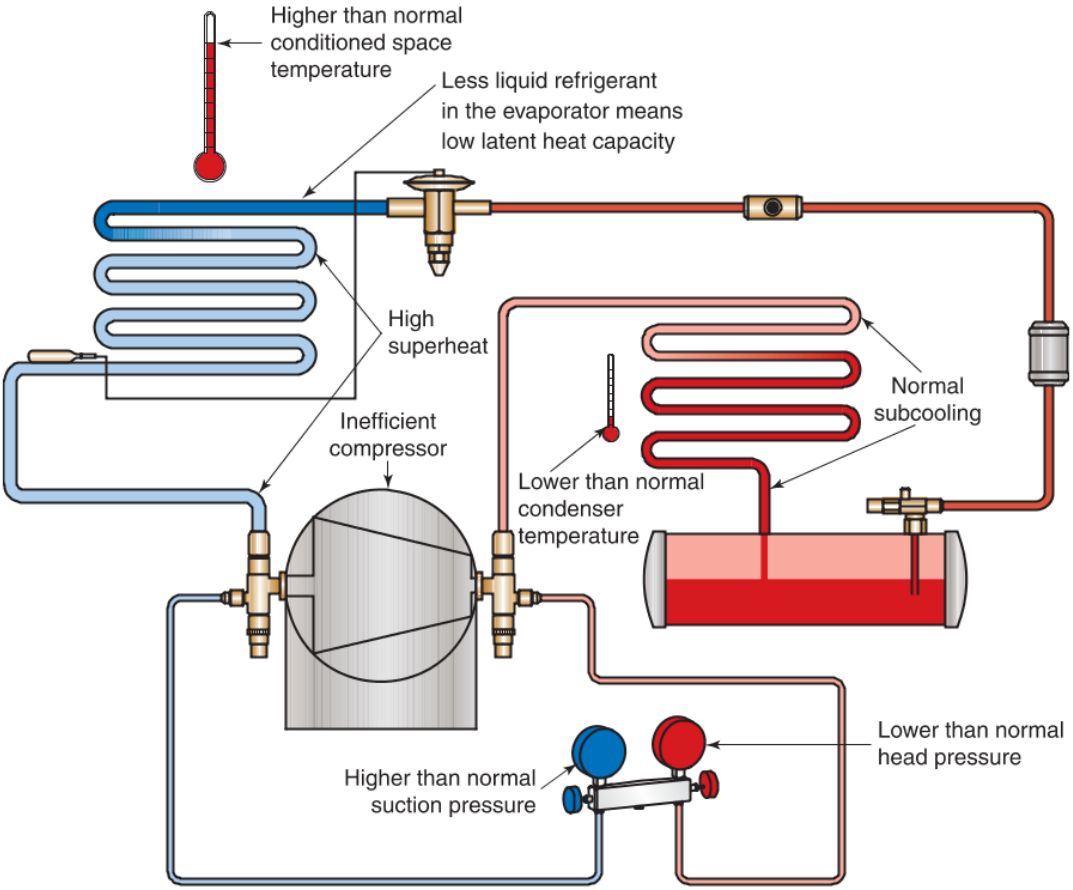

Goodheart-Willcox Publisher

Figure 53-17. A refrigeration system with an inefficient compressor will exhibit characteristics as shown in this diagram. These characteristics apply whether the refrigerant metering device is a TXV or a capillary tube.

temperature. Higher evaporator pressure and temperature will cause conditioned space temperature to be higher than normal. Liquid refrigerant pressure in the evaporator will be so high that there will be low or no superheat.

Excess refrigerant in the high side will cause high pressure in the condenser. The high pressure will raise condenser temperature higher than normal. The excess liquid refrigerant at higher temperature will result in higher subcooling. Review overcharge characteristics in a capillary tube system diagram in **Figure 53-18**.

Overcharged System with a Thermostatic Expansion Valve (TXV)

An overcharged refrigeration system using a thermostatic expansion valve (TXV) as the refrigerant metering device may not be able to cool its conditioned space sufficiently. Excess refrigerant creates higher pressure on the high side. Unlike a system with a capillary tube, a system with a TXV can better hold back the higher pressure of liquid refrigerant pushing its way into the evaporator. The TXV will do its best to meter refrigerant into the evaporator based on superheat. The superheat should remain normal; however, high-side pressure will be above normal and pushing more liquid refrigerant into the evaporator than normal. This will raise evaporator pressure and temperature somewhat. However, this all depends on the amount of overcharge and the operation of the thermostatic expansion valve.

With the TXV holding back much of the liquid-line refrigerant, the bulk of the overcharge will remain on the high side. Much of it will be in the liquid receiver, though there may be enough to flood much of the condenser. An overcharge of refrigerant raises condenser temperature and head pressure. Since refrigerant is crowded and not moving as much as normal, it will have enough time to subcool in ambient air. An overcharged system will have higher than normal subcooling. Review

Copyright Goodheart-Willcox Co., Inc.

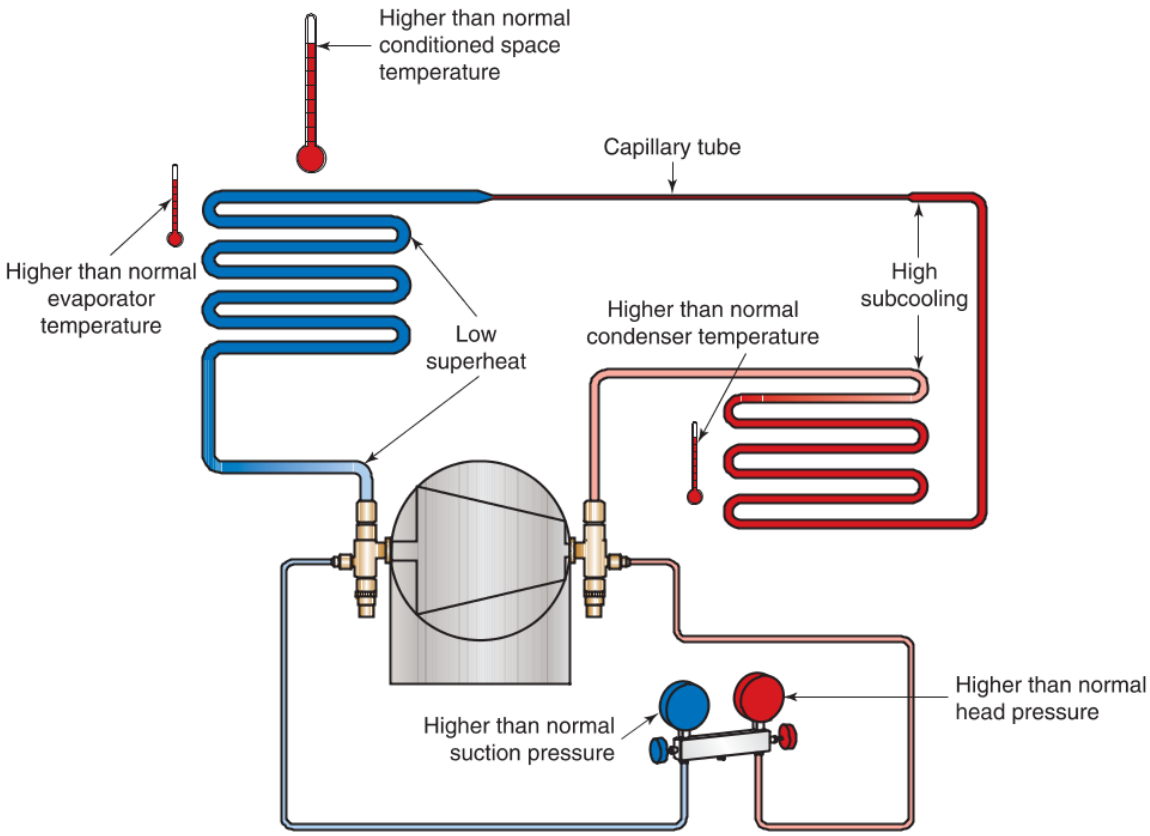

Goodheart-Willcox Publisher

Figure 53-18. An overcharged refrigeration system with a capillary tube as its refrigerant metering device will exhibit characteristics as shown in this diagram.

overcharge characteristics in a TXV system diagram in **Figure 53-19**.

High-Side Restriction

A restriction can develop in any part of a system's refrigerant circuit. Determining its location depends on noticing the symptoms that do not correspond with normal operation and isolating the cause. With a restriction on the high side, a technician will first notice that the conditioned space is not cooling well and will be above its normal temperature. Evaporator temperature and pressure will be lower than normal. Superheat will be high.

High superheat and high conditioned space temperature indicate that the evaporator is starved and is not getting enough refrigerant. A system using a TXV should be responding to these conditions by opening wider to allow in more liquid refrigerant to lower the superheat. Perhaps the TXV is out of calibration or the sensing bulb is poorly installed. Perhaps something further upstream is restricting refrigerant flow. In any case, less liquid refrigerant in the evaporator means less heat will be absorbed from the conditioned space.

With less heat being absorbed in the evaporator, less heat is transferred to the condenser. Head pressure and condenser temperature should be lower than normal. Subcooling should be normal. If this is the case, then the restriction should be somewhere along the liquid line.

Pro Tip

High-Side Restrictions

There are only a few places upstream of a liquid line for a high-side restriction to develop. If it occurs at the inlet to the liquid receiver, three measurements will be higher than normal: head pressure, condenser temperature, and subcooling. However, most high-side restrictions occur along the liquid line where more inline components are installed, and there is a greater chance of a restriction.

Measure, record, and compare two temperatures: the condenser condensate line (outlet tubing)

Copyright Goodheart-Willcox Co., Inc.

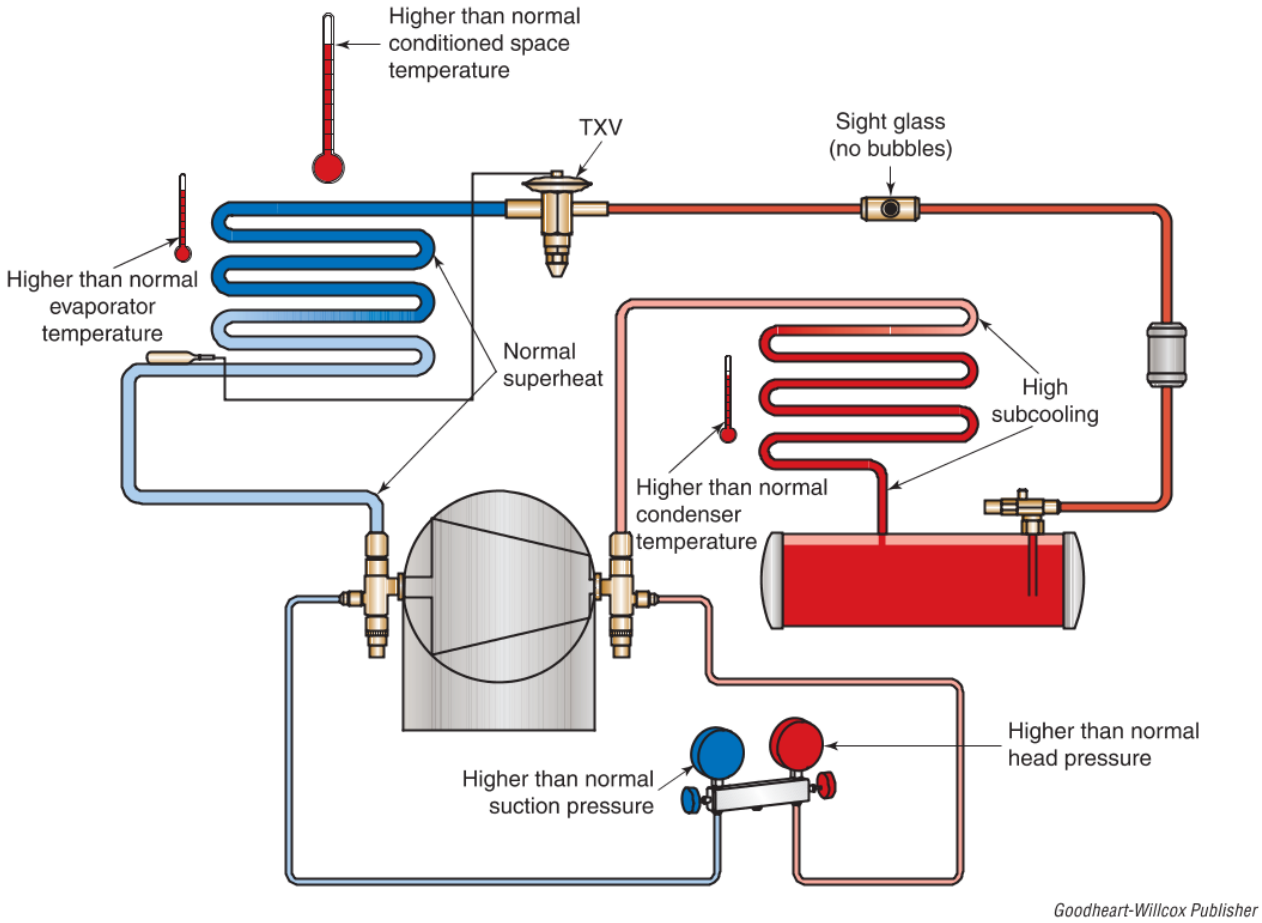

Figure 53-19. An overcharged refrigeration system with a thermostatic expansion valve as its refrigerant metering device will exhibit characteristics as shown in this diagram.

and the end of the liquid line connected to the TXV. If these temperature values are close, then the problem may be the TXV. However, if there is a significant temperature difference, then the problem should be somewhere between these two points along the liquid line. To confirm this, check the sight glass, which should show bubbles from refrigerant evaporating in the liquid line.

Examine the liquid line for any obvious restrictions, such as kinks or sharp bends in tubing. Use an electronic thermometer to measure the temperature before and after any valves, filter-driers, sight glasses, and other tubing connections or bends. A temperature drop between two points will indicate a pressure drop, which will be the restriction. Review the characteristics of a refrigeration system with a restriction in the liquid line in the diagram in **Figure 53-20**.

Pro Tip

High-Side Restriction in a Capillary Tube System

If a refrigeration system with a capillary tube as its refrigerant metering device has a restriction on its high side, it will have different system characteristics than a system using a TXV. The restriction will most likely be along the liquid line. Like the TXV system, a capillary tube system will have an above normal conditioned space temperature, a low suction pressure, and a low evaporator temperature. However, it will have a high condenser temperature, high head pressure, and high subcooling. These are the same characteristics as a TXV system that has a restriction between the condenser and liquid receiver.

Low-Side Restriction

A restriction on the low side of a refrigeration system may develop somewhere along the suction

Copyright Goodheart-Willcox Co., Inc.

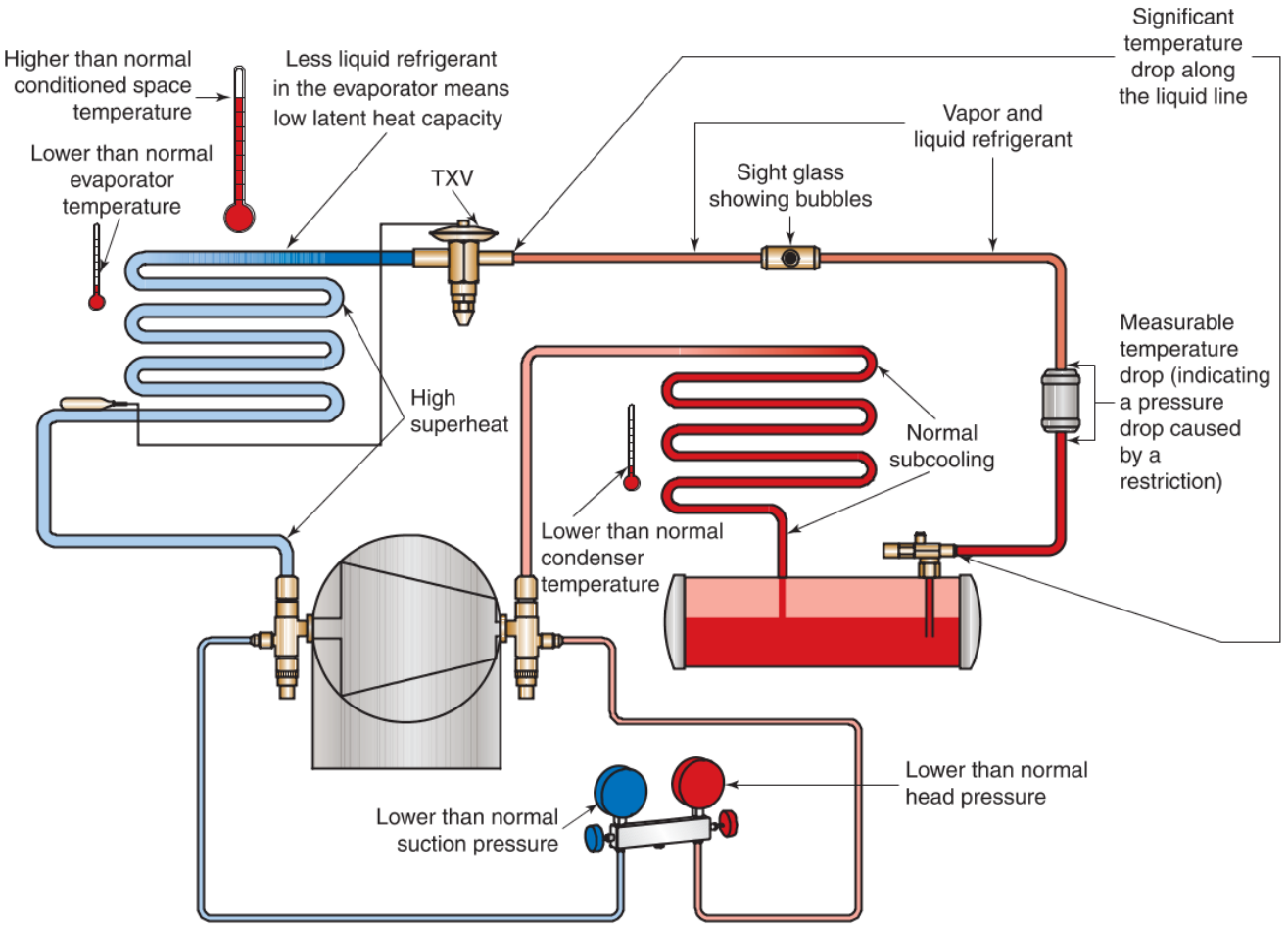

Goodheart-Willcox Publisher

Figure 53-20. A refrigeration system using a TXV as its refrigerant metering device and having a restriction in the liquid line will exhibit characteristics as shown in this diagram. Taking a temperature survey throughout the length of the liquid line will reveal the location of the restriction.

line. This restriction will reduce the evaporator's cooling capacity, as it will hold back refrigerant, causing it to accumulate in the evaporator. This will increase evaporator pressure and temperature, which will raise the conditioned space temperature above normal. The TXV will try to stabilize superheat by holding back liquid refrigerant from the liquid line. Depending on how well the TXV pushes back against head pressure, superheat could be normal or low.

Often, a restriction on the low side is caused by a clogged suction line filter-drier. While evaporator pressure will be above normal, suction pressure (read by the suction service valve on the compressor) will be low (a vacuum). Condenser temperature and head pressure will be below normal. If the system has a proper refrigerant charge, subcooling should be normal. Review the characteristics of a refrigeration system with a restriction in the suction line in the diagram in **Figure 53-21**.

53.3.2 Normal to Excessive Refrigeration—Motor Running Continuously

Sometimes when a compressor runs continuously, a system will produce normal or too much refrigeration. The probable cause of the trouble is a faulty motor control.

Place a gauge manifold on the system and monitor conditioned space temperature. Check that the motor control is cutting out the compressor at the set point pressure and that this pressure corresponds to the desired evaporator case temperature.

Remember, there is a relationship between the control cut-out point and the low-side evaporating pressure. The control cannot stop a compressor's motor if the setting is lower than the evaporating pressure.

Copyright Goodheart-Willcox Co., Inc.

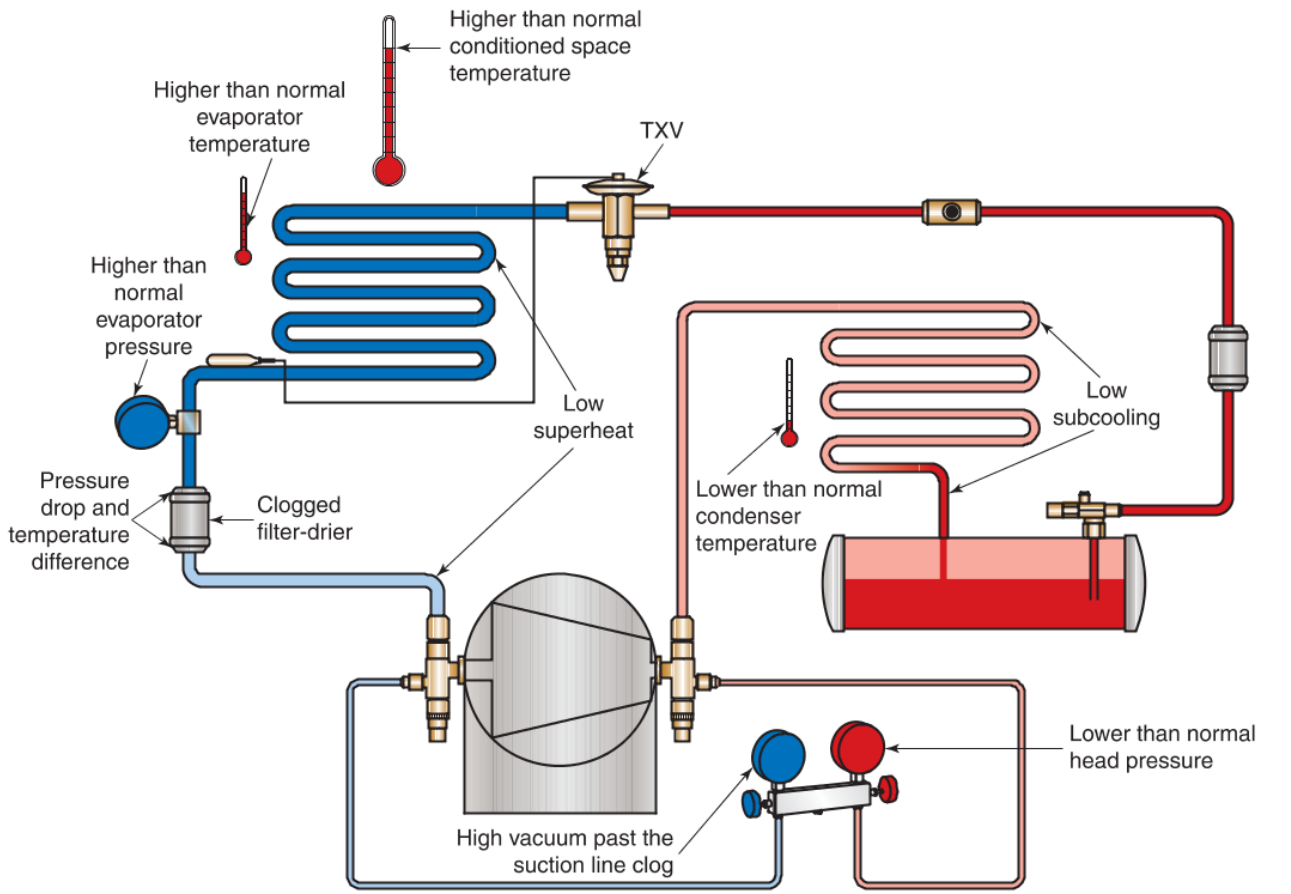

Goodheart-Willcox Publisher

Figure 53-21. A refrigeration system using a TXV as its refrigerant metering device and having a restriction in the suction line will exhibit characteristics as shown in this diagram.

A service technician should also check that the unit is not being overloaded. Examples include excessive door openings, placement of hot foods in the refrigerated space, and a faulty air curtain.

53.3.3 Low to Normal Refrigeration—Longer Than Normal Run Time

Some refrigeration systems take a longer than normal time to cool products in their conditioned space. This may happen gradually after years of operation, it may develop soon after a refrigeration system has been serviced. A likely cause of this condition is the presence of noncondensables trapped in the condenser.

Noncondensables flow through the refrigerant circuit until they reach the condenser. Liquid refrigerant typically blocks noncondensables from entering the liquid line. As a result, noncondensables become trapped in a system's condenser. They occupy part of the condenser where hot-gas refrigerant should be expelling heat. With less space in which to reject heat, condenser temperature and head pressure both rise. The compressor must work harder to push against the increased head pressure. The compressor's motor pulls more amps, consuming more electrical power than normal. Since noncondensables in the refrigerant circuit cause above average energy consumption by the compressor and less than normal heat rejection in the condenser, overall system efficiency decreases.

Noncondensables in a Capillary Tube System

Noncondensables trapped in the condenser of a capillary tube system increase head pressure and condenser temperature. The rise in condenser temperature increases subcooling. The higher head pressure pushes more liquid refrigerant through the capillary tube into the evaporator than normal.

Copyright Goodheart-Willcox Co., Inc.

A capillary tube is a fixed pressure drop device that is intended to work with a limited incoming pressure. It cannot hold back against higher pressure caused by noncondensables in the condenser. The increased liquid refrigerant floods the evaporator. It also raises suction pressure. With so much extra refrigerant, superheat is low, as not all the refrigerant can evaporate. Review these characteristics in the system diagram in **Figure 53-22**.

Noncondensables in a TXV System

Noncondensables trapped in the condenser of a TXV system produce many of the same effects as in a capillary tube system. They will occupy part of the condenser surface area, reducing a condenser's ability to reject heat. This will raise head pressure and condenser temperature. Subcooling will also be high.

A TXV is better than a capillary tube at holding back the high head pressure pushing from the liquid line. However, a TXV's spring may not be able to withstand fully the increased head pressure, and more liquid refrigerant than normal may enter the evaporator. Liquid refrigerant may even flood the evaporator. In either case, suction pressure and evaporator temperature will be higher than normal. The conditioned space temperature will probably be higher than normal. Review these characteristics in the system diagram in **Figure 53-23**.

Servicing a System with Noncondensables Trapped in the Condenser

Unfortunately, refrigeration systems containing noncondensables trapped in the condenser exhibit symptoms similar to an overcharged system or a condenser with restricted airflow. The subcooling caused by noncondensables is higher than subcooling caused by a refrigerant overcharge or restricted condenser airflow. However, differences in system application and variable outside factors make it difficult to establish exact numbers to distinguish which condition is responsible.

The quickest way to determine whether a system's condenser contains noncondensables is to

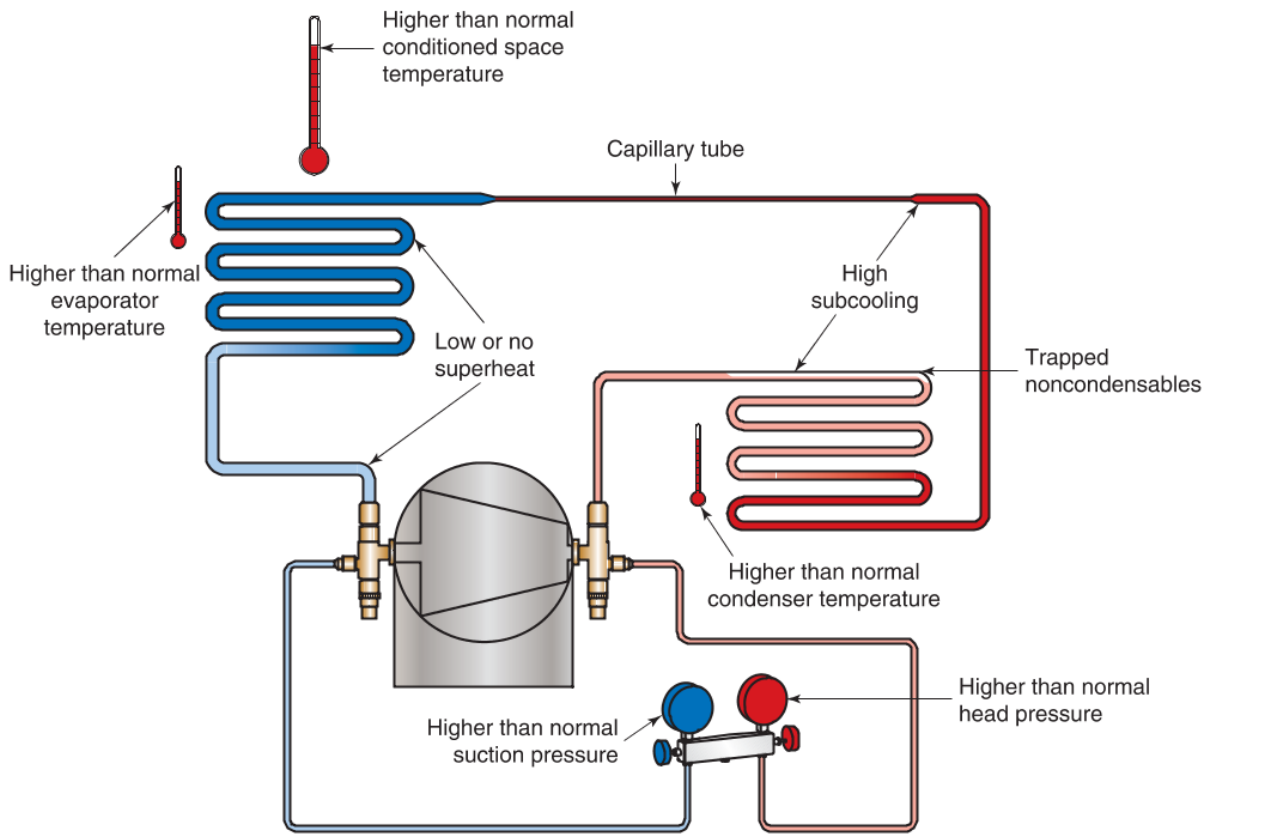

Goodheart-Willcox Publisher

Figure 53-22. A refrigeration system using a capillary tube as its refrigerant metering device and having noncondensables trapped in its condenser will exhibit characteristics as shown in this diagram.

Copyright Goodheart-Willcox Co., Inc.

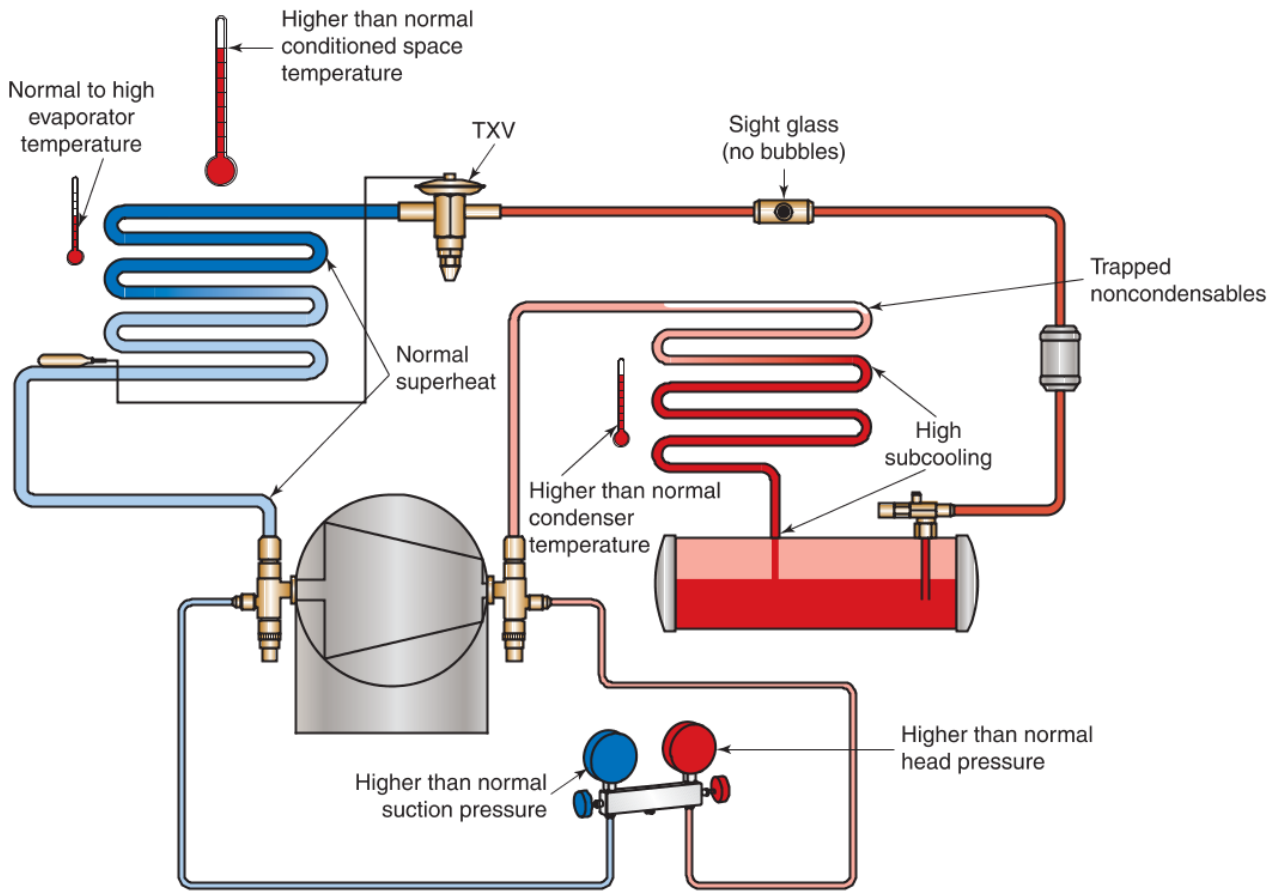

Goodheart-Willcox Publisher

Figure 53-23. A refrigeration system using a TXV as its refrigerant metering device and having noncondensables trapped in its condenser will exhibit characteristics as shown in this diagram.

measure and monitor head pressure after shutting off the system. Since condenser refrigerant continues to expel heat into ambient air during the Off cycle, head pressure drops in a continuous, gradual manner after shutdown. With noncondensables present, head pressure does not drop immediately. If head pressure remains constant for several minutes, noncondensables are probably trapped in the condenser. To accelerate this process, use a jumper to wire the condenser fans to run even after the compressor cuts out.

A more precise way of checking for noncondensables trapped in the condenser is to compare measurements with a P/T (pressure-temperature) chart. To service a refrigeration system with noncondensables trapped in the condenser, recover the refrigerant, pull a vacuum, and weigh in an exact refrigerant amount.

Quick Check for Trapped Noncondensables

1. Connect a gauge manifold to the refrigeration system.
2. Cycle on the compressor for several minutes to allow the system to reach normal operating conditions.
3. After levels have stabilized, write down system measurements for your records and to use in comparison after service procedures:
   - Suction pressure: _____ psi.
   - Head pressure: _____ psi.
   - Evaporator temperature: _____ °F/_____ °C.
   - Condenser temperature: _____ °F/_____ °C.

Copyright Goodheart-Willcox Co., Inc.

- Superheat: _____ °F/_____ °C.
- Subcooling: _____ °F/_____ °C.
- Temperature in the conditioned space: _____ °F/ _____ °C.
- Bubbles in the sight glass: Yes _____ No _____.

4. Use a jumper wire as a temporary method of keeping the condenser fans running during the Off cycle.
5. Cycle off the compressor.
6. Check the condenser to ensure that condenser fans are still operating during the Off cycle.
7. Monitor head pressure levels for the next several minutes. Did head pressure begin to decline steadily after the compressor cycled off? _____
   - If yes, head pressure did steadily decline after compressor shutdown, then any measurements out of the ordinary were probably caused by an overcharge of refrigerant or restricted airflow through the condenser. There probably are not any noncondensables trapped in the condenser. Pursue other possible causes of high system measurements.
   - If no, the head pressure remained at the same level for several minutes after compressor shutdown, then any measurements out of the ordinary were probably caused by noncondensables trapped in the condenser. Perform the following steps:
8. Recover the refrigerant using inline filter-driers.
9. Pull a vacuum on the system to remove any noncondensables.
10. Charge the system with the exact amount of refrigerant recommended by the manufacturer.
11. Cycle the system on for a while and allow enough time for the conditioned space to return to normal temperature levels.
12. After the conditioned space is at its normal temperature, measure system characteristics, record them below, and then compare with previously recorded measurements:
    - Suction pressure: _____ psi.
    - Head pressure: _____ psi.
    - Evaporator temperature: _____ °F/_____ °C.
    - Condenser temperature: _____ °F/_____ °C.
    - Superheat: _____ °F/_____ °C.
    - Subcooling: _____ °F/_____ °C.
    - Temperature in the conditioned space: _____ °F/ _____ °C.
    - Bubbles in the sight glass: Yes _____ No _____.
13. Keep one copy of these normal operation measurements in your company files and leave another copy with this system.

P/T Chart Check for Trapped Noncondensables

1. Connect a gauge manifold to the refrigeration system.
2. Cycle on the compressor for several minutes to allow the system to reach normal operating conditions.
3. While waiting for system levels to stabilize, check labels and system records to determine which refrigerant is used in this system. Write down the type of refrigerant: _____. This information will be used in later steps of this procedure.
4. After levels have stabilized, write down system measurements for your records and to use in comparison after service procedures:
   - Suction pressure: _____ psi.
   - Head pressure: _____ psi.
   - Evaporator temperature: _____ °F/_____ °C.
   - Condenser temperature: _____ °F/_____ °C.
   - Superheat: _____ °F/_____ °C.
   - Subcooling: _____ °F/_____ °C.
   - Temperature in the conditioned space: _____ °F/ _____ °C.
   - Bubbles in the sight glass: Yes _____ No _____.
5. Use a jumper wire as a temporary method of keeping the condenser fans running during the Off cycle. This will more quickly bring condenser temperature down to ambient temperature.
6. Cycle off the compressor.
7. Check the condenser to ensure that condenser fans are still operating during the Off cycle.
8. Measure and record ambient temperature: _____ °F/_____ °C.

Copyright Goodheart-Willcox Co., Inc.

9. Monitor the temperature of the condenser inlet and outlet tubing. Wait until these parts of the system are equal to ambient temperature.
10. Once condenser inlet and outlet tubing have dropped to ambient temperature, read and record head pressure on the high-pressure gauge: _____ psi.
11. Consult a pressure-temperature (P/T) chart to find the condensing temperature that corresponds to the head pressure reading: _____ °F/ _____ °C. Refer to Chapter 9, *Introduction to Refrigerants*, and the *Appendix* for various P/T charts. Be sure to use the proper row and column for the type of refrigerant used in this system.
12. Compare ambient temperature and the P/T chart's condensing temperature that corresponds to the head pressure reading. Are these numbers the same? _____
    - If yes, the condensing temperature and ambient temperature are equal, then noncondensables are not trapped in the condenser. Any high or low system measurements are a result of some other cause. Pursue other possible causes of high system measurements.
    - If no, the condensing temperature and ambient temperature are different, then noncondensables are trapped in the condenser. Perform the following steps:
13. Recover the refrigerant using inline filter-driers.
14. Pull a vacuum on the system to remove any noncondensables.
15. Charge the system with the exact amount of refrigerant recommended by the manufacturer.
16. Cycle the system on for a while and allow enough time for the conditioned space to return to normal temperature levels.
17. After the conditioned space is at its normal temperature, measure system characteristics, record them below, and then compare with previously recorded measurements:
    - Suction pressure: _____ psi.
    - Head pressure: _____ psi.
    - Evaporator temperature: _____ °F/_____ °C.
    - Condenser temperature: _____ °F/_____ °C.
    - Superheat: _____ °F/_____ °C.
    - Subcooling: _____ °F/_____ °C.
    - Temperature in the conditioned space: _____ °F/ _____ °C.
    - Bubbles in the sight glass: Yes _____ No _____.
18. Keep one copy of these normal operation measurements in your company files and leave another copy with this system.

Reduced Condenser Efficiency

An air-cooled condenser's job is to reject heat from its circulating refrigerant into ambient air. Its efficiency can be reduced multiple ways. Dirt or debris can accumulate on condenser fins and tubing and act as an insulator, reducing heat transfer. Objects can become lodged in condenser airflow passageways, reducing or stopping the flow of air, which limits heat transfer. Condenser fan blades can become damaged and move less air. Condenser fan motors can burn out and stop operating. Probably the most common cause of reduced condenser efficiency is the accumulation of dirt and grime on condenser tubes and fins.

A capillary tube system with reduced condenser efficiency will have higher head pressure and higher condenser temperature. However, subcooling will remain normal, as there will still be enough condenser surface area to subcool. This would not be the case with an overcharge of refrigerant or noncondensables trapped in the condenser.

The higher head pressure will force more liquid refrigerant through the capillary tube into the evaporator. This will somewhat flood the evaporator and raise suction pressure. Not all the excess refrigerant will be able to evaporate, so there will be no or low superheat. Conditioned space temperature will be higher than normal. Review system characteristics of a capillary tube system with reduced condenser efficiency in **Figure 53-24**.

Like a capillary tube system, a TXV system with reduced condenser efficiency will have higher head pressure and condenser temperature. Also, subcooling should remain normal. The higher head pressure will push harder against the TXV. The TXV's spring will only be able to hold back head pressure to a certain extent. More liquid refrigerant than normal will probably enter the evaporator.

Superheat will depend on head pressure and the TXV's response to it. If the TXV is strong enough, superheat will remain normal. If higher head pressure overcomes the TXV, then superheat will drop. In general, as

Copyright Goodheart-Willcox Co., Inc.

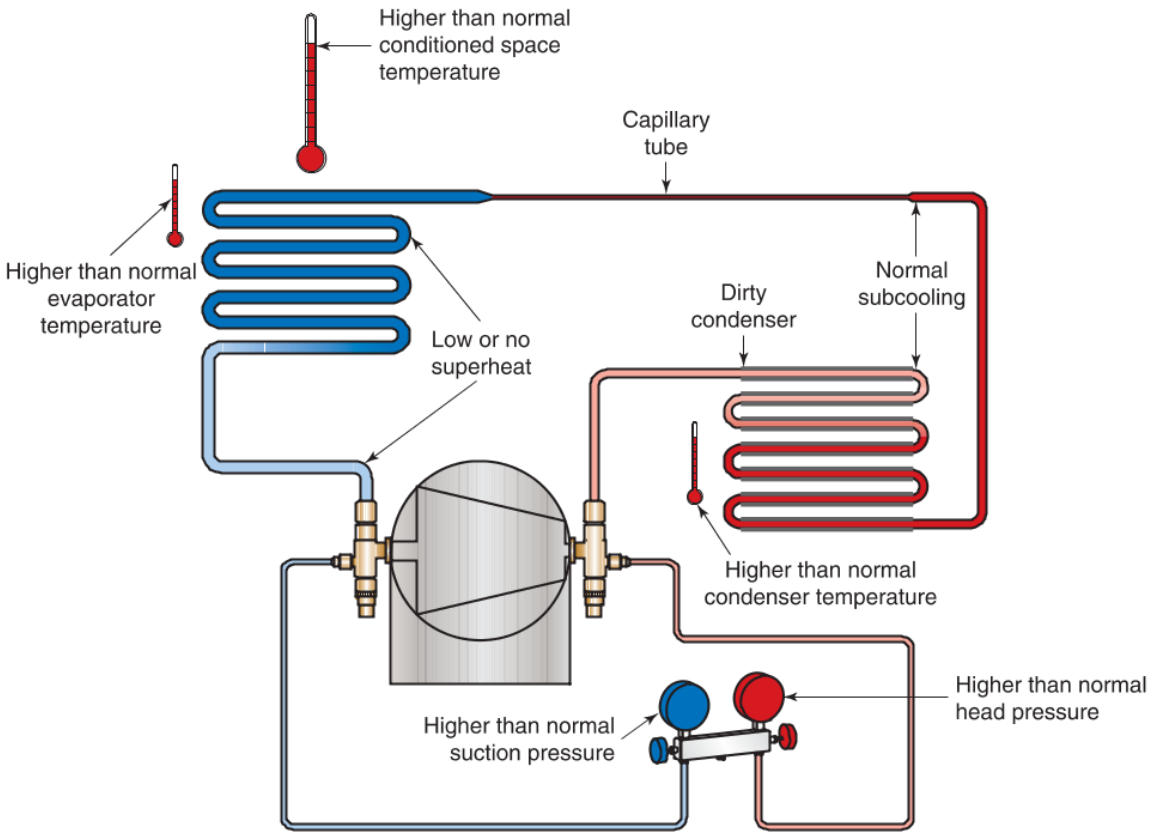

Goodheart-Willcox Publisher

Figure 53-24. A refrigeration system using a capillary tube as its refrigerant metering device and having reduced condenser efficiency will exhibit characteristics as shown in this diagram.

Service Call Scenario

53C: Walk-In Freezer—No Cooling

Customer Complaint: No Cooling

Possible Causes: Defective potential relay, defective start capacitor, shorted compressor windings.

Description of Problem: Mr. Delano, the owner of a restaurant, has reported that the walk-in freezer, which is used to store meat, is no longer cooling. Prior to arriving at the jobsite, the technician, Jessica, reviews the work order. Upon arriving at the restaurant, she identifies herself to Mr. Delano and listens carefully to his comments.

Testing: Jessica places the refrigeration unit in the cooling mode and observes its operation. She installs the gauge manifold to read the pressures. She notes that the compressor is humming but not starting. This is an indication that the problem is most likely in the compressor circuit. Jessica then checks the start capacitor and the potential relay. The microfarad rating of the start capacitor is confirmed to be within the normal range. The electrical source to the unit is turned off and the potential relay is checked with an ohmmeter. The contacts and coil of the potential relay are checked for resistance and it is noted that the coil is opened. This indicates that the coil is defective. Jessica informs Mr. Delano that the potential relay is defective and must be replaced. Mr. Delano agrees to have Jessica replace the potential relay.

Solution: After installing a new potential relay, Jessica starts the system. She notes all components are now operating satisfactorily. The unit's pressures and temperatures are all within normal ranges. Jessica then provides Mr. Delano with the bill and informs him that a follow-up call will occur.

Safety: Remember to bleed the electrical charge of a start capacitor before handling and performing a microfarad reading. The charge stored in the capacitor may hold a very high voltage spark. Some start capacitors are not equipped with a bleed resistor that assists in dissipating the charge.

Copyright Goodheart-Willcox Co., Inc.

head pressure increases, superheat decreases. As superheat decreases, evaporator temperature increases. As evaporator temperature increases, conditioned space temperature increases. These examples show cascading effect of reduced condenser efficiency and the importance of regularly cleaning condensers. Review system characteristics of a TXV system with reduced condenser efficiency in **Figure 53-25**.

Reduced Evaporator Efficiency

The job of a refrigeration system's evaporator is to absorb heat from the conditioned space into the system's refrigerant. Its efficiency can be reduced multiple ways. Dust can accumulate on evaporator fins and tubing and act as an insulator, reducing heat transfer. Ice and frost formation can block airflow and insulate the refrigerant from the heat of the circulating air. Air filters can become dirty and clogged, reducing airflow. Blower motors can burn out and stop operating.

A capillary tube refrigeration system with reduced evaporator efficiency will have lower suction pressure and a lower evaporator temperature. This is due to less heat being absorbed, which will allow conditioned space temperature to rise above normal. With less heat absorbed, there will be no or low superheat.

The reduced heat load will allow head pressure and condenser temperature to drop below normal. As long as the refrigerant charge is adequate, subcooling will be normal. Review system characteristics of a capillary tube refrigeration system with reduced evaporator efficiency in **Figure 53-26**.

A TXV refrigeration system with reduced evaporator efficiency will have a somewhat lower suction pressure and evaporator temperature. The TXV will be reacting to the reduced heat absorption to maintain a normal superheat.

With reduced heat absorbed in the evaporator, head pressure and condenser temperature will be below normal. If the system is properly charged, subcooling will be normal. Review system characteristics of a TXV refrigeration system with reduced evaporator efficiency in **Figure 53-27**.

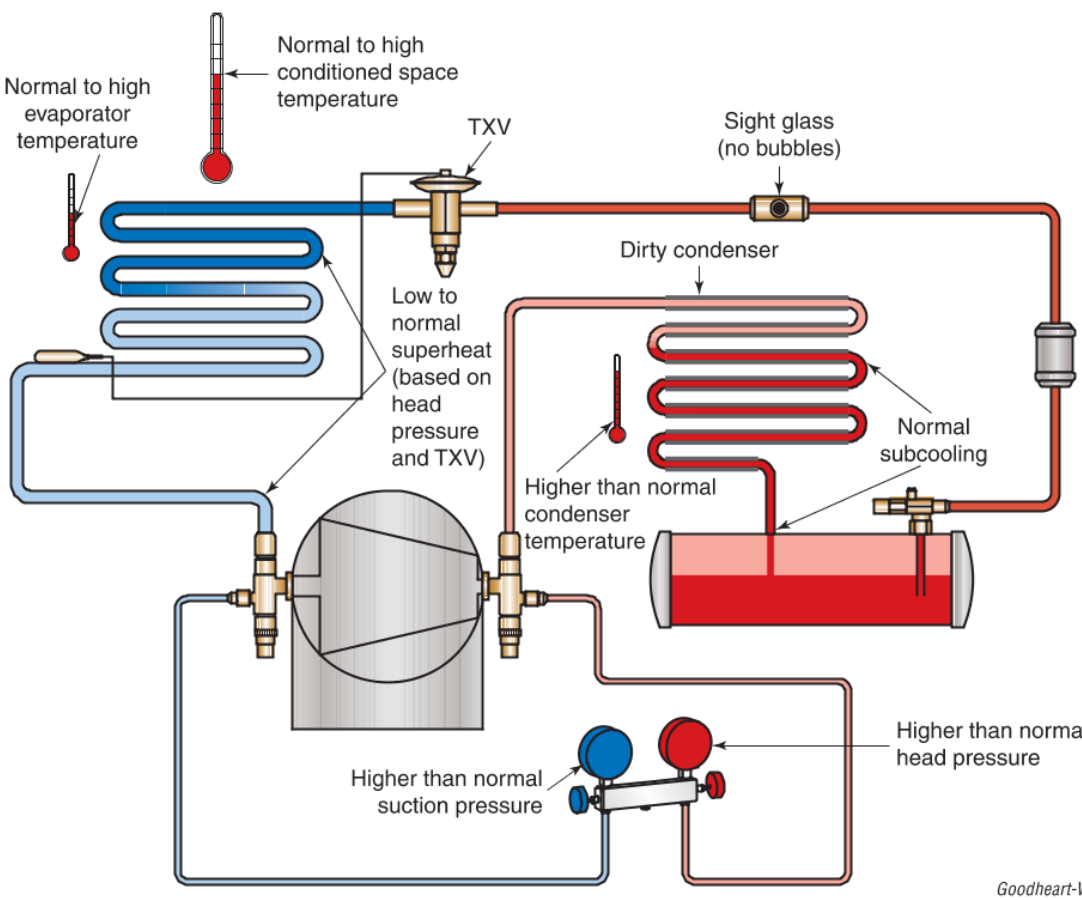

Goodheart-Willcox Publisher

Figure 53-25. A refrigeration system using a TXV as its refrigerant metering device and having reduced condenser efficiency will exhibit characteristics as shown in this diagram.

Copyright Goodheart-Willcox Co., Inc.

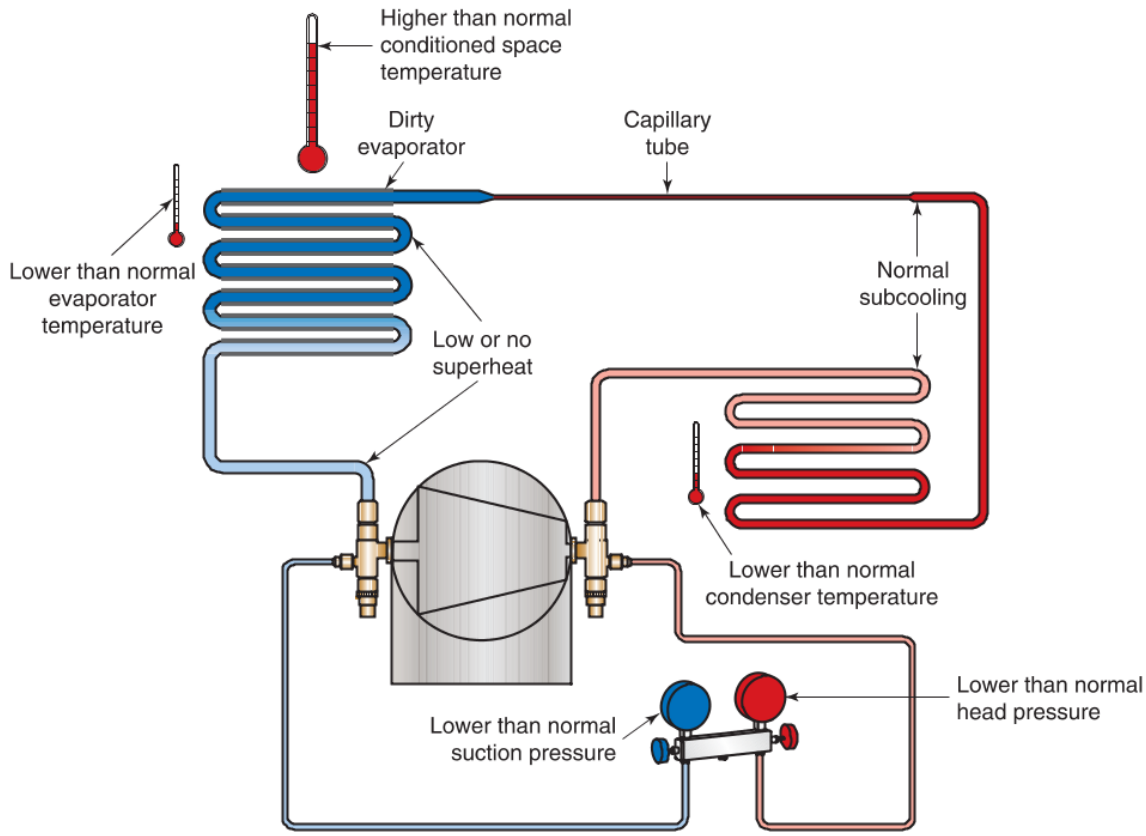

Goodheart-Willcox Publisher

Figure 53-26. A refrigeration system using a capillary tube as its refrigerant metering device and having reduced evaporator efficiency will exhibit characteristics as shown in this diagram.

53.3.4 No Refrigeration—Unit Does Not Run

With no cooling and the refrigeration system not running, the trouble may be in the electrical circuit. Use a test light or a voltmeter to check whether power is being supplied to the compressor or condensing unit.

If there is power, a compressor's motor may be burned out or the circuit open. Disconnect power from the motor. Test it with a voltmeter to ensure that power is disconnected. Review the various procedures in Chapter 16, *Electrical Control Systems*, and Chapter 17, *Servicing Electric Motors and Controls*, such as checking relays, checking hermetic motor windings, and finding unwanted voltage drops.

With power turned off and wiring disconnected, use an ohmmeter (set to its lowest setting of R × 1, if an option) to test the resistance between the motor windings and the shell of the compressor or motor. If the reading is at 0 Ω or some other low-resistance value, there is a short to ground. Review the megohmmeter and insulation test procedures in Chapter 17, *Servicing Electric Motors and Controls*, for more motor testing information.

An ineffective temperature control may prevent the motor from starting. An ineffective temperature control might have a leaking power element (a bellows or diaphragm). It may also have a broken spring.

Further circuit checking may show a manual switch or overload in the open or Off position. Otherwise, an internal overload switch may be open. Internal overload switches cannot be manually reset. They reset automatically after cooling down for a period of time. Become familiar with a system's safety switches. This will allow you to quickly check manual resets and know when to wait for internal overloads.

If a compressor's motor is hot, this may indicate electrical trouble. The motor windings should be checked for a short with an ohmmeter. If the problem is an internal or external overload, allow the compressor time to cool off. Once the compressor can be

Copyright Goodheart-Willcox Co., Inc.

Service Call Scenario

53D: Walk-In Freezer—No Cooling

Customer Complaint: No Cooling

Possible Causes: Faulty circuit breaker, grounded compressor, locked compressor.

Description of Problem: Mrs. Cohen, the owner of a small neighborhood grocery store, has reported that her walk-in freezer is not cooling. Prior to arriving at the jobsite, Seth, the technician, reviews the work order. Upon arriving at the store, he identifies himself to Mrs. Cohen and listens carefully to her comments. Mrs. Cohen says that the unit keeps shutting off and tripping the circuit breaker when she attempts to restart the unit.

Testing: Seth observes the unit in operation. He notes that the compressor is very hot to the touch. With the electrical power off and the compressor wiring isolated, Seth checks the resistance across the compressor terminals. The resistance readings indicate that the compressor windings are grounded. Seth concludes that the compressor will need to be replaced. He informs Mrs. Cohen of the issue and offers solutions and the costs for such. Mrs. Cohen agrees to have Seth perform the needed service.

Solution: Seth recovers all refrigerant from the system. He removes the faulty compressor from the unit. Seth installs a new compressor as well as new filter-driers. A new capacitor and potential relay are installed to match the new compressor. With the system having been evacuated and recharged to manufacturer's specifications, all system pressures and temperatures are now within the normal range. Seth confirms the system is now cooling. Seth provides Mrs. Cohen with the bill and informs her that a follow-up call will occur.

Safety: Over time, some system's lubrication may have become acidic and toxic. Eye and hand protection should be used when replacing major components. It is good practice to recover the system's refrigerant into an acceptable recovery tank in the event the refrigerant is contaminated.

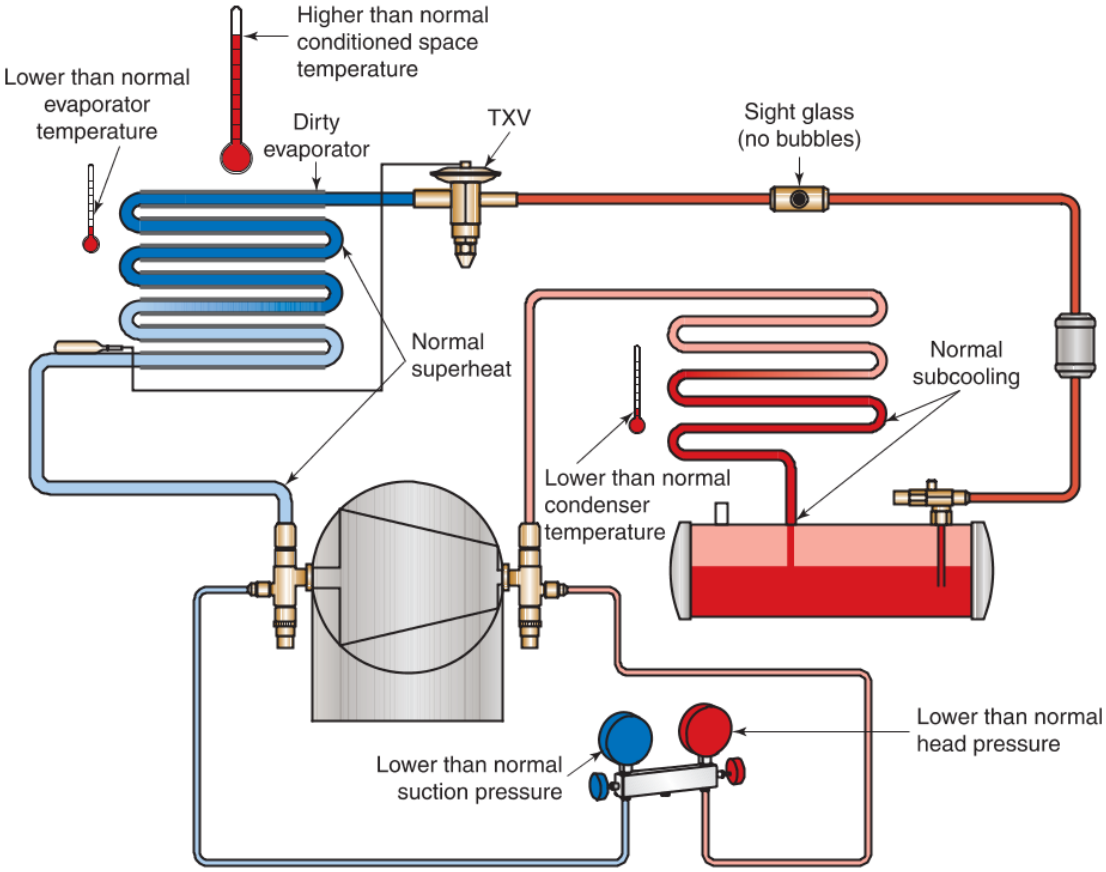

Goodheart-Willcox Publisher

Figure 53-27. A refrigeration system using a TXV as its refrigerant metering device and having reduced evaporator efficiency will exhibit characteristics as shown in this diagram.

Copyright Goodheart-Willcox Co., Inc.

restarted, use a clamp-on ammeter to check the starting amps and running amps. Compare these measurements with those values provided by the manufacturer, **Figure 53-28**.

Check the source voltage to make sure that the unit is receiving proper power. Review electrical measurements to make sure that the compressor is within the manufacturer's specifications. Continuously drawing too much current is a sign that the motor may have an internal mechanical or electrical problem.

53.3.5 Short Cycling

Short cycling means that a refrigeration system stops and starts too frequently. A short-cycling system will cycle off and cycle back on after a very short amount of time. It is necessary to locate the control or controls that are turning the system on and off. Note that one set of controls may cycle on the compressor and a different set of controls may cycle off the compressor. Review system measurements to determine which controls may be responsible. Controls that may cause short cycling include the following:

- Temperature controls.
- Low-pressure controls.
- Overload controls.
- High-pressure safety controls.
- Oil pressure safety controls.

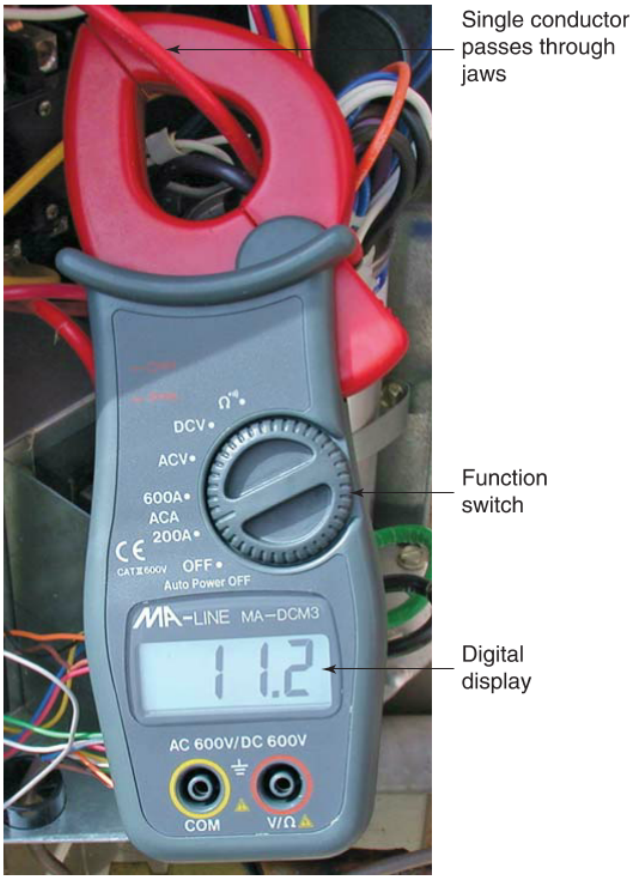

York International Corp.

Figure 53-28. A clamp-on ammeter is clamped around only one conductor of a particular circuit to measure the conductor's current draw.

Temperature Controls

A temperature control (thermostat) cycles on a compressor when a conditioned space requires cooling. This temperature control calls for cooling based on the temperature of one of the following:

- Return air (conditioned space temperature).
- Supply air.
- Evaporator.
- Suction line.

A technician should check and test the settings of a temperature control. Often a temperature control with a small differential causes short cycling. Increase the range of the differential and monitor pressures and evaporator temperatures to ensure proper system cycling. Ensure that a temperature control's sensing bulb is properly placed and mounted for accurate readings.

Low-Pressure Controls

Rapid pressure rise may occur on the low side when an expansion valve leaks, allowing high-side refrigerant to pass into the evaporator during the Off cycle. Review earlier coverage of diagnosis and remedies for common TXV problems. Two likely causes of a leak are loose contaminants and ice formation. Sometimes a foreign particle circulating with the refrigerant becomes lodged in an expansion valve. Sometimes a small amount of moisture is released from a filter-drier. This moisture circulates with the refrigerant and can freeze on the expansion valve. A small particle or ice formation can prevent an expansion valve from closing completely. Below is a summary of how this affects a refrigeration system.

After the compressor cycles off as usual, the TXV responds to the pressure change by closing its valve. However, this TXV cannot close completely due to the ice formation or lodged particle. As a result, liquid refrigerant quickly fills the evaporator. The liquid refrigerant entering the evaporator raises pressure quickly, which actuates the low-pressure controls into short cycling. The compressor has just shut off, and it is cycled on again after only a short time, due to the

Copyright Goodheart-Willcox Co., Inc.

leaking TXV allowing the rapid rise in evaporator pressure. A TXV leak will also cause frosting or sweating on the suction line.

Poorly seated or failing compressor valves can allow refrigerant to flow back into the suction line. Low-side pressure will rise rapidly during the Off cycle. The rising pressure sensed by the low-pressure control will cause the compressor to start. The system will short cycle while providing little or no cooling. Compressor valve troubles in a hermetic compressor require replacement of the compressor.

Overload Controls

Most refrigeration systems are equipped with one or more overload safety devices in the electrical system. These devices stop the compressor's motor if the motor becomes too hot or draws too much current. The overload safety devices will reset after the motor cools, allowing the compressor to restart once motor controls call for cooling.

If a system is short cycling due to an overload, the supplied power should be checked for proper voltage and current. The compressor should also be checked for proper starting and running voltage and current draw. In rare cases, the overload itself may be faulty or undersized for the compressor. This is more likely if it is not the original manufacturer's overload protection.

High-Pressure Safety Controls

Systems equipped with a high-pressure safety control on the high side will sometimes cause the system to short cycle. A pressure sensor mounted in the discharge line monitors head pressure and shuts off the compressor if head pressure rises too high, **Figure 53-29**. High head pressure will cause the system to stop running before the temperature control ends its call for cooling. Once head pressure drops, the system will start again.

The cause of the high head pressure must be addressed. High head pressure could result from numerous causes. A few common causes are refrigerant overcharge, restricted condenser airflow (reduced condenser efficiency), or noncondensables trapped in the condenser.

Anti–Short Cycle Controls

To prevent a refrigeration system from short cycling, a technician may install an anti–short cycle control. An ***anti–short cycle control*** is a type of solid-state relay that will stop a compressor from cycling on before a preset time has passed after shutdown, **Figure 53-30**.

While an anti–short cycle control is useful in various applications, these controls will not always address the root cause of a system's short cycling. Anti–short cycle controls protect a compressor from short cycling; however, technicians should investigate and remedy the cause of short cycling whenever possible.

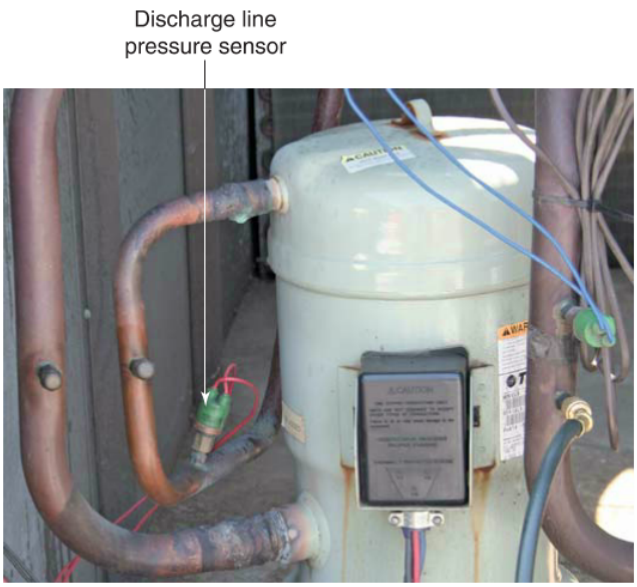

Goodheart-Willcox Publisher

Figure 53-29. A discharge line pressure sensor monitors head pressure for the high-pressure safety control.

SSAC, LLC

Figure 53-30. An anti–short cycle control will open a compressor's control circuit for a preset period of time after shutdown to prevent a compressor from cycling on again prematurely.

Copyright Goodheart-Willcox Co., Inc.

53.3.6 Noisy Unit

Noise in a refrigeration system can come from three principal sources: compressors, electric fan motors, and the mounting hardware of a condensing unit. A compressor is noisy when it pumps too much oil. It is also noisy when valves, piston pins, connecting rods, and pistons have become worn due to a lack of oil or contaminated oil. When a compressor gets very warm, it will sometimes develop knocks. These are usually hard to remedy, but they may be caused by a lack of oil.

If excessive noise is present inside a compressor, check the oil level if the compressor has an oil sump. Hermetic compressors require a refrigerant and oil recovery and the addition of new oil and refrigerant according to the manufacturer's specification. Oil that has been removed should always be tested for acidity and contamination. If the oil is contaminated, this may be an early indication of a compressor about to fail. The compressor should be replaced prior to its causing a burnout and full system contamination.

The metal shaft seal used on open-drive compressors occasionally becomes noisy, giving out a shrill squeal. This is usually caused by a lack of oil at the seal. If not remedied, it will soon score the seal and cause it to leak.

Some open-drive compressors contain an oil level sight glass for quick identification of compressor oil sump level. If the oil appears to be clear and clean, additional oil may be added to the system. If the oil appears dark brown, it may require replacement.

Conventional electric fan motors may produce different noises, such as fan roar, bearing squeak, or motor rumble. The cause of most fan motor issues is actually a result of problems with the fan blades causing stress on the motor bearings or fan blades hitting a shroud.

First, check that the fan rotates smoothly within its shroud. Check for signs of damaged or bent fan blades. Replace the fan if any damage is found. Check for any "slop" or play in the fan bearing as it is attached to the motor shaft. Replace the fan bearing or fan assembly.

Restricted airflow may also cause the fan motor to overheat. Make sure that the condenser is free of obstructions and that there is proper airflow across the condenser. If the fan blades, bearings, and airflow are good, but the motor is still noisy, check the voltage and current at the fan motor. If the fan motor is drawing too much current due to internal winding problems, it may need to be replaced.

Occasionally, if a motor is loaded too heavily (undersized for the application), the starting winding does not cut out. It will cause continuous noisy operation. If allowed to run this way, the motor will burn out.

A motor driving a belt may produce noise when the belt is dry. It may be stopped by using a dressing recommended for belts. Pulleys that are out of line may also cause noise. This may be remedied by realigning the pulleys, **Figure 53-31**. Do not use oil.

Sometimes an entire condensing unit will vibrate excessively. This produces a rumbling sound as the system runs, shaking the cabinet disagreeably. This is probably due to poor mounting or spring suspension. Most condensing units are mounted using rubber isolation absorbers. These may become brittle over time and require replacement. Check for cracks or dryness in the isolation mounts and replace them if necessary. Also check for broken or worn springs at the compressor mounting base. Some obstruction may be in the condensing unit compartment, such as debris in outdoor condensers. Check for any objects that may be rubbing against tubing or the compressor and remove them.

Excessive head pressure will make a condensing unit vibrate more than normal. The compressor pistons or scroll are not circulating oil adequately due to high head pressure causing metal-to-metal contact inside the compressor. The cause of the high head pressure should be remedied and the compressor oil checked to make sure that no internal damage has occurred.

Gates Corporation

Figure 53-31. This technician is checking pulley alignment using a laser alignment tool.

Copyright Goodheart-Willcox Co., Inc.

53.4 Troubleshooting Ice Machines

In addition to having many of the same parts as most refrigeration systems, commercial ice machines also have specially designed evaporators for forming and freezing ice. Ice machines also have water circuits and controls necessary for producing and harvesting ice. Problems with ice machines can often be found in these parts of a system, rather than in its refrigeration system.

Many standalone ice machines are refrigeration systems that are ***critically charged***. This means that the refrigerant charge is very precise and must remain at this level for effective, trouble-free operation. Therefore, an HVACR technician troubleshooting an ice machine should learn to diagnose problems without having to connect gauges. This will eliminate the small loss of refrigerant that results from connecting gauges to a refrigerant circuit. Even a small loss of refrigerant from a critically charged ice machine could lead to poor operation and future system breakdowns.

Pro Tip

Gauges on Ice Machines

While it is best to avoid connecting pressure gauges to critically charged ice machines, it will be necessary in some cases. When connecting a pressure gauge to a critically charged ice machine, ensure that there is the least amount of hose or tubing between the access port and the gauge as possible. Rather than using a standard gauge hose, use as few couplings as possible and a quick-connect fitting, **Figure 53-32**.

Technicians servicing ice machines should learn to rely on interpreting temperature and electrical measurements and identifying other signs of poor operation. These other signs could include the presence of moisture in certain amounts and locations, the size and condition of the ice produced, and various sights, sounds, and smells throughout an ice machine. Much of this information is acquired through careful inspection and experience.

Modern ice machines often have an electronic control unit that displays operational and diagnostic trouble codes. This is extremely helpful in troubleshooting. Trouble codes often identify symptoms of poor operation. The technician must investigate to determine the causes of these symptoms, **Figure 53-33**.

Trouble codes offer good starting points for fixing a particular problem. After reflecting on the implications of a trouble code, consider possible causes of the problem. Closely examine wiring diagrams before attempting a repair to a problem. Study and become familiar with the wiring diagrams of ice machines produced by different manufacturers for a broader understanding of their operation, **Figure 53-34**.

53.4.1 Water Quality

Several types of cube ice machines use a control called a ***water level/conductivity probe***. This device senses the level of the water in an ice machine's sump or water reservoir. It also monitors the conductivity of the water. As water is frozen into ice, less water returns to the water reservoir. When a certain level is sensed by the water level/conductivity probe, the control unit responds by refilling the water reservoir.

Certain ice machines rely on water level/conductivity probes. These ice machines gradually freeze

Ritchie Engineering – YELLOW JACKET Products Division

Figure 53-32. When attaching a pressure gauge to an access port on a critically charged ice machine, use a few couplings and a quick-connect fitting, rather than a standard hose.

Copyright Goodheart-Willcox Co., Inc.

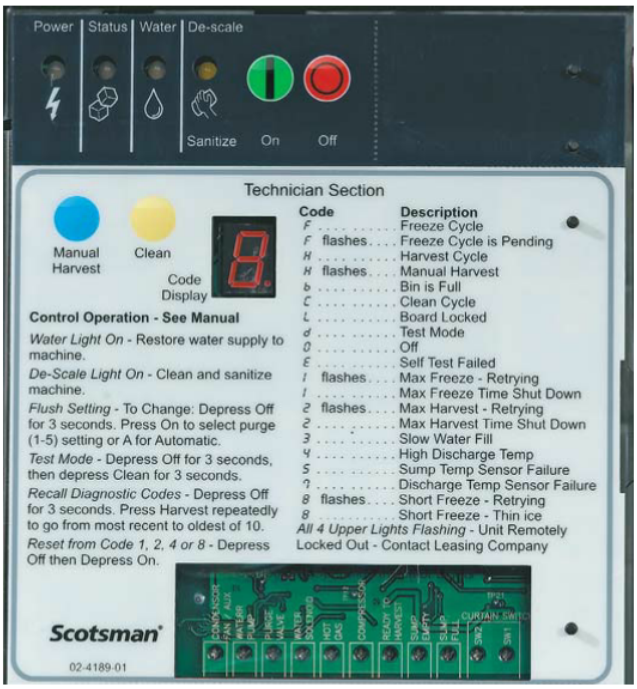

Scotsman Ice Systems

Figure 53-33. In some ice machines, LED codes not only display trouble codes but also indicate in which phase of operation the machine is.

flowing or moving water into ice. Examples include cube ice machines with a vertical evaporator or an inverted evaporator. As water freezes, minerals in the water solution often continue to flow with the unfrozen water. While some of the water is freezing and turning into ice, the minerals continue moving. This can lead to an accumulation of minerals in the sump or water reservoir.

When an ice machine's water level/conductivity probe senses a certain level of conductivity in the water reservoir, it indicates a high concentration of minerals in the water. The most pleasing ice to consumers has the least amount of minerals. The control unit responds to the water level/conductivity probe by draining the water reservoir. It may also activate an LED code, prompting a service technician to replace water filters or perform cleaning of the water-related parts of the ice machine. Review manufacturer literature to locate and service an ice machine's water level/conductivity probe, **Figure 53-35**.

53.4.2 Drain Problems

Ice machines often have more than one drain connection. A drain at the bottom of an ice storage bin

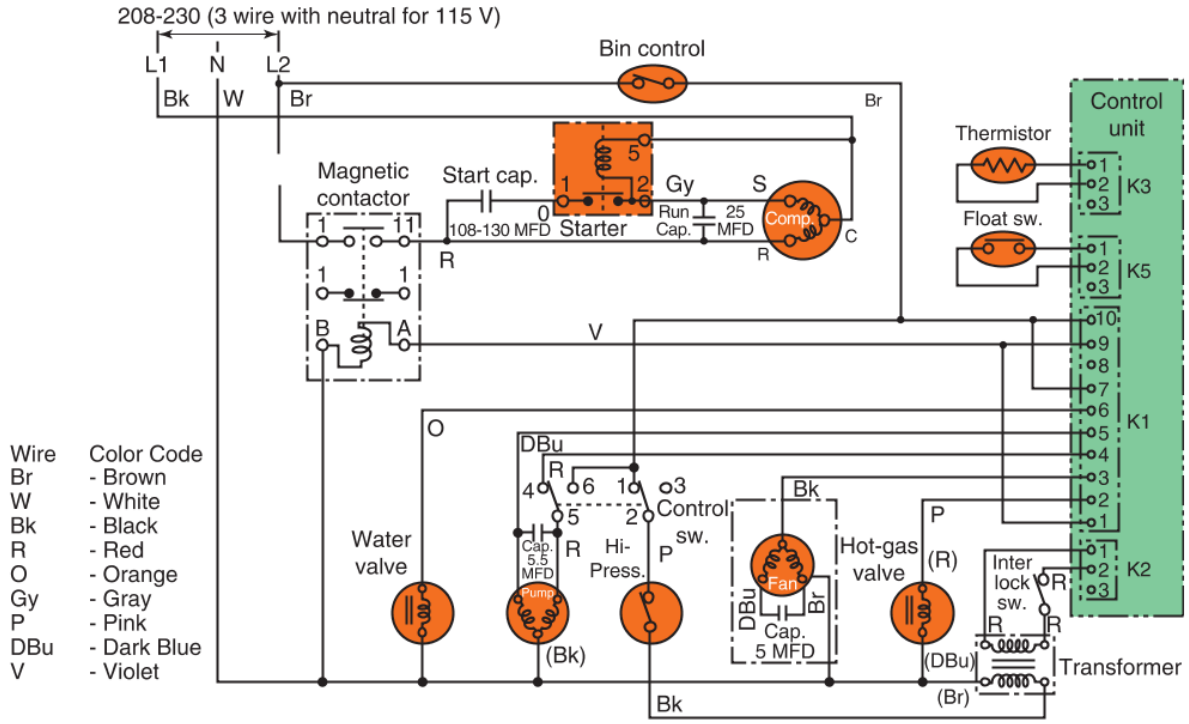

Hoshizaki America, Inc.

Figure 53-34. The control unit in this electrical wiring diagram controls all the electrical components in this ice machine.

Copyright Goodheart-Willcox Co., Inc.

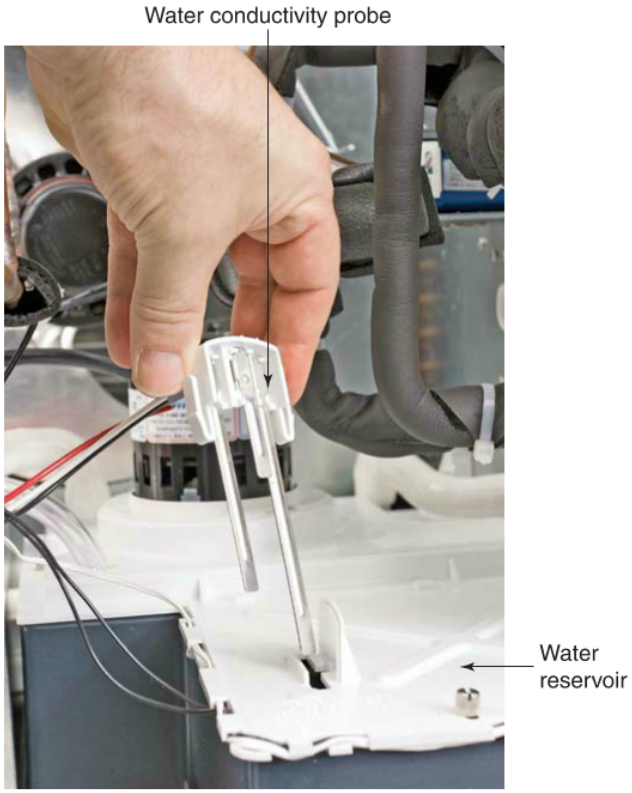

Scotsman Ice Systems

Figure 53-35. The level and quality of an ice machine's water used to make ice is monitored using a water level/conductivity probe placed in the water reservoir and wired into the control unit.

allows any melting ice to drain out. A stopped up bin drain could accumulate water that could melt and ruin batches of ice until it is unclogged. If a water reservoir drain is clogged, the water will develop a strong mineral concentration, which will produce low-quality ice and could leave mineral deposits in spray nozzles, ice mould surfaces, and other locations along the water circuit.

A continuous flow of water down a drain could be traced to any number of problems. An excessive amount of ice in the storage bin could be melting. A float switch regulating water level could be out of calibration and dumping water into the ice storage bin. A solenoid valve for draining the water reservoir could be stuck open. A water-cooled condenser's water valve could be out of calibration or stuck open.

Some manufacturers require a separate, dedicated drainpipe from each part of an ice machine to the building's plumbing drain. This means that a water reservoir drain will not connect to the same drain tubing as an ice storage bin's drain tubing. There will be no tee connections among drain tubing within the ice machine. This is especially important when some of the drains are pressurized. If pressurized drains are connected, one drain could back up through another drain and spill into another part of a system. If the installer followed guidelines properly, it should be easier to determine which part of a system is draining excessively. Determining the source of excessive draining is an important first step in servicing drain problems.

Regular cleaning of the evaporator, ice moulds, reservoirs, and other water-circulating parts of an ice machine is important for proper operation. This prevents the buildup of scale and minerals that lower the quality of the ice and reduce system efficiency.

53.4.3 Head Pressure in Ice Machines

As in all refrigeration systems, high head pressure may develop and cause cascading problems. In an ice machine with an air-cooled condenser, the first and easiest checks to perform are inspecting the condition of the condenser and its air filter. An ice machine's condenser and its air filter should be cleaned regularly, according to manufacturer recommendations. This will keep the flow of cooling air across the condenser constant, which will help to keep head pressure from rising above normal, **Figure 53-36**.

For checking head pressure in an ice machine with a water-cooled condenser, measure the temperature of the water leaving the condenser. For many models, this value should be between 95°F (35°C) and 105°F (40.6°C) when the machine is running and at its proper head pressure. The temperature of the water will correlate with head pressure, as specified in manufacturer literature.

When a water temperature measurement is lower than normal, use your gauge manifold to measure head pressure. A low water temperature and a head pressure measurement that are within a manufacturer's recommended range indicate a reduced heat transfer between high-side refrigerant and condenser water. The likely cause is the formation of a light coating of mineral deposits in the condenser water circuit. This formation would reduce water temperature and raise head pressure.

The water valve in an ice machine with a water-cooled condenser may be able to respond sufficiently to high head pressure and a reduced heat transfer with increased water flow. Refer to **Figure 53-37**.

In this ice machine, the water valve's sensing element is connected to the discharge line. There it senses and responds to head pressure. As head pressure

Copyright Goodheart-Willcox Co., Inc.

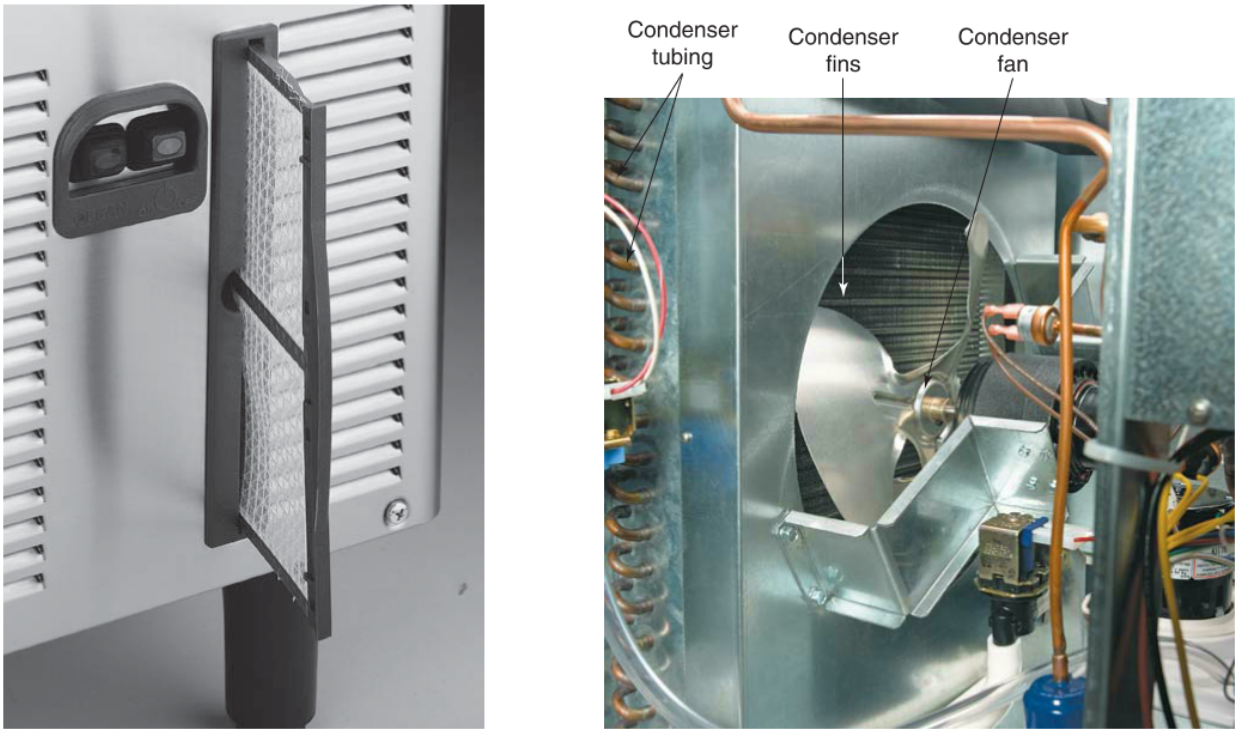

A B

Scotsman Ice Systems

Figure 53-36. A—Since an ice machine's condenser air filter is so frequently inspected, manufacturers often design their machines with convenient access in mind. B—Check the cleanliness of condenser tubing and fins, as well as fan cleanliness and operation.

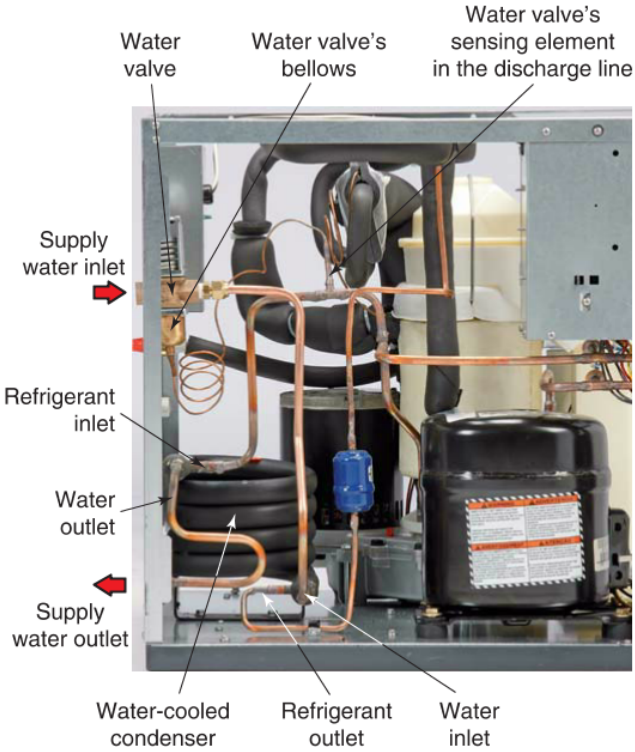

Scotsman Ice Systems

Figure 53-37. Notice how a water valve is installed in this flake ice machine. Its sensing element in the discharge line monitors head pressure, which determines the amount of water to enter the condenser.

Copyright Goodheart-Willcox Co., Inc.

increases, the water valve opens more to increase water flow to absorb and remove more heat from the condenser.

If an ice machine's operating head pressure is below normal but still within the manufacturer's recommended range, system shutdown and service can be briefly postponed. Though this condition may force the ice machine to consume more water than normal, it could allow the owner to plan for scheduled service at a convenient time, rather than shut down the ice machine at an inopportune time.

When a condenser's water circuit is suspected of having a thin layer of mineral deposits, it should be flushed with scale remover. After flushing, normal head pressure and condenser water temperature should return.

If head pressure is above the manufacturer's recommended range of operation, a thick layer of scale probably developed in the water circuit. As head pressure rises, a condenser's water valve will try to compensate for the reduced heat transfer by opening wider and allowing more water to flow through the condenser. However, at some point, the thickness of the mineral deposit and its insulating ability will exceed the water valve's ability to compensate. Head pressure will rise until a high-pressure safety device shuts off the ice machine. The system may need to be restarted manually by resetting the safety device. However, the system may need time for head pressure to reduce before the safety device will allow the system to restart.

Heavy mineral deposits in the water circuit of a water-cooled condenser may require an acid cleaning. However, cleaning does not always alleviate problems related to reduced heat exchange and high head pressure. If the scale buildup is severe, the condenser may need to be replaced.

53.4.4 Capacity Check

Ice machines are engineered to produce a certain amount of ice each day. This is important information for owners, as they need to ensure that there is an adequate amount of ice for their customers. When an owner asks for service due to not having enough ice, a service technician should perform a capacity check.

A ***capacity check*** for an ice machine involves running through an ice production cycle, measuring temperatures, timing the length of the cycle, weighing the ice batch produced, and calculating the total daily production potential. These values should be compared with manufacturer specifications.

- Ambient (condenser) air temperature: _____ °F/ _____ °C.
- Supply water temperature: _____ °F/_____ °C.
- Total cycle time: _____ minutes.
- Total ice batch weight: _____ lb.
- Calculated potential daily ice production weight: _____ lb.

Ice Machine Capacity Check

1. Turn off and lock out the ice machine.
2. Perform a brief visual inspection to see if there are any noticeable problems that should be investigated and remedied before starting the ice production cycle. Check for dirty air filters, excess moisture or condensation, or other symptoms that may need to be addressed immediately.
3. Locate the ice machine's condenser. If it is an air-cooled condenser, measure and record ambient air temperature: _____ °F/°C. If it is a water-cooled condenser, use the water temperature measurement later in this procedure for this value.
4. Measure the temperature of the supply water at the ice machine's water inlet: _____ °F/°C. If the ice machine has been sitting idle for a while, monitor water temperature throughout the ice production cycle to see if this value changes from your initial measurement. If it differs, update your previously recorded value.
5. Completely empty the machine's storage bin of all its ice and moisture. Check the bin drain. If it is blocked, unclog it and make notes on this in your service record.
6. Set and prepare a stopwatch or other time-recording device for timing the ice production cycle.
7. Undo the lockout and turn on system power. Start the stopwatch and ice machine at the same time to synchronize operation.
8. Monitor the ice machine during the ice production cycle. Refer to the ice machine's control unit or display that indicates its current stage of operation.
9. Occasionally check water temperature to see if it still corresponds to your previously recorded value. Update your records if the measurement changes.

Copyright Goodheart-Willcox Co., Inc.

10. When the ice machine ends its ice harvest and cycles off, record the total length of the cycle time: _____ minutes.
11. Weigh the batch of ice produced during this cycle: _____ lb.
12. Divide the length of time recorded by the total number of minutes in a day (1,440) to get the total possible number of daily ice production cycles:

    1,440 minutes ÷ _____ minutes = _____ potential daily cycles.

13. Multiply the number of potential daily cycles by the recorded weight of the ice batch:

    _____ potential daily cycles × _____ lb = _____ lb of daily ice production potential.

14. Compare the weight of the daily ice production potential with the manufacturer's recommended daily ice production. If the calculated value is within 10% of the manufacturer's recommendations, the ice machine is operating properly.

If an ice machine is producing less than 10% of the manufacturer's recommendations, review manufacturer literature for operational characteristics that may be measured. Inspect the machine for plugged drains and other water circuit problems. Reference any diagnostic codes on the control unit.

If an ice machine is producing over 10% of the manufacturer's recommendations, inform the owner that the ice machine is producing over capacity, which is a good problem. If the owner routinely runs out of ice, explain the following common options: a larger storage bin, a nearby storage freezer, and an additional ice machine.

If the current ice machine is sized to fit a larger replacement storage bin, recommend replacing the current bin with a larger bin. If bin replacement isn't possible, discuss the other options.

In many businesses, weekend demand for ice is high, and weekday demand for ice is low. Installing a freezer nearby would allow the owner to move and store ice produced during the week into the freezer and to use the ice throughout the busy weekend. If this isn't possible or convenient, an additional ice machine may be the solution.

Ambient air affects the amount and rate of heat that can be expelled from the refrigerant circuit of an ice machine with an air-cooled condenser. The lower the ambient air, the more heat and the more quickly it is expelled from the refrigerant circuit. This can reduce the length of time of the ice production cycle, which can increase the total daily batch production.

The ambient temperature of an ice machine with a built-in air-cooled condenser that is located in an air-conditioned part of a building should not experience drastic capacity changes throughout a year. However, an ice machine with a remote air-cooled condenser that is outside or in an unconditioned part of a building will be more affected by ambient air temperature.

The temperature of ambient air does not affect ice machines that use a water-cooled condenser. Instead, water temperature affects system operation. Generally, water temperature should remain fairly constant. However, this depends on the installation and whether it can be influenced by the weather.

The supply water temperature affects the production capacity of all ice machines, whether it has an air-cooled condenser or a water-cooled condenser. The lower the temperature of the water, the more quickly it can be frozen and harvested as ice. The faster the cycle time, the more cycles that can happen in a day, and the more ice produced daily.

53.4.5 Cube Ice Machine Service

Troubleshooting cube ice machines varies depending on the evaporator type and ice mould. Vertical evaporator cube ice machines often use an ***ice thickness sensor***. This device monitors the thickness of the ice forming in the moulds. If an ice thickness sensor is calibrated poorly, ice may form too thickly. The ice thickness sensor in this ice machine is located near the water distribution manifold, **Figure 53-38**.

During the ice production cycle, the edges of individual ice cubes join together to form a single sheet of ice. This is an intentional design, which allows the entire sheet of ice to fall at once against a deflector tray and break apart into individual cubes before sliding into the storage bin. However, when an ice thickness sensor is calibrated poorly, the edges formed on the ice cubes will grow to be too thick. When the sheet of ice drops to the deflector tray, groups of ice cubes stick together in large clumps. These clumps of joined ice cubes are too big for consumer use. Reduce the thickness by adjusting the ice thickness sensor.

Ice machines with inverted evaporators may have different problems than vertical evaporator ice machines. If the mineral concentration in the water

Copyright Goodheart-Willcox Co., Inc.

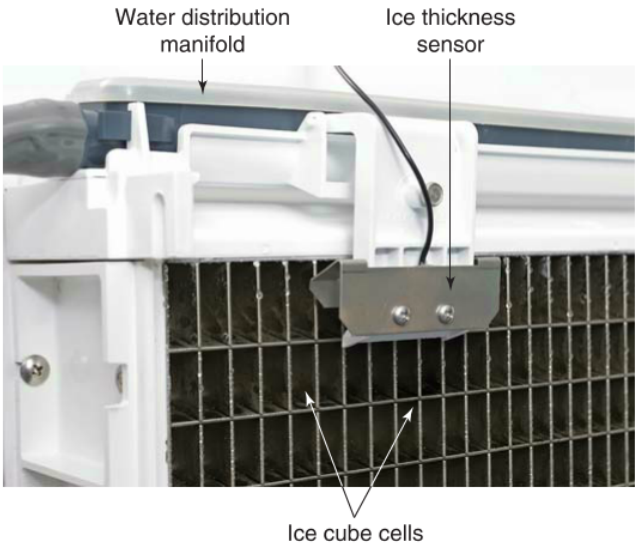

Scotsman Ice Systems

Figure 53-38. Cube ice machines with a vertical evaporator use an ice thickness sensor to determine when ice is ready to harvest.

reservoir becomes too high, scale and deposits may form on the spray nozzles, **Figure 53-39**.

A service technician must keep spray nozzles clean to ensure uniform cube shape and formation. If cubes are oddly shaped, inspect the spray nozzles for mineral deposits. Inspect the water reservoir and its probe for mineral deposits. Check the water reservoir drain. Consider replacing any water filters.

Scotsman Ice Systems

Figure 53-39. This spray assembly has several nozzles that shoot upward into an inverted mould that is backed by evaporator tubing.

53.4.6 Flake Ice Machine Service

Flake ice machines have more mechanical parts than cube ice machines. Therefore, certain problems in flake ice machines can be easily heard: clicking gears, screeching blades, and crunching mineral deposits. Proper maintenance and service will help to prevent such situations.

In flake ice machines, loud and unfavorable sounds during operation often point to mechanical problems. A crunching sound may be caused by the auger cutting mineral deposits that have formed in the evaporator. This may prompt a service technician to remove the auger for a thorough inspection, **Figure 53-40**.

While disassembling the evaporator, examine the bearings and other parts, **Figure 53-41**. Evaporator disassembly is a good opportunity to ensure that everything is lubricated properly. Follow manufacturer recommendations.

When a flake ice machine's evaporator is disassembled, do not just examine moving parts. Also check the nonmoving parts. Examine the inner wall of the evaporator for scoring, **Figure 53-42**.

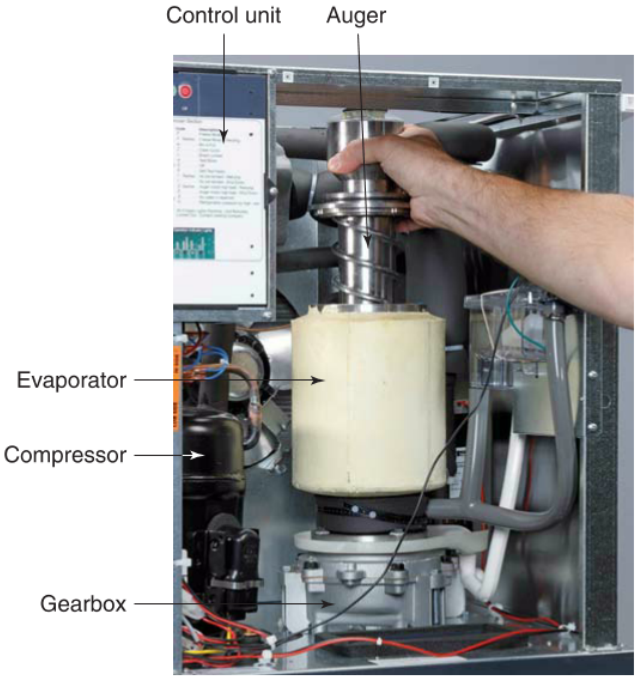

Scotsman Ice Systems

Figure 53-40. The service technician is removing the evaporator's auger for an inspection.

Copyright Goodheart-Willcox Co., Inc.

Scotsman Ice Systems

Figure 53-41. Some of a flake ice machine's moving parts.

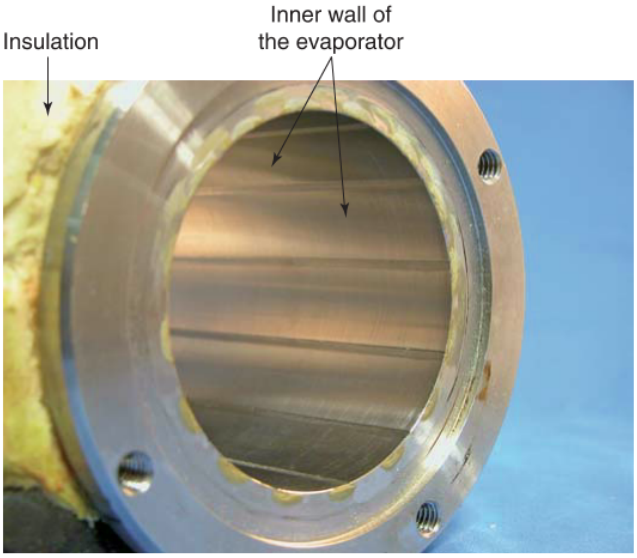

Scotsman Ice Systems

Figure 53-42. The inside of a flake ice machine's evaporator.

Flake ice machines rely on an auger to cut ice flakes from solid ice. With time and use, an auger may become worn and damaged. Compare the photos of a damaged auger and a new auger in **Figure 53-43**.

Flake ice machines rely on a float switch within the water reservoir to maintain enough water in the evaporator. A poorly calibrated or faulty float switch can cause several problems that can be identified by knowledgeable technicians.

Flake ice machines are designed to have ice form only up to a certain level in the evaporator. When a float switch is calibrated to a level too high, there will be more ice than usual for the auger to cut. This will require the auger to work harder and draw more current through its motor, which may trip its overload protection. Often, the overload protection device must be reset manually.

Another problem from a float switch being set too high is water from the evaporator spilling into the ice

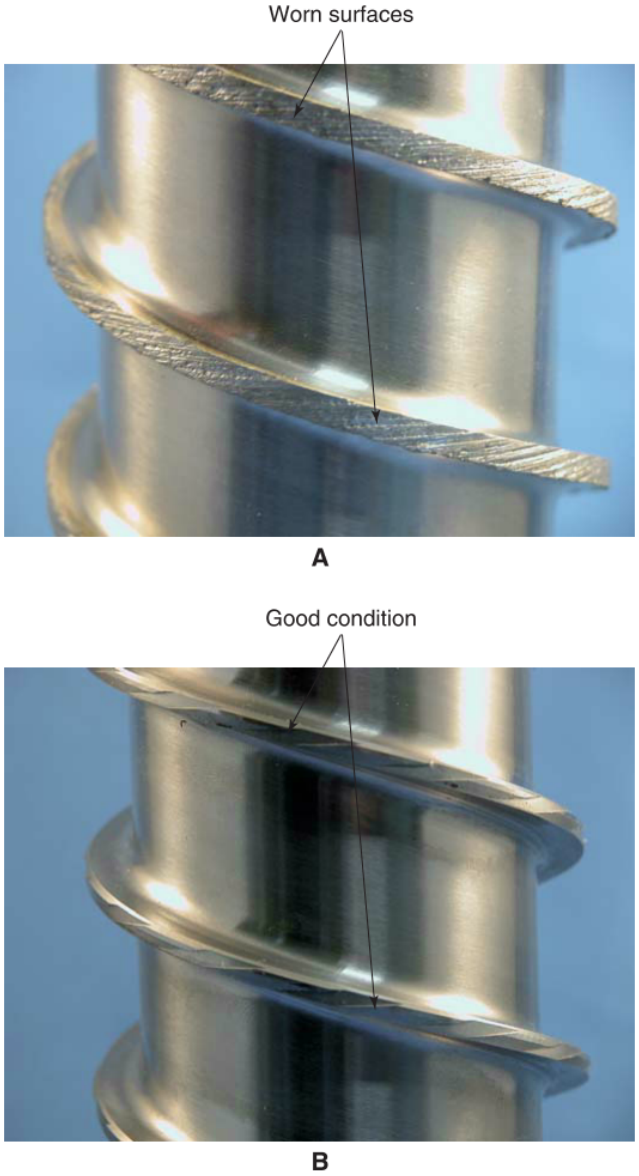

Scotsman Ice Systems

Figure 53-43. A—Damaged flake ice machine auger. B—Flake ice machine auger in good condition.

Copyright Goodheart-Willcox Co., Inc.

bin. This will melt and ruin flake ice in the bin, reducing the capacity of the machine. Refer to manufacturer literature for calibrating a flake ice machine's float switch, **Figure 53-44**.

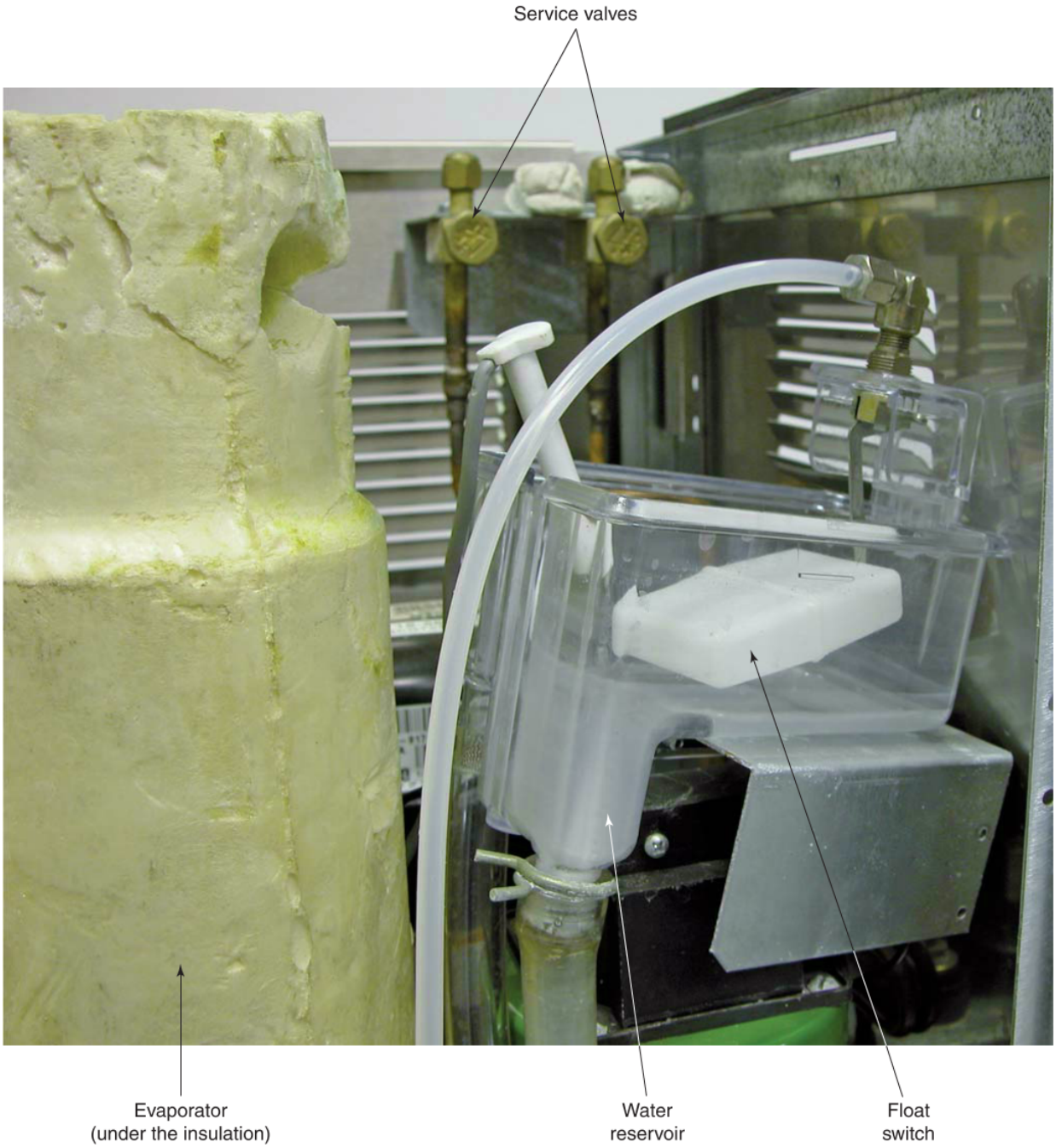

Scotsman Ice Systems

Figure 53-44. A float switch is one of the more easily accessible parts in a flake ice machine.

Copyright Goodheart-Willcox Co., Inc.

Summary

- Troubleshooting begins with an owner's description of system operation. Take and record temperature, pressure, and electrical measurements. Understand what is happening within the system before performing repair work.
- A refrigeration system with insufficient refrigerant will have reduced capacity due to less latent heat available for evaporation and condensation. Excessive suction line pressure drop may be caused by a clogged low-side, inline component or a pinched tube. The compressor pumps less weight of vapor per stroke, reducing system capacity. System operation is prolonged, and the cost of operation increases.
- Noncondensables in the refrigerant circuit reduce heat rejection capacity, raise head pressure, and cause the compressor to draw more current (consume more electrical power). These same symptoms can happen from other causes of high head pressure, such as a dirty condenser or restricted condenser airways.
- Moisture in the refrigerant circuit may cause rusting, corrosion, oil sludging, acid formation, and restrictions when frozen in valves. Check moisture indicators frequently to monitor for moisture content within the refrigerant circuit.
- A sight glass is a quick way to check whether a refrigeration system has an adequate charge. A properly charged system will have acceptable suction and head pressure levels and no bubbles in the sight glass. When possible, check superheat, subcooling, and other performance measurements to confirm proper charge.
- An undercharged refrigeration system will have low suction and head pressures. Subcooling will be low, and superheat will be high. A sight glass will show bubbles.
- A system with a restriction in its refrigerant metering device will have insufficient cooling or run a very long time to cool enough to cycle off. The evaporator will have high superheat, and no bubbles will appear in the sight glass. Suction pressure will be lower than normal, and head pressure will be low to normal.
- A system with an inefficient compressor will produce poor cooling. Suction pressure will be high, and head pressure will be low. Superheat will be high, though subcooling should be normal.
- An overcharged system will have poor cooling, high suction pressure, and high head pressure. Subcooling will be high, but superheat will be low to normal, depending on the type of refrigerant metering device and the amount overcharged.
- A restriction on the high side of a system causes poor cooling. Suction and head pressures will be low. Bubbles will be in the sight glass, and there will be a measurable temperature drop between the inlet and outlet of the liquid line and across the restriction.
- A restriction on the low side of a system causes high evaporator pressure but low suction pressure. Superheat, subcooling, and head pressure will be low. A measurable temperature difference at two points along the suction line will identify the location of the restriction.
- Noncondensables trapped in a condenser raise head pressure, suction pressure, subcooling, and compressor current draw. If head pressure does not drop but remains constant for several minutes after cycling off, noncondensables are in the system.
- Reduced condenser efficiency is often the result of dirt accumulation, blocked airflow passageways, and fan problems. Suction and head pressure rise above normal. Subcooling may be normal. Superheat will be low to normal depending on the type of refrigerant metering device.
- Reduced evaporator efficiency is often the result of dirt accumulation, blocked airflow passageways, and fan problems. Suction and head pressures will be low. Subcooling should be normal. Superheat will be low to normal depending on the type of refrigerant metering device.
- When a refrigeration system does not run, check the electrical circuits (power and control), especially safety controls. Short cycling may be caused by the following controls: temperature, low-pressure, overload, high-pressure, and oil pressure. Anti–short cycle controls can prevent short cycling but do not address the root cause of a system's short cycling.
- Trouble noises in a refrigeration system can come from compressors, fans, and mounting hardware. Listen, visually examine, and take various measurements when diagnosing and fixing noise problems.

Copyright Goodheart-Willcox Co., Inc.

- Problems with ice machines are often found in the water circuit and ice sections of the machine, rather than in the refrigeration system. Critically charged ice machines should be diagnosed with electrical and temperature measurements, symptom recognition, and diagnostic codes.
- A capacity check requires taking various measurements and running through an ice production cycle. This provides a good indication as to the state of the operation of an ice machine and can be used for future diagnosis of problems. Ice machine service largely depends on the type of evaporator a system uses.

Review Questions

Answer the following questions using the information in this chapter.

1. When a refrigeration system's suction line is noticeably cold instead of just being cool, it probably contains _____ refrigerant.
   A. high-pressure liquid
   B. high-pressure vapor
   C. low-pressure liquid
   D. low-pressure vapor
2. When a refrigeration system's liquid line is noticeably hot instead of just being warm, it probably contains _____ refrigerant.
   A. high-pressure liquid
   B. high-pressure vapor
   C. low-pressure liquid
   D. low-pressure vapor
3. It can be reasonably assumed that a refrigeration system has an adequate refrigerant charge when all the following criteria are met, *except* for _____.
   A. bubbles in the sight glass
   B. no bubbles in the sight glass
   C. proper head pressure
   D. proper suction pressure
4. When a refrigeration system that produces low or no cooling has low suction pressure and low head pressure, it probably _____.
   A. has an inefficient compressor
   B. has noncondensables trapped in its condenser
   C. is overcharged
   D. is undercharged
5. When a refrigeration system that produces low or no cooling has high suction pressure and low head pressure, it probably _____.
   A. has an inefficient compressor
   B. has noncondensables trapped in its condenser
   C. is overcharged
   D. is undercharged
6. When a refrigeration system that produces low or no cooling has high suction pressure and high head pressure, it probably _____.
   A. has an inefficient compressor
   B. has a low-side restriction
   C. is overcharged
   D. is undercharged
7. When a refrigeration system that produces low or no cooling has low suction pressure, high head pressure, and high evaporator pressure, it probably _____.
   A. has a high-side restriction
   B. has a low-side restriction
   C. is overcharged
   D. is undercharged
8. When a refrigeration system does not provide its evaporator with enough liquid refrigerant, the evaporator exhibits _____.
   A. reduced latent heat capacity
   B. reduced sensible heat capacity
   C. reduced subcooling
   D. None of the above.
9. When a refrigeration system produces normal to excessive refrigeration and operates continuously without stopping, the probable cause is a(n) _____.
   A. faulty motor control
   B. inefficient compressor
   C. overcharge
   D. undercharge
10. When a refrigeration system producing low to normal refrigeration operates continuously without stopping and has high suction pressure and high head pressure, the probable cause is _____.
    A. an inefficient compressor
    B. a low-side restriction
    C. noncondensables trapped in the condenser
    D. an undercharge of refrigerant

Copyright Goodheart-Willcox Co., Inc.

11. When noncondensables are trapped in a refrigeration system's condenser, its head pressure measurement after cycling off should _____.
    A. drop steadily in a gradual manner
    B. gradually rise higher for several minutes
    C. immediately drop into vacuum
    D. remain constant for several minutes
12. Blocked airflow passageways, burned out fan motors, and dirty fins and tubes are common causes of the reduced efficiency of _____.
    A. accumulators and liquid receivers
    B. augers and solenoid valves
    C. condensers and evaporators
    D. drains and water-cooled condensers
13. When a commercial refrigeration system produces no refrigeration and its compressor does not operate at all, the cause is probably _____.
    A. electrical
    B. mechanical
    C. refrigerant-related
    D. water-based
14. In most cases, excessive noise in a refrigeration system may be caused by the following sources, *except* _____.
    A. a compressor
    B. an electric motor
    C. a liquid line
    D. mounting hardware of a condensing unit
15. It is best to troubleshoot critically charged ice machines using diagnostic codes, visual clues, and the following measurements, *except* _____.
    A. electrical current
    B. pressure
    C. temperature
    D. voltage
16. An ice machine's water level/conductivity probe may be used to determine when to do the following actions, *except* when to _____.
    A. clean the condenser
    B. drain the water reservoir
    C. refill the water reservoir
    D. replace water filters
17. Three common options to suggest to an owner complaining of not enough ice being produced from an ice machine include the following, *except* installing a _____.
    A. larger replacement storage bin for the current ice machine
    B. nearby freezer for overflow ice storage
    C. second ice machine
    D. a tee or other fitting to join all the drain lines together
18. A capacity check for an ice machine involves running through an ice production cycle, measuring temperatures (condenser ambient air and water), and several other steps including all the following, *except* _____.
    A. calculating various measurements for the total daily production potential
    B. tasting the ice
    C. timing the length of the ice production cycle
    D. weighing the ice batch
19. When a cube ice machine with a vertical evaporator harvests ice and the sheet of ice does not break apart into individual cubes, a technician should adjust the _____.
    A. auger
    B. float switch
    C. ice thickness sensor
    D. water level/conductivity probe
20. When water overfills the evaporator of a flake ice machine and spills over into the ice storage bin, a technician should adjust the _____.
    A. auger
    B. float switch
    C. ice thickness sensor
    D. spray nozzle

Copyright Goodheart-Willcox Co., Inc.

CHAPTER 54 Troubleshooting Commercial Systems—Component Diagnosis

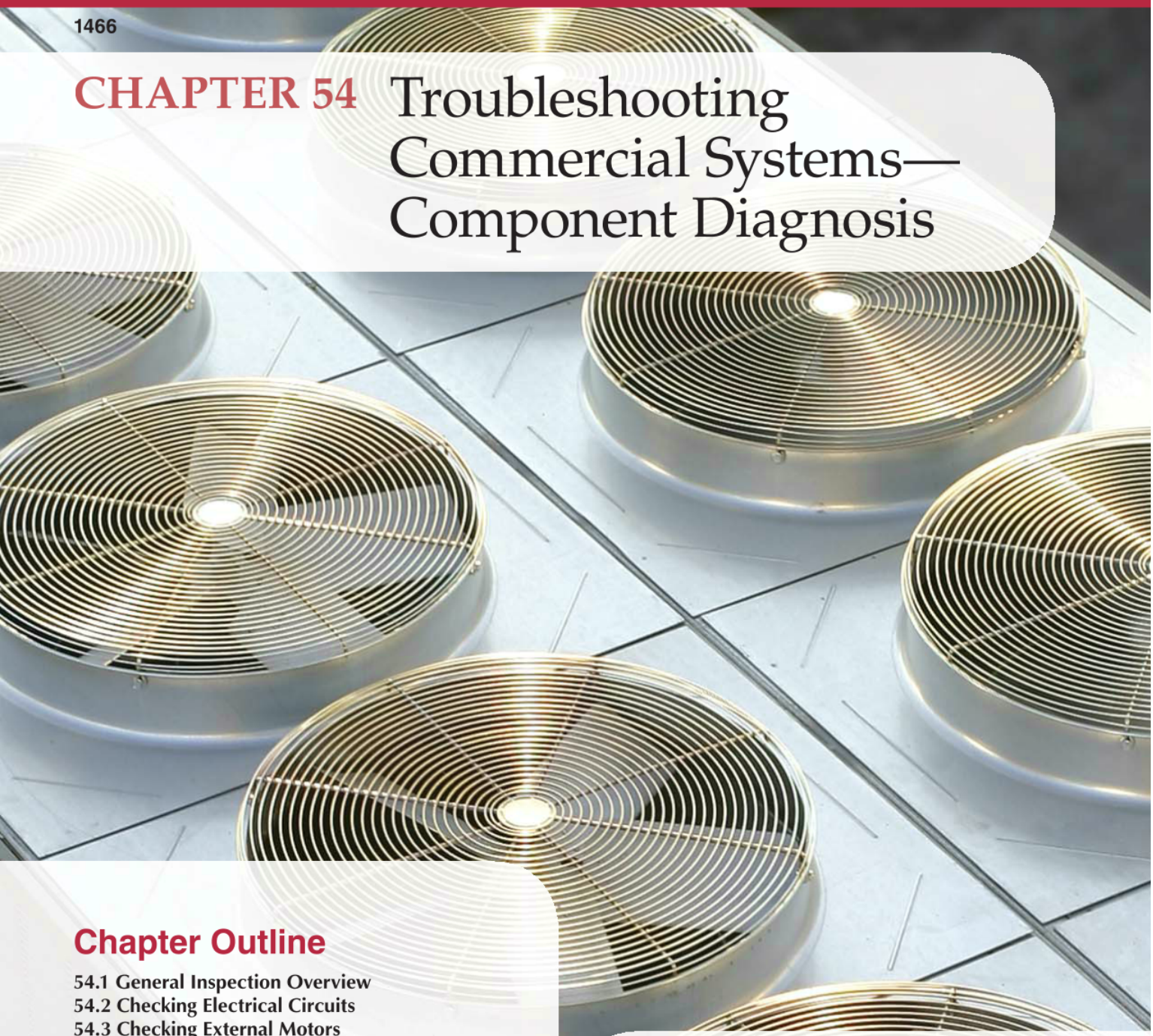

Chapter Outline

54.1 General Inspection Overview
54.2 Checking Electrical Circuits
54.3 Checking External Motors
54.4 Checking Condensing Units
- 54.4.1 Checking Open-Drive Compressors
- 54.4.2 Checking Hermetic Compressors
- 54.4.3 Checking Air-Cooled Condensers
- 54.4.4 Checking Water-Cooled Condensers

54.5 Checking Liquid Lines
54.6 Checking Thermostatic Expansion Valves (TXVs)
54.7 Checking Electronic Expansion Valves (EEVs)
54.8 Checking Evaporator Pressure Regulators (EPRs)
54.9 Checking Hot-Gas Valves
54.10 Checking Solenoid Valves
54.11 Checking Evaporators
54.12 Checking Suction Lines

Learning Objectives

Information in this chapter will enable you to:

- Test the components of a system to determine what causes it to short cycle.
- Identify and distinguish the various causes of abnormal noises created by commercial refrigeration systems before implementing a remedy.
- Identify restrictions and pressure drops in various in-line components using a temperature survey.

Technical Terms

condenser capacity
suction line pressure drop
temperature survey
water hammer
wear gauge

Review of Key Concepts

Reviewing these concepts from earlier chapters will help you understand new concepts presented in this chapter:

- Reading electrical diagrams is essential in understanding an HVACR system's operation. Two common types of electrical diagrams are pictorial and ladder. (Chapter 16)
- Proper use of electrical test equipment and meters is necessary in troubleshooting HVACR systems. (Chapter 17)
- Motor controls for a system's compressor may react to pressure, temperature, oil level or pressure, and other measurable variables. (Chapter 16)
- Understanding the operation of the different refrigerant metering devices is necessary in troubleshooting an HVACR system. (Chapter 20)
- Understanding the operation of various refrigerant flow controls and pressure valves is necessary in troubleshooting an HVACR system. (Chapter 22)
- Different refrigeration systems require different refrigerant recovery and charging methods. When possible, use a liquid method and then finish with a vapor method. (Chapter 11)
- Problems with specific components produce certain symptoms. A complete understanding of system operation provides a technician with the discernment necessary for component troubleshooting. (Chapter 25)

Introduction

The financial investment in a commercial refrigeration installation is significant. Since so many mechanisms are dependent on the proper function of another mechanism, one system problem often causes other problems. The system operation and diagnosis information covered in the previous chapter was in preparation for troubleshooting a system down to specific component level. This chapter will cover how to check specific components in a system to tell whether they are responsible for a system's poor operation.

Video

- Checking Evaporators

54.1 General Inspection Overview

It is important that all commercial refrigeration systems be completely inspected periodically. Use a systematic method of doing this. In this way, no detail will be overlooked. All inspections should cover such things as:

- Electrical connections.
- Motor and safety devices.
- Compressor noises.
- Refrigerant charge.
- Moisture content of the refrigerant.
- Oil level.
- Water flow.
- Coil conditions.
- Tubing supports.
- Coil supports.
- Cleanliness.

For a condensing unit with an open-drive compressor, check:

- Belt condition.
- Belt alignment.
- Belt tightness.
- Coupling connection and condition.

For a condensing unit with a hermetic compressor, check:

- Overload cutout.
- Relays.
- Capacitors.

Pro Tip

Inspection Check Lists

Preparing an inspection check list will prevent technicians from forgetting items. Providing a copy for the owner will show the thoroughness of your inspection.

54.2 Checking Electrical Circuits

More and more electrical devices are being used in refrigeration systems. Some of these are electrical defrost systems, crankcase heaters, internal motor winding protectors, solenoid valves, electrical interlocks used between multiple units, and various other accessories, **Figure 54-1**.

A technician must be knowledgeable about electrical devices and electrical circuits. Be sure to review Chapters 12 through 17, which explain the fundamentals of electricity, electric motors, and electric controls. It is important to have a wiring diagram of the system

Transducers Direct, LLC

Figure 54-1. HVACR technician examining a wireless transducer in a cold storage room.

Copyright Goodheart-Willcox Co., Inc.

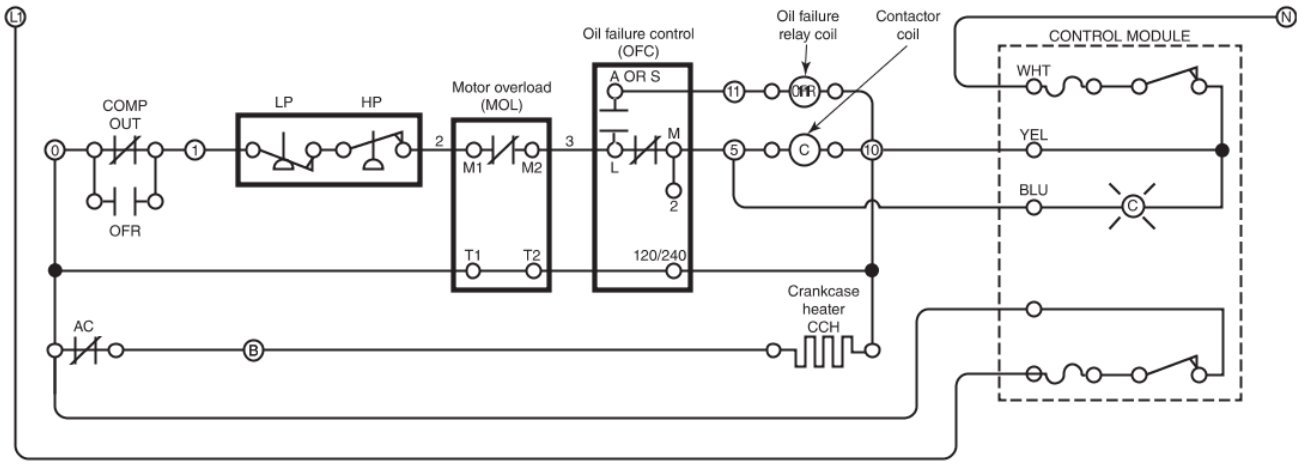

Zero Zone, Inc.

Figure 54-2. Wiring diagram for a compressor control circuit in the primary loop of a secondary loop refrigeration system.

being serviced, **Figure 54-2**. Certain items should always be checked, as modifications may have been made to a system over its service life:

- Are the wires large enough to carry the current of the device?
- Is the voltage correct?
- Is the current draw correct?

With the power on, the current draw and the voltage can be checked. If the unit will not run, turn off and lock out the power before checking the circuits for continuity and high resistance. With power off, using an ohmmeter may be more helpful and reveal more information than using a continuity tester. An ohmmeter can be used to find parts of a circuit with unintentionally high resistance, such as corroded or poorly made connections. Review the procedures in Chapter 16, *Electrical Control Systems* and Chapter 17, *Servicing Electric Motors and Controls*.

Locate a break in circuit continuity by measuring resistance in sections of a circuit with the ohmmeter or using the continuity check function on a multimeter. If a motor hums but will not start, check the starting capacitor. Use a capacitor tester or the capacitance measurement function on a multimeter, **Figure 54-3**.

Caution

Overload Protection

When servicing a compressor, do not start the unit without having fully functioning overload protection devices in the circuit. The motor control should be inspected to determine whether it trips freely. All contact points must be clean. Dirty or pitted contact points should be replaced.

54.3 Checking External Motors

Some municipalities require a licensed electrical contractor to remove, repair, and install motors. However, licensed HVACR technicians are generally able to work on electrical items within a unit. They

Sealed Unit Parts Co., Inc.

Figure 54-3. Digital multimeters designed for use in HVACR work often have a capacitance measurement function.

Copyright Goodheart-Willcox Co., Inc.

must be able to diagnose motor troubles. Motor problems can be classified as either mechanical troubles or electrical troubles.

Mechanical troubles include misalignment, excessive end play, and faults in the bearings and pulleys. The sound of a motor can indicate trouble. Under normal conditions a motor will make a steady low hum. A problem exists if there are erratic beats in the humming or rotors chatter. In any case, the trouble could be one of the following:

- Worn bearings.
- Cracked or worn out rubber isolators.
- Dry bearings.
- Lack of voltage.

With the motor running, rotor position should be between the two extremes of the rotor end play. The motor shaft will not spin in an even manner, causing wobble and noise in the fan or belt attached to the shaft. When the rotor is out of alignment, it runs inefficiently. The endplay should never exceed 1/16″ (1.587 mm). This may be adjusted by using endplay washers, which may be obtained at electrical supply houses.

The motor commutator should move freely. Brush releasing mechanisms or commutators of small motors can be checked by mounting a V-belt on the motor pulley. A load is put on the motor by pulling on the belt. Also, check the wear in the pulley by measuring a sheave's V-groove with a ***wear gauge***, **Figure 54-4**.

There are various causes of a noisy motor, including a loose pulley, a loose fan on the pulley, or a loose flywheel. These items should be checked when a noise complaint is received. Pulley bearing temperatures should be checked after operation if the unit is noisy. Use a thermometer to determine if the bearings are getting excessively hot. This would indicate that the bearings need to be lubricated or replaced.

Gates Corporation

Figure 54-4. A wear gauge will help in determining a sheave's condition.

Small fans are often driven by shaded-pole motors, and their most common trouble is worn bearings. Many of these motors are designed not to need lubrication. However, scoring of the bearings or wear marks indicate that lubrication or replacement of the bearings is required. Always use an approved bearing and grease that does not absorb dirt and moisture. Practice has proven that many do need oiling.

Some fans in newer installations and in remodeling are electronically commutated motors (ECMs). These motors often have manufacturer-specific diagnostic tools used to indicate problems and conditions. The motor may have a series of LED lights that indicate motor troubleshooting codes, such as a shorted winding or a circuit board that needs to be replaced.

Always be sure each motor is wired correctly. Voltage must be sufficient, and conductors must be sized sufficiently to carry the required current. Motors should be tested for grounds. Always ground the frame of a motor.

54.4 Checking Condensing Units

A condensing unit contains many important parts of a refrigeration system. The most important part is the compressor. This component creates the low pressure on the low side of the system and the high pressure of the high side of the system. In some commercial refrigeration applications, compressors are located with the condenser. In other applications, compressors are installed in a parallel rack or separate cabinet away from the condenser, **Figure 54-5**.

There are several types of compressor construction:

- Open-drive (external-drive) compressors.
- Semi-hermetic compressors (field-serviceable compressors).
- Hermetic compressors (welded, non-field-serviceable compressors).

Compressors may also be divided into categories based on their method of compression:

- Reciprocating.
- Rotary.
- Centrifugal.
- Screw.
- Scroll.

Copyright Goodheart-Willcox Co., Inc.

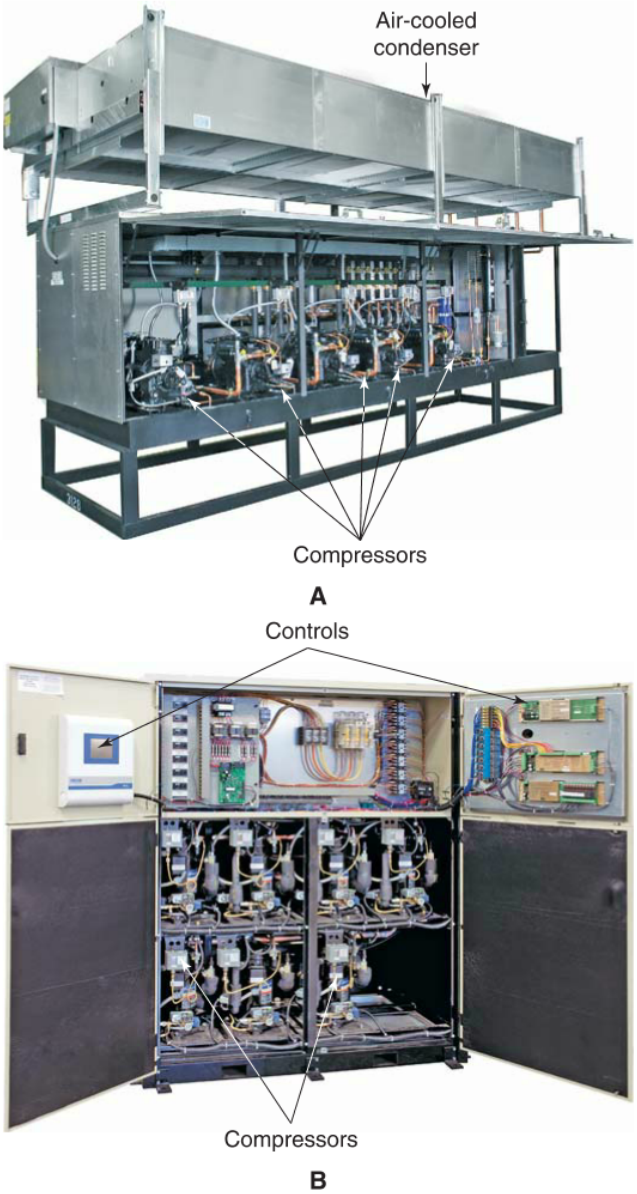

Zero Zone, Inc.

Figure 54-5. A—This parallel rack of compressors has an air-cooled condenser installed on top. B—This distributed system contains just compressors and their controls. Refrigerant is drawn from the evaporators of nearby conditioned spaces and pumped to a remote condenser located elsewhere.

Condensers may be divided into groups based on their cooling method:

- Air-cooled.
- Water-cooled.
- Evaporative.

The variety of mechanisms and applications is a great challenge to the service technician. However, there are certain basic problems all these condensing units have in common:

- Compressor efficiency.
- Condenser efficiency.
- Refrigerant charge.
- Refrigerant cleanliness.
- Electric circuit problems.

54.4.1 Checking Open-Drive Compressors

In most cases of a "no cooling" service call, the operation of the compressor should be checked first. Look for other indications of problems while checking the compressor, such as frosting of refrigerant lines or parts, oil spatter indicating a refrigerant leak, damaged parts, or smoking electrical components.

The amount of oil and its condition in a compressor are important. Erratic refrigeration and constant oil slugging or pumping in a compressor indicates excess oil in the system. This frequently occurs at start-up. Some compressors have a plug located at the proper oil level. Others have an oil level sight glass or port, **Figure 54-6**.

Two of the most common causes of trouble with open-drive reciprocating compressors are faulty seals

Bitzer

Figure 54-6. Compressor oil level sight glass.

Copyright Goodheart-Willcox Co., Inc.

and faulty inlet and discharge valves. Faulty valves may be detected by a sharp clicking noise in the compressor as it operates. Faulty valves will lead to compressor inefficiency. An inefficient compressor will have a high suction pressure and a low head pressure during operation.

Valves on open-drive compressors are serviceable by a manufacturer-approved repair facility and are sent out for remanufacture of the compressor. However, this may lead to significant downtime. Replacing the compressor may be more cost effective if valves are faulty.

Identifying Leaking Compressor Valves

Follow the steps below to determine if a compressor has leaking valves. It is important to identify such problems, as they reduce system efficiency and cooling capacity. This procedure tests leaking compressor valves for an open-drive compressor.

1. Install a gauge manifold and test for leaks, **Figure 54-7**.
2. Front seat the suction service valve by turning in the valve all the way. This will isolate the compressor from the suction line.
3. Turn the power on and off for a few seconds at a time. This allows a small amount of oil to circulate through the compressor, rather than pulling a large volume of oil through the valves when the suction side is under a vacuum. Then turn on the compressor and allow it to run.
4. Record the best vacuum obtainable against the normal head pressure for the refrigerant

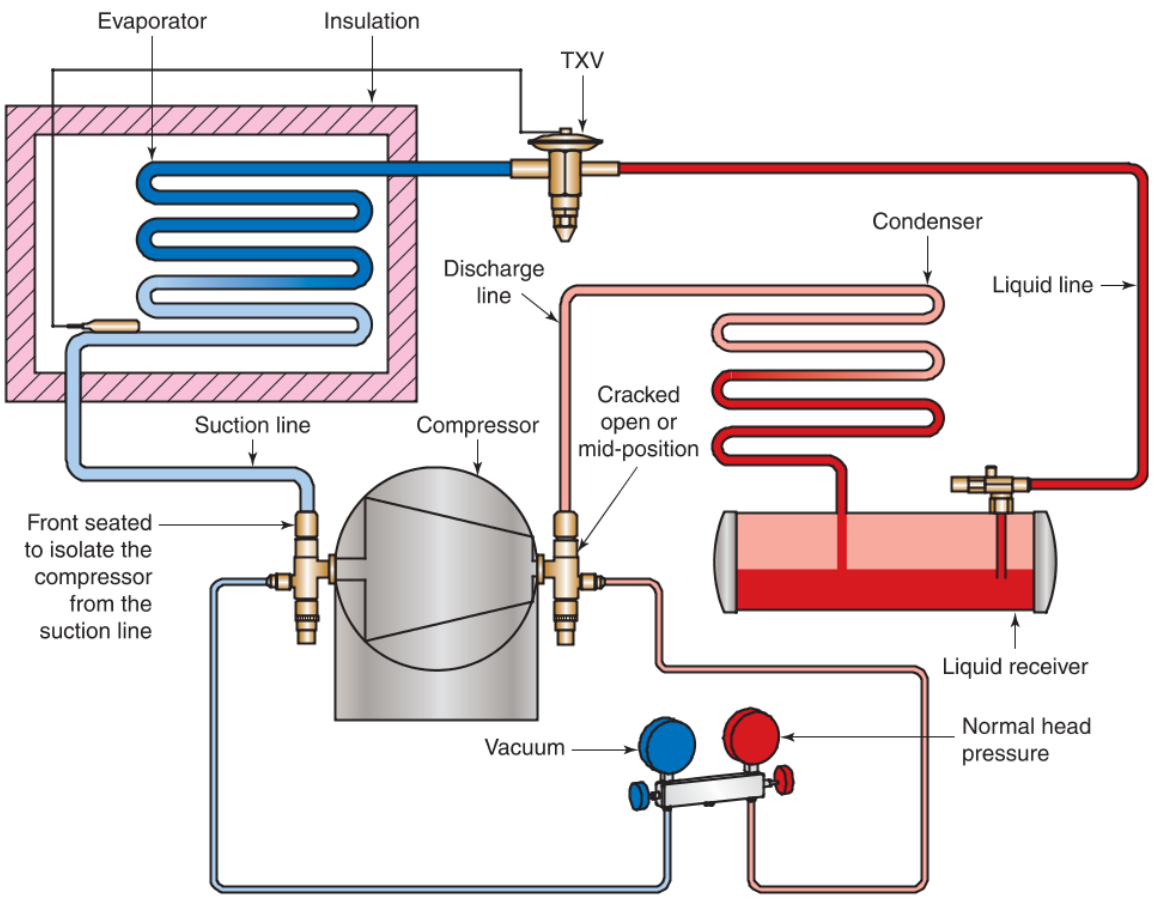

Goodheart-Willcox Publisher

Figure 54-7. To conduct an efficiency test for an open-drive compressor, close the suction service valve and run the compressor. Pumping efficiency will be indicated by the maximum vacuum obtainable and the time it takes to develop this vacuum.

Copyright Goodheart-Willcox Co., Inc.

being used: _____ in. Hg. Also record the time required to reach this level: _____ minutes/seconds.

The compressor should produce a vacuum greater than 20 in. Hg against normal head pressure. This is an indication that the valves are seating properly and the compressor is able to pull a full vacuum. If the compressor cannot pull a full vacuum, in most cases, it should be overhauled or replaced. Determine which option is more cost-effective.

A worn piston or cylinder is indicated by a clicking noise. This noise is somewhat duller than the clicking noise of a faulty valve. Worn connecting rods and main bearings are quite noisy when the compressor runs with a low-suction pressure. Open-drive compressors may be sent to a manufacturer-approved rebuild center or may be replaced, depending on which option is most cost-effective.

A compressor must pump a specified quantity of gas at a certain pressure difference. This is necessary to do the work required for refrigeration. It is difficult to check this, so the methods just described are used as secondary checks. Some compressor manufacturer-approved repair shops use a shop-mounted tank. The compressor pumps air into one of these tanks while being tested. The time required to pump to a set pressure around 150 psi (1035 kPa) is recorded for each size compressor. In this way, a relative volumetric efficiency check is possible.

Three conditions are important to determine if a compressor is operating within the manufacturer's specifications:

- Ability to produce a vacuum.
- Ability to produce high pressure.
- Ability to hold both vacuum and head pressure.

There are two ways to check if a compressor's exhaust valve leaks:

- In the first way, the SSV and DSV are front seated to close off the compressor from the rest of the system. A gauge manifold is installed across the compressor. The compressor is run shortly and then cycled off. The compressor pulls the compound gauge into a vacuum while building up high pressure at its discharge. Care should be taken to run the compressor only momentarily to prevent build-up of excessively high pressure. The suction and discharge pressure are monitored. If the exhaust valve leaks, the high head pressure will leak back through the exhaust valve, and the high-pressure gauge will show a drop in the pressure reading. A leaking exhaust valve could cause the suction pressure to begin to slowly rise. If suction pressure rises to approximately 0 psi, the intake valve is also leaking. A leaking exhaust valve needs repair.
- In the second way, connect a gauge manifold across the compressor. Front seat the discharge service valve stem by turning it all the way in. If possible, turn the compressor shaft by hand several turns to build up head pressure. If it is not possible to hand crank the compressor, briefly cycle on the compressor, taking care not to create excessive head pressure. Gauge pressure that fluctuates considerably indicates a leaky exhaust valve. If pressure merely increases and does not drop back much, the exhaust valve is not leaking. Shut down the compressor and observe the high-side pressure measurement. If it drops, the exhaust valve is leaking.

The inability of a compressor to produce a high vacuum indicates an intake valve leak. However, the vacuum produced is maintained after the compressor is shut off, but only if the exhaust valve is holding and not leaky.

Inability of a compressor to produce a high vacuum may also be due to other factors. These include too thick a gasket or worn piston and rings. Lack of oil will also result in poor pumping ability. Review a manufacturer's specification sheets to determine what pressure levels a compressor should be able to maintain. These pressure values will vary, especially in regard to a compressor's intended temperature range and cooling capacity.

Crankshaft Seal Leak Detection

The following test is used to determine whether a crankshaft seal of an open-drive compressor is leaking:

1. Connect the gauge manifold as shown in **Figure 54-8**. Be sure that both gauge manifold valves are turned all the way in, isolating each gauge from the central chamber.
2. Front seat the suction service valve by turning it all the way in.
3. For now, adjust the discharge service valve to mid-position.
4. Cycle on the compressor's motor to pump as high a vacuum as possible on the crankcase of the compressor.
5. Turn the discharge service valve all the way in to front seat it. Keep the compressor running.

Copyright Goodheart-Willcox Co., Inc.

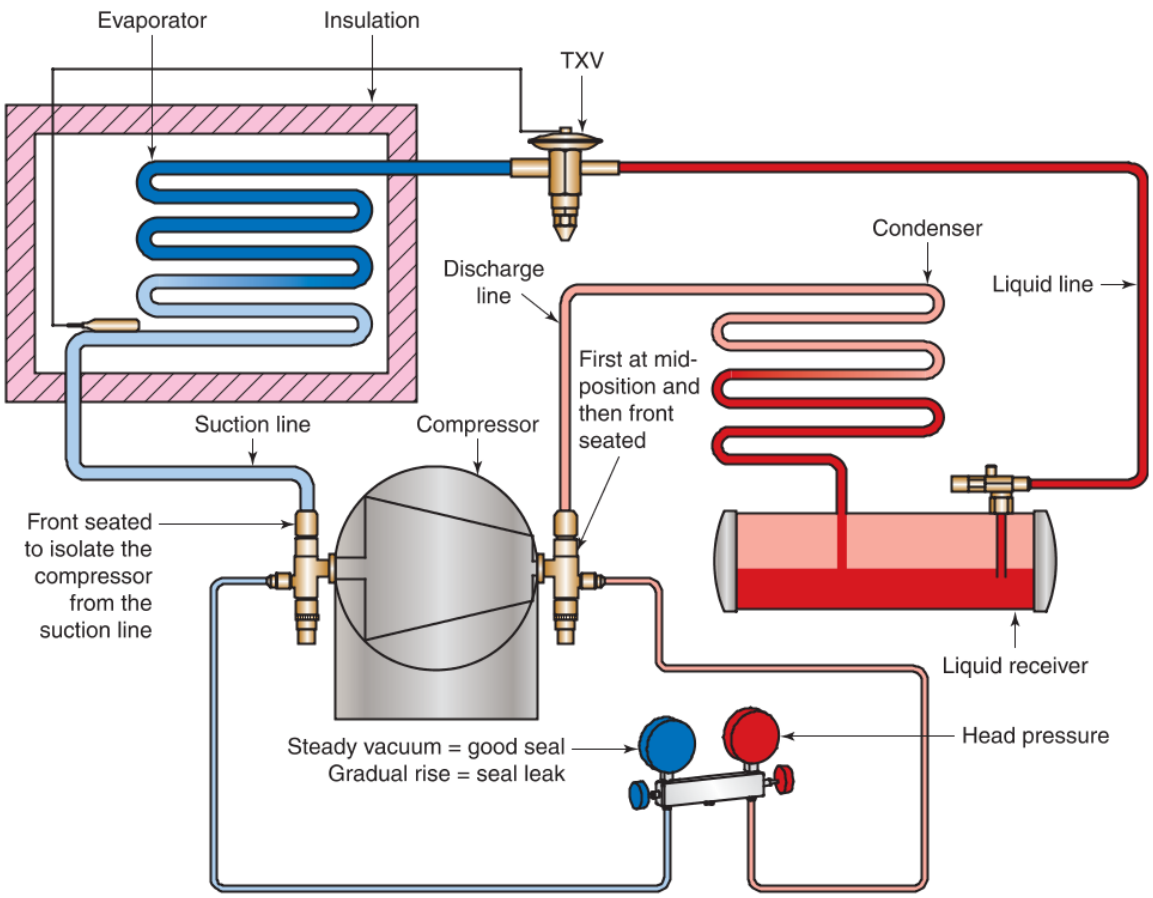

Goodheart-Willcox Publisher

Figure 54-8. Testing a compressor for low-side leaks is done by determining the best vacuum the compressor can create. If air or vapor is entering the compressor, the high pressure will increase.

6. Monitor the measurement of head pressure as indicated on the high-pressure gauge for a while.

If there is a low-side leak, the measurement of pressure will gradually increase as the compressor continues to run. This indicates that gas or air is being drawn in on the compressor low side through the crankshaft seal. However, if pressure levels off and remains steady, then the crankshaft seal is not leaking.

Traces of oil on a crankshaft seal or on the floor underneath the compressor indicate a seal leak. Leak detectors may also be used to check for a seal leak. To perform this check properly, the crankcase pressure must be over 0 psig. Also use your ears to listen for any gas movement to locate leaks.

54.4.2 Checking Hermetic Compressors

Two types of hermetic compressors are used in commercial refrigeration:

- Hermetic (welded) compressors.
- Semi-hermetic (bolted) compressors.

Hermetic compressors may or may not have service valves. Semi-hermetic compressors usually have service valves. Semi-hermetic compressors may be tested, removed, and overhauled. They are then retested and installed in a manner similar to an open-drive compressor. The motor that is built into the housing is usually tested and reconditioned at the same time.

Although semi-hermetic compressors may be remanufactured, the HVACR technician should consider the cost to do so, including the downtime of the unit while the compressor is out for repair. It is often

Copyright Goodheart-Willcox Co., Inc.

more cost effective to replace a compressor than to repair it, depending on the age and condition of the compressor.

Small welded compressors very seldom have service valves. Similar valves must be installed in these systems. One method of doing this is to use a piercing valve, **Figure 54-9**. Refer back to Chapter 10, *Equipment and Instruments for Refrigerant Handling and Service*, for information on installing these valves.

The condition of oil in hermetic compressors is very important. It should be tested to determine its acid level. The presence of acid in oil indicates that the oil is breaking down. It is reacting with the moisture and refrigerant it has contacted. The formation of acid often causes breaks in motor winding insulation causing localized hot spots in the motor windings. Checking can be done by removing an oil sample and using an oil test kit, **Figure 54-10**.

Most commercial compressors have an oil sump and oil drain to permit sampling and removal of compressor oil. Hermetic compressors will require the use of an approved refrigerant and oil recovery machine to remove, sample, and replace oil.

Sealed Unit Parts Co., Inc.

Figure 54-9. This piercing valve includes inserts for different diameter tubing.

Pro Tip

Acidic Compressor Oil

An oil sample is easily drained from semi-hermetic compressors. However, hermetic compressors usually require removing the compressor and draining some oil out of the suction line opening.

If the oil is acidic, the compressor should be thoroughly inspected. The motor windings should be checked for shorts and grounds. Motor winding failures may cause the compressor oil to become acidic. This is an indication that a motor failure is imminent and the compressor should be replaced.

Courtesy of Sporlan Division - Parker Hannifin Corporation

Figure 54-10. Kit used for testing refrigerant oil acidity.

Compressors require electrical power with specific characteristics. One of the first things technicians should check is whether the motor is operating with the correct voltage and current. Compare the electrical properties listed on the compressor's motor nameplate with the values measured. A variety of instruments will be necessary for measurement in order to acquire a full knowledge of a compressor's electrical characteristics, including voltmeters, ammeters, wattmeters, and power factor meters.

Voltage supplied to a compressor's motor must be no more than 10% below the motor's rated voltage and no more than 20% over. For instance, a 120 V motor should have a minimum voltage of 108 V and a maximum voltage of 144 V. This voltage should be read while the motor is running, not during starting or stopping when the level may temporarily drift.

The correct amount of current is vital to good operation. An in-line ammeter should never be connected across the line (in parallel). It must always be put in series with the electrical device being checked by interrupting one wire only in the circuit. However, whenever possible, avoid disturbing the wiring by using a clamp-on ammeter, instead of an in-line ammeter.

Carefully check external wiring and electrical controls for correct operation before assuming motor fault. First, turn off and lock out power to reduce your risk of electrical shock and injury. An ohmmeter is

Copyright Goodheart-Willcox Co., Inc.

often used to check continuity in these de-energized circuits. Check each circuit separately. Disconnect if there is a chance of parallel circuits.

Motor capacitors should be checked with a capacitor tester. Review text and procedures in Chapter 17, *Servicing Electric Motors and Controls*. Do not use older, unreliable methods of testing capacitors, such as shorting after charging. Such methods are inaccurate and dangerous.

Three main problems to check in a compressor's motor are open circuits, shorted windings, and grounded (shorted-to-ground) windings. For open circuits, the motor should be cool or at least not very hot, else internal overload devices may be open, giving a false open (infinity, ∞) reading. Normal winding resistance readings are usually low values, often in the single or very low double digits. Check manufacturer specification sheets for exact values. For shorted windings, compare ohmmeter readings with motor manufacturer resistance values. These are usually low values.

For grounded (shorted-to-ground) windings, conduct a preliminary resistance measurement test using an ohmmeter. These readings should be extremely high, such as infinity (∞). If this reading is lower than this, conduct a motor winding insulation test using a megohmmeter. Insulation breaks can be checked accurately only with this high-voltage tester. Handle carefully to avoid shocks. Review Chapter 17, *Servicing Electric Motors and Controls*, for additional information.

Companies report that many compressors that are returned and labeled as "faulty motor" actually have good motors. This false diagnosis indicates the need for careful checking. Always double check and record your readings for motor winding continuity, checks for shorts to ground, and current draw. **Figure 54-11** contains a list of typical motor and circuit troubles, their causes, and their remedies.

54.4.3 Checking Air-Cooled Condensers

Condenser capacity is the amount of heat a condenser can reject. The more heat a condenser can reject, the higher its capacity. Condenser capacity can rise or lower by changing a number of factors relating to the condenser.

Air-cooled condensers must have sufficient surface area to allow vapor refrigerant to expel heat into ambient air. In general, the more surface area a condenser has, the more heat it can expel from its refrigerant at a given rate of flow in a given period of time. For instance, heat rejection will be reduced in a condenser that contains more liquid refrigerant than normal. This is because the liquid refrigerant will be occupying surface area that should be occupied by vapor refrigerant. Reducing the surface area reduces the heat rejection, which reduces condenser capacity.

Another factor that may reduce a condenser's heat rejection is if the normal airflow around it is reduced. An air-cooled condenser relies on air to act as a medium that will carry away the rejected heat. If the medium does not carry away the heat, the condenser will not be able to reject as much heat as it normally could, reducing condenser capacity.

A third factor that reduces condenser capacity is when the temperature of the air is above normal. The lower the temperature of ambient air, the easier it is to reject heat into it. The greater the temperature difference, the easier the exchange of heat. High ambient air temperature creates a situation where the condenser is not able to reject as much heat as it normally could. Also, when condenser temperature rises, head pressure increases. This requires the compressor to draw more current to pump to the higher pressure.

If noncondensables (such as air) get into the refrigerant-circulating part of a system, it will collect in the condenser. This air cannot condense. Also, it will be stuck in the condenser, as it will be held back by a liquid trap in the liquid receiver or the lower end of the condenser. Each psi of air pressure will increase the head pressure by 1 psi. This increase in pressure will reduce the pumping efficiency of the compressor and increase the condensing temperatures. It also occupies space that otherwise would have been occupied by vapor refrigerant to reject heat.

Excessive head pressures are very hard on a refrigeration system. High head pressure causes high compressor discharge temperatures, which will cause the formation of sludge, carbon, and acid as the oil is broken down in the system. The suction and discharge valves may also be damaged.

High head pressures may be caused by:

- Excessively low suction pressure.
- Reduced condenser heat exchange caused by high ambient temperature, a dirty condenser, reduced airflow, etc.
- Noncondensables in the system.
- Overcharge of refrigerant.

If a condenser has high head pressure and a higher than normal temperature, examine the condenser. Ensure that the condenser fans are operating properly. Remove any obstructions to condenser air passageways. Clean the tubes and fins of any dirt or film. Some air-cooled condensers may be cleaned with a vacuum cleaner. However, more often technicians

Copyright Goodheart-Willcox Co., Inc.

Hermetic Compressor Service Chart	
Problems and Causes	**Remedies**
Compressor will not start—no hum.	
1. Open line circuit.	1. Check wiring, fuses, and receptacle.
2. Protector open.	2. Wait for reset—check current.
3. Control contacts open.	3. Check control, check pressures.
4. Open circuit in stator.	4. Replace stator or compressor.
Compressor will not start—hums intermittently (cycling on protector).	
1. Improperly wired.	1. Check wiring against diagram.
2. Low line voltage.	2. Check main line voltage, determine location of voltage drop.
3. Open starting capacitor.	3. Replace starting capacitor.
4. Relay contacts not closing.	4. Check by operating manually. Replace relay if defective.
5. Open circuit in starting winding.	5. Check stator leads. If leads are all right, replace compressor.
6. Stator winding grounded (normally will blow fuse).	6. Check stator leads. If leads are all right, replace compressor.
7. High discharge pressure.	7. Eliminate cause of excessive pressure. Make sure discharge shutoff and receiver valves are open.
8. Tight compressor.	8. Check oil level—correct binding condition, if possible. If not, replace compressor.
9. Weak starting capacitor or one weak capacitor of a set.	9. Replace capacitor.
Compressor starts, motor will not get off starting winding.	
1. Low line voltage.	1. Bring up voltage.
2. Improperly wired.	2. Check wiring against diagram.
3. Defective relay.	3. Check operation—replace relay if defective.
4. Running capacitor shorted.	4. Check by disconnecting running capacitor.
5. Starting and running windings shorted.	5. Check resistances. Replay compressor if defective.
6. Starting capacitor weak or one of a set open.	6. Check capacitance—replace if defective.
7. High discharge pressure.	7. Check discharge shutoff valves. Check pressure.
8. Tight compressor.	8. Check oil level. Check binding. Replace compressor if necessary.
Compressor starts and runs but cycles on protector.	
1. Low line voltage.	1. Bring up voltage.
2. Additional current passing through protector.	2. Check for added fan motors or pumps connected to wrong side of protector.
3. Suction pressure too high.	3. Check compressor for proper application.
4. Discharge pressure too high.	4. Check ventilation, restrictions, and overcharge.
5. Protector weak.	5. Check current—replace protector if defective.

Goodheart-Willcox Publisher

Figure 54-11. Refer to this chart for guidance in troubleshooting hermetic compressors. (*continued*)

Copyright Goodheart-Willcox Co., Inc.

6. Running capacitor defective.	6. Check capacitance—replace if defective.
7. Stator partially shorted or grounded.	7. Check resistances; check for ground—replace if defective.
8. Inadequate motor cooling.	8. Correct cooling system.
9. Compressor tight.	9. Check oil level. Check for binding condition.
10. Unbalanced line (three-phase).	10. Check voltage of each phase. If not equal, correct condition of unbalance.
11. Discharge valve leaking or broken.	11. Replace valve plate.
Starting capacitors burnout.	
1. Short cycling.	1. Reduce number of starts to 20 or less per hour.
2. Prolonged operation on starting winding.	2. Reduce starting load (install crankcase pressure regulator), increase voltage if low—replace relay if defective.
3. Relay contacts sticking.	3. Clean contacts or replace relay.
4. Improper relay or incorrect relay setting.	4. Replace relay.
5. Improper capacitor.	5. Check parts list for proper capacitor (mfd.) rating and voltage.
6. Capacitor voltage rating too low.	6. Install capacitors with recommended voltage rating.
7. Capacitor terminals shorted by water.	7. Install capacitors so terminal will not get wet.
Running capacitors burnout.	
1. Excessive line voltage.	1. Reduce line voltage to not over 10% above rating of motor.
2. High line voltage and light load.	2. Reduce voltage if over 10% excessive.
3. Capacitor voltage rating too low.	3. Install capacitors with recommended voltage rating.
4. Capacitor terminals shorted by water.	4. Install capacitors so terminals will not get wet.
Relays burnout.	
1. Low line voltage.	1. Increase voltage to not less than 10% under compressor motor rating.
2. Excessive line voltage.	2. Reduce voltage to maximum of 10% above motor rating.
3. Incorrect running capacitor.	3. Replace running capacitor with correct mfd. capacitance.
4. Short cycling.	4. Reduce number of starts per hour.
5. Relay vibrating.	5. Mount relay rigidly.
6. Incorrect relay.	6. Use relay recommended for specific motor compressor.

Goodheart-Willcox Publisher

Figure 54-11. Continued.

Copyright Goodheart-Willcox Co., Inc.

use a high-pressure jet of air, mechanical scrubbing, or pressurized water with detergent, **Figure 54-12**.

Safety Note

Eye Protection

Whenever operating pressurized gas or liquid equipment, be certain to wear goggles. Also, some form of eye protection is recommended when scrubbing or scraping surfaces that may chip or break off pieces.

Determining Head Pressure for an Air-Cooled Condenser

One of the most important pieces of information necessary for checking an air-cooled condenser is the proper value of a system's head pressure. A few steps are necessary in determining this value:

1. Measure and record the temperature of the ambient air around the condenser: _____ °F/_____ °C.
2. Add 30°F or 35°F (16.6°C or 19.4°C) to the value of the ambient air temperature: _____ °F/ _____ °C. This new value is the temperature at which the refrigerant condenses inside of the condenser. Note that if the condenser is high efficiency or microchannel, check with manufacturer literature to determine if the 30°F to 35°F temperature difference between condensing and ambient should be different.
3. Refer to the pressure-temperature (P/T) chart for the refrigerant used in this system. Corresponding values for common refrigerants can be found in the pressure-temperature charts in Chapter 9, *Introduction to Refrigerants* and in the *Appendix*.
4. Find the pressure value that corresponds with the temperature value calculated in the previous step: _____ psi. This pressure value is the proper head pressure for your system. Ideally, the refrigeration system will have this head pressure.

A variety of issues could cause head pressure to be higher than the value found corresponding in a P/T chart. For instance, noncondensables may be in the refrigerant circuit. Noncondensables in a refrigeration system become trapped in the condenser, where they occupy surface area space. As mentioned earlier in this

SpeedClean

Figure 54-12. Cleaning condenser tubes and fins maximizes heat exchange for improved system efficiency.

Copyright Goodheart-Willcox Co., Inc.

chapter, the less condenser surface area, the less heat can be rejected from the condenser. This results in a higher condensing temperature and a corresponding higher head pressure. (In a fixed volume, as pressure rises, temperature also rises.)

Another cause of higher head pressure could be clogged or obstructed air inlets and outlets. Both air inlets and air outlets must be free and clear of any debris or blockages. If air passageways are not clean and open, air movement is reduced. Less air movement means less heat is carried away from the condenser, meaning less heat can be rejected from the condenser. A reduction in heat rejection raises the temperature and pressure in the condenser.

Other factors affecting head pressure include incorrect refrigerant charges. An overcharge would cause high head pressure, as more liquid refrigerant would occupy condenser surface area and reduce heat rejection. An undercharge of refrigerant would result in a lower than normal head pressure.

Most commercial air-cooled condensers use forced convection. They have one or more fans for moving air through the condenser. Larger fans are either belt-driven or directly driven with a coupling. Fans, motors, and belts need regular maintenance and service.

Refrigeration systems with special arrangements and controls can maintain good head pressure when outdoor air-cooled condensers are exposed to colder temperatures, from 50°F (10°C) down to –10°F (–23°C). These include pressure-regulating valves, split condenser arrangements, air louver controls, electric heaters, and fan speed control and cycling. This information is explained in Chapter 21, *Heat Exchangers* and Chapter 22, *Refrigerant Flow Components*.

Service of outdoor air-cooled condensers depends on the types of head pressure control used. In all cases, condenser operation can be checked by blocking the condenser air inlet or outlet with cardboard. This will raise head pressure. Removing the cardboard will lower head pressure. This will quickly allow the HVACR technician to achieve the cut-in and cut-out pressure to confirm that the head pressure control is operating correctly. Use the following procedures according to type.

Troubleshooting Outdoor Condensers

Outdoor condensers may have electrical or mechanical failures. They often suffer from restricted airflow due to debris. Rooftop units can become clogged with bird nests and leaves. Ground units may be clogged with grass clippings and flower pollen. A close inspection often shows that outdoor condensers require cleaning.

1. First check the fan assembly for mechanical faults, such as a loose fan, bent blades, broken shroud, or worn belts and bearings.
2. Use a voltmeter to check for electrical power to the fan motor.
3. Use a clamp-on ammeter to measure starting current draw and running current draw.
   - Starting current measurement: _____ A.
   - Running current measurement: _____ A.
4. Compare these measurements with the manufacturer's specifications on the motor label.
   - Starting current specification: _____ A.
   - Running current specification: _____ A.
5. After taking measurements, shut off and lock out power, **Figure 54-13**.
6. Check the motor windings for shorts, opens, and shorts-to-ground using an ohmmeter. If ground readings seem suspiciously low, test for shorts-to-ground with a megohmmeter.
7. Check for continuity using an ohmmeter across any high-temperature cut-out controls. If the cut-out is stuck open, replace it.

Goodheart-Willcox Publisher

Figure 54-13. Shutting off and locking out power protects technicians from electrical dangers.

Copyright Goodheart-Willcox Co., Inc.

Troubleshooting Outdoor Condenser Louvers

1. Check louver and power element operation by blocking condenser airflow to see if the louvers will operate automatically.
2. If the louvers do not open after inlet airflow is blocked, inspect the louvers and all related mechanical parts. Debris may be blocking the free movement of the louvers. Part of the linkage may be broken or disconnected.
3. If the mechanical parts appear to be in good condition, then the power element, which is operated by head pressure, may be faulty. If possible, use gauges or a temperature survey to confirm that refrigerant is making it to the power element. Look for kinks in the refrigerant tubing running to the power element. Eliminate other possible causes of louver failure before replacing a power element.

54.4.4 Checking Water-Cooled Condensers

Water removes heat from metal surfaces about 15 times more rapidly than air can. This means that a water-cooled condenser of a given size can reject 15 times more heat than an air-cooled condenser of the same size. Therefore, water-cooled condensers can be built much smaller than air-cooled condensers. Also, since available water is often colder than ambient air, water-cooled condenser's temperature and pressure can be lower than those values of an air-cooled condenser of comparable capacity.

The temperature of the cooling water rises as it flows through the condenser. This temperature rise is expected as the heat absorbed from high-side refrigerant is not intended to change the phase of the cooling water. The temperature rise of water as it travels through a condenser should be limited. Water flow should be adjusted so temperature does not exceed a 15°F rise.

Determining Head Pressure for a Water-Cooled Condenser

There are only a few easy steps in calculating head pressure for a refrigeration system using a water-cooled condenser. Remember that the system must be running during measurements for these conditions and values to hold true.

1. Measure the temperature of the condenser water at the water outlet: _____ °F/_____ °C.
2. Add 10°F to 15°F (6°C to 8°C) to the measured value of the water temperature: _____ °F/ _____ °C. This calculated temperature is what the condensing refrigerant temperature should be.
3. Refer to the pressure-temperature (P/T) chart for the refrigerant used in this system. Corresponding values for common refrigerants can be found in the pressure-temperature charts in Chapter 9, *Introduction to Refrigerants* and in the *Appendix*.
4. Find the pressure value that corresponds with the temperature value calculated in an earlier step: _____ psi. This pressure value is the proper head pressure for this refrigeration system.
5. With the compressor still running, measure head pressure using a high-pressure gauge connected to the discharge service valve: _____ psi.
6. Compare the calculated head pressure and the measured head pressure. If the measured head pressure exceeds the calculated value by more than 5 psi, stop the compressor.
7. Recover the unit's refrigerant, evacuate the system, and recharge the specified amount of refrigerant according to the manufacturer. While the system's charge is recovered and the condenser drained of water, see if scale or buildup is present within the condenser. This could be reducing heat transfer and causing a corresponding increase in head pressure.
8. After recharging the system and returning water valves to the normal position, return the system to normal operation for several minutes.
9. Measure and record pressure and temperatures to verify that the system is operating within normal parameters.

Leak Testing a Water-Cooled Condenser

1. Check water flow by placing a flowmeter at the water inlet to the condenser. Compare the water flow rate to the manufacturer's required minimum flow rate.
2. Check for signs of scale build-up. Water leaks usually result in a build-up of lime and calcium

Copyright Goodheart-Willcox Co., Inc.

deposits around the water tubing, which can be easily detected.

3. Check for obvious signs of water leakage and cracked lines or burst fittings in the water plumbing.
4. Shut down the system, close off the water supply, and replace or clean any water inlet filters or screens.
5. Replace any damaged or leaking plumbing sections and fittings.

A common water-cooled condenser problem is the formation of scale deposits from water on the tubing walls. Minerals normally found in solution in water are drawn to the walls of the condenser tubing. These materials include carbonate, sulfate, lime, and iron. This process occurs because of the attraction of opposite charges of the minerals and the tubing. These deposits then act as an insulating layer, reducing the exchange of heat. Scale build-up is also a problem in cooling towers as it develops on the exterior of tubing, as shown in **Figure 54-14**.

All water-cooled heat exchangers should be included in a monthly maintenance plan depending on the type and usage of the system. Biodegradable treatments and mechanical brushes are used to periodically flush and clean heat exchangers and cooling towers. Cooling towers are first cleaned with a high-pressure washer and biodispersement product, which loosens dirt and debris for removal. The bacteria level of the cooling water should be checked. If bacteria is present, the coils must be disinfected with a chlorine-based solution to kill off bacteria.

Removing Scale Deposits from Water-Cooled Condenser Water Tubes

Before beginning this procedure, survey the system. Drain the water from the condenser's water circuit and valve off the proper pipes. Next, determine the best way to remove refrigerant from the condenser. This may include pumping down the charge into the liquid receiver or recovering the charge into a cylinder.

1. Remove all debris from filters and water catch basins.
2. Clean all exterior surfaces with a biodegradable detergent and high-pressure water.
3. Check all standing water for bacteria and pH levels.
4. Use an approved and certified cleaning company for mechanical wire-brush cleaning of heat exchangers and acid washing of scale and lime build-up.

Scale Free International

Figure 54-14. Scale build-up on the surface of cooling tower coils.

Regular maintenance of water-cooled condensers includes cleaning a system and preventing the buildup of scale. An acid-based solution is used on scale build-up in open water systems, such as cooling towers and evaporative condensers. The use of non-biodegradable materials is strictly controlled and harmful to the environment. Observe all EPA regulations when using or disposing of hazardous chemicals.

Safety Note

Poisonous Chemical Cleaners

When handling cleaners, be aware of any special labels or warnings. Some can be poisonous. Wear goggles, rubber gloves, and a rubber bib apron. Storage and handling of hazardous materials is strictly controlled by DOT and EPA regulations. Working with these substances should be done by certified technicians only. For this reason, cleaning of heat exchangers and cooling towers is normally handled by licensed and insured hazardous waste contractors.

Caution

Legionnaires' Disease (Legionella)

Untreated standing water has been linked to numerous outbreaks of Legionnaires' disease. The disease results in severe respiratory illness and even death. Legionnaires' disease is so named due to an outbreak in 1979 at an American Legion Conference in Philadelphia, Pennsylvania, where 29 members died and 182 people suffered pneumonia-like illnesses. Bacterial contamination in cooling tower water was suspected of transferring the disease to the airstream of the conference center, sickening those who were in attendance. As a result of numerous outbreaks, cooling tower water cleanliness is of utmost priority to a safe and healthy building environment.

Careless mixes of acid and water can ruin copper piping and steel structures. Some technicians do use

Copyright Goodheart-Willcox Co., Inc.

acids to descale, but it must be done rapidly. It must be cleaned as quickly as possible. Remember to wear goggles and rubber gloves. This task is best left for a certified technician.

A clogged or scaled water-cooled condenser can be recognized by checking the liquid line temperatures of the refrigerant. A corroded water-cooled condenser will have a hotter than normal liquid line. This holds true provided the refrigerant amount is correct and other troubles just mentioned are not found. Temperature and pressure in the condenser will be considerably higher than expected, as the waste heat is not removed from the condenser. Eliminate all other possible causes for excessive head pressure, such as overcharge and restrictions. When these possibilities have been eliminated, a badly corroded or dirty condenser is probably the cause.

Soft scale deposits are deposits that can easily be removed from some water-cooled condensers with a power-driven wire brush. This can usually be done without removing the condenser from the system. However, the water circuit must be closed and the unit shut down.

Pro Tip

Water-Cooled Condenser Gasket Replacement

The inlet and outlet of the water supply to a water-cooled condenser use gaskets to seal the connections. It is good practice to use new gaskets and tighten assembly joints to specification when servicing a water-cooled condenser.

There are "scale-free" systems that effectively eliminate the scaling process that causes deposits. Electronic scale treatment systems expose an electrolyte rod to the water to use as a positive ground. This process, in turn, picks up the electrical energy from the water. It is grounded to the outside of the condenser. Thus, the inside tubing is kept free from scale. This electrical energy also causes existing scale or deposits to go back into solution. They are then carried through the system and discarded.

There are two common signs that indicate troubles with water circulation in water-cooled condensers. One is the lack of cooling in the condensing unit. The other is too great a consumption of water.

Restricted Water Flow

If the water flow is inadequate, the cause might be one of the following:

- Leaking valve.
- Clogged screen.
- Chattering valve.
- Valve that is incorrectly adjusted.
- Sediment-bound valve.
- Leaking bellows.

In addition to these possible problems, leaking of the water-cooling system may also be the cause. Hard piped water lines sometimes flex and break at their joints, causing a leak. Some water-cooled systems use a length of rubber or plastic hose between sections of the water pipe. This hose is run along the wall and the condensing unit water lines. It eliminates the transmission of the condensing unit vibration into the building's plumbing system. It also prevents damage to tubes caused by this vibration.

Occasionally, someone may partially or completely shut off the water supply. This happens when a hand-operated valve installed in the system is closed. Always put signs near the shutoff valves, warning of the effect on the unit if these valves are closed.

If the water circulation is stopped, the refrigeration system will start to short cycle. Because water is not removing the heat, the condenser heats up, which also causes head pressure to rise. As head pressure rises, a high-pressure switch on the high side opens, stopping the compressor. Once the compressor has stopped, head pressure drops rapidly. This closes the high-pressure switch and allows the compressor to turn on again. Though the high-pressure switch is the control that is causing the system to short cycle, the root cause is the lack of water that allows heat and pressure to rise.

Short cycling will continue unless the lack of water is remedied. Such a condition is a severe strain on the compressor's motor. Furthermore, it does not provide satisfactory refrigeration.

Excess Water Flow

Excess water flow will result in lower condenser temperature and pressure. It is possible that excess water flow could cause reduced system efficiency. If anything, it results in excessive water usage. Depending on system setup, this could increase the cost of water and wastewater. Three common causes of this condition include:

- Water pressure too high.
- Water valve leaking.
- Water valve incorrectly adjusted.

Water pressure may be measured by a flowmeter. High water pressure to a system is seldom found, unless the water supply pressure is uncontrolled. If high water pressure is found in one system, it may be true for all the systems in that locality. If the local water pressure is too high for a manufacturer's specification, a restrictor or water pressure regulator may be

Copyright Goodheart-Willcox Co., Inc.

required to reduce the flow rate available to the water valve. Excess water flow is often due to either a leaking valve or a valve opened too far.

A further indication of excess water flow is a continuous flow of water during the Off cycle. Check for signs of scale build-up and water puddles around the valve that would indicate a leak. A leaking water valve is often caused by foreign matter between the valve and seat. This material can usually be dislodged by flushing the valve. The flushing may be done by opening the valve and manually cleaning and flushing water through the valve.

Tracing Water Circuit Troubles

If there are water circuit problems, the fault may be the water valve or some other part of the water circulating system. The exact source of the trouble must be located. Doing so will require disconnecting the water tubing joints along the system.

If possible, close the water inlet valve. Have a nearby bucket ready to minimize spillage. Then crack the water inlet valve open just a little to permit a small amount of water flow. Place the bucket under the joint to be opened. Crack open the joint to see if a steady stream of water flows to this point. Repeat this process down the line until the source of the restriction is found.

Disconnecting the water outlet pipe will show whether the water is flowing as far as this point. If it is, the connection should be resealed. The other end of the pipe must be disconnected from the wall pipe. If water does not flow up to this point, the trouble is probably in the drain pipe.

To determine whether water is coming as far as the water valve, disconnect the water valve's inlet pipe connection. If water flows through the pipe, either the water valve or the condenser is the problem. To check these sources, reseal the inlet pipe to the water valve and disconnect the water valve's outlet pipe going to the condenser.

If the water flows through the water valve but not through the condenser, the condenser water tubes will need to be replaced or cleaned. If the water does not flow through the water valve, the water valve must be disconnected and repaired or replaced.

A very noisy condition that is easily recognized is ***water hammer***, which is a single, distinct thump (rap) heard in the pipes just as a valve closes. Generally, this condition can be corrected by adding a T-fitting with a short, vertical pipe in the water line just upstream from the valve. It provides an air column that helps absorb the shock of the sudden stopping of water flow. Another method of reducing the surge of water is to install an expansion tank. This is a pressure vessel that allows for increased water volume and eliminates or reduces water hammering.

54.5 Checking Liquid Lines

The primary purpose of a liquid line is to deliver a steady stream of subcooled, high-pressure liquid refrigerant from a condenser or liquid receiver to an evaporator. However, it can also contain various inline components for specific purposes. Filter-driers clean and remove moisture from refrigerant. Sight glasses can show bubbles or vapor in the liquid refrigerant. Moisture indicators show the moisture content of the refrigerant. Hand and solenoid valves regulate flow for different operations.

While each component along a liquid line can improve system control and operation, they also provide another opportunity for a leak, a clog, or other failure. Components along the liquid line that should be inspected include the following:

- Hand shutoff valves.
- Sight glass.
- Moisture indicator.
- Inlet screen.
- Filter-drier (or dehydrator).
- Solenoid valves.

Each mechanical joint or brazed connection is a potential leak. Test all joints for leaks. Each kink, pinch, or buckled piece of tubing could be an unintentional pressure drop. When diagnosing refrigeration system problems, determine if each component has the proper capacity.

The liquid line should be the same size as the liquid receiver service valve connection. Check to be sure that reducer fittings have not been used. See Chapter 51, *Commercial Refrigeration Component Selection*, for recommended liquid line sizes. Many large units use various sizes of liquid lines.

Check the temperature of the liquid line. Perform a ***temperature survey*** of the liquid line. This involves taking and recording temperature measurements at different locations and comparing them. Good measurement points include before and after any in-line components (valves, filter-driers, sight glasses, etc.) and on each side of any other tubing connections.

A liquid line should be close to room temperature along its full length. A measurable temperature drop between the inlet and outlet of any component along the liquid line indicates a pressure drop. The more the temperature drop, the more the pressure drop. The pressure drop could be caused by a clog or other restriction. Sweating and even frosting may be seen on

Copyright Goodheart-Willcox Co., Inc.

the component causing the pressure drop. The pressure drop evaporates liquid refrigerant, which then absorbs heat. This cools the pressure drop component and causes sweating or frosting. This may also cause bubbles in the sight glass.

54.6 Checking Thermostatic Expansion Valves (TXVs)

A TXV problem may be diagnosed by observing affects on other parts of a refrigeration system. A problem with a TXV will manifest changes in the evaporator that can be seen, heard, and sensed by measuring temperature and pressure. The formation of frost on the evaporator and sometimes also on the suction line may be due to one of the following causes:

- The TXV needle may be leaking.
- The TXV's sensing bulb may be attached loosely to suction line, improperly located, or not properly insulated.
- Dirt or debris may be stuck in the valve and holding it open.
- The TXV's inlet screen may be clogged.
- The TXV may be adjusted for too little superheat.
- An external equalizer may be needed.
- The valve may have been repaired with the incorrect thermal bulb charge.
- The valve body may have been replaced with an incorrectly sized orifice.

Systematically check everything. Rule out the possible causes one by one. Use all pressure and temperature measurements and the sights and sounds of the system as you continue your diagnosis.

Before attempting to readjust a thermostatic expansion valve, check how its sensing bulb is mounted. A small detail like the location and attachment of a sensing bulb could have dramatic effects on a TXV's operation. Using the wrong kind of strap or placing the sensing bulb away from its proper place could result in erratic metering and improper refrigeration. A sensing bulb that has not been wrapped and insulated may form frost or sense the temperature of ambient air instead of suction line temperature.

The size of the suction line tubing will determine where the sensing bulb is placed along the tubing. A bulb placed too near a bend or turn of tubing may produce false signals from collected oil inside the tubing. A sensing bulb placed along a dirty length of tubing may not be able to sense heat as well as along a clean surface. Review sensing bulb mounting guidelines in Chapter 20, *Metering Devices*, and Chapter 52, *Installing Commercial Systems*.

If a TXV problem cannot be remedied, the valve may be internally worn or leaking. A leaking needle or valve in a TXV cannot be repaired. Replace the entire TXV.

A starved evaporator cannot adequately refrigerate its conditioned space and frosts unevenly or sweats improperly. This problem may be due to the following:

- Clogged inlet screen in the TXV, which may produce little or no refrigeration.
- Loss of refrigerant from a TXV's sensing bulb, which will give erratic (undependable) refrigeration.
- Frozen moisture in the TXV. A refrigeration system may produce good refrigeration for a while and then no refrigeration. Refrigeration stops after the moisture freezes in the valve's orifice. Refrigeration returns after the ice melts. Melting may happen during the Off cycle, or the TXV may need to be manually warmed.
- Wax from the oil accumulating in the TXV. The presence of wax means that the oil used was intended for a different temperature range. Otherwise, it may have been improperly prepared for refrigeration service. After the refrigerant and oil in the system are recovered, the system must be flushed, drawn into a vacuum, and charged with new oil and refrigerant.
- Needle stuck shut. (This is a rare occurrence.)
- Under-capacity valve orifice. It is usually recommended that a new valve be installed when an expansion valve gives trouble.

Sweating or frosting on the suction line beyond the sensing bulb indicates too much refrigerant flow. This condition may be caused by:

- A loose connection between the sensing bulb and the suction line.
- Warm airflow over a sensing bulb that is not insulated.
- Pressure drop in the evaporator is too great.
- TXV needle stuck open or unable to close fully.
- Undersized evaporator.
- Thermal bulb has wrong charge.
- TXV orifice is too large.

If a sensing bulb is loose, incorrectly mounted, or in a warm airstream, remove it. Clean the sensing bulb and the area where the sensing bulb will be mounted. Firmly secure the sensing bulb with the proper strap and insulate it to prevent ambient air from affecting TXV operation.

Copyright Goodheart-Willcox Co., Inc.

An oversized TXV should be replaced with one of the correct size. When a needle is stuck open, the best remedy is to replace the valve. Only rarely one finds the following problems:

- An undersized evaporator.
- A TXV diaphragm and bulb with the wrong charge (replace).
- Too great a pressure drop across the evaporator (replace the evaporator).

54.7 Checking Electronic Expansion Valves (EEVs)

Electronic expansion valves (EEVs) operate much like thermostatic expansion valves. However, the plunger pin, which controls refrigerant flow through the valve, is usually operated by a small electric motor, rather than mechanical pressure from a diaphragm. An EEV requires several main components for operation:

- A stepper motor that moves the plunger.
- An electronic temperature sensor that senses temperature.
- A pressure transducer that provides the controller with pressure levels for controlling superheat. Not all EEVs use a pressure transducer.
- A controller that processes the sensor data and controls the stepper motor.

Figure 54-15 illustrates the wiring diagram for a typical EEV system. In this example, two temperature-sensing thermistors are used to monitor evaporator inlet and outlet temperatures. A pressure sensor is also placed at the outlet of the evaporator for regulating superheat and pressure control.

An EEV is selected based on system refrigerant type, superheat required, and tubing diameter. Electronic control of EEVs results in fast reaction time for valve regulation and high system efficiency.

An EEV is connected to a controller that monitors refrigerant temperature by use of a small temperature sensor, as shown in **Figure 54-16**. Like a TXV's sensing bulb, an EEV's temperature sensor should be mounted firmly on straight tubing and insulated properly to obtain accurate readings. A controller receives temperature and pressure information from the sensors and sends out a signal to the EEV to open or close the valve orifice. **Figure 54-17** illustrates a typical controller with a digital readout.

Servicing EEVs requires knowledge of its controller. Most EEVs are highly durable and some faults may be a result of electronic failures. Controllers usually have a self-diagnostic function. Trouble codes are specific to each manufacturer. The service technician must determine if the problem is the controller or the valve.

Figure 54-18 shows one type of instrument used to test the step motor of an EEV. This tool is used to test continuity across the motor windings and actuate the valve from open to close and all points in between.

Similar to other expansion valves, moisture and contaminants may clog the orifice of an EEV. One

Service Call Scenario

54A: Walk-In Cooler—Lack of Cooling

Customer Complaint: Lack of Cooling

Possible Causes: Restricted TXV, loss of charge in the TXV thermal bulb, malfunctioning TXV.

Description of Problem: Mr. DiMaggio, the owner of a delicatessen, has reported that his walk-in cooler is no longer cooling. Prior to arriving at the jobsite, the technician, Remi, reviews the work order. Upon arriving at the building, she identifies herself to Mr. DiMaggio and listens carefully to his comments.

Testing: Remi visually observes the system and installs the gauge manifold to read the system's pressures. The pressures indicate that the evaporator is being starved of refrigerant. Remi further notices that the TXV metering device is partially frosted at the outlet. Her diagnosis is a restriction at the TXV as well as moisture in the system. The fine-meshed screen may also be clogged, resulting in the moisture creating ice and causing a restriction of refrigerant flow. Remi informs Mr. DiMaggio of the issues and offers solutions and the costs for such. Mr. DiMaggio agrees to have Remi perform the needed service.

Solution: Remi recovers the refrigerant. Next, she installs the TXV and the filter-drier. She evacuates and recharges the system to the manufacturer's specifications. Remi starts the unit and checks the pressures and temperatures. All of the readings are acceptable and the system is now cooling. Remi provides Mr. DiMaggio with the bill and informs him that a follow-up call will occur.

Safety: Always wear the proper eye and hand protection when charging or recovering refrigerant. Most refrigerants require charging in the liquid state and can cause serious injuries if one is not protected.

Copyright Goodheart-Willcox Co., Inc.

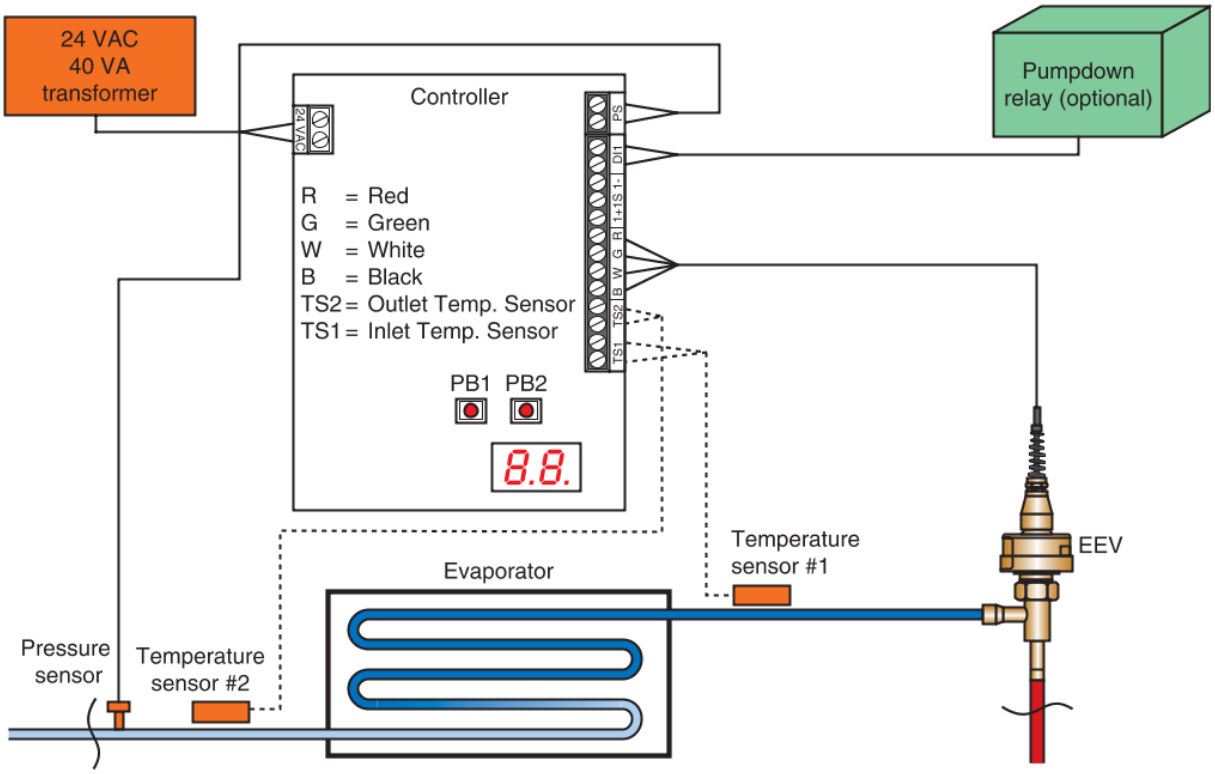

Courtesy of Sporlan Division - Parker Hannifin Corporation

Figure 54-15. Wiring diagram showing the controller connections and set up for an electronic expansion valve (EEV).

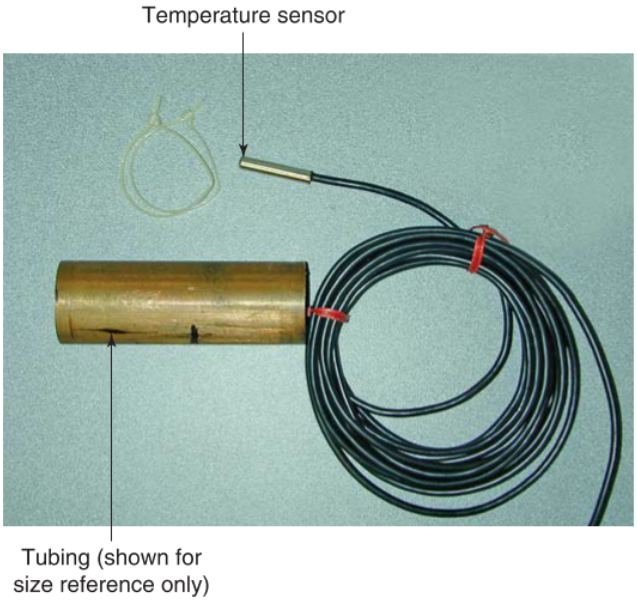

Courtesy of Sporlan Division - Parker Hannifin Corporation

Figure 54-16. Temperature sensor to be mounted on tubing to monitor temperature. The sensor sends an electric signal to a controller that can adjust an electronic expansion valve accordingly. Note that the copper tubing is shown as a reference to illustrate the small size of the temperature sensor.

with permission from Carel Industries - all right reserved

Figure 54-17. Electronic expansion valve controller showing superheat value and percent of valve opening.

Copyright Goodheart-Willcox Co., Inc.

Courtesy of Sporlan Division - Parker Hannifin Corporation

Figure 54-18. This electronic expansion valve diagnostic tool may be used to open, close, and test an electronic expansion valve.

advantage of EEVs is that they may be easily forced into a full open position to allow passage of any foreign particles.

54.8 Checking Evaporator Pressure Regulators (EPRs)

Firstly, it is important to remember that evaporator pressure regulators (EPRs) are called by many different names in the HVACR industry. It is important to be familiar with all of these names so misunderstandings can be avoided on the job. A brief list of other EPR names is as follows:

- Two-temperature valve.
- Holdback valve.
- Open on rise of inlet pressure (ORI) valve.
- Constant pressure valve.

As explained in Chapter 22, *Refrigerant Flow Components* and Chapter 49, *Commercial Refrigeration System Configurations*, EPRs are automatic. Each EPR maintains a higher pressure in an evaporator in a multiple-evaporator system. This pressure is higher than suction line pressure and is used to keep this evaporator at a higher temperature than the other evaporators. In a fixed volume, such as an evaporator, pressure and temperature rise and fall together.

Common troubles with EPRs include:

- Leaky valve.
- Valve stuck shut.
- Valve out of adjustment.
- Frost accumulation on bellows.
- Clogged inlet screen.

If an EPR is leaking, its evaporator will be too cold and operating below its preset temperature. There will be danger of freezing. Cold temperatures may also be due to other causes, including adjusting the EPR too low or problems with the refrigerant metering device. To determine the cause of the problem, check to see if the EPR has been adjusted recently by inspecting previous HVACR technician reports, if available. If the EPR has not been adjusted, the needle is probably leaking.

It is rare to have an EPR become stuck shut. It is easily recognized by a lack of cooling in its evaporator. There will be no refrigerant flowing through the EPR. To check refrigerant flow, check the pressure drop across the valve.

If the valve is suspected of being stuck shut, recover the refrigerant and replace the valve. By closing certain service valves and solenoid, less of the system will need to be opened to atmosphere for service. After replacing the EPR, pull a vacuum on the part of the system that was opened for service. Recharge the recovered refrigerant. Put the system back into operation. Observe EPR operation and any measureable system variables.

Some EPRs have inlet screens. A clogged screen is a likely cause of a higher than normal conditioned space temperature, as it stops the flow of refrigerant and allows heat to accumulate. Symptoms will be similar to the EPR being stuck shut.

Frost can accumulate on the bellows if the EPR is located in or near a freezing compartment. The valve should be relocated out of the freezing compartment.

An EPR having a gauge connection makes adjustment simple. Adjusting the EPR allows the technician to determine if the valve is leaking or out of adjustment.

Some EPRs operate thermostatically and have the same troubles as thermostatic expansion valves (TXVs). These include:

- Loss of charge from its thermostatic element.
- Frost accumulation on the bellows.
- Poor contact between the sensing bulb and the evaporator.

Copyright Goodheart-Willcox Co., Inc.

- Pinched capillary tube.
- Improper adjustment.

54.9 Checking Hot-Gas Valves

Components used to control hot gas vary with a system's application and demand. Hot gas can be used to defrost evaporators or be redirected into the suction line for capacity control.

Some hot-gas lines are regulated by a standard solenoid valve that simply opens and closes when needed. Others use a standard solenoid valve and also some type of flow-regulating valve. These flow regulation valves often look and operate in the same way as specific control valves that are commonly used as an HVACR system's refrigerant metering device. These include automatic expansion valves (AXVs), thermostatic expansion valves (TXVs), and electronic expansion valves (EEVs). For larger flow applications, a refrigeration system may use a pilot-operated solenoid valve.

Checking a refrigeration system's hot-gas valves involves identifying each valve used to control the flow of hot gas, understanding how each valve operates, and recognizing the symptoms that manifest if a hot-gas valve malfunctions.

If an evaporator with hot-gas defrost is not defrosting, check the defrost timer. If it is not running, determine the problem and repair or replace. If the defrost timer is working properly, turn the timer to the On position. The compressor should cycle on. If the compressor is not running, jump the proper defrost timer terminals to see if the compressor operates. To do this, review manufacturer literature. Otherwise, check defrost timer operation.

Once the compressor is running and the defrost timer is operating, check the hot-gas line. If it does not become warm, check the hot-gas valves. If the hot-gas line uses a solenoid valve, perform a simple temperature survey. See if the solenoid valve's inlet and outlet tubes are cold or hot. If one side is hot and the other cold, the solenoid valve is still closed.

If a hot-gas solenoid valve is sticking, gently rap the body of the valve. Note whether or not this action allows hot gas to flow. Check the electrical supply to the solenoid valve with a voltmeter. This will show whether there is power to the solenoid valve. If there is no power, review manufacturer literature and jump its contacts on its control device. If power is applied to a solenoid valve and it remains stuck, the solenoid valve must be replaced.

If a defrost timer is faulty, check its contacts. If they are corroded, replace them. If a solenoid coil is faulty, replace it. To determine a defrost timer's motor condition, disconnect wires after shutting off the power. Then check for open circuit or grounds.

For flow-regulating hot-gas valves, diagnose and repair problems that are specific to that type of hot-gas control valve: AXV, TXV, or EEV. Refer to earlier sections of this chapter and review each relevant refrigerant metering device section in Chapter 20, *Metering Devices*. Also review the different aspects of hot-gas systems covered in Chapter 21, *Heat Exchangers*, Chapter 22, *Refrigerant Flow Components*, and Chapter 49, *Commercial Refrigeration System Configurations*.

54.10 Checking Solenoid Valves

Solenoid valves develop both electrical and refrigerant troubles. Gently rapping a stuck solenoid valve may help it to become unstuck. The electrical connections may be dirty or loose. If so, the coil may not create enough electromagnetism to actuate the valve. Usually, the valve should be mounted with the coil on top and the valve level. If not, they may stick or chatter. Solenoid valves will sometimes develop a leaky needle and seat. In this case, the valve must be replaced.

54.11 Checking Evaporators

Dry (direct-expansion) evaporators must contain the proper amount of liquid refrigerant at the proper vapor pressure to provide their designed cooling. Air or water being cooled must flow in and out of the evaporators efficiently. Evaporators must be leakproof and properly sized. These conditions should be checked. Evaporators must also be regularly cleaned for good heat transfer.

Airflow through an evaporator can be checked with an anemometer. This instrument is also called an *air velocity meter*. Refer to Chapter 27, *Air Movement and Measurement* and Chapter 30, *Ventilation System Service* for additional information on using this instrument. If the air outlet or inlet is too small, airflow will be reduced, which can lead to inadequate cooling and abnormal system temperature and pressure readings. Air temperatures at the inlet and outlet can also be checked. The air temperature will usually drop about 15°F (8°C) as it passes through the evaporator. Check manufacturer literature for individual evaporators and their applied use.

Ideally, refrigerant pressure at the evaporator inlet (just after the refrigerant metering device) and at the evaporator outlet should be measured. This will show any pressure drop across the evaporator.

Copyright Goodheart-Willcox Co., Inc.

Service Call Scenario

54B: Beverage Cooler—No Cooling

Customer Complaint: No Cooling

Possible Causes: Plugged filter-drier, closed TXV, kinked liquid line, plugged metering device.

Description of Problem: Ms. Ohara, the owner of a small pub, has reported that her beverage cooler is no longer cooling. Prior to arriving at the jobsite, David, the technician, reviews the work order. Upon arriving at the pub, he identifies himself to Ms. Ohara and listens carefully to her comments.

Testing: David installs the gauge manifold to read the system's pressures. He then visually inspects the entire system. David notes that the system is a pump-down system and that the compressor appears to be starting and stopping quickly. He checks to see if the evaporator is receiving refrigerant. He then checks the liquid line solenoid valve for resistance. It reads infinite ohms. David concludes the cause is an open solenoid coil. David informs Ms. Ohara of the issues and offers solutions and the costs for such. Ms. Ohara agrees to have David perform the needed service.

Solution: David shuts the system's electrical power off and then removes and installs a new solenoid coil. He then restores the electrical power to the system and checks all operations. The unit is now operating properly and the pressures and temperatures are within normal readings. The system is now cooling. David provides Ms. Ohara with the bill and informs her that a follow-up will occur.

Safety: Remember to disconnect the electrical power source when replacing electrical components. Some components operate at high voltages that can cause serious injury. Follow the correct procedures when lockout devices are required.

Many service technicians only check low-side pressure at the suction service valve. While this may be the suction pressure, it will not reveal any restrictions or pressure drops along the suction line. Evaporator pressure may be higher due to a clogged filter-drier or kinked refrigerant line.

The best superheat setting is reached when a TXV's bulb temperature varies the least while the unit is running to prevent hunting of the valve. Location of the liquid in the evaporator can also be determined this way. Evaporator temperature should also be checked. The superheat setting of a TXV can be checked using spring-loaded, clip-on thermometer clamps mounted on the evaporator tubing, **Figure 54-19**.

Taking pressure and temperature measurements on an evaporator often reveal symptoms that are not the fault of the evaporator, but rather the system control devices. TXV, EPR, and hot-gas defrost valve operation all contribute to the appearance and condition of an evaporator. Use evaporator pressure and temperature measurements to diagnose which components are causing the evaporator to respond as it is.

Frost accumulation acts as insulation and also tends to reduce the airflow. Accumulation near the TXV usually means too great a superheat adjustment along with low suction pressures. Spotty frost usually means uneven airflow over the evaporator. Otherwise, it may indicate that some defrosting elements are not working.

Ritchie Engineering Co., Inc. – YELLOW JACKET Products Division

Figure 54-19. Superheat/subcooling calculators and other instruments often include thermistor clamps for taking temperature measurements.

Copyright Goodheart-Willcox Co., Inc.

Pro Tip

Leak Testing an Evaporator

When checking an evaporator for refrigerant leaks, the blower fan and the rest of the unit should be shut off. Low-side pressure should be at least 15 psig (100 kPa) when testing for leaks. System pressure levels below atmospheric pressure could allow air infiltration into the refrigerant circuit through any system leaks.

54.12 Checking Suction Lines

The primary purpose of a suction line is to deliver superheated, low-pressure vapor refrigerant from an evaporator to a compressor. However, a suction line can also contain various in-line components for specific purposes. An EPR maintains a higher pressure in its evaporator to regulate its temperature. A check valve prevents backflow between evaporators with different pressures. As in a liquid line, these components improve system control and operation, but they also provide another opportunity for a leak, a clog, or other system failure.

Servicing the suction line is much like servicing the liquid line. Components to inspect include:

- Hand shutoff valves.
- Vibration absorbers.
- Check valves.
- Evaporator pressure regulators (EPRs).
- Filter-driers.
- Accumulators.
- Any joints or connections.

Check each mechanical joint and brazed joint for leaks. Check the suction line for any kinks, pinches, buckles, or deformations. These reduce refrigerant flow and cause pressure drops.

Suction line size is important. If it is too small, it will cause too much pressure drop. High gas velocities will cause noise. A small suction line can reduce a compressor's capacity and increase its power usage by forcing it to pump a higher volume of refrigerant vapor to maintain the desired temperature in the evaporator. The suction line should be the same size as the suction service valve connection or the suction line connection on the compressor.

On multiple-evaporator systems, the suction line for each evaporator may be smaller than the main suction line. For example, the most remote evaporator may have a 1/2″ (12.7 mm) OD suction line. Each evaporator closer to the compressor would have a larger suction line, as follows: 5/8″ (15.875 mm) OD, 1″ (25.4 mm) OD, 1 1/2″ (38.1 mm) OD. The suction line connected to the compressor may be 2″ (50.8 mm) OD. See Chapter 51, *Commercial Refrigeration Component Selection*.

In a multiple-evaporator system, pressure drop should be checked by installing a compound gauge at the most remote evaporator and another compound gauge at the compressor. Record these low-side

Service Call Scenario

54C: Walk-In Freezer—No Cooling

Customer Complaint: No Cooling

Possible Causes: Defective heater element, open defrost limit switch, faulty defrost timer.

Description of Problem: Ms. Rossi, owner of a small restaurant, has reported that her walk-in freezer is no longer cooling. She is quite concerned as she has thousands of dollars of frozen meats stored there. Prior to arriving at the jobsite, the technician, Tony, reviews the work order. Upon arriving at the restaurant, Tony identifies himself to Ms. Rossi and listens carefully to her comments.

Testing: Tony installs the gauge manifold to read the system's pressures. He visually observes the system's operation. While inspecting the evaporator, he notes that it is completely covered with ice build-up. Tony next checks the defrost timer and sees that the defrost contacts are stuck open. The contacts will not close in order to allow the unit to defrost automatically. Tony bypasses the contacts to make certain the electric heaters become energized and that there are no open components within the defrost circuit. He observes that the electric heaters do heat up, which confirms that the defrost timer is faulty. Tony informs Ms. Rossi of the issue and offers the solution and the cost for such. Ms. Rossi agrees to have Tony perform the needed service.

Solution: Tony installs a new defrost timer. He again initiates defrost to confirm that the cooler is automatically going in and out of defrost mode as it should. The system's evaporator is now thawed and all system operations are now working properly with normal pressures and temperatures. Tony provides Ms. Rossi with the bill and informs her that a follow-up call will occur.

Safety: When working on walk-in freezers, wear protective clothing such as gloves, eye protection, and warm clothing. Walk-in freezers can be extremely cold and can cause frostbite

Copyright Goodheart-Willcox Co., Inc.

pressures when the compressor is running. The difference between these two pressure measurements is the ***suction line pressure drop***. It should be approximately 2 psi (14 kPa). If the pressure drop is more than 2 psi (14 kPa), the refrigerant line sizes may need to be increased or some sort of restriction in the line may be causing a pressure drop.

When checking suction line pressure drop, the pressure drop across EPRs should also be checked. Their pressure drops are separate from the suction line pressure drop. For suction line pressure drop, measure pressure just past the EPR on the suction line side. This will be past the evaporator and in the suction line. Compare this value with a pressure measurement at the compressor from the suction service valve.

Pro Tip

Suction Line Pressure Drop

Suction line pressure drop should not be excessive. However, before replacing any suction line with larger diameter tubing, try to determine if the pressure drop is caused by a restriction, rather than undersized tubing. Look for any kinked or deformed tubing that may be reducing pressure. Check any filter-driers or other in-line components with a temperature drop between its inlet and outlet. Use an infrared thermometer for an initial examination. This temperature drop may indicate a pressure drop from a clog or other restriction. Doing a temperature and pressure survey can help in finding the real cause of a suction line pressure drop and avoid wasted labor and parts.

Copyright Goodheart-Willcox Co., Inc.

Summary

- When troubleshooting an electrical circuit, thoroughly review any wiring diagrams. When checking voltage drops and current draw, exercise extreme caution as power must be on. When checking resistance or continuity, turn off and lock out power. Motor sounds may help in determining a problem.
- Mechanical trouble on external motors includes misalignment, excessive end play, and faults in the bearings and pulleys. Check sheave wear with a wear gauge.
- Open-drive compressor problems include faulty valves that click, seals that leak refrigerant and oil, excess oil that chugs, and noisy, damaged mechanical parts.
- The condition of the refrigerant oil in hermetic compressors should be checked for its level of acidity. Early detection allows technicians to replace the oil, install new filter-driers, and prevent compressor failure.
- Condenser capacity is the amount of heat a condenser can reject. The more heat a condenser can reject, the higher its capacity. Air-cooled condensers need to have unobstructed airflow passageways, clean tubes and fins, properly operating fans, and properly calibrated head pressure control devices.
- A common problem in water-cooled condensers is the formation of mineral deposits within the water circuit that inhibits heat exchange, raises head pressure, and reduces system efficiency. Cleaning solutions and equipment can often remove mineral deposits, though condenser replacement is necessary in extreme cases.
- Reduced water flow through water-cooled condensers can result from leaking valves, clogs, poorly calibrated controls, or faulty controls. Excessive water flow results from water pressure being too high, leaking valves, or improperly calibrated valves.
- Components along a liquid line to inspect include shutoff valves, sight glasses, moisture indicators, inlet screens, filter-driers, solenoid valves, and all tubing joints and connections. These and any pinched or buckled length of tubing can cause a clog or pressure drop.
- Problems with a TXV are usually evident by how they affect the evaporator. Frost on evaporator tubing is commonly caused by a leaking TXV, a poorly installed sensing bulb, or a clogged inlet screen.
- As with TXVs, EEV problems affect the evaporator. Troubleshoot an EEV as you would troubleshoot a TXV, but also use any diagnostic codes and features available on an EEV's controller.
- Common EPR problems include leaking valves, poor calibration, frost accumulation on bellows, clogged inlet screens, and being stuck shut. Troubleshoot using pressure and temperature surveys.
- A hot-gas valve may be a standard solenoid valve or some type of flow-regulating valve, resembling some type of expansion valve (TXV, AXV, or EEV). Systems may use one or more solenoid and flow-regulating valve to control the flow of hot gas. When a hot-gas function is not operating properly, use a temperature survey to determine if and where hot gas is flowing. Check system controls for proper operation.
- Solenoid valves are electrically operated valves that open and close. Operation can be checked mechanically and electrically. Depending on their use, solenoid valves may also be checked using temperature and pressure surveys.
- Evaporators need to be clean and have unobstructed airflow passageways. Frost accumulation, lack of cooling, and other problems associated with evaporators are often caused by problems from controls devices, such as refrigerant metering devices (expansion valves), EPRs, and hot-gas defrost valves.
- Components along a suction line to inspect include shutoff valves, check valves, EPRs, inlet screens, filter-driers, and accumulators. These and any pinched or buckled length of tubing can cause a clog or pressure drop. A simple temperature survey can indicate a pressure drop.

Copyright Goodheart-Willcox Co., Inc.

Review Questions

Answer the following questions using the information in this chapter.

1. Electrical wiring to a particular refrigeration unit must be sized large enough for proper _____.
   A. current
   B. pressure
   C. viscosity
   D. voltage
2. To check continuity on a system's electrical circuit, turn off and lock out the power before using a(n) _____.
   A. ammeter
   B. gauge manifold
   C. ohmmeter or continuity tester
   D. voltmeter
3. When an external motor is operating properly, it will emit _____.
   A. erratic squeals
   B. a low, steady hum
   C. a melodic screeching
   D. rotor chattering
4. When an open-drive compressor has faulty valves or faulty seals, it will most likely cause _____.
   A. compressor inefficiency
   B. high head pressure
   C. low suction pressure
   D. short cycling
5. When testing across a hermetic compressor's motor windings, a false open circuit measurement may be caused by a(n) _____.
   A. contactor with pitted contacts
   B. faulty unit controller
   C. good current relay
   D. overheated internal overload device
6. When testing a hermetic compressor's motor for grounded windings (shorted-to-ground), measurements on good windings would show _____.
   A. 0 Ω
   B. 5–25 Ω
   C. 500–1000 Ω
   D. extremely high resistance (infinity, ∞)
7. Condenser capacity is the _____.
   A. amount of heat a condenser can reject
   B. condenser's inner surface area
   C. high pressure limit a condenser can withstand
   D. high temperature limit a condenser can withstand
8. Common causes of reduced capacity in air-cooled condensers include the following, *except* _____.
   A. high ambient temperature
   B. low ambient temperature
   C. noncondensables trapped in the condenser
   D. reduced airflow
9. Common causes of high head pressure in air-cooled condensers include the following, *except* a(n) _____.
   A. noncondensables trapped in the condenser
   B. overcharge of refrigerant
   C. reduced condenser heat exchange
   D. undercharge of refrigerant
10. A common problem found in water-cooled condensers that reduces heat exchange is the formation of mineral deposits _____.
    A. in the electrical circuit
    B. in the refrigerant circuit
    C. in the water circuit
    D. on the outside of the compressor
11. Inadequate water flow through a water-cooled condenser may be caused by the following, *except* a water valve _____.
    A. connected to high water pressure
    B. stuck shut
    C. with a clogged inlet screen
    D. with leaking bellows
12. Common indications of a pressure drop across an in-line component in the liquid line can include the following, *except* _____.
    A. frosting
    B. having higher temperature than the liquid line
    C. sweating
    D. a temperature drop between the component's inlet and outlet
13. The HVACR problem that a leaking TXV unable to close fully is most likely to cause is _____.
    A. corrosion in a water-cooled condenser
    B. high head pressure
    C. noncondensables in the condenser
    D. short cycling
14. When there is a problem with a TXV, symptoms will most often manifest changes that can be seen, heard, or sensed by temperature and pressure in the _____.
    A. accumulator
    B. compressor
    C. evaporator
    D. liquid receiver

Copyright Goodheart-Willcox Co., Inc.

15. The following reasons explain why a TXV may be operating incorrectly, *except* because its sensing bulb is _____.
    A. hanging loose in mid air
    B. installed with the wrong type of strap
    C. properly insulated
    D. secured at the wrong angle along the tubing
16. Common industry names used to refer to EPRs include the following, *except* _____.
    A. constant pressure valves
    B. holdback valves
    C. low ambient control valves
    D. two temperature valves
17. When troubleshooting an electronic expansion valve (EEV), a technician should be familiar with the following, *except* _____.
    A. any self-diagnostic functions
    B. any trouble codes
    C. an EEV's controller
    D. sensing bulb and diaphragm condition
18. Hot-gas valves that can vary and regulate the flow of hot gas include the following types, *except* _____.
    A. AXV
    B. EEV
    C. solenoid valve
    D. TXV
19. If a commercial refrigeration system's suction line tubing is too small, it can cause the following, *except* _____.
    A. high gas velocities
    B. reduced compressor capacity
    C. too little pressure drop
    D. too much pressure drop
20. When servicing a suction line, inspect the following, *except* _____.
    A. accumulators
    B. any joints or connections
    C. sight glasses
    D. valves

Copyright Goodheart-Willcox Co., Inc.

CHAPTER 55 Servicing Commercial Systems

Chapter Outline

55.1 System Service Fundamentals
- 55.1.1 Isolating Part of a System for Service
- 55.1.2 Reassembling Refrigeration Systems

55.2 Servicing Motors and Compressors
- 55.2.1 Servicing External Motors
- 55.2.2 Servicing Hermetic Motor Burnouts
- 55.2.3 Adding Oil to a Refrigeration System

55.3 Servicing Condensers
- 55.3.1 Servicing Air-Cooled Condensers
- 55.3.2 Servicing Water-Cooled Condensers
- 55.3.3 Servicing Cooling Towers

55.4 Servicing Liquid Lines

55.5 Servicing Evaporators
- 55.5.1 Removing Evaporators
- 55.5.2 Repairing Evaporators
- 55.5.3 Installing Evaporators

55.6 Servicing Valves
- 55.6.1 Servicing Expansion Valves
- 55.6.2 Servicing Evaporator Pressure Regulators (EPRs)
- 55.6.3 Replacing Hot-Gas Valves
- 55.6.4 Replacing Service Valves
- 55.6.5 Replacing Solenoid Valves

55.7 Reconditioning Equipment after a Flood

Learning Objectives

Information in this chapter will enable you to:

- Properly pump down or move the refrigerant charge for system service.
- Perform atmospheric balancing (pressure equalizing) before opening a system to atmosphere for service.
- Safely remove a compressor from a system for replacement.
- Safely replace an external electric motor.
- Safely service a refrigeration system with a motor burnout in a hermetic compressor.
- Add refrigerant oil to a refrigerant system using several different methods.
- Safely remove, repair, and install air-cooled and water-cooled condensers.
- Diagnose and repair or replace water valves.
- Perform basic cooling tower maintenance.
- Diagnose and repair liquid line problems.
- Remove, repair, and install forced-air evaporators.
- Remove, repair, and install expansion valves.
- Adjust the setting of a thermostatic expansion valve (TXV).
- Diagnose, repair, install, and adjust evaporator pressure regulators (EPRs) and hot-gas valves.
- Remove and replace service valves and solenoid valves.

Technical Terms

atmospheric balancing
burnout filter-drier
fin comb
jumpered

Review of Key Concepts

Reviewing these concepts from earlier chapters will help you understand new concepts presented in this chapter:

- An important part of HVACR system service is isolating parts for service using refrigerant recovery or system pump down. (Chapter 11)
- Properly evacuating a system before charging promotes optimal operation and reduces the risk of equipment failure. (Chapter 11)
- Service for external motors deals with electrical or mechanical problems. (Chapter 17)
- Motor failure and erratic system performance may be due to the motor control system. (Chapter 17)
- Understanding the operation of refrigerant metering devices is necessary in servicing an HVACR system. (Chapter 20)
- Understanding the use and operation of various refrigerant flow components is necessary in servicing an HVACR system. (Chapter 19)
- Service procedures for domestic refrigeration appliances address many of the same problems found in commercial refrigeration systems. (Chapter 26)

Introduction

The servicing of commercial refrigeration systems is much like working on domestic systems. However, in commercial refrigeration, multiple evaporators on a single suction line is common. Also, a single suction line may flow into one or several compressors in parallel. Since commercial refrigeration condensers operate throughout the year, they use some method of head pressure control, such as fan cycling, variable frequency drives, louver opening and closing, pressure-regulating valves (low-ambient controls), split condenser arrangements, and electric heaters. Unloading and defrosting subsystems add to service complications.

Videos

- Isolating Components
- Cleaning Condensers

55.1 System Service Fundamentals

In most communities, local refrigeration code determines the servicing of large commercial systems. Major repairs or changes to a commercial system can be done by only licensed contractors. When completed, their work must be checked by the local community refrigeration inspector. Plumbing and electrical service work should be performed by licensed plumbers and electrical contractors.

When part of a commercial refrigeration system needs service and will be inoperable for a time, empty the contents of the conditioned space cabinet. If this is not possible, move all the contents to one side and cover them. Spread a drop cloth around and under any components to be serviced. This will catch any moisture or other fluids, which will minimize cleanup, avoid property damage, and prevent personal hazards.

Care should be taken when disassembling interior and exterior parts of the unit's cabinet. Chipping or cracking of enamel surfaces may necessitate replacing a complete panel. Do not soil enamel finishes with oil or grease.

Tools and materials should be in a safe place to prevent injury from tripping. Always provide good lighting. Internal parts of a machine must be kept as chemically clean as possible. Moisture can freeze in low temperature passages. Filter-driers and strainers should be checked regularly. Dirt and debris may clog screens and cause wearing of metering devices, control valves, compressor valves, and valve seats.

Opening a Refrigerant Circuit for Service

When opening any part of a system to remove or service components, follow these general steps:

1. Pump down or recover the refrigerant from the part to be opened.
2. Isolate parts to be opened from the rest of the system by closing certain service or shutoff valves.
3. Balance pressures in parts of the system just evacuated to 0 psi to prevent ambient air infiltration.
4. Clean and dry joints to be opened.
5. Immediately plug all refrigerant openings as soon as they are opened.

55.1.1 Isolating Part of a System for Service

When a system's refrigerant circuit must be opened for service, refrigerant must be removed from the part of the system that will be opened to atmosphere. In many cases, the refrigerant charge can be pumped down into the liquid receiver. However, if there is no place within a refrigeration system to store its refrigerant charge, the charge must be removed from the system and stored in a recovery cylinder.

Refrigerant is pumped down into the liquid receiver by first installing a gauge manifold in the system. The service valves are properly adjusted depending on the system. Finally, the compressor is operated.

Recovery of refrigerant from any part of a system requires a low pressure to draw out the refrigerant from the part to be dismantled. This is done in order to evaporate the refrigerant from it. The low pressure evaporates and then draws out the refrigerant, **Figure 55-1**.

The pressure in the part of the system to be opened to atmosphere must be equalized to 0 psig or slightly higher by bypassing a small amount of vapor refrigerant into it. This process is called ***atmospheric balancing***. It may also be known as *pressure equalizing* or *balancing pressures*. How this is done depends on the refrigeration system, the part of it needing service, and the instruments and equipment available.

Often, a refrigerant charge is pumped down into the liquid receiver for low-side service. In this case, a technician can bypass refrigerant vapor from the high

Goodheart-Willcox Publisher

Figure 55-1. An HVACR system in a slight vacuum after refrigerant recovery.

Copyright Goodheart-Willcox Co., Inc.

side through the gauge manifold into the low side for atmospheric balancing, **Figure 55-2**.

If a refrigerant charge was recovered from a system and stored in a cylinder, a small amount of refrigerant vapor could be valved from the recovery cylinder through the gauge manifold and into the low side or high side of the system as needed.

Atmospheric balancing prevents air and particles from rushing into the system when opened. Balancing pressure is very important. If the system were left in vacuum when opened for service, contaminants and noncondensables would infiltrate the refrigerant circuit. Such unwanted contamination could cause a variety of problems.

General steps to follow when isolating a system component:

1. To begin refrigerant recovery, front seat the inlet service valve to the part to be serviced.
2. Run the compressor until the gauge shows 0 psig or a slight vacuum. At that point, stop the compressor.
3. Front seat the outlet service valve to the part to be serviced.
4. Gently crack open the inlet service valve until the gauge reads zero. At zero, front seat the inlet service valve to the part.
5. Clean and dry the joints surrounding the part to be serviced.
6. Remove the part and plug any openings immediately. Always plug all refrigerant openings immediately after removing the part. This is necessary in order to keep out dirt and moisture.

For example, if a technician must remove a compressor, evaporator, or TXV, the refrigerant should be stored in the liquid receiver. The liquid receiver service valve is closed. The compressor is run until no liquid refrigerant is in the liquid line, evaporator, or suction lines. If there is no place to store the refrigerant in the system, the refrigerant must be removed from the system and stored in a recovery cylinder.

Pro Tip

Isolation Valve Options

When isolating sections of a refrigerant circuit, close the valves that make the most sense. Minimize the amount of tubing and components that must be emptied. The best valve to close may be the liquid receiver service valve. However, if the system has liquid line manifold valves feeding individual evaporators, then these could be closed, so the entire liquid line would not need to be emptied. Instead of manifold valves, a system may have a liquid line solenoid valve. Isolating the least amount of the refrigerant circuit saves time. Evaluate the system and determine which valve or valves are best to close for system isolation.

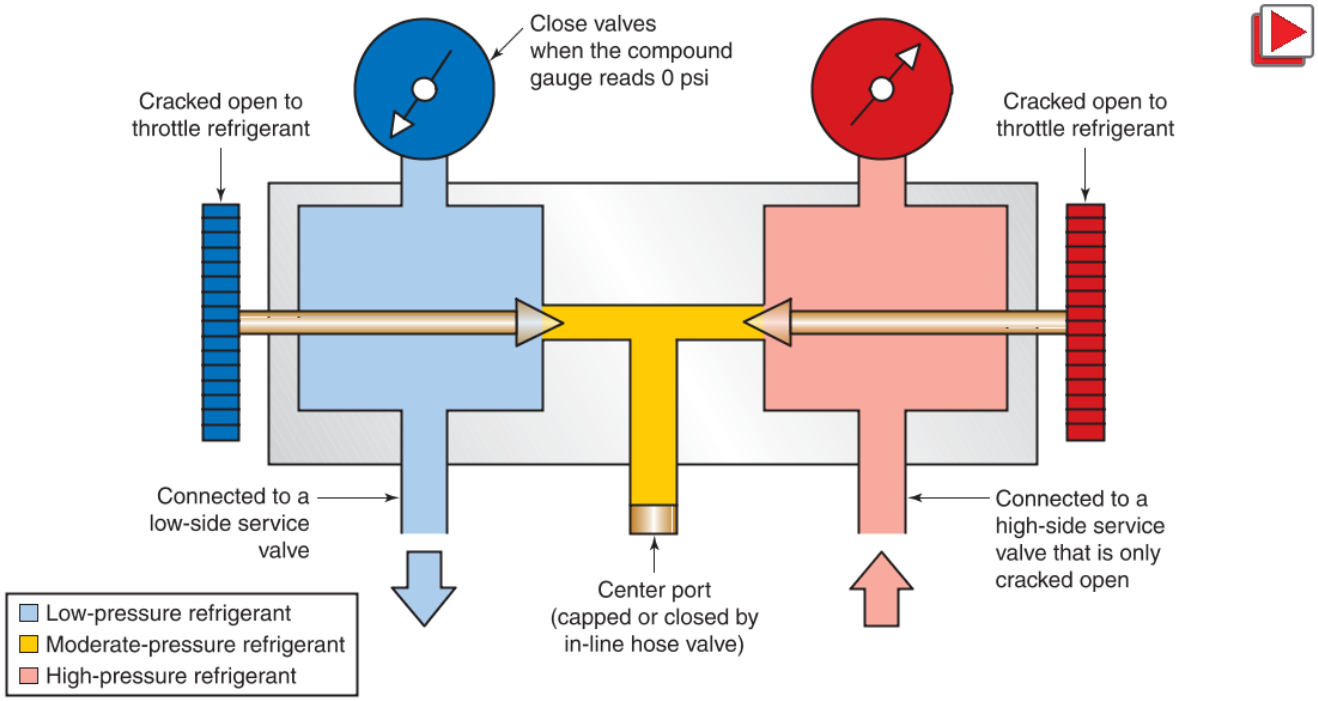

Goodheart-Willcox Publisher

Figure 55-2. Atmospheric balancing is done through the gauge manifold and minimizes contamination of a system's refrigerant circuit. This diagram shows how a pumped down system bypasses refrigerant vapor from the high side into the low side.

Copyright Goodheart-Willcox Co., Inc.

For any procedure dealing with pressurized fluids, wear goggles and always leave a gauge manifold connected to the system until the system is opened. The pressure in the system must be known.

When performing service on isolated sections of a refrigerant circuit that uses an open-drive compressor, the compressor can be used to pump down or recover the charge. How this is done depends on the system and the service valves available. See **Figure 55-3** for a typical arrangement. Purge hoses as previously described.

The compound gauge is used to measure suction to indicate the refrigerant charge remaining in the system. The high-pressure gauge is connected to a liquid line service valve. It measures head pressure. Connecting to the liquid line allows the compressor to pump subcooled liquid refrigerant into the recovery cylinder. This is highly preferable to connecting at the discharge service valve at the compressor outlet.

Refrigerant exiting the compressor is both in vapor form and superheated. This would be high-pressure and high-temperature vapor. Recovering from the liquid line takes advantage of refrigerant being in liquid form, which will save time. Also, the refrigerant is already subcooled, having gone through the condenser. It is still recommended to partially submerge the recovery cylinder into an ice bath. This helps to keep cylinder pressure and temperature in check during the recovery process, **Figure 55-4**.

Review the system wiring diagram. There may be different safety controls that need to be ***jumpered*** to prevent them from cycling off the system. This simply involves connecting a jumper wire in parallel with a device. Usually this is just across a control's two terminals. Controls to jumper may include low and high pressure switches, temperature switches, and other devices. Be sure to monitor pressure and other variables in case a problem develops with these safety devices jumpered.

With hoses purged and all connections tightened, cycle on the compressor. Monitor pressure levels. With the recovery cylinder partially submerged in an ice

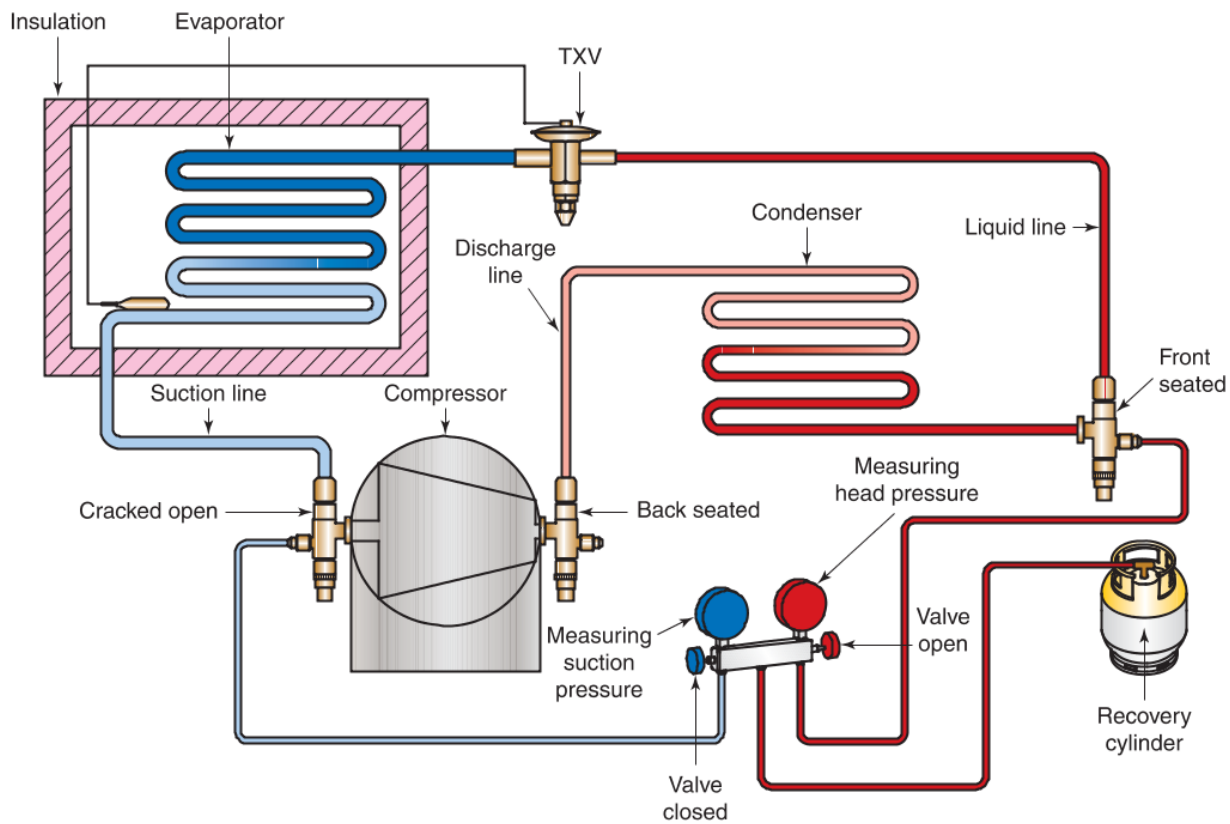

Goodheart-Willcox Publisher

Figure 55-3. The compressor is recovering the refrigerant and storing it in a recovery cylinder. The low-side manifold valve is closed, and the high-side valve is open. The suction service valve is cracked open off the back seat to monitor suction pressure. The discharge service valve is back seated. A service valve along the liquid line is front seated to block the flow of refrigerant and direct it through the gauge manifold and into the recovery cylinder.

Copyright Goodheart-Willcox Co., Inc.

Ritchie Engineering Co., Inc. – YELLOW JACKET Products Division

Figure 55-4. Submerging a recovery cylinder in an ice bath will help to protect the cylinder from the high pressures and temperatures that develop during recovery.

bath, head pressure should not rise to dangerous levels. Be familiar with normal operation head pressure levels and compare to measurements. As the recovery process continues, suction pressure should drop gradually as the refrigerant circuit is emptied.

After a constant low suction pressure has been maintained for at least two minutes, cycle off the compressor. Listen closely to compressor operation for a chugging sound, which indicates oil pumping. Never allow the compressor to pump oil. These hydraulic pressures could cause serious damage to the compressor and hoses. Cycle off the compressor if such noises are heard.

Close relevant valves to isolate sections of the refrigerant circuit. The more isolation the better, in case of accidental infiltration or other incident. Before opening any part of the refrigerant circuit for service, raise pressure in that section to just above atmospheric pressure (0 psig). If a refrigerant circuit in vacuum is opened to atmosphere, noncondensables and contaminants would be drawn inside. To prevent this, perform atmospheric balancing by gently cracking open the low-side manifold valve until the compound gauge indicates 1 psig. Barely opening this valve for a short time bypasses just enough refrigerant vapor from the recovery cylinder into the system to balance the pressure throughout. The isolated section of the system may now be opened and serviced. After removal of any parts, immediately plug the refrigerant openings.

Pro Tip

Compensating for High Head Pressure during Recovery

Excessive head pressures may be reduced by cooling the recovery cylinder, such as immersing the cylinder in an ice water bath, **Figure 55-4**. High head pressure may also be avoided by running the compressor intermittently. By operating the compressor for intervals interrupted by short rest periods, high head pressure can gradually drop through the corresponding high heat dissipating into ambient air or an ice bath.

Caution

Using Heat to Reduce Recovery Time

To quicken the recovery, cautiously apply heat to parts of the system under suction. This is any point past the service valve isolating the high side from the low side. Apply heat using a heat lamp or warm water. Applying heat to a refrigeration system during refrigerant recovery should be done with extreme care and caution. Never use a torch, as it may melt the fuse plugs and brazed joints. Never allow any part or spot to become too warm to touch with the hand.

Refrigerant to be returned to a system after service may be stored temporarily. It may also be stored temporarily for distillation if facilities are available for such processes. A clean refrigerant cylinder should be used for storing a recovered refrigerant charge. Remember that the refrigerant will always have an oil content. Some large companies save all refrigerant, redistill it, and process it for further use. This is good practice from the standpoint of both economy and ecology.

Federal laws govern chemical substance disposal. Refrigerant disposal is strictly classified by the following regulations:

- The United States Resources Conservation and Recovery Act (RCRA).
- United States EPA regulations.
- United States Department of Transportation (DOT) regulations.

Large quantities of refrigerants must be stored in steel drums and moved to registered waste disposal sites. See Chapter 9, *Introduction to Refrigerants* for further details concerning refrigerants containing CFCs.

55.1.2 Reassembling Refrigeration Systems

After repairs have been made and the parts tested, a refrigeration system must be properly reassembled. Four fundamentals must be followed when installing parts of a refrigeration system:

Copyright Goodheart-Willcox Co., Inc.

- Clean and dry each part to be put into the system.
- Evacuate that part of the system that has been opened, using the proper equipment.
- Test for leaks.
- Reintroduce refrigerant to evacuated sections.
- Return all valves and controls to normal settings.
- Start and adjust the unit.

It is difficult to assemble a refrigeration system in the field without foreign materials entering a system. It is almost impossible to keep dirt and moisture out of a system. Filter-driers should be installed to remove any matter that does enter the refrigerant circuit. These devices are installed in both the liquid line and suction line of a system.

A service call should be made within the next day or two after repair. The operating pressures and the general condition of the refrigeration system should be checked. If at all possible, connect temperature and pressure recorders into the system for 24 hours.

55.2 Servicing Motors and Compressors

Since electric motors provide the torque necessary for many compressors in the HVACR industry, it is natural that motor and compressor service go hand in hand. Aspects of motor and compressor service are electrical and mechanical. When field repair is not feasible, replacement is necessary.

Removing Open-Drive Compressors

To remove an open-drive compressor, follow this procedure:

1. Install a gauge manifold on the compressor service valves using hoses with quick-connect fittings to minimize refrigerant losses. The middle port of the manifold is used for recovery, evacuation, or charging.
2. Carefully test for leaks.
3. Turn the suction service valve all the way in, closing off the suction line.
4. Start the compressor. Let it run for only a few seconds, in order to prevent oil pumping. Oil in the crankcase may bubble vigorously as the refrigerant boils out. Pumping of oil should be avoided. It is indicated by a pounding noise in the compressor.
5. After starting and stopping the unit two or three times, it may finally be run continuously. Run the unit for a few minutes after a constant vacuum is reached on the compound gauge before stopping the compressor.
6. Crack open the high-side manifold valve. Then gently crack open the low-side manifold valve while watching the compound gauge. When it measures just above 0 psig, close the low-side and then the high-side manifold valves. This step allows the crankcase to reach equilibrium with atmospheric pressure before opening.
7. Turn the discharge service valve stem all the way in to close off the compressor from the discharge line.
8. Shut off and lock out the electric power.
9. Close the manifold valves.
10. Clean the joints to be opened with a grease solvent. Dry the joints before opening.
11. Unbolt the suction and discharge service valves from the compressor, **Figure 55-5** *Do not remove the suction and discharge lines from the service valves*. Immediately plug all openings through which refrigerant could flow using dry rubber stoppers or tape.
12. Disconnect the bolts that hold the compressor to its base and remove its belt or unhook the drive coupling.
13. Disconnect any other connections to the compressor, such as pressure transducers, oil return lines, and other devices. If necessary, valve off or isolate these devices before disconnection. The compressor is ready now for removal.
14. Drain the oil immediately and plug compressor refrigerant openings. Blank flanges work best for plugging openings. Do not reuse old oil if it is discolored.

Removing a compressor from a large unit presents a problem, because of the compressor weight. When lifting a compressor, avoid strain caused by assuming an awkward position. Use care not to slip on oil or loose tools. Carts and small hydraulic hoists are available for moving a heavy compressor. When replacing compressors, always install an exact or compatible replacement.

Thinking Green

Motor Efficiency

When a motor fails and a direct replacement is not available, a larger motor is often substituted. Motors are most efficient when they operate at 75% to 110% of their rated load. If a motor has been upsized and frequently operates at less than 50% of its rated load, it should be replaced with the proper size motor.

Copyright Goodheart-Willcox Co., Inc.

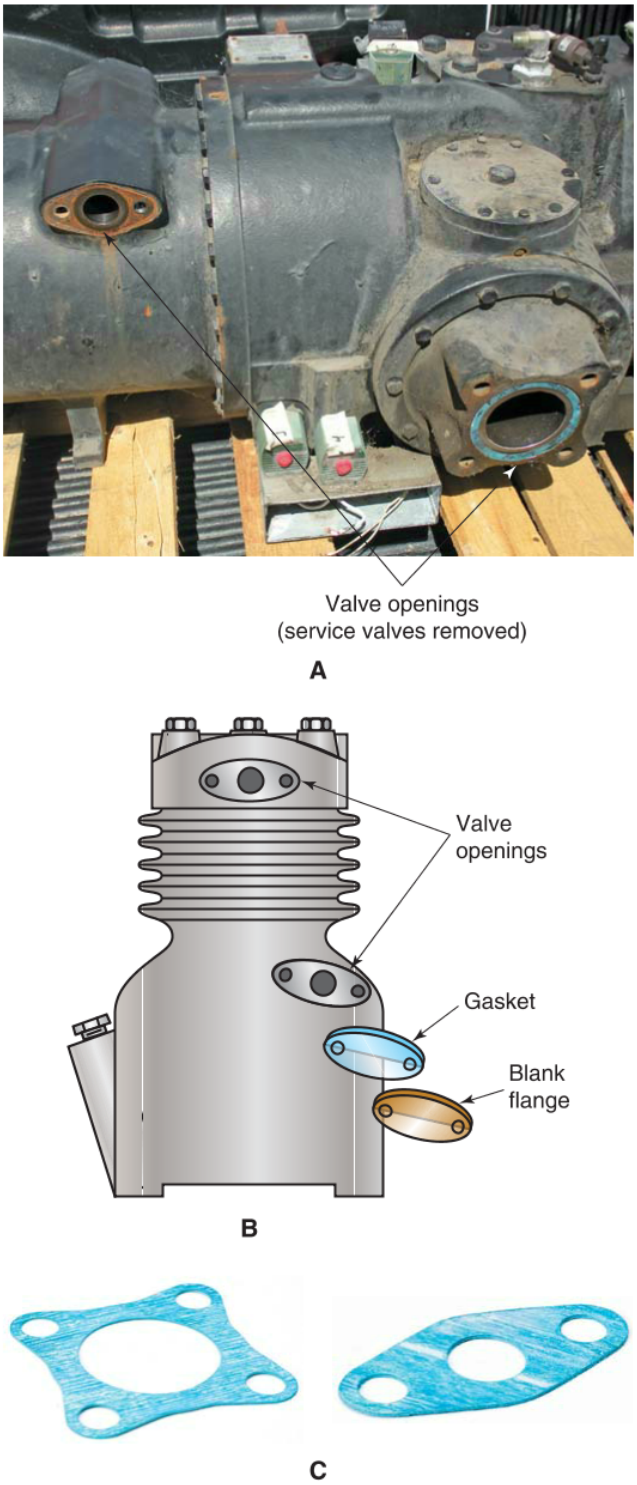

Bitzer; Goodheart-Willcox Publisher; Mueller Industries, Inc.

Figure 55-5. A—Compressor with service valves removed. B—Blank flange used to close compressor valve opening while compressor is being moved. C—Service valve gaskets.

To keep the crankshaft seal from being abused, never rest the compressor weight on the flywheel. Always place the compressor on a block so that the flywheel hangs free. If possible, remove the flywheel before removing the compressor. Any undue strain on the flywheel may damage the crankshaft and the crankshaft seal. The flywheel can be removed with a universal flywheel puller. A little heat to the flywheel hub helps while the wheel puller is drawn snug.

Crankshaft seals may leak if a compressor has been idle for a long time. Turn the compressor over by hand a few times. This allows oil to seep between the rubbing metal surfaces. Also, put an ounce of special refrigerant detergent oils into the crankcase. This will help eliminate this problem.

55.2.1 Servicing External Motors

Motors used on open-drive compressors in commercial systems vary in size. They may be anywhere from 1/12 hp (62 W) for fans to 15 hp (11 kW) for compressors. Air-conditioning systems require motors of 1/3 hp (48 W) to 25 hp (18 kW). These motors are connected to 120 V/240 V single-phase, 240 V three-phase, or 480 V three-phase lines.

In addition to compressor motors, commercial refrigeration systems use external motors for other purposes, such as for fans, water pumps, and mixers in ice cream machines.

Motor Lubrication

Adequate lubrication of a motor's bearings is necessary. Normally motors should be oiled twice each year. Use electric motor oil (SAE 30). Too much oil is as bad as too little oil. Most motors are equipped with overflow openings. These openings eliminate most of the effects of excess oil. Many lubricants are now available in aerosol cans. Larger motors may use grease for lubrication. Refer to manufacturer's literature for a specific motor's lubrication requirements.

Motor Cleanliness

Thoroughly clean a motor occasionally using a vacuum, brush, and damp cloth to remove dust, dirt, and grease accumulations. Most motors are air cooled. Vents should be kept clean to allow for proper airflow. Contacts and wires should be checked for cracking, pitting, or loose connections.

Removing Electric Motors

To remove an electric motor, check for a fuse or circuit breaker in the system. Disconnect and lock out the power circuit. Disconnect the power line and remove the wires from the motor terminals. Label the

Copyright Goodheart-Willcox Co., Inc.

terminals for easier assembly later. Loosen hold-down bolts that attach the motor to its base.

If a motor is part of a belt-driven unit, remove the belt from the flywheel first. Then remove the belt from the pulley. The motor can then be lifted out. Do not allow the fan to hit the condenser or catch on the belt. Use a puller to remove the pulley from the motor shaft after loosening the lock screw. An example of a belt-driven unit is an open-drive compressor or a large motor running a fan using a belt drive.

Fan motors are sometimes difficult to remove. It is best to loosen and remove the fan. Generally, the fan hub is locked in place on the motor shaft with an Allen setscrew. Check pulleys for signs of wear. Worn pulleys may be the root of the problem and can ruin replacement belts, requiring callbacks. The belts used in driving fans should be checked regularly for cracks, worn spots, and warping. Always replace a belt with the same groove configuration if signs of wear are shown, **Figure 55-6**.

55.2.2 Servicing Hermetic Motor Burnouts

A *burnout* is a condition in which the insulation of an electric motor deteriorates due to overheating. This may occur in any motor but is of particular interest in bolted assembly (semi-hermetic) and welded (hermetic) compressors. The warmest spot in a hermetic compressor is usually the motor windings due to high current draw. High current draw is often a result of high head pressure in the system. The high-pressure cut-out or high-temperature overload may be cycling off such a compressor. A restricted condenser, a large heat load on the evaporator, or a high-side restriction may all result in a high-pressure cut-out and motor overheating. In time, the condition could lead to a burnout and a motor winding short. The breakdown of motor windings causes contamination or burning of the refrigerant oil. Such oil becomes acidic. This can also make the refrigerant toxic and change its condition. See Chapter 26, *Service and Repair of Domestic Refrigerators and Freezers* for earlier coverage of burnouts.

Goodheart-Willcox Publisher

Figure 55-6. A belt used to transfer the motion produced by an external motor must be in good condition for proper system operation.

To prevent acid formation, a refrigeration system must be kept free of moisture and contaminants. Condensers should be regularly cleaned and checked for obstruction-free airways to prevent high head pressure. To detect acid formation, check the system regularly:

- Use a sight glass with moisture indicator to monitor moisture levels.
- Take an oil sample often, and test it with an oil test kit. The oil sample must be kept sealed until tested, **Figure 55-7**.

If a burnout occurs, a hermetic compressor must be replaced. In large systems equipped with shutoff valves, it may be possible to save the refrigerant. If possible, filter or recycle such refrigerant before storing in a recovery cylinder.

Safety Note

Burnout Cleanup Safety

When working with a burned out hermetic compressor, wear goggles and rubber gloves. Work in ventilated space. The oil may be acidic and cause serious burns. Do not get any on your skin. The fumes may also be irritating and toxic.

While a burned out hermetic compressor needs to be replaced, the rest of the refrigeration system can be reconditioned by flushing it with nitrogen. Use a refrigerant recovery machine to triple evacuate to 500 microns to ensure that all contamination and moisture have been removed from the system. Install a ***burnout filter-drier*** in the suction line and another in the liquid line, **Figure 55-8**. Burnout filter-driers are designed for use after burnouts. Note that they should be removed later after cleanup. Test for leaks and evacuate again. Charge the system.

Connect the electrical wires. Never solder leads to compressor terminals. The glass may crack or the terminal may come loose, causing a leak.

Start the system and check operation. Operate the system for a half hour and sample the oil using an oil

Copyright Goodheart-Willcox Co., Inc.

Refrigeration Technologies

Figure 55-7. Kit for testing refrigerant oil acidity.

Emerson Climate Technologies

Figure 55-8. Special filters are installed in suction lines to protect compressors after a burnout.

test kit. Replace the filter-drier if the oil sample is discolored or shows an acid trace.

Burnout filter-driers should always be used after a hermetic compressor has a motor burnout. Contaminants in a system may cause serious damage. Small solid particles act as an abrasive. They will wear down the needles and seats of refrigerant controls, valves, and also the valve seats, bearings, and pistons of compressors. These particles may also wear through a hermetic compressor's motor insulation and could cause another burnout. After cleanup, remove the burnout filter-driers from the system.

Removing Hermetic Compressors

If the motor is definitely faulty in a hermetic compressor, the compressor must be removed and replaced. Perform the steps of the removal procedure as follows:

1. Open the main circuit switch and lock out the power in the open position. Tag the switch to inform others why the switch is locked open.
2. Recover the refrigerant charge, as described previously. Close any valves to isolate the compressor as much as possible.
3. Disconnect the wires from the compressor. Label these or use a color code to prevent later confusion.
4. Clean the outside of the compressor.
5. Disconnect the compressor refrigerant lines. The type of disconnect depends on the compressor housing assembly. If removable, unbolt the service valves from the compressor housing. If the suction and discharge service valves are brazed fittings, open the brazed joints by heating or cutting the lines. Always wear goggles.
6. Plug the refrigerant openings.
7. Disconnect any other connections to the compressor as necessary.
8. Remove the compressor. Be careful not to tilt it, else oil could spill out. Avoid lifting if it is heavy by using a lifting machine (tripod or fork lift).

55.2.3 Adding Oil to a Refrigeration System

Remember when adding refrigerant to a refrigeration system that some of the oil will be dissolved in the refrigerant. If a unit becomes noisy (grinding or banging sound) soon after the refrigerant is added,

Copyright Goodheart-Willcox Co., Inc.

refrigerant oil should be added. A compressor that runs too warm or is noisy may lack oil.

Caution

Moisture-Free Lubricant

Remember that refrigerant oil and all the oil transfer equipment must be clean and dry. When adding oil to a system, always use oil from an unopened container. Even if an oil container was only temporarily opened and then covered again with a cap, the oil will have drawn in some moisture. Adding this oil to a refrigeration system will create problems later on.

Refrigerant oil must meet several requirements. The oil must be the proper viscosity for the compressor. It must be compatible with the refrigerant in the system. The oil must be designed to work properly in the low-side temperature range. If several available oils meet this requirement, select the one with the lowest wax content. At low temperatures, wax can precipitate out of the refrigerant and clog orifices. A low wax content is preferable over a high wax content.

There are several ways to add refrigerant oil to a refrigeration system.

- The most rapid method of adding oil uses the system's compressor. Attach tubing equipped with a hand valve to the middle opening of the gauge manifold. Evacuate the tubing. Then immerse it in a clean, dry container of refrigerant oil. Run the compressor. Draw a vacuum on the crankcase by turning the suction service valve all the way in. Oil will be drawn into the crankcase. It is important that some of the oil in the glass container be left there. This is so the filling tube is always immersed in the oil. Otherwise, air will be drawn into the system. Glass containers are used in order to observe how much oil has been added. Oil should always be metered into a system slowly (a couple of ounces at a time). The system should be run for a couple of minutes and observed for noises, which could indicate that more oil is needed. When the proper amount of oil has been added, shut the hand valve, open the suction service valve, and observe compressor operation. This method can also be done with small containers, **Figure 55-9**.
- Another method of adding oil to a system is to evacuate the crankcase, equalize pressure to 0 psig, remove the oil fill plug from the crankcase housing, and directly add the oil. Replace the oil fill plug and then evacuate the compressor. Be sure to differentiate properly between the oil fill plug and oil drain plug.

Ritchie Engineering Co., Inc. – YELLOW JACKET Products Division

Figure 55-9. These calibrated vessels allow a specific amount of oil to be added to a refrigeration system at a time.

- Oil can also be forced into a system by putting the oil into a service cylinder first. Draw oil into the service cylinder by first evacuating the cylinder. With the oil in the cylinder, build up a pressure in the cylinder with refrigerant vapor through the gauge manifold. The cylinder's lower valve is then connected to the center port of the gauge manifold. Open the low-side manifold valve and service cylinder valve. The oil is drawn from the cylinder into the compressor.
- Special pumps are available to manually pump oil into a compressor. Some of these pumps can even add oil into a system pushing against high-side pressure, **Figure 55-10**.

Some compressor oil circulates around the system with the refrigerant. Therefore, oil must be added to the compressor if refrigerant lines are over 30′ (9.14 m) long. This includes both suction and liquid lines. Add about 3 fl. oz. (0.088 L) of oil for each 10′ (3.05 m) of tubing installed.

A suction line filter-drier must be installed if oil is added to a system. The oil additives may react and make sludge. Refrigerants can be successfully dried with a drier in either the liquid or suction line.

Copyright Goodheart-Willcox Co., Inc.

Ritchie Engineering Co., Inc. – YELLOW JACKET Products Division

Figure 55-10. This pump allows a technician to add oil while the compressor is operating.

Caution

Oil Overcharge

Exercise extreme care when adding oil to a refrigeration system. If an HVACR system has too much oil, the compressor could be damaged by pumping liquid oil.

55.3 Servicing Condensers

Condenser service procedures depend on the type of condenser. In all cases, heat transfer surfaces must be clean. This is true for surfaces in contact with the refrigerant and for surfaces in contact with the cooling air or water. Jets of air may be used as a blowing agent. They are used to clean the condenser or drain lines, **Figure 55-11**.

If there is air in the refrigerant circuit, use a recovery machine to recover the refrigerant charge and evacuate the condenser while the compressor is stopped. Take precautions against freezing when working on water coolers and water chillers.

Remember that the purpose of a condenser is to remove heat. A condenser will fail to do its job efficiently if the heat transfer surfaces are covered with an insulating film of dirt or grime. The heat removing medium (air or water) must also be at correct temperature and volume.

DiversiTech Corporation

Figure 55-11. This pressurized air gun blows condensate drain lines clean.

55.3.1 Servicing Air-Cooled Condensers

Over time, the fins and tubes of air-cooled condensers accumulate a film of dirt and grime. This inhibits heat transfer, reduces system efficiency, increases head pressure, and can lead to various other problems. Regular cleanings are essential for optimal performance, **Figure 55-12**.

Goodway Technologies Corp.

Figure 55-12. A pressurized cleaning solution is sprayed over condenser coils to remove accumulated grime.

Copyright Goodheart-Willcox Co., Inc.

Code Alert

Condenser Cleaning Permits

Check local and state codes to see which permits (if any) are needed to wash out condenser coils.

Removing Air-Cooled Condensers

A condenser may need replacing due to leaks or other problems. If so, it must be removed from the installation. Before removal, liquid refrigerant must be recovered from the condenser or pumped down into the liquid receiver. Also, the pressure must be balanced or equalized by adjusting to atmospheric level.

After pumping down the system into the liquid receiver, close the valve between the condenser and the liquid receiver. Then equalize the condenser to atmospheric pressure. Always wear goggles when working with pressurized vessels. Residual oil in the condenser should be drained and measured upon removal.

If there is no shutoff valve between the condenser and the liquid receiver, refrigerant should be removed by using a recovery machine. The amount of oil removed should be measured and noted for replacement into the system when the condenser has been repaired or replaced.

To remove a condenser, first clean the condenser as well as possible. Brushes, vacuum cleaner, air jets, carbon dioxide, and nitrogen jets may be used.

Most air-cooled condensers are housed in a protective shroud. This shroud also serves as an air duct. On some of the larger units, these sheet metal parts are heavy. Handle with care. Gloves and safety shoes are recommended. Most air-cooled condenser housings have an access door, which needs to be removed to service the condenser fan. **Figure 55-13** shows a condenser fan with the access door removed. Be sure to save removed fasteners in a container for easy organization.

Fans, fan brackets, belts, and motors may need to be removed on some units. These parts should be labeled, cleaned, and stored for reuse. Be sure the fan blades are not nicked or bent. This may put them out of balance and decrease their efficiency or cause disturbing noises. If electrical connections are removed, label them. Use masking tape and a marker or wire tags, **Figure 55-14**.

Always clean tubing connections before disconnecting the condenser from the rest of the system. Immediately plug the refrigerant openings. This keeps the internal refrigerant passages clean and prevents oil spills when moving the condenser.

Exercise care to avoid damaging condenser fins. Wood or cardboard protectors taped over the corners of the fins will provide protection. Because fins can be sharp, always use gloves when lifting or carrying a condenser.

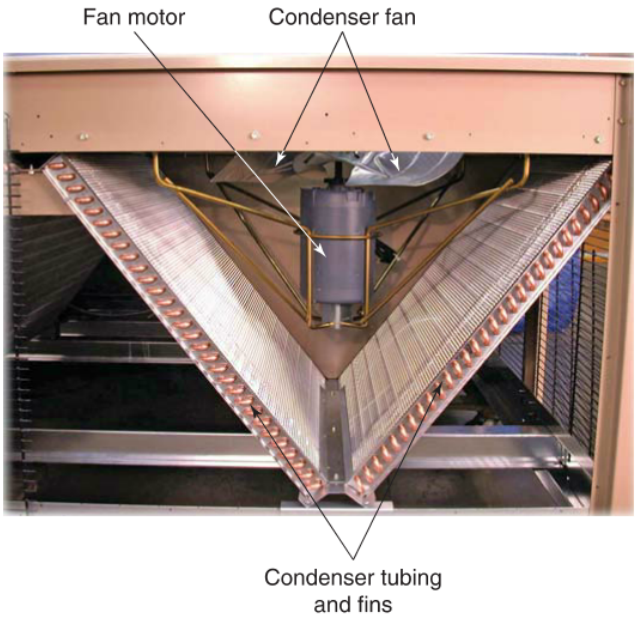

York International Corp.

Figure 55-13. Air-cooled condenser fan assembly. Note that the access door has been removed.

Ideal Industries, Inc.

Figure 55-14. Adhesive wire markers for easy labeling.

Repairing Air-Cooled Condensers

A leak in a commercial condenser can often be repaired. First, clean the condenser. Then remove refrigerant from the condenser in the most convenient manner available. Flush the inside of the refrigerant tubes with nitrogen. If a brazed joint is leaking, clean the outside of the joint. With the charge removed from

Copyright Goodheart-Willcox Co., Inc.

the condenser, set up low-pressure flowing nitrogen through the condenser. Apply flux to the joint, heat it, and take it apart. Clean the brazed area to get a smooth surface. Apply flux to the male part of the joint. Then assemble and support the joint. Braze the joint according to best practices and using the proper brazing filler material. Remove excess flux from the outside of joint.

If a tube is cracked, remove the damaged part and replace with new tubing section. Braze the new part in place. Inspect fittings (and flares, if used). These connections must be in good condition. Bent fins may be straightened using a ***fin comb***, **Figure 55-15**.

To test a repaired condenser, connect a pressure gauge to the condenser and plug one end of the condenser. Connect a nitrogen cylinder to the other end. Build up a pressure in the condenser, observe the pressure gauge for any measured drop, and test for leaks using soap bubbles. If nitrogen is unavailable, build up pressure in a condenser using system refrigerant. Use an electronic leak detector that can sense the type of refrigerant in the system. If refrigerant is used for leak detection, it must be recovered after the test is complete.

Another method used in some repair shops is the "dunk test." The condenser ends are sealed with brazed caps and a service valve is added. The condenser is pressurized with nitrogen, and the condenser is submerged in a tub of water. Bubbles reveal the location of any leaks.

A condenser leak is usually located using one of the following detection methods:

Ritchie Engineering Co., Inc. – YELLOW JACKET Products Division

Figure 55-15. Fin combs used to straighten condenser and evaporator fins.

- Bubble test.
- Electronic leak detector.
- Water immersion test.

55.3.2 Servicing Water-Cooled Condensers

Water-cooled condensers may either have a problem with the cooling water flow in the water loop or a leak in the refrigerant piping. The most common problem is scale buildup or restrictions in the water loop. A technician should first check the pressure drop across the condenser and ensure that it is within the manufacturer's specification. Increased head pressure is often a sign that the water flow rate is too low or scale buildup in the water circuit is inhibiting heat transfer.

If the problem is in the refrigerant circuit, the entire water-cooled condenser may need to be replaced. It is important to shut down and lock out all electrical service to the system prior to opening the water circuit. Water on the floor and on the unit is conductive and may cause an electrical shock.

Cleaning Water-Cooled Condensers

The most common problem with water-cooled condensers is a lack of maintenance. Depending on its usage, a water-cooled condenser should be cleaned at least annually. Water-cooled condensers eventually build up scale and lime from minerals in the water. The amount of minerals in the water varies by geographic location and water source. Systems that use ground well water require water treatment, such as water softeners and additional filters to remove minerals. The accumulation of scale in the water tubes over time reduces heat transfer from the refrigerant to the water. This results in higher head pressures and a reduction in system efficiency.

After shutting down and locking out electrical power, close the water supply valve and drain any remaining water. Remove any strainers and filters. Flush and clean the valves, strainers, and replace any cartridge filters. Straight tube condensers often have access ports that may be opened to allow the insertion of brushes through each tube. Mechanical brushes or manual brushes are rotated inside each tube to remove any scaling. The tubes are then flushed to remove the debris. Coiled water-cooled condensers can also be cleaned by using cleaning agents and water jets, **Figure 55-16**.

Chemical cleaning of water-cooled condensers is usually performed by technicians trained and certified in this work. All EPA guidelines for use and removal of hazardous wastes must be followed. Many chemical treatments are caustic and require the use of rubber gloves, protective clothing, and eyewear.

Copyright Goodheart-Willcox Co., Inc.

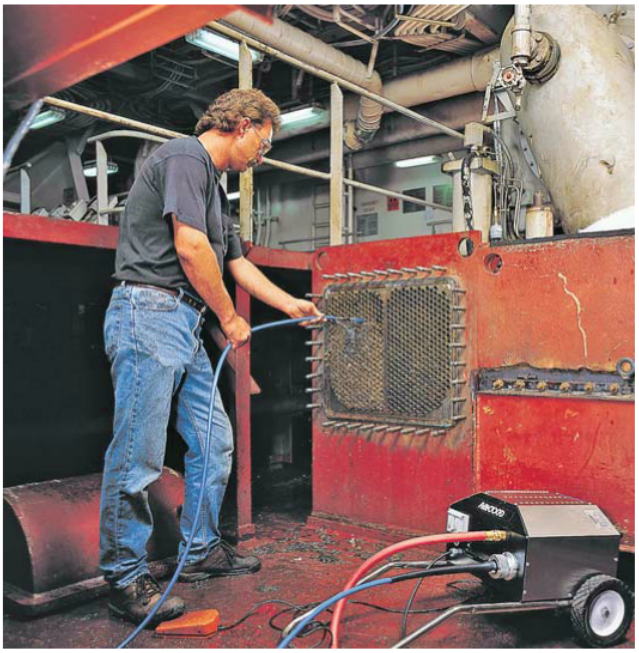

Goodway Technologies Corp.

Figure 55-16. This worker is cleaning a shell-and-tube condenser. The flexible shaft on the power cleaner rotates at high speed inside a nylon casing and high-pressure water helps the cleaning brush loosen deposits.

Removing Water-Cooled Condensers

A leaking water-cooled condenser should be removed and repaired or replaced. Removing a water-cooled condenser is similar to removing an air-cooled condenser. However, the water line must be disconnected. To do this, first close off the water supply. Then disconnect the water lines and drain all the water from the condenser to prevent any freezing of moisture within. Consider further flushing with low-pressure flowing nitrogen if this is available. Any remaining moisture could freeze, expand, and cause damage during recovery of refrigerant. Removal of any remaining moisture may be done by blowing out the coils with air, nitrogen, or carbon dioxide. Do not exceed a 60 psig (415 kPa) pressure, else the system may be damaged.

The water drain valves should be left open. This will allow drainage of residual water in the piping. Be sure the drain plug of the circulating pump is removed and left loose. If a pressure-operated water valve is used, leave it installed in the system, if possible. This is necessary because of its refrigerant tubing connection.

Once the water circuit is emptied of moisture, recover the refrigerant from the condenser and isolate the condenser from the rest of the refrigerant circuit. Survey the system for the most convenient valves to close.

Clean the outside of the condenser, wipe away the water, and clean the condenser connections. Dry the connections thoroughly. If the connections are mechanical, use wrenches of proper size. After disconnecting the refrigerant circuit, promptly cover the openings using good plugs to prevent water entering the system during cleaning. Either synthetic rubber expanding plugs or flared plugs are recommended.

If the condenser is heavy, use a lifting device. When a lifting device is not available, have two or more individuals work together to move the condenser.

Repairing Water-Cooled Condensers and Liquid Receivers

When a water-cooled condenser or liquid receiver malfunctions, replacing the unit is usually cheaper than repairing it. Welding or brazing is sometimes used to repair leaks, but this work should only be done by a pressure vessel certified welder. Depending on the cost, a condenser may be sent out for remanufacturing or repair. After being repaired, the vessel must be tested and certified prior to reuse.

Liquid receivers in most commercial systems serve as refrigerant storage cylinders. They usually have a welded steel shell. A shell-and-coil condenser often functions as both a condenser and a liquid receiver.

The water coil built into shell-and-coil condenser-receivers may develop a leak. Under certain conditions there is a corrosive action of the water and refrigerant. Eventually, the copper tubing used to carry the water may corrode. The leaking tube lets refrigerant from the system into the cooling water. This type of leak may be found by using an electronic refrigerant leak detector to check for the presence of refrigerant at the water drain. Leaks sometimes occur at the joints where the water-cooling coil attaches to the liquid receiver. Such damage may be due to abuse or to corrosive action. In either case, the condenser should be replaced with a new one.

Large liquid receivers are equipped with safety release valves. Liquid receiver repair should be attempted only with permission of local inspectors.

Servicing Water Valves

Water-cooled condensers rely on the proper operation of a water valve for proper heat transfer, **Figure 55-17**. Such systems often require attention because of incorrect water flow. This trouble is sometimes due to the water valve or to the screens in the water circuit. See Chapter 33, *Commercial Air-Conditioning Systems* for additional details on water valves.

A water valve is supposed to provide water to a condenser only while the system is cycled on with the

Copyright Goodheart-Willcox Co., Inc.

Danfoss

Figure 55-17. Water valves are available in different sizes and styles.

compressor running. A water valve should stop water flow when the compressor cycles off. The following are some common problems with water valves:

- Inadequate water flow.
- Excessive water flow.
- Constant water flow (that does not stop when the unit is cycled off).

Inadequate water flow will not remove as much heat as it should. This can cause head pressure to rise. High head pressure can cause several cascading problems.

Excessive water flow can be wasteful and expensive for the system owner. It may be the result of an improperly sized water valve that allows too much flow. A properly sized valve may be calibrated for too much flow. Always check the pressure drop across the water-cooled condenser to make sure that the water flow rate matches the manufacturer's recommendation.

Constant water flow is also wasteful and expensive; however, it can also obscure the presence of other problems, such as noncondensables trapped in the condenser. Constant water flow can also negate the effectiveness of a hot-gas defrost function, increasing the time and decreasing system efficiency. A water valve will only operate correctly if installation is correctly made. Supply water must be clean.

Removing Water Valves

Before disconnecting a water valve from the water circuit, shut off the water supply. This is done using a hand valve. If no replacement valve is immediately available, temporarily connect the water system without a replacement. If necessary, water flow can be regulated temporarily with a hand shutoff valve.

To remove an electrical solenoid water valve from a system, open the switch that controls the circuit to the motor. Remove the water valve wires from the motor circuit. If these wires are soldered and taped, they must be unsoldered or cut. Most use slip-on connections, as this is quick and convenient.

Some pressure-operated water valves are difficult to remove from a system because the valve is connected to the high side of the condensing unit. The pressure tube for these valves may be connected into the compressor cylinder head or the compressor discharge tubing. However, some manufacturers connect this tube into the liquid line. Sometimes this tube has a hand shutoff valve. If so, removal of the valve is simple.

Removing a Pressure-Operated Water Valve

If a pressure-operated water valve is connected to the cylinder head of a compressor, follow the steps of this procedure. Since this involves dealing with pressurized fluids, be sure to wear goggles for eye protection.

1. Install a gauge manifold across the suction service valve and discharge service valve.
2. Turn the suction service valve all the way in.
3. Run the compressor until the pressure in the crankcase reaches 0 psi. Listen for a chugging sound that would indicate oil pumping, which sometimes occurs before 0 psi is reached. Immediately turn off the compressor if oil pumping occurs.
4. Heat the water valve line and the water valve bellows carefully with a heat lamp. Do this for three or four minutes until both are quite warm to the touch. This operation will move the liquid refrigerant that has condensed in this tube and valve back into the condensing unit. Then, only a small amount of high-pressure vapor will be left in this tube.
5. Turn the discharge service valve all the way in to block off the discharge line.
6. Open both low-side and high-side manifold valves. This bypasses the high pressure in the manifold and water valve refrigerant line into the low side.

Copyright Goodheart-Willcox Co., Inc.

7. Clean the joints to be opened.
8. Disconnect the pressure tube from the water valve.
9. Immediately plug the refrigerant pressure tubing openings.
10. Gently heat the water valve again. Often, some liquid refrigerant becomes oil-bound within the water valve's bellows chamber. It releases with explosive force a few minutes after the valve is opened to the atmosphere. Heating will drive it out.

Safety Note

High-Pressure Oil

Be very careful not to point the refrigerant openings toward anyone. There is danger of being hit by the refrigerant. It is best to wrap the refrigerant openings with several layers of heavy toweling. The toweling will absorb any refrigerant being thrown from the mechanism.

11. Shut off the water supply.
12. Disconnect the water valve from the water line. Replace it with a new valve or connect the water lines directly. Now the old water valve is ready to be dismantled and repaired.

Some water valves permit removing the valve body without disturbing the refrigerant connections. To disconnect one of these valves, shut off the water. Disconnect the valve body from the water lines and bellows body.

Thermostatic water valves or motorized water valves are easily removed. Only electrical connections need to be broken and the water circuit closed.

Repairing Water Valves

It is usually better to replace a worn water valve than to repair it. Sometimes, however, a water valve only needs cleaning. A muriatic acid solution and wire brushes work best. Use the same precautions as when cleaning the water tubes of a condenser. If a valve has rubber or plastic seals, it should be replaced.

Occasionally, a packing gland is used to seal the joint. This is done where the valve stem passes into the valve body proper. The packing is usually composed of graphite, lead, and other materials. If the packing nut is turned all the way down and this joint still leaks, replace the packing.

Electric water valves may have faulty electrical coils (either shorted or with an open circuit). Replace the coil using one with the same electrical properties (voltage and wattage). Thermostatic water valves may lose the element charge. If so, replace the valve.

Installing and Adjusting Water Valves

After cleaning and repairing a pressure-operated water valve, test and adjust it. Only after testing and adjusting a water valve should a system be returned to service. If the maximum water supply temperature is 75°F (24°C), adjust the valve to open at the pressures shown in **Figure 55-18**. If the water inlet temperature is not 75°F, adjust valve to its correct opening pressure. Refer to **Figure 55-19**.

A pressure-operated water valve should also be tested for leaks while it is being adjusted using a portable air cylinder. To do this, connect an air pressure line to the valve's water inlet. The pressure-operating bellows controls the water flow. To test it, connect another air line and a pressure gauge to this fitting. No air should flow through the water valve until correct control bellows pressure is reached. Adjustment may be made to obtain this condition.

After installing a water valve, check it for leaks (both water and refrigerant), outlet water temperature, water flow, and head pressure.

55.3.3 Servicing Cooling Towers

Evaporative condensers and cooling towers collect deposits from the cooling water. These deposits must be removed periodically, else they will act as insulation. Deposits may be reduced by using water softening chemicals. Such chemicals can be bought from wholesale supply companies.

Chemicals in water are measured by a pH factor. The scale of pH is from 1 to 14. A solution that is acidic is indicated at 1 pH through 7 pH. A solution that is alkaline (base) is indicated at 8 pH through 14 pH. Chemicals may be added to the water to create a pH of 7 or 8 in the water.

The water temperature is important when testing for pH (acidity or alkalinity). The warmer the water, the more active the reaction to probes or color testers.

Water Valve Opening Pressures

Refrigerant	Pressure	
R-22	144 psig	1097 kPa
R-134a	92 psig	735 kPa
R-404A	182 psig	1355 kPa
R-717	152 psig	1152 kPa

Values based on water temperature of 75°F (24°C).

Goodheart-Willcox Publisher

Figure 55-18. Water valve opening pressures for water supply temperature of 75°F (24°C).

Copyright Goodheart-Willcox Co., Inc.

Water Valve Head Pressure Settings (psig)											
Refrigerants	50°F	55°F	60°F	65°F	70°F	75°F	80°F	85°F	90°F	95°F	100°F
R-22	95	104	113	123	133	144	155	158	180	194	208
R-134a	55	61	68	76	84	92	101	110	120	131	142
R-404A	120	131	143	155	168	182	196	212	228	245	263
R-717	98	108	119	130	140	152	164	177	191	205	220

Goodheart-Willcox Publisher

Figure 55-19. Table of head pressures for systems with various refrigerants at various inlet water temperatures.

It is best to test the water between 70°F (21°C) and 80°F (27°C). Water near boiling is about 15% more active. Very cold water (near freezing) will give readings about 5% below the true value.

Chemicals may be used to lessen algae, mold, and slime growth. Deposits can be removed by scraping or by using a weak acid solution. This should be followed by a soda solution rinse and wash.

In addition to scale deposits, cooling tower basins can fill with slime, mud, algae, and bacterial colonies. Such contaminants can foul up components and reduce efficiency. Remove these as quickly as possible, **Figure 55-20**. Also, air passageways should be washed to eliminate blockages and maximize airflow, **Figure 55-21**.

Cooling towers need regular maintenance. Once a year, repair corrosion spots. It is good practice to do the following monthly:

Goodway Technologies Corp.

Figure 55-20. Technician vacuuming contaminants out of a cooling tower.

Goodway Technologies Corp.

Figure 55-21. Technician pressure washing the air passageways of this cooling tower.

- Inspect fan and motor bearings and oil sleeve.
- Grease (with water inhibitor) fan coil ball bearing.
- Inspect belt tightness and alignment and adjust, if necessary.
- Clean the strainer.
- Clean and flush the water pump.
- Inspect water level and adjust float, if necessary.
- Inspect spray nozzles and clean, if necessary.
- Inspect water level bleed; it must be working.
- Inspect air inlet screens and clean, if necessary.
- Inspect water for algae, leaves, or other particles.

55.4 Servicing Liquid Lines

Refrigerant lines are typically made of copper tubing called air conditioning and refrigeration (ACR) tubing. ACR tubing is dehydrated and sealed with gaseous nitrogen by the manufacturer to keep the tubing dry and clean until it is used. Commercial refrigeration

Copyright Goodheart-Willcox Co., Inc.

systems mostly use hard-drawn ACR tubing, although soft ACR tubing is used in some applications as well.

Soft ACR tubing and hard-drawn ACR tubing are available in different wall thicknesses, primarily K and L. Soft ACR tubing comes in rolls of 25′, 50′, and 100′ while hard-drawn ACR tubing is sold in straight lengths of 10′ and 20′. Hard-drawn ACR tubing cannot be bent or shaped, so any changes in tubing direction must be accomplished using brazed fittings. See **Figure 55-22**.

To differentiate from plumbing and other types of piping in nominal sizes, ACR tubing size is designated by the actual outside diameter of the tubing. See Chapter 8, *Working with Tubing and Piping*, for additional information about copper tubing and tubing sizes.

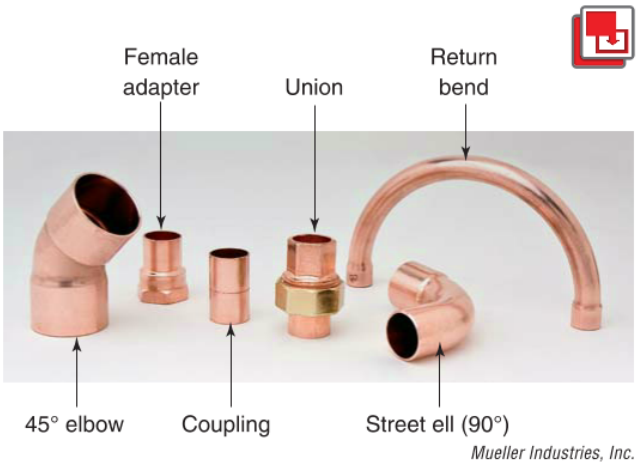

Mueller Industries, Inc.

Figure 55-22. Straight lengths of hard-drawn ACR tubing are connected with different types of fittings to achieve the desired tubing arrangement. All elbows and bends must be long radius.

Pro Tip

Tubing Sizes

While both the plumbing trade and the HVACR trade use copper tubing, the method of specifying tubing size is different between the trades. The plumbing trade specifies tubing size based on inside diameter, and the HVACR trade specifies tubing size based on outside diameter. This distinction prevents tubing intended for plumbing from being used in HVACR applications. Copper tubing intended for plumbing may have traces of processing oils that are incompatible with refrigerant oils.

Code Alert

Refrigerant Line Support

The manner in which refrigerant lines must be secured is specified by local building codes. The codes specify the materials that can be used, the support intervals required, and any shielding that is required around concealed tubing or tubing penetrating walls, floors, and ceilings of a building.

When servicing liquid lines, inspect the condition of the entire length of a liquid line. It must be protected from abrasion and abuse as objects are moved. The tubing should be well supported along its full length. While inspecting liquid lines, check the liquid line filter-drier, sight glass, and moisture indicator. Ensure that the sight glass and moisture indicator are installed between the filter-drier and refrigerant metering device. This is important for several reasons.

First, this arrangement allows the filter-drier to absorb moisture before it reaches the moisture indicator. If the filter-drier is full and cannot absorb any more moisture, the moisture indicator will show a rising level of moisture. A technician will know then to replace the filter-drier.

Another reason to install the sight glass between the filter-drier and refrigerant metering device is that this arrangement allows the sight glass to indicate possible unintentional pressure drops along the liquid line. For instance, if a liquid line filter-drier is clogged or restricted in some way, bubbles will appear in the sight glass. The system may have an adequate refrigerant charge, but the pressure drop caused by the restriction will cause bubbles to appear in the sight glass. Confirm the location of the pressure drop by performing a high-side temperature survey. This involves taking temperature measurements across the length of the liquid line and its in-line components. A temperature drop will confirm the source of the pressure drop and the location of the restriction.

Be mindful of the temperature of the liquid line. During system operation, a liquid line should be filled with warm liquid refrigerant. If a liquid line is not just warm but hot, it may contain refrigerant vapor. This could occur due to several different causes. In any case, it should be investigated.

Note that hot gas circulating through a liquid line could cause several different problems. For example, if driers are heated while in a refrigerant circuit, they will release moisture back into the circulating refrigerant. This could occur when refrigerant vapor is in the liquid line, due to a system undercharge or a dirty condenser or inoperable condenser fan. In any case, the hot-gas vapor circulating through the liquid line heats the drier, causing it to release moisture back into the refrigerant.

After addressing the cause of vapor in the liquid line, install a new filter-drier in the liquid line if the moisture indicator signals an unsafe or increasing amount of moisture in the refrigerant circuit.

If a liquid line has been evacuated or emptied of liquid refrigerant, take care when admitting liquid

Copyright Goodheart-Willcox Co., Inc.

refrigerant into a liquid line through the liquid receiver service valve. Always open the valve slowly. A sudden rush of liquid may damage the screen or pack the desiccant in a filter-drier so firmly that it will clog.

55.5 Servicing Evaporators

Like air-cooled condensers, air-cooling evaporators usually consist of finned tubing passageways through which refrigerant flows to exchange heat. While condensers expel heat, evaporators absorb heat. Condensers and evaporators need to be clean and free of obstructions inside and outside to have optimal heat transfer.

55.5.1 Removing Evaporators

When removing an evaporator, first install a gauge manifold and test for leaks. Before opening the system, pump down or recover the refrigerant charge. However, before pumping down the system or recovering the charge, identify any in-line components that may interfere with the process. These may include evaporator pressure regulators, solenoid valves, shut-off valves, hot-gas valves, or pressure or temperature safety devices. Ensure that any valves along the suction line remain open so the refrigerant removal process continues unhindered. Ensure that any hot-gas bypass valves remain closed to prevent wasting time and effort pumping more than necessary. Be sure that any of the solenoid valves for hot-gas bypass are closed.

To pump down the system, close the liquid receiver service valve (LRSV) and run the compressor. As the compressor runs, watch the compound gauge to see when atmospheric pressure (0 psig) or a constant vacuum has been produced. At this point, begin feeling the relative temperature of the liquid line and evaporator. Continue running the compressor until the evaporator and liquid line are warm.

Unusual noises heard from the compressor indicate that it is being starved of oil. If that occurs, immediately stop the process and recover the remaining refrigerant using an approved recovery machine.

To speed up the pump down operation, heat the evaporator carefully with a heat lamp or heat gun set on low. Never allow the evaporator to get more than warm to the touch. When the compound gauge has a low pressure measurement and the evaporator and liquid line are warm, all the liquid refrigerant has been removed.

Warming the evaporator and liquid line and obtaining a vacuum ensures that as much refrigerant as possible has been pumped down into the liquid receiver. Before opening the system, perform atmospheric balancing. To balance the pressure in the evaporator to atmospheric pressure, a technician may bypass a small amount of high-side vapor through the gauge manifold into the evaporator. Make sure the center port of the gauge manifold is covered or valved off with an in-line hose. Turn both the discharge service valve and the suction service valve so they are just cracked open off the back seated position. Observe the compound gauge as you crack open the high-side manifold valve and then the low-side valve. Vapor from the high side will flow into the low side. Close the manifold valves when the compound gauge reads atmospheric pressure. Front seat both service valves and remove the evaporator. Plug all refrigerant circuit openings.

Multiple-evaporator systems may have hand shut-off valves for each evaporator. If so, use these valves instead of the compressor service valves. Close the liquid line service valve first. Then pump refrigerant out of the evaporators. Be sure there is 0 psi or slightly more in the evaporator. Close the suction line hand valve, and the evaporator is ready for removal.

Shut off the electric power to the evaporator fan and liquid line solenoid valve, if these are present. Remove the casing or shroud of the evaporator carefully. If electric defrost elements are mounted in or on the evaporator, disconnect them.

Clean and dry the suction line where it is connected to the evaporator. Also clean the inlet connection. Then, unfasten the suction line and liquid line from the evaporator. Plug the openings with appropriate fittings.

55.5.2 Repairing Evaporators

Evaporator repairs are usually limited to the following tasks:

- Repairing leaks.
- Repairing or replacing fittings.
- Straightening fins.
- Replacing defrosting elements.
- Repairing or replacing hangers.
- Repairing or replacing fins or motors.

Where leaks occur, completely dismantle leaking component and clean the surfaces. If it is a brazing repair, follow the procedural steps explained in Chapter 8, *Working with Tubing and Piping*. Always anneal an old tube before flaring it. Fins can be straightened using a fin comb.

Electrical defrosting elements should be checked for continuity. Terminals, insulation, and isolating parts should be inspected also. Rusty or bent hangers and abused hanger assembly bolts should be replaced. Check for the following:

- Fan and motor vibration.
- Tightness of the fan on the motor shaft.

Copyright Goodheart-Willcox Co., Inc.

- Motor end play.
- Motor bearing wear.
- Condition of lubricant.

Small faulty motors should be replaced. Larger motors can be rebuilt. See Chapter 17, *Servicing Electric Motors and Controls*.

All parts should be cleaned before assembly. The evaporator is usually assembled on the job. If leaks have been repaired, the evaporator should be leak tested before it is installed.

55.5.3 Installing Evaporators

If the evaporator has been removed, the following reassembly procedure should be followed to ensure proper operation. Bolt the evaporator back into place and level it. Using a towel, wipe dry the surfaces of lines and evaporator before removing seals. Then remove the plugs on the refrigerant openings. Attach the refrigerant tubes to the unit. Be careful that no moisture enters the lines during these operations.

Install a thermostatic expansion valve (TXV). Connect a vacuum pump and evacuate all parts of the system that had been opened to atmosphere. These may include the evaporator, suction line, and compressor, if not isolated. Evacuate the evaporator a second time. Charge the evaporator and other parts in vacuum with a small amount of refrigerant to between 5 psig and 25 psig (35 kPa and 170 kPa). Test for leaks using an electronic leak detector. Complete the charge and test again for leaks.

When pulling a vacuum on an evaporator, heat it to a fairly high temperature as it is being evacuated to ensure that it is completely dehydrated. It should be heated to 175°F to 200°F (79°C to 93°C). This drives out any moisture that may be present. Heat lamps work well for this purpose.

After installing an evaporator and testing for leaks, install any defrost unit and its electrical connection, if used in this application. Install the fan and motor. The electrical connections should be tight and moisture-proof. Test the operation of the defrost unit and the fan. Assemble the casing or shroud. Start the unit and check for normal operation.

55.6 Servicing Valves

Valves function to control the flow of fluids through a system. Different types are used in different applications. While some simply open and close, others vary how much they open to provide modulating flow. Understanding a valve's purpose and operation is necessary for troubleshooting and servicing any refrigeration system.

55.6.1 Servicing Expansion Valves

The operation of different expansion valves is described in Chapter 20, *Metering Devices*. All types of refrigerant controls may be found in commercial systems. Systems having a self-contained hermetic unit may be serviced as described in Chapter 26, *Service and Repair of Domestic Refrigerators and Freezers*. However, multiple-evaporator systems and larger commercial units have other features that a service technician must understand.

Removing Expansion Valves

A faulty expansion valve should be removed and replaced with one in good condition. The troublesome valve may then be checked in a shop equipped for this purpose. In this way the trouble can be accurately determined.

When removing an expansion valve, as much refrigerant as possible should be pumped down or recovered before opening the refrigerant circuit. Close any valves located between the liquid line and the expansion valve. These may include a liquid line solenoid valve, manifold valves, or any shutoff valves.

In multiple-evaporator systems, individual shutoff valves can isolate the evaporators and reduce the amount of refrigerant pumped down or recovered. When installing a replacement expansion valve, be sure to mount and insulate its sensing bulb properly. Ensure that a replacement TXV has compatible properties, such as its superheat range/setting, valve orifice size, equalization connection, and refrigerant type.

Repairing Clogged Expansion Valve Screens

A clogged screen in an expansion valve's inlet may be easily detected. Indications are poor refrigeration, sweating or frosting only near the TXV, and the absence of the sound of refrigerant circulating. A clog will result in the starving of the evaporator. The compressor will pump out much of the refrigerant from the evaporator, leaving only low-pressure vapor or a slight vacuum. No liquid refrigerant should remain on the low side.

Removing an expansion valve having a clogged screen requires removing as much refrigerant from the lines to be opened as possible. The liquid line may be carefully heated with a heat lamp. This drives the liquid refrigerant back to the nearest shutoff valve. This valve then is closed.

The evaporator should already be evacuated of liquid refrigerant due to the clog allowing the compressor to draw a low pressure. A lack of liquid refrigerant is indicated by a warm evaporator. If an evaporator is not warm and has some pressure in it, run the compressor until pressure is at atmospheric pressure.

Copyright Goodheart-Willcox Co., Inc.

Valves along the suction line may be closed if low-side pressure is at atmospheric pressure. If evaporator pressure is below atmospheric pressure, bypass just enough vapor refrigerant from the high side to the low side through the gauge manifold to bring evaporator pressure up to atmospheric pressure. After cleaning and drying the connections, the system may be opened to remove the screen.

Some TXVs have their inlet screens installed within their inlet tubing. These require the liquid line to be disconnected from the TXV in order to access the inlet screen. Other TXVs are built with inlet screens attached to a bolt that may be easily removed without having to disconnect the liquid line, **Figure 55-23**. Review TXV manufacturer literature before opening the refrigerant circuit.

Clean the screen or replace it with a new one. Fine-mesh copper or stainless steel screens are cleaned well with air pressure and safe solvent. However, the best way is to replace the screen and any gaskets supplied in a TXV repair kit. Never install an expansion valve into service without an inlet screen between the liquid line and the valve.

Install the new or cleaned screen and reassemble the components. Then evacuate the part of the system that was open to atmosphere. Test for leaks. Return the evaporator to normal operation by opening the closed valves.

Adjusting Thermostatic Expansion Valves (TXVs)

A TXV's sensing bulb should be secured to the suction line tubing. This is done at the point where it attaches to the evaporator, though not on a joint or any location where there will not be maximum surface area contact.

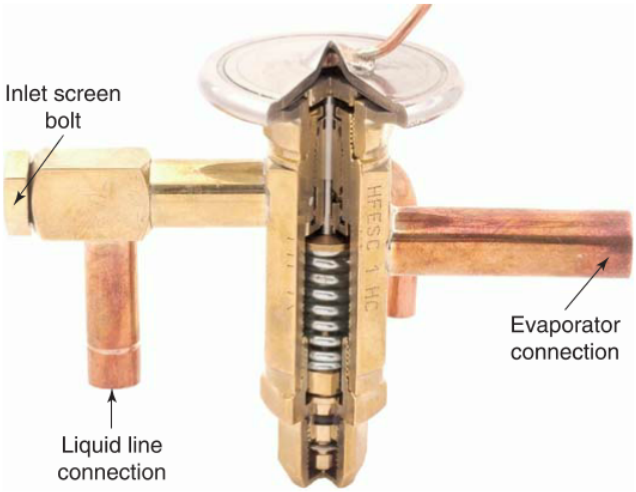

Emerson Climate Technologies

Figure 55-23. This TXV has an inlet screen that can be removed without opening the liquid line connection.

In service, a thermostatic expansion valve may be adjusted as follows:

1. While the compressor is cycled on, determine the temperature of the evaporator by measuring low-side pressure and converting the value using a P/T chart.
2. Adjust the TXV to allow more or less refrigerant into the evaporator based on evaporator superheat settings and measurements. **Figure 55-24** shows the internal components of a thermostatic

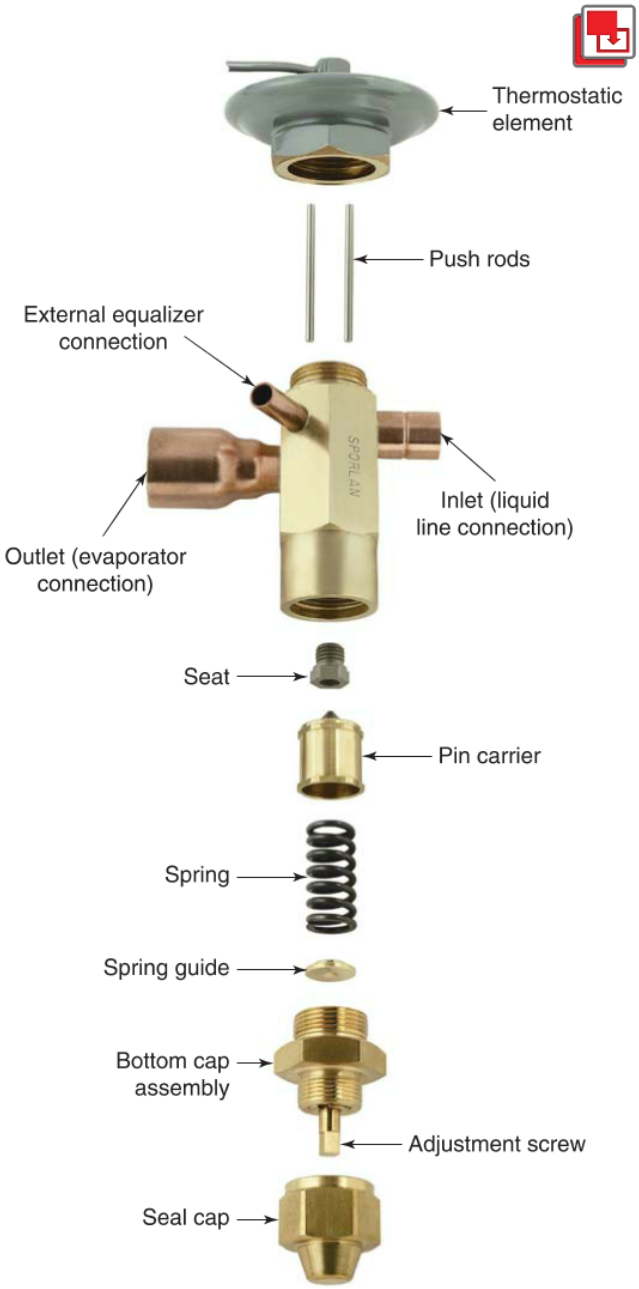

Courtesy of Sporlan Division - Parker Hannifin Corporation

Figure 55-24. Thermostatic expansion valve components. Note the adjustment screw.

Copyright Goodheart-Willcox Co., Inc.

expansion valve. This TXV's adjustment screw is located on the bottom.

3. If the suction line frosts up, adjust the TXV to reduce the refrigerant flow. Superheat settings are generally based on the temperature range used for a conditioned space. Medium-temperature refrigeration uses 6°F to 8°F, and low-temperature refrigeration uses 3°F to 4°F.

Servicing Electronic Expansion Valves (EEVs)

The motor section of an EEV is often hermetically sealed and may not always be serviced. **Figure 55-25** illustrates a typical electronic expansion valve body, wiring, circuitry, and spare parts. The valve body and pin of an electronic expansion valve may be serviced similar to mechanical valves. Calibration of the valve is required following service of an electronic expansion valve. Review manufacturer literature for possible service procedures and diagnostic troubleshooting using an EEV's control unit, **Figure 55-26**.

Danfoss

Figure 55-26. Manufacturer diagnostic codes on control units can reduce troubleshooting time.

55.6.2 Servicing Evaporator Pressure Regulators (EPRs)

EPRs are commonly used on multiple-evaporator systems to regulate one evaporator to a different temperature than the other evaporators piped in parallel. If an EPR has been tampered with, it may need to be readjusted. Always use a pressure gauge when adjusting an EPR's setting. Refer to a P/T chart with the system refrigerant for the proper pressure and corresponding temperature. A thermometer may be used to help monitor and correct evaporator temperature during the adjustment. The adjustment nut should not be turned more than a half-turn at a time. A 15-minute

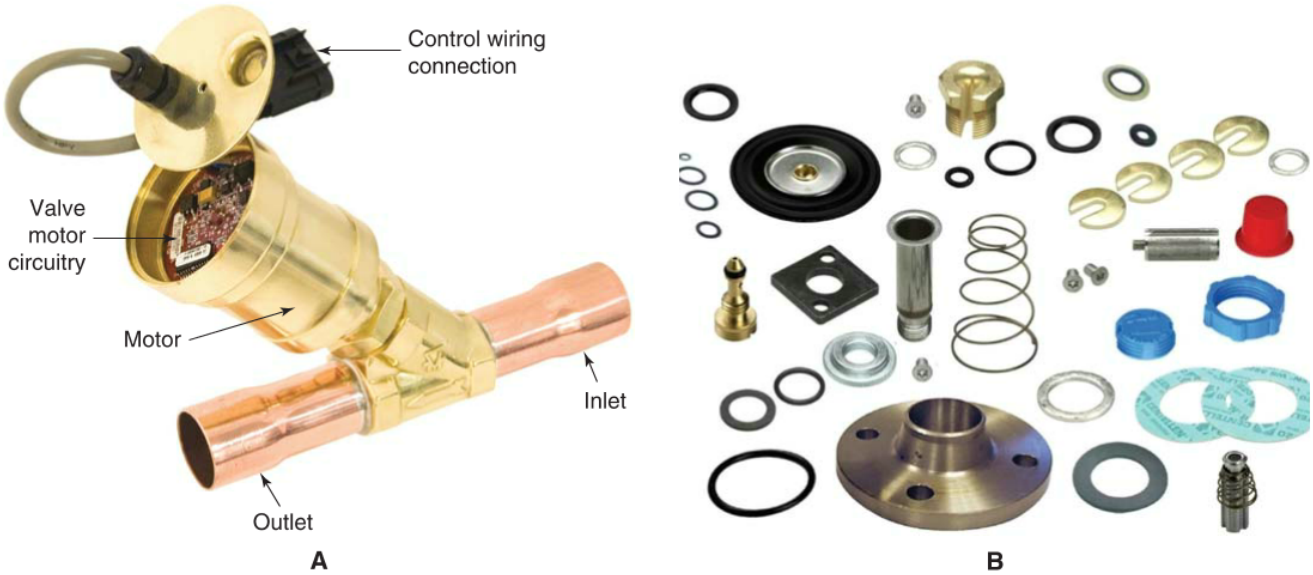

Courtesy of Sporlan Division - Parker Hannifin Corporation; Danfoss

Figure 55-25. A—Electronic expansion valve. Note the wiring that connects to the valve controller. B—Valves components that become worn may be replaced with spare parts.

Copyright Goodheart-Willcox Co., Inc.

interval of system operation should pass between each adjustment. This permits the evaporator to completely respond to the new pressure.

Many EPRs have an access port on their inlet tubing connecting to the evaporator. This allows a technician to connect a pressure gauge to verify corresponding pressure and temperature values during system operation and EPR calibration. Pressure readings would show evaporator pressure, not suction line pressure. However, an access port is not available on all EPRs.

When installing an EPR, install a shutoff valve on its outlet to the suction line. This will allow the evaporator to be isolated from the other evaporators in a multiple-evaporator system. This shutoff valve should have an access port, which will allow a technician to use a pressure gauge to measure suction line pressure. Having a shutoff valve with an access port installed between each EPR and the suction line will make maintenance and service work easier.

55.6.3 Replacing Hot-Gas Valves

When replacing a hot-gas valve, a technician must examine and thoroughly understand the particular refrigeration system being serviced. A hot-gas valve bridges the high side and low side. The technician will need to determine how best to evacuate refrigerant from different parts of the system and determine which valves can be used to reduce the size of the refrigerant circuit that will have to be opened to atmosphere. This may be a challenge, as hot-gas valves can connect to the low side at several different places, such as between an expansion valve's distributor and the evaporator or several places along the suction line.

To replace a hot-gas valve, refrigerant must be pumped down or recovered from the system. Then balance the pressures, either by bypassing a small amount of vapor through a gauge manifold or adding a low-pressure amount of nitrogen, depending on the type of joint around the hot-gas valve. Remove the valve, plugging refrigerant openings as soon as they are opened. Install a new valve. Test the system for leaks. Evacuate the part of the system opened to atmosphere. Recharge the system or allow refrigerant back into the part of the system serviced.

55.6.4 Replacing Service Valves

Occasionally a service valve stem will break or its threads will be stripped. Often the valve must be replaced. The location of the valve and the type of refrigeration system will determine the replacement service valve, **Figure 55-27**.

Mueller Industries, Inc.

Figure 55-27. Compressor service valves vary in size and build.

If it is a suction service valve, pump down or recover all refrigerant from the evaporator (unless the evaporator has hand shutoff valves), then balance the pressure.

To remove a discharge service valve or a liquid receiver service valve, first recover the entire refrigerant charge from the system. Close any service valves and shutoff valves to isolate as much of the system as possible from where it will be opened to atmosphere. In the part of the system to be opened for service, equalize the pressure to atmosphere.

Most open-drive compressors use bolt-on service valves. These may be unbolted and replaced with new valves and new gaskets. Some liquid receiver service valves are also removable. However, hermetic compressors may have service valves welded to the compressor dome, which may not be removed from the unit. If the entire valve cannot be replaced, it is often possible to replace the valve stem, valve seat, and packing gland.

55.6.5 Replacing Solenoid Valves

If a solenoid valve is being replaced, it is important that the solenoid be of the proper voltage and amperage rating. Otherwise, the coil may burn out. A 120 V valve cannot be connected to a 240 V circuit. The valve must also be able to withstand the pressure of the refrigerant in that part of the system, **Figure 55-28**.

To remove a solenoid valve from the system, isolate the smallest amount of the refrigerant circuit as possible and use the same pump-down or recovery procedure as previously described. Balance pressures before opening the system and plug refrigerant openings as quickly as possible.

55.7 Reconditioning Equipment after a Flood

Refrigeration equipment that has been exposed to flooding must be carefully reconditioned before attempting start-up. Clean and dry the entire outside of the

Copyright Goodheart-Willcox Co., Inc.

A B

Emerson Climate Technologies

Figure 55-28. A—Solenoid valves (without coils). B—A coil to be installed onto a solenoid valve.

equipment. Use a detergent and bacteria cleanser. Replace all open motors or have them completely reworked.

Replace all external electrical parts. If attempting to clean and reuse them, an electric insulation leak inhibitor must be used.

Replace capacitors, relays, overload devices, and limit switches. Clean compressor terminals and spray with electrical insulation leak inhibitor. Check the electrical system completely with an ohmmeter. Check especially for grounds.

Copyright Goodheart-Willcox Co., Inc.

Summary

- When servicing a system, be mindful of preventing personal and product harm. Always perform atmospheric balancing (pressure equalizing) before opening any part of a system. Monitor pressures throughout service procedures.
- Before opening a system's refrigerant circuit, shut as many valves as possible to isolate and reduce the amount of the system opened to atmosphere. Always clean and dry any joints that will be opened. Immediately plug refrigerant openings.
- When recovering refrigerant, immerse the recovery cylinder in an ice water bath to prevent high head pressure and temperature and to reduce recovery time. Gently warming parts of the refrigerant circuit also reduces recovery time.
- When reassembling a refrigeration system, clean and dry every part being installed. Pull a vacuum on any part of the system that has been opened to atmosphere before recharging with refrigerant.
- Proper lubrication of motor bearings is important. While overflow openings may allow excess oil to drain off, only add the necessary amount of lubricant. Keep motor parts clean and free of dust and dirt.
- A motor burnout involves the deteriorating of motor winding insulation due to overheating. In a hermetic or semi-hermetic compressor, a burnout can lead to the formation of acid in the refrigerant circuit that can ruin many system parts.
- Accumulated dirt and grime on the fins and tubes of air-cooled condensers must be cleaned off to maximize heat transfer potential.
- To remove or replace an air-cooled condenser, the refrigerant charge must be pumped down into the liquid receiver or recovered into a recovery cylinder. Condenser pressure must be balanced with atmosphere before opening the system.
- When removing a water-cooled condenser, the water circuit must be shut off, disconnected, and drained. To ensure a complete removal of water, blow out the water passageways using nitrogen, air, or carbon dioxide.
- Inadequate flow through a water valve reduces heat exchange and increases head pressure in a water-cooled condenser. Excessive water flow is costly and wasteful. Constant water flow is costly, wasteful, and counterproductive for hot-gas defrost functions.
- When replacing a water valve, begin by shutting off the water supply. Motorized and solenoid water valves have wiring to disconnect. A pressure water valve has refrigerant connections to undo. After replacing a water valve, check it for leaks, outlet water temperature, water flow, and head pressure.
- Evaporative condensers and cooling towers must be cleaned to eliminate heat-insulating deposits. Regular maintenance of cooling towers includes checking belt condition, water level, air passageways, pumps, strainer cleanliness, and fan and motor bearings and lubrication.
- Liquid line tubing must be supported and protected from damage along its entire length. When admitting liquid refrigerant back into a liquid line, slowly open the liquid receiver service valve. Use temperature surveys to locate unintentional pressure drops caused by restrictions.
- Indications of a clogged expansion valve include poor refrigeration, sweating or frosting only near the TXV, and the absence of the sound of circulating refrigerant. Its inlet screen may be installed inside the inlet piping or on a removable bolt.
- An EEV should be calibrated after service. Review manufacturer literature for how to use an EEV's controller for service and diagnostics.
- Temperature and pressure readings help when setting an EPR. Allow 15 minutes of operation for the temperature response to stabilize after each adjustment.
- When servicing or replacing hot-gas valves, thoroughly examine the system to see how best to isolate the part of the system to open to atmosphere for service.
- When replacing service valves, examine the system for options. In some cases, the entire refrigerant charge may need to be recovered. When replacing solenoid valves, find a valve with compatible voltage, current, and pressure ratings.

Copyright Goodheart-Willcox Co., Inc.

Review Questions

Answer the following questions using the information in this chapter.

1. In order to prevent noncondensables and contaminants from entering a refrigerant circuit, just before opening a system to atmosphere for service, a technician should _____.
   A. balance pressure with atmospheric pressure
   B. disconnect the gauge manifold
   C. increase pressure to at least 225 psi
   D. reduce pressure into a vacuum
2. A common method for reducing recovery time and preventing the development of high head pressure during recovery is to _____.
   A. immerse the recovery cylinder in an ice water bath
   B. run cold water over the condenser
   C. run cold water over the evaporator
   D. use a torch to gently warm the recovery cylinder
3. When pumping down a system, the best way to deal with safety controls that could cycle off the compressor is to _____.
   A. attempt to adjust their settings out of range
   B. completely disconnect them from the circuit
   C. connect a jumper wire across its terminals
   D. physically hold all the controls in the closed position
4. If an open-drive compressor is set down with its weight on its attached flywheel, a leak could develop at the _____.
   A. compressor head
   B. crankshaft seal
   C. inlet valve
   D. service valve packing
5. A motor burnout in a hermetic compressor will result in the development of a(n) _____ condition.
   A. acidic
   B. adiabatic
   C. alkaline
   D. azeotropic
6. When a motor burnout occurs, aside from the hermetic compressor, the rest of the refrigeration system can usually be reconditioned by flushing it with _____.
   A. ammonia
   B. butane
   C. muriatic solution
   D. nitrogen
7. Before adding refrigerant oil to a refrigeration system, ensure that the oil meets the following guidelines, *except* _____.
   A. able to work in the low-side temperature range
   B. compatible with the refrigerant
   C. has a high wax content
   D. proper viscosity for the compressor
8. Common methods of adding refrigerant oil to a refrigeration system include the following methods, *except* _____.
   A. drawing oil into the suction service valve through tubing immersed in an oil-filled container
   B. dumping it into the liquid receiver service valve while the compressor is operating
   C. injecting oil manually using a hand pump
   D. pouring oil into the compressor crankcase after balancing pressure with atmosphere
9. If a compressor makes a grinding or banging sound after refrigerant has been added, _____.
   A. add more refrigerant
   B. add refrigerant oil
   C. remove refrigerant oil
   D. repeatedly strike the compressor with a rubber mallet
10. When removing an installed water-cooled condenser, first empty the condenser of _____ and then remove the _____.
    A. oil; desiccant
    B. oil; water
    C. refrigerant; water
    D. water; refrigerant
11. Chemicals are added to cooling tower water to address the following problems, *except* _____.
    A. algae
    B. conductivity
    C. mold
    D. slime

Copyright Goodheart-Willcox Co., Inc.

12. Along the liquid line, when a _____ is heated, it can release moisture back into the refrigerant.
    A. filter-drier
    B. shutoff valve
    C. sight glass
    D. solenoid valve
13. Indications of an expansion valve having a clogged inlet screen include the following, *except* _____.
    A. the absence of the sound of refrigerant circulating
    B. excessive refrigeration
    C. poor refrigeration
    D. sweating or frosting only near the expansion valve
14. When adjusting the setting of an EPR, wait approximately _____ of operation time to allow the new evaporator temperature to stabilize before additional adjustments.
    A. 10 seconds
    B. 1 minute
    C. 3 minutes
    D. 15 minutes
15. An access port on an EPR's inlet tubing can be used to measure _____ pressure.
    A. evaporator
    B. head
    C. liquid line
    D. suction

Copyright Goodheart-Willcox Co., Inc.

Appendix Contents

Appendix A: Service Information

A.1 Review of Abbreviations and Symbols 1525
A.2 Twist Drill Sizes 1526
A.3 Piping Color Codes 1527
A.4 Threshold Limit Values 1527
A.5 Circular Equivalents of Rectangular Duct 1528

Appendix B: Troubleshooting Charts

B.1 Hermetic Refrigeration System Troubleshooting Chart 1529
B.2 Domestic and Light Commercial Systems Troubleshooting Chart 1532
B.3 Industrial Refrigeration Troubleshooting Chart 1535
B.4 Flake Ice Machine Troubleshooting Chart 1539

Appendix C: Refrigerants

C.1 Critical Temperatures of Refrigerants . . . 1542
C.2 Characteristics of Little-Used Refrigerants 1543
C.3 R-22 Pressure-Enthalpy Diagram . . . 1544
C.4 R-22 Pressure-Enthalpy Table 1544
C.5 R-123 Pressure-Enthalpy Diagram . . 1545
C.6 R-123 Pressure-Enthalpy Table 1545
C.7 R-401A Pressure-Enthalpy Diagram . . . 1546
C.8 R-401A Pressure-Enthalpy Table 1546
C.9 R-404A Pressure-Enthalpy Diagram . . . 1547
C.10 R-404A Pressure-Enthalpy Table 1547
C.11 R-407C Pressure-Enthalpy Diagram . . . 1548
C.12 R-407C Pressure-Enthalpy Table 1548
C.13 R-410A Pressure-Enthalpy Diagram . . . 1549
C.14 R-410A Pressure-Enthalpy Table 1549
C.15 R-507A Pressure-Enthalpy Diagram . . . 1550
C.16 R-507A Pressure-Enthalpy Table 1550
C.17 R-508B Pressure-Enthalpy Diagram . . . 1551
C.18 R-508B Pressure-Enthalpy Table 1551

Appendix D: Electricity and Electronics

D.1 Electrical Units and Symbols 1552
D.2 Resistor Color Codes 1552
D.3 Galvanic Action Sequence 1552

Appendix E: Heat, Temperature, and Pressure

E.1 Latent Heat Values 1553
E.2 Standard Conditions 1553
E.3 Heating Value of Fuels 1553
E.4 Thermal Conductivity 1554
E.5 Refrigerant Pressure-Temperature Chart 1555
E.6 Weights and Specific Heats of Substances 1556
E.7 Water Boiling Temperatures 1556
E.8 Brine Freezing Temperatures 1556

Appendix F: Equivalent Charts

F.1 Energy Equivalents (US Customary) . . 1558
F.2 Linear Measurement Equivalents 1558
F.3 Fractional Inch Equivalents (Decimals and Millimeters) 1559
F.4 Area Equivalents 1560
F.5 Volume Equivalents 1560
F.6 Pressure Equivalents 1560
F.7 Velocity Equivalents 1560
F.8 Liquid Measure Equivalents 1561
F.9 Weight Equivalents 1561
F.10 Flow Equivalents 1561
F.11 Heat Equivalents 1561
F.12 Temperature Conversion Table 1562

Appendix G: EPA Certification. . . . 1566

Appendix H: HVACR-Related Associations and Organizations . . 1573

Appendix A: Service Information

A.1 Review of Abbreviations and Symbols

US Customary Units

°F = degrees Fahrenheit
°R = degrees Rankine = degrees Fahrenheit absolute
Btu = British thermal unit
Btu/hr = British thermal units per hour
cfm = cubic feet per minute
fpm = feet per minute
ft = foot or feet = ′
ft^2 = square foot
ft^3 = cubic foot
ft-lb = foot-pound
hp = horsepower
in = inches = ″
in. Hg = inches of mercury
in^2 = square inch
in^3 = cubic inch
lb = pound
lb/ft^3 = pounds per cubic foot
psi = pounds per square inch
psia = pounds per square inch, absolute
psig = pounds per square inch, gauge
qt = quart
ton = ton of refrigeration effect

SI Metric Units

°C = degrees Celsius
cm = centimeter
cm^2 = square centimeter
cm^3 = cubic centimeter
g = gram
J = joule
K = kelvin
kg = kilogram
kJ = kilojoule
kPa = kilopascal
kW = kilowatt
L = liter
m = meter
m^2 = square meter
m^3 = cubic meter
mm = millimeter
MW = megawatt
N = newton
Pa = pascal
W = watt

Miscellaneous Abbreviations and Symbols

π = 3.1416 (a constant used in determining the area of a circle)
Δ = delta = difference
∞ = infinity
A = area
c = specific heat
D = diameter
h = specific enthalpy (Btu/lb or kJ/kg)
H = total enthalpy
hr = hour(s)
Hz = hertz
in. WC = inches of water column
k = gas constant
m = mass
p = pressure
Q = heat energy
r = radius of circle
rh = relative humidity
sec = second(s)
RT = reference temperature
V = volume

Copyright Goodheart-Willcox Co., Inc.

A.2 Twist Drill Sizes

Drill Number	Decimal Size	Drill Number	Decimal Size	Drill Number	Decimal Size
1	0.2280	28	0.1405	55	0.0520
2	0.2210	29	0.1360	56	0.0465
3	0.2130	30	0.1285	57	0.0430
4	0.2090	31	0.1200	58	0.0420
5	0.2055	32	0.1160	59	0.0410
6	0.2040	33	0.1130	60	0.0400
7	0.2010	34	0.1110	61	0.0390
8	0.1990	35	0.1100	62	0.0380
9	0.1960	36	0.1065	63	0.0370
10	0.1935	37	0.1040	64	0.0360
11	0.1910	38	0.1015	65	0.0350
12	0.1890	39	0.0995	66	0.0330
13	0.1850	40	0.0980	67	0.0320
14	0.1820	41	0.0960	68	0.0310
15	0.1800	42	0.0935	69	0.0292
16	0.1770	43	0.0890	70	0.0280
17	0.1730	44	0.0860	71	0.0260
18	0.1695	45	0.0820	72	0.0250
19	0.1660	46	0.0810	73	0.0240
20	0.1610	47	0.0785	74	0.0225
21	0.1590	48	0.0760	75	0.0210
22	0.1570	49	0.0730	76	0.0200
23	0.1540	50	0.0700	77	0.0180
24	0.1520	51	0.0670	78	0.0160
25	0.1495	52	0.0635	79	0.0145
26	0.1470	53	0.0595	80	0.0135
27	0.1440	54	0.0550		
Drill Letter	**Decimal Size**	**Drill Letter**	**Decimal Size**	**Drill Letter**	**Decimal Size**
A	0.234	J	0.277	S	0.348
B	0.238	K	0.281	T	0.358
C	0.242	L	0.290	U	0.368
D	0.246	M	0.295	V	0.377
E	0.250	N	0.302	W	0.386
F	0.257	O	0.316	X	0.397
G	0.261	P	0.323	Y	0.404
H	0.266	Q	0.332	Z	0.413
I	0.272	R	0.339		

Copyright Goodheart-Willcox Co., Inc.

A.3 Piping Color Codes	
Equipment/Material	**Color**
Fire protection equipment	Red
Safe material	Green (or, if needed, white, gray, or aluminum)
Protective material	Bright blue
Extra-valuable material	Deep purple
Dangerous material	Yellow or orange

A.4 Threshold Limit Values

Threshold limit values have been determined for certain substances that may be toxic under certain conditions and lengths of exposure. These threshold limit values were published by the American Conference of Governmental Industrial Hygienists. The following table shows threshold values for some of these substances for an eight-hour exposure time.

A.4 Threshold Limit Values (eight-hour exposure time)	
Substance	**Parts per million (PPM)**
Acetone	1000
Ammonia	50
Carbon dioxide	5000
Carbon monoxide	100
Carbon tetrachloride–Skin	10
Chlorine	1
Dichlorodifluoromethane	1000
Dichloromonofluoromethane	1000
Ethyl ether	400
Fluorine	0.1
Gasoline	500
Methyl acetylene	1000
Methyl alcohol (methanol)	200
Methyl chloride	100
Ozone	0.1
Sulfur dioxide	5
Xylene (xylol)	200

Copyright Goodheart-Willcox Co., Inc.

A.5 Circular Equivalents of Rectangular Duct

Length of One Side of Rectangular Duct (*a*), in.

Lgth Adj	4.0	4.5	5.0	5.5	6.0	6.5	7.0	7.5	8.0	9.0	10.0	11.0	12.0	13.0	14.0	15.0	16.0
3.0	3.8	4.0	4.2	4.4	4.6	4.7	4.9	5.1	5.2	5.5	5.7	6.0	6.2	6.4	6.6	6.8	7.0
3.5	4.1	4.2	4.6	4.8	5.0	5.2	5.3	5.5	5.7	6.0	6.3	6.5	6.8	7.0	7.2	7.5	7.7
4.0	4.4	4.6	4.9	5.1	5.3	5.5	5.7	5.9	6.1	6.4	6.7	7.0	7.3	7.6	7.8	8.0	8.3
4.5	4.6	4.9	5.2	5.4	5.7	5.9	6.1	6.3	6.5	6.9	7.2	7.5	7.8	8.1	8.4	8.6	8.8
5.0	4.9	5.2	5.5	5.7	6.0	6.2	6.4	6.7	6.9	7.3	7.6	8.0	8.3	8.6	8.9	9.1	9.4
5.5	5.1	5.4	5.7	6.0	6.3	6.5	6.8	7.0	7.2	7.6	8.0	8.4	8.7	9.0	9.3	9.6	9.9

Length of One Side of Rectangular Duct (*a*), in.

Lgth Adj	6	7	8	9	10	11	12	13	14	15	16	17	18	19	20	22	24	26	28	30	Lgth Adj
6	6.6																				**6**
7	7.1	7.7																			**7**
8	7.6	8.2	8.7																		**8**
9	8.0	8.7	9.3	9.8																	**9**
10	8.4	9.1	9.8	10.4	10.9																**10**
11	8.8	9.5	10.2	10.9	11.5	12.0															**11**
12	9.1	9.9	10.7	11.3	12.0	12.6	13.1														**12**
13	9.5	10.3	11.1	11.8	12.4	13.1	13.7	14.2													**13**
14	9.8	10.8	11.4	12.2	12.9	13.5	14.2	14.7	15.3												**14**
15	10.1	11.0	11.8	12.6	13.3	14.0	14.6	15.3	15.8	16.4											**15**
16	10.4	11.3	12.2	13.0	13.7	14.4	15.1	15.7	16.4	16.9	17.5										**16**
17	10.7	11.6	12.5	13.4	14.1	14.9	15.6	16.2	16.8	17.4	18.0	18.6									**17**
18	11.0	11.9	12.9	13.7	14.5	15.3	16.0	16.7	17.3	17.9	18.5	19.1	19.7								**18**
19	11.2	12.2	13.2	14.1	14.9	15.7	16.4	17.1	17.8	18.4	19.0	19.6	20.2	20.8							**19**
20	11.5	12.6	13.5	14.4	15.2	16.0	16.8	17.5	18.2	18.9	19.5	20.1	20.7	21.3	21.9						**20**
22	12.0	13.0	14.1	15.0	15.9	16.8	17.6	18.3	19.1	19.8	20.4	21.1	21.7	22.3	22.9	24.0					**22**
24	12.4	13.5	14.6	15.6	16.5	17.4	18.3	19.1	19.9	20.6	21.3	22.0	22.7	23.3	23.9	25.1	26.2				**24**
26	12.8	14.0	15.1	16.2	17.1	18.1	19.0	19.8	20.6	21.4	22.1	22.9	23.5	24.2	24.9	26.1	27.3	28.4			**26**
28	13.2	14.5	15.6	16.7	17.7	18.7	19.6	20.5	21.3	22.1	22.9	23.7	24.4	25.1	25.8	27.1	28.3	29.5	30.6		**28**
30	13.6	14.9	16.1	17.2	18.3	19.3	20.2	21.1	22.0	22.9	23.7	24.4	25.2	25.9	26.6	28.0	29.3	30.5	31.7	32.8	**30**
32	14.0	15.3	16.5	17.7	18.8	19.8	20.8	21.8	22.7	23.5	24.4	25.2	26.0	26.7	27.5	28.9	30.2	31.5	32.7	33.9	**32**
34	14.4	15.7	17.0	18.2	19.3	20.4	21.4	22.4	23.3	24.2	25.1	25.9	26.7	27.5	28.3	29.7	31.0	32.4	33.7	34.9	**34**
36	14.7	16.1	17.4	18.6	19.8	20.9	21.9	22.9	23.9	24.8	25.7	26.6	27.4	28.2	29.0	30.5	32.0	33.3	34.6	35.9	**36**
38	15.0	16.5	17.8	19.0	20.2	21.4	22.4	23.5	24.5	25.4	26.4	27.2	28.1	28.9	29.8	31.3	32.8	34.2	35.6	36.8	**38**
40	15.3	16.8	18.2	19.5	20.7	21.8	22.9	24.0	25.0	26.0	27.0	27.9	28.8	29.6	30.5	32.1	33.6	35.1	36.4	37.8	**40**
42	15.6	17.1	18.5	19.9	21.1	22.3	23.4	24.5	25.6	26.6	27.6	28.5	29.4	30.3	31.2	32.8	34.4	35.9	37.3	38.7	**42**
44	15.9	17.5	18.9	20.3	21.5	22.7	23.9	25.0	26.1	27.1	28.1	29.1	30.0	30.9	31.8	33.5	35.1	36.7	38.1	39.5	**44**
46	16.2	17.8	19.3	20.6	21.9	23.2	24.4	25.5	26.6	27.7	28.7	29.7	30.6	31.6	32.5	34.2	35.9	37.4	38.9	40.4	**46**
48	16.5	18.1	19.6	21.0	22.3	23.6	24.8	26.0	27.1	28.2	29.2	30.2	31.2	32.2	33.1	34.9	36.6	38.2	39.7	41.2	**48**
50	16.8	18.4	19.9	21.4	22.7	24.0	25.2	26.4	27.6	28.7	29.8	30.8	31.8	32.8	33.7	35.5	37.2	38.9	40.5	42.0	**50**
52	17.1	18.7	20.2	21.7	23.1	24.4	25.7	26.9	28.0	29.2	30.3	31.3	32.3	33.3	34.3	36.2	37.9	39.6	41.2	42.8	**52**
54	17.3	19.0	20.6	22.0	23.5	24.8	26.1	27.3	28.5	29.7	30.8	31.8	32.9	33.9	34.9	36.8	38.6	40.3	41.9	43.5	**54**
56	17.6	19.3	20.9	22.4	23.8	25.2	26.5	27.7	28.9	30.1	31.2	32.3	33.4	34.4	35.4	37.4	39.2	41.0	42.7	44.3	**56**
58	17.8	19.5	21.2	22.7	24.2	25.5	26.9	28.2	29.4	30.6	31.7	32.8	33.9	35.0	36.0	38.0	39.8	41.6	43.3	45.0	**58**
60	18.1	19.8	21.5	23.0	24.5	25.9	27.3	28.6	29.8	31.0	32.2	33.3	34.4	35.5	36.5	38.5	40.4	42.3	44.0	45.7	**60**
62		20.1	21.7	23.3	24.8	26.3	27.6	28.9	30.2	31.5	32.6	33.8	34.9	36.0	37.1	39.1	41.0	42.9	44.7	46.4	**62**
64		20.3	22.0	23.6	25.1	26.6	28.0	29.3	30.6	31.9	33.1	34.3	35.4	36.5	37.6	39.6	41.6	43.5	45.3	47.1	**64**
66		20.6	22.3	23.9	25.5	26.9	28.4	29.7	31.0	32.3	33.5	34.7	35.9	37.0	38.1	40.2	42.2	44.1	46.0	47.7	**66**
68		20.8	22.6	24.2	25.8	27.3	28.7	30.1	31.4	32.7	33.9	35.2	36.3	37.5	38.6	40.7	42.8	44.7	46.6	48.4	**68**
70		21.1	22.8	24.5	26.1	27.6	29.1	30.4	31.8	33.1	34.4	35.6	36.8	37.9	39.1	41.2	43.3	45.3	47.2	49.0	**70**
72			23.1	24.8	26.4	27.9	29.4	30.8	32.2	33.5	34.8	36.0	37.2	38.4	39.5	41.7	43.8	45.8	47.8	49.6	**72**
74			23.3	25.1	26.7	28.2	29.7	31.2	32.5	33.9	35.2	36.4	37.7	38.8	40.0	42.2	44.4	46.4	48.4	50.3	**74**
76			23.6	25.3	27.0	28.5	30.0	31.5	32.9	34.3	35.6	36.8	38.1	39.3	40.5	42.7	44.9	47.0	48.9	50.9	**76**
78			23.8	25.6	27.3	28.8	30.4	31.8	33.3	34.6	36.0	37.2	38.5	39.7	40.9	43.2	45.4	47.5	49.5	51.4	**78**
80			24.1	25.8	27.5	29.1	30.7	32.2	33.6	35.0	36.3	37.6	38.9	40.2	41.4	43.7	45.9	48.0	50.1	52.0	**80**
82				26.1	27.8	29.4	31.0	32.5	34.0	35.4	36.7	38.0	39.3	40.6	41.8	44.1	46.4	48.5	50.6	52.6	**82**
84				26.4	28.1	29.7	31.3	32.8	34.3	35.7	37.1	38.4	39.7	41.0	42.2	44.6	46.9	49.0	51.1	53.2	**84**
86				26.6	28.3	30.0	31.6	33.1	34.6	36.1	37.4	38.8	40.1	41.4	42.6	45.0	47.3	49.6	51.7	53.7	**86**
88				26.9	28.6	30.3	31.9	33.4	34.9	36.4	37.8	39.2	40.5	41.8	43.1	45.5	47.8	50.0	52.2	54.3	**88**
90				27.1	28.9	30.6	32.2	33.8	35.3	36.7	38.2	39.5	40.9	42.2	43.5	45.9	48.3	50.5	52.7	54.8	**90**
92					29.1	30.8	32.5	34.1	35.6	37.1	38.5	39.9	41.3	42.6	43.9	46.4	48.7	51.0	53.2	55.3	**92**
96					29.6	31.4	33.0	34.7	36.2	37.7	39.2	40.6	42.0	43.3	44.7	47.2	49.6	52.0	54.2	56.4	**96**

Copyright Goodheart-Willcox Co., Inc.

Appendix B: Troubleshooting Charts

Troubleshooting Charts

Four different troubleshooting charts are included here for study. They cover domestic hermetic refrigeration, domestic and light commercial refrigeration, industrial refrigeration, and flake ice machines. Most troubleshooting charts, and all of these examples, are based on the assumption that the equipment was previously operable.

The hermetic refrigeration system troubleshooting chart is designed for use with hermetic refrigeration systems, like the type used in self-contained refrigerators. Note the general introductory procedures and the system electrical check used if the compressor will not run. The hermetic refrigeration system diagnosis shown in this section is for a self-contained commercial food storage unit.

The domestic and light commercial systems troubleshooting chart is used to diagnose refrigerated display cases, coolers, and walk-in freezers. The introductory section provides additional explanations for some of the possible causes and repairs listed in the chart.

The industrial refrigeration troubleshooting and service chart is used to diagnose industrial refrigeration equipment, like warehouse cold storage systems. It is assumed that only experienced, qualified persons would use this chart, and that the refrigeration equipment has been operational. It is written only for industrial refrigeration systems using open-drive reciprocating compressors.

The flake ice machine service procedure and troubleshooting chart includes an explanation of the sequence of operation and system schematic.

B.1 Hermetic Refrigeration System Diagnosis

1. General

   Each complaint is followed by probable causes and suggested repairs. To isolate the possible cause, proceed in a systematic manner to determine the faulty component. This guide does not cover all possible troubles and deficiencies that may occur under conditions of operation.

2. Electrical check

   A. Compressor does not run.

   1. Check power at outlet receptacle. Your compressor is designed to operate (see serial no. and data plate) on 115-60-1 with a voltage range of 103.5–126.5. Your 240/220-60-1 will operate within a range of ± 10%.
   2. Check thermostat for proper setting and continuity. Make sure control setting is not in an "Off" position. Continuity may be verified by following instructions on the individual compressor motor circuits.
   3. Look for obvious loose or broken wiring.
   4. Following systematically the instructions listed on the compressor motor circuitry, check the relay, overload, and, if employed, the start capacitor for continuity. Replace any components found faulty with the recommended service parts.

Troubleshooting and Service Chart

Complaint	Possible Cause	Repair
A. Compressor will not start—no hum.	1. Line disconnect switch open.	1. Close start or disconnect switch.
	2. Fuse removed or blown.	2. Replace fuse.
	3. Overload protector tripped.	3. Refer to electrical diagram.
	4. Control stuck in open position.	4. Repair or replace control.
	5. Control off due to cold location.	5. Relocate control.
	6. Wiring improper or loose.	6. Check wiring against diagram.
	7. No call from thermostat.	7. Test thermostat, replace if necessary.

(*continued*)

Copyright Goodheart-Willcox Co., Inc.

Troubleshooting and Service Chart		
Complaint	**Possible Cause**	**Repair**
B. Compressor will not start—hums.	1. Improperly wired.	1. Check wiring against diagram.
	2. Low voltage to unit.	2. Determine reason and correct.
	3. Starting capacitor defective.	3. Determine reason and replace.
	4. Relay failing to close.	4. Determine reason and correct, replace if necessary.
	5. Compressor motor has winding open or shorted.	5. Replace compressor.
	6. Internal mechanical trouble in compressor.	6. Replace compressor.
	7. Run capacitor defective.	7. Replace capacitor.
C. Compressor will not start—hums but trips on overload protector.	1. Improperly wired.	1. Check wiring against diagram.
	2. Low voltage to unit.	2. Determine reason and correct.
	3. Relay failing to open.	3. Determine reason and correct, replace if necessary.
	4. Run capacitor defective.	4. Determine reason and replace.
	5. Excessively high discharge pressure.	5. Check discharge shutoff, possible overcharge or insufficient cooling on condenser.
	6. Compressor motor has a winding open or shorted.	6. Replace compressor.
	7. Internal mechanical trouble in compressor (tight).	7. Replace compressor.
	8. Start relay and capacitor defective.	8. Replace.
D. Compressor starts and runs, but short cycles on overload protector.	1. Additional current through overload protector.	1. Check wiring diagram, check for added fan motors, pumps, etc., connected to wrong side of protector.
	2. Low voltage to unit.	2. Determine reason and correct.
	3. Overload protector defective.	3. Check current, replace protector.
	4. Run capacitor defective.	4. Determine reason and replace.
	5. Excessive discharge pressure.	5. Check ventilation, restrictions in cooling medium, restrictions in refrigeration system.
	6. Suction pressure too high.	6. Check for possibility of misapplication. Use stronger unit.
	7. Compressor too hot—return gas hot.	7. Check refrigerant charge (fix leak), add if necessary.
	8. Compressor motor has a winding shorted.	8. Replace compressor.
E. Unit runs ok, but short cycles.	1. Overload protector.	1. See D above.
	2. Thermostat.	2. Differential set too close—widen.
	3. High pressure cut-out due to:	
	a. Insufficient air.	3a. Check air to condenser—correct.
	b. Overcharge.	b. Reduce refrigerant charge.
	c. Air in system.	c. Purge.
	4. Low pressure cut-out due to:	
	a. Undercharge.	4a. Fix leak, add refrigerant.
	b. Restriction in metering device.	b. Replace metering device.

(*continued*)

Copyright Goodheart-Willcox Co., Inc.

Troubleshooting and Service Chart		
Complaint	**Possible Cause**	**Repair**
F. Unit operates too long or continuously.	1. Shortage of refrigerant. 2. Control contacts stuck or frozen closed. 3. Refrigerated space has excessive load or poor insulation. 4. System inadequate to handle load. 5. Evaporator coil iced. 6. Restriction in refrigeration system. 7. Dirty condenser. 8. Filter dirty.	1. Fix leak, add charge. 2. Clean contacts or replace control. 3. Determine fault and correct. 4. Replace with larger system. 5. Defrost. 6. Determine location and remove. 7. Clean condenser. 8. Clean or replace.
G. Start capacitor open, shorted, or blown.	1. Relay contacts not operating properly. 2. Prolonged operation on start cycle due to: a. Low voltage to unit. b. Improper relay. c. Starting load too high. 3. Excessive short cycling. 4. Improper capacitor.	1. Check and replace. 2a. Determine reason and correct. b. Replace. c. Correct by using pump down arrangement if necessary. 3. Determine reason for short cycling (see E above) and correct. 4. Determine correct size and replace.
H. Relay defective or burned out.	1. Incorrect relay. 2. Incorrect mounting angle. 3. Line voltage too high or too low. 4. Excessive short cycling. 5. Relay being influenced by loose, vibrating mounting. 6. Incorrect run capacitor.	1. Check and replace. 2. Remount relay in correct position. 3. Determine reason and correct. 4. Determine reason (see E) and correct. 5. Remount rigidly. 6. Replace with proper capacitor.
I. Space temperature too high.	1. Control setting too high. 2. Inadequate air circulation.	1. Reset control. 2. Improve air movement.
J. Suction line frosted or sweating.	1. Evaporator fan not running. 2. Overcharge of refrigerant.	1. Determine reason and correct. 2. Correct charge.
K. Liquid line frosted or sweating.	1. Restriction in dehydrator or strainer.	1. Replace part.
L. Unit noisy.	1. Loose parts or mounting. 2. Tubing rattle. 3. Bent fan blade causing vibration. 4. Fan motor bearings worn.	1. Find and tighten. 2. Reform to be free of contact. 3. Replace blade. 4. Replace motor.

Silver King Refrigeration, Inc.

Copyright Goodheart-Willcox Co., Inc.

B.2 Domestic and Light Commercial Systems

The Troubleshooting and Service Chart is fairly self-explanatory; however, a discussion of some of the complaints, possible causes, and repair solutions may be of some additional assistance.

COMPLAINT "A" is Compressor will not start—no hum.

Possible causes are:

1. *Switch open.* Rather obvious, but maybe it would be wise to determine why it is open or who opened it.
2. *Fuse removed or blown.* Again, was there a reason?
3. *Overload protector tripped.* Here, too, it is not a case of waiting until the overload resets, but rather to determine why.
4. *Control stuck in open position.* Faulty contactors may be a cause, although every effort is made to provide the best quality contactors. Heed this warning: Do not use the insulated end of a screwdriver to hold the contactor in. In doing so, you run the risk of burning out a good compressor.

COMPLAINT "B" is Compressor will not start—hums and trips on overload.

1. and 2. have been discussed (see Complaint "A").
3. *Starting capacitor defective.* It says "determine reason." Possibly a start capacitor was installed with too low a voltage rating.
4. *Relay failing to close.* Is the correct one being used?
5. *Compressor has a winding open or shorted.* The repair specified says simply "replace compressor." This means if the cause indicated has been proved conclusively, only then replace the compressor. Remember that replacing the compressor is generally the most costly repair bill an owner can get. So be sure.
6. *Internal mechanical trouble in compressor.* If the service person has proved without question that none of the other possible causes are the reason for the condition, then and only then can it be mechanical trouble.

A Troubleshooting Chart of this kind is not the entire answer. There are probably a number of other reasons for the cause of each "complaint" listed, so keep in mind that application of knowledge gained through experience and common sense are as much a part of troubleshooting as the use of any chart.

COMPLAINT "C" is Compressor starts but stays on run winding.

How do you know this condition is occurring? If the amps stay higher than normal, or if you don't hear the changeover.

1. through 3. Covered previously (see Complaints "A" and "B").
4. *High head pressure*. Be sure to check all the things listed in the "repair" column.

COMPLAINT "D" is Compressor starts and runs, but short cycles on overload protector.

1. Mentioned before (see Complaint "A").
2. Low voltage to unit (or unbalanced if three-phase). In the matter of three-phase unbalance—this is an instance in which it is probably wise to call in the power company, or check with the building owner to determine what other equipment is on the source of power to cause the unbalance.
3. *Overload protector defective*. Sometimes difficult to determine. One good clue is how it looks—does it appear to have been overheated?
4. and 5. Answered previously (see Complaint "C")
6. *Suction pressure too high*. This will occur more often on refrigeration than air conditioning, especially on low temperature equipment.
7. *Compressor hot—insufficient gas cooling.* Usually a result of a low charge.

Most of the other complaints, causes, and repair suggestions are straightforward, and the best suggestion is to follow the chart.

WARNING: ELECTRICAL POWER MUST BE DISCONNECTED WHEN TERMINAL PROTECTIVE COVER IS NOT IN PLACE TO PROTECT AGAINST ELECTROCUTION OR VENTED TERMINAL.

Troubleshooting and Service Chart

Complaint	Possible Cause	Repair
A. Compressor will not start—no hum.	1. Line disconnect switch open.	1. Close start or disconnect switch.
	2. Fuse removed or blown.	2. Replace fuse.
	3. Overload protector tripped.	3. Refer to electrical section.
	4. Control stuck in open position.	4. Repair or replace control.
	5. Control off due to cold location.	5. Relocate control.
	6. Wiring improper or loose.	6. Checking wiring against diagram.
	7. Defective thermostat.	7. Test thermostat, replace if necessary.

(*continued*)

Copyright Goodheart-Willcox Co., Inc.

Troubleshooting and Service Chart		
Complaint	**Possible Cause**	**Repair**
B. Compressor will not start—hums and trips on overload protector.	1. Improperly wired. 2. Low voltage to unit. 3. Starting capacitor defective. 4. Relay failing to close. 5. Compressor motor has a winding open or shorted. 6. Internal mechanical trouble in compressor. 7. Liquid refrigerant in compressor. 8. Run capacitor defective.	1. Check wiring against diagram. 2. Determine reason and correct. 3. Determine reason and replace. 4. Determine reason and correct, replace if necessary. 5. Replace compressor. 6. Replace compressor. 7. Add crankcase heater and/or accumulator. 8. Replace capacitor.
C. Compressor starts, but does not switch off of start winding.	1. Improperly wired. 2. Low voltage to unit. 3. Relay failing to open. 4. Excessively high discharge pressure. 5. Compressor motor has a winding open or shorted. 6. Internal mechanical trouble in compressor (tight).	1. Check wiring against diagram. 2. Determine reason and correct. 3. Determine reason and correct, replace if necessary. 4. Check discharge shut-off valve, possible overcharge, or insufficient cooling on condenser. 5. Replace compressor. 6. Replace compressor.
D. Compressor starts and runs, but short cycles on overload protector.	1. Additional current passing through overload protector. 2. Low voltage to unit (or unbalanced if three phase). 3. Overload protector defective. 4. Run capacitor defective. 5. Excessive discharge pressure. 6. Suction pressure too high. 7. Compressor too hot—return gas hot. 8. Compressor motor has a winding shorted. 9. High superheat.	1. Check wiring diagram. Check for added fan motors, pumps, etc., connected to wrong side of protector. 2. Determine reason and correct. 3. Check current, replace protector. 4. Determine reason and replace. 5. Check ventilation, restrictions in cooling medium, restrictions in refrigeration system. 6. Check for possibility of misapplication. Use stronger unit. 7. Check refrigerant charge (fix leak), add if necessary. 8. Replace compressor. 9. Check refrigerant charge, add if necessary.
E. Unit runs OK, but short cycles on.	1. Overload protector. 2. Thermostat. 3. High-pressure cut-out due to: a. Insufficient air or water supply. b. Overcharge. c. Air in system. 4. Low-pressure cut-out due to: a. Liquid line solenoid leaking. b. Compressor valve leak. c. Undercharge. d. Restriction in expansion device.	1. See D above. 2. Differential set too close—widen. 3a. Check air or water supply to condenser—correct. b. Reduce refrigerant charge. c. Purge. 4a. Replace. b. Replace. c. Fix leak, add refrigerant. d. Replace device.

(*continued*)

Copyright Goodheart-Willcox Co., Inc.

Troubleshooting and Service Chart		
Complaint	**Possible Cause**	**Repair**
F. Unit operates long or continuously.	1. Shortage of refrigerant.	1. Fix leak, add charge.
	2. Control contacts stuck or frozen closed.	2. Clean contacts or replace control.
	3. Refrigerated or air conditioned space has excessive load or poor insulation.	3. Determine fault and correct.
	4. System inadequate to handle load.	4. Replace with larger system.
	5. Evaporator coil iced.	5. Defrost.
	6. Restriction in refrigeration system.	6. Determine location and remove.
	7. Dirty condenser.	7. Clean condenser.
	8. Filter dirty.	8. Clean or replace.
G. Start capacitor open, shorted, or blown.	1. Relay contacts not operating properly.	1. Clean contacts or replace relay if necessary.
	2. Prolonged operation on start cycle due to:	
	a. Low voltage to unit.	2a. Determine reason and correct.
	b. Improper relay.	b. Replace.
	c. Starting load too high.	c. Correct by using pump down arrangement if necessary.
	3. Excessive short cycling.	3. Determine reason for short cycling (see E above) and correct.
	4. Improper capacitor.	4. Determine correct size and replace.
H. Run capacitor open, shorted, or blown.	1. Improper capacitor.	1. Determine correct size and replace.
	2. Excessively high line voltage (110% of rated-max).	2. Determine reason and correct.
I. Relay defective or burned out.	1. Incorrect relay.	1. Check and replace.
	2. Incorrect mounting angle.	2. Remount relay in correct position.
	3. Line voltage too high or too low.	3. Determine reason and correct.
	4. Excessive short cycling.	4. Determine reason (see E above) and correct.
	5. Relay being influenced by loose vibrating mounting.	5. Remount rigidly.
	6. Incorrect run capacitor.	6. Replace with proper capacitor.
J. Space temperature too high.	1. Control setting too high.	1. Reset control.
	2. Expansion valve too small.	2. Use larger valve.
	3. Cooling coils too small.	3. Add surface or replace.
	4. Inadequate air circulation.	4. Improve air movement.
K. Suction line frosted or sweating.	1. Expansion valve passing excess refrigerant or is oversized.	1. Readjust valve or replace with smaller valve.
	2. Expansion valve stuck open.	2. Clean valve of foreign particles, replace if necessary.
	3. Evaporator fan not running.	3. Determine reason and correct.
	4. Overcharge of refrigerant.	4. Correct charge.
L. Liquid line frosted or sweating.	1. Restriction in dehydrator or strainer.	1. Replace part.
	2. Liquid shut-off (king valve) partially closed.	2. Open valve fully.
M. Unit noisy.	1. Loose parts or mountings.	1. Find and tighten.
	2. Tubing rattle.	2. Reform to be free of contact.
	3. Bent fan blade causing vibration.	3. Replace blade.
	4. Fan motor bearings worn.	4. Replace motor.

Tecumseh Compressor Company

Copyright Goodheart-Willcox Co., Inc.

B.3 Industrial Refrigeration Troubleshooting and Service Chart		
Complaint	**Possible Cause**	**Repair**
A. Compressor will not start.	1. No power to motor.	1a. Check power to and from fuses; replace fuses if necessary.
		1b. Check starter contacts, connections, overloads, and timer (if part winding start). Reset or repair as necessary.
		1c. Check power at motor terminals.
		1d. Repair wiring if damaged.
	2. Control circuit is open.	2a. Safety switches are holding circuit open. Check high pressure, oil failure, and low pressure switches. Also check oil filter pressure differential switch if supplied.
		2b. Thermostat is satisfied.
		2c. Check control circuit fuses if blown; replace.
		2d. Check wiring for open circuit.
B. Motor "hums" but does not start.	1. Low voltage to motor.	1a. Check incoming power for correct voltage. Call power company or inspect/repair power wiring.
	2. Motor shorted.	2a. Check at motor terminals. Repair or replace as necessary.
	3. Single phase failure in the three-phase power supply.	3a. Check power wiring circuit for component or fuse failure.
	4. Compressor is seized due to damage or liquid.	4a. Remove belts or coupling. Manually turn crankshaft to check compressor.
	5. Compressor is not unloaded.	5a. Check unloader system.
C. Compressor starts, but motor cycles off on overloads.	1. Compressor has liquid or oil in cylinders.	1a. Check compressor crankcase temperature.
		1b. Throttle suction stop valve on compressor to clear cylinders and act to prevent recurrence of liquid accumulation.
	2. Suction pressure is too high.	2a. Unload compressor when starting. Use internal unloaders if present.
		2b. Install external by-pass unloader.
	3. Motor control.	3a. Motor control located in hot ambient.
		3b. Low power voltage.
		3c. Motor overloads may be defective or weak.
		3d. Check motor control relay.
		3e. Adjust circuit breaker setting to full load amps.
	4. Bearings are "tight".	4a. Check motor and compressor bearings for temperature. Lubricate motor bearings.
	5. Motor is running on single phase power.	5a. Check power lines, fuses, starter, motor, etc., to determine where open circuit has occurred.
D. Compressor starts but short cycles automatically.	1. Low refrigerant charge.	1a. Check and add if necessary.
	2. Driers plugged or saturated with moisture.	2a. Replace cores.
	3. Refrigerant feed control is defective.	3a. Repair or replace.
	4. No load.	4a. To prevent short cycling, if objectionable, install pump-down circuit, anti-recycle timer or false load system.
	5. Unit is too large for load.	5a. Reduce compressor speed.
		5b. Install false load system.
	6. Suction strainer blocked or restricted.	6a. Check and clean or replace as necessary.

(*continued*)

Copyright Goodheart-Willcox Co., Inc.

B.3 Industrial Refrigeration Troubleshooting and Service Chart		
Complaint	**Possible Cause**	**Repair**
E. Motor is noisy or erratic.	1. Motor bearing failure or winding failure.	1a. Check and repair as needed.
	2. If electronic start, check calibration on control elements.	2a. Adjust as necessary.
F. Compressor runs continuously but does not keep up with the load.	1. Load is too high.	1a. Speed up compressor or add compressor capacity.
		1b. Reduce load.
	2. Refrigerant metering device is underfeeding, causing the compressor to run at too low a suction pressure.	2a. Check and repair liquid feed problems.
		2b. Check discharge pressure and increase if low.
	3. Faulty control circuit, may be low pressure control or capacity controls.	3a. Check and repair.
	4. Compressor may have broken valve plates.	4a. Check compressor for condition of parts. This condition can usually be detected by checking compressor discharge temperature.
	5. Thermostat control is defective and keeps unit running.	5a. Check temperatures of product or space and compare with thermostat control. Replace or readjust thermostat.
	6. Defrost system on evaporator not working properly.	6a. Check and repair as needed.
	7. Suction bags in strainers are dirty and restrict gas flow.	7a. Clean or remove.
	8. Hot-gas bypass or false load valve stuck.	8a. Check and repair or replace.
G. Compressor loses excessive amount of oil.	1. High suction superheat causes oil to vaporize.	1a. Insulate suction lines.
		1b. Adjust expansion valves to proper superheat.
		1c. Install liquid injection (suction line desuperheating).
	2. Too low of an operating level in chiller will keep oil in vessel.	2a. Raise liquid level in flooded evaporator (R-12 systems only).
	3. Oil not returning from separator.	3a. Make sure all valves are open.
		3b. Check float mechanism and clean orifice.
		3c. Check and clean return line.
	4. Oil separator is too small.	4a. Check selection.
	5. Broken valves cause excessive heat in compressor and vaporization of oil.	5a. Repair compressor.
	6. "Slugging" of compressor with liquid refrigerant that causes excessive foam in the crankcase.	6a. "Dry up" suction gas to compressor by repairing evaporator.
		6b. Refrigerant feed controls are overfeeding.
		6c. Check suction trap level controls.
		6d. Install a refrigerant liquid transfer system to return liquid to high side.
	7. System has a leak.	7a. Locate and fix leak.

(*continued*)

Copyright Goodheart-Willcox Co., Inc.

B.3 Industrial Refrigeration Troubleshooting and Service Chart		
Complaint	**Possible Cause**	**Repair**
H. Noisy compressor operation.	1. Loose flywheel or coupling.	1a. Tighten.
	2. Coupling not properly aligned.	2a. Check and align if required.
	3. Loose belts.	3a. Align and tighten per specs.
		3b. Check sheeve grooves.
	4. Poor foundation or mounting.	4a. Tighten mounting bolts, grout base, or install heavier foundation.
	5. Check compressor with stethoscope if noise is internal.	5a. Open, inspect, and repair as necessary.
	6. Check for liquid or oil slugging.	6a. Eliminate liquid from suction mains.
		6b. Check crankcase oil level.
I. Low evaporator capacity.	1. Inadequate refrigerant feed to evaporators.	1a. Clean strainers and driers.
		1b. Check expansion valve superheat setting.
		1c. Check for excessive pressure drop due to change in elevation, too small of lines (suction and liquid lines). A heat exchanger may correct this.
		1d. Check expansion valve size.
	2. Expansion valve bulb in a trap.	2a. Change piping or bulb location to correct.
	3. Oil in evaporator.	3a. Warm the evaporator, drain oil, and install an oil trap to collect oil.
	4. Evaporator surface fouled.	4a. Clean.
	5. Air or product velocity is too low.	5a. Increase to rated velocity.
		5b. Coils not properly defrosting.
		5c. Check defrost time.
		5d. Check method of defrost.
	6. Brine flow through evaporator may be restricted.	6a. Chiller may be fouled or plugged.
		6b. Check circulating pumps.
		6c. Check process piping for restriction.
	7. Wrong refrigerant for system.	7a. Retrofit system with proper refrigerant.
J. Discharge pressure too high.	1. Air in condenser.	1a. Purge noncondensables.
	2. Condenser tubes fouled.	2a. Clean.
	3. Water flow is inadequate.	3a. Check water supply and pump.
		3b. Check control valve.
		3c. Check water temperature.
	4. Airflow is restricted.	4a. Check and clean:
		a. Coils
		b. Eliminators
		c. Dampers
	5. Liquid refrigerant backed up in condenser.	5a. Find source of restriction and clear.
		5b. If system is overcharged, remove refrigerant as required.
		5c. Check to make sure equalizer (vent) line is properly installed and sized.
	6. Spray nozzles on evaporator condensers plugged.	6a. Clean.

(*continued*)

Copyright Goodheart-Willcox Co., Inc.

B.3 Industrial Refrigeration Troubleshooting and Service Chart		
Complaint	**Possible Cause**	**Repair**
K. Discharge pressure too low.	1. Ambient air is too cold.	1a. Install a fan cycling control system.
	2. Water quantity not being regulated properly through condenser.	2a. Install or repair water regulating valve.
	3. Refrigerant level low.	3a. Check for liquid seal, add refrigerant if necessary.
	4. Evaporator condenser fan and water switches are improperly set.	4a. Reset condenser controls.
L. Suction pressure too low.	1. Light load condition.	1a. Shut off some compressors.
		1b. Unload compressors.
		1c. Slow down RPM of compressor.
		1d. Check process flows.
	2. Short of refrigerant.	2a. Add if necessary.
	3. Evaporators not getting enough refrigerant.	3a. Discharge pressure too low. Increase to maintain adequate refrigerant flow.
		3b. Check liquid feed lines for adequate refrigerant supply.
		3c. Check liquid line driers.
	4. Refrigerant metering controls are too small.	4a. Check superheat or liquid level and correct as indicated.
M. Suction pressure too high.	1. Low compressor capacity.	1a. Check compressors for possible internal damage.
		1b. Check system load.
		1c. Add more compressor capacity.
	2. Refrigerant charge too high.	2a. Check refrigerant charge, remove if necessary.

Vilter Manufacturing Corporation

Copyright Goodheart-Willcox Co., Inc.

B.4 Flake Ice Machine Troubleshooting and Service Chart

SEQUENCE OF OPERATION

1. At start-up all thermostats are warm, electric power flows from fuse through Bin Thermostat directly to the compressor (through High- and Low-Pressure Cut-Outs as applicable) and through the warm side of the Gear Thermostat to the Gearmotor (and in parallel to the Green light).

   1a. Original pull down of Flaker may be slow, 5 to 10 minutes before ice is produced. During the last half of pull down, the suction line at the compressor will be frosted, and the sight glass will show bubbles during pull down. After ice starts to be produced, frost will leave the compressor suction line and within 5 minutes the sight glass will show clear or only a small bubble in the top, which will disappear slowly.

2. As ice begins to form, the suction line from the evaporator (location of Gear Thermostat cap tube) gets cold enough (below 32°) to trip Gear Thermostat to the cold side bypassing the Bin Thermostat (resetting for later Ice Unloading period) so power flows directly through Gear Thermostat to the Gearmotor (and Green light); no change is apparent.

   A. [On rare occasions with some particle-free waters, the water will subcool substantially below freezing, then suddenly crystallize and stall the Gearmotor (designed to withstand a stall). The evaporator will continue to get colder until the bottom (location of the Defrost Thermostat cap tube) gets below freezing, tripping the Defrost Thermostat cold, sending power to the Defrost Valve (and Red light) which sends hot refrigerant through the evaporator, releasing the Auger and Gearmotor until the bottom of the evaporator reaches about 45°, tripping the Defrost Thermostat open, and normal refrigeration restarts. Since subcooling with crystallization occurs only 2 or 3 times out of 100, it is unlikely to happen and very unlikely to repeat.]

3. During ice formation, ice is drawn to the top of the evaporator, lowering the water level, opening the float valve. When water flow is seen, it indicates ice formation even before ice appears in the bin coming from the ice tube. Water flows through the bottom of the auger and from a hole near the bottom flight into the ice chamber, cools to 32°, then freezes in thin layers on the wall of the evaporator cylinder where the auger flights remove it and spiral it upward. The ice thickens until it is a fairly dense mass as it rotates under the helical path of the deflector until it is forced into the discharge spout by the deflector. The ice then flows by gravity through the ice tube to give it velocity which spreads it in the bin.

4. When ice piles over about half the length of the 1/4″ stainless tube which holds the Bin Thermostat cap tube, the thermostat opens, shutting off power to the compressor. (Turning on the Yellow light which is connected in parallel with the thermostat). The Green light stays on as the Gear Thermostat is still cold supplying power from the fuse to the Gearmotor (and Green light) to Unload Ice from the evaporator until the freezing surface is above 32°. The Gearmotor must remain on a couple minutes to complete unloading and usually stays on 5 to 15 minutes until the suction line out of the evaporator warms to 45°. Then the Gear Thermostat trips warm, connecting the Gearmotor to the output side of the Bin Thermostat (resetting for the next start-up) shutting off the Gearmotor and Green light.

5. When the bin is full, only the Yellow light is illuminated indicating power is on and fuse okay. Only a trickle of power is used through Yellow neon-type light during flaker-off periods. Flaker may start up while a small amount of ice is still on the 1/4″ stainless steel tube. This is okay as the deflector can push ice through the ice tube creating some spread around the top of the bin until the stainless steel tube is fairly well covered again.

Flaker Refrigeration Schematic

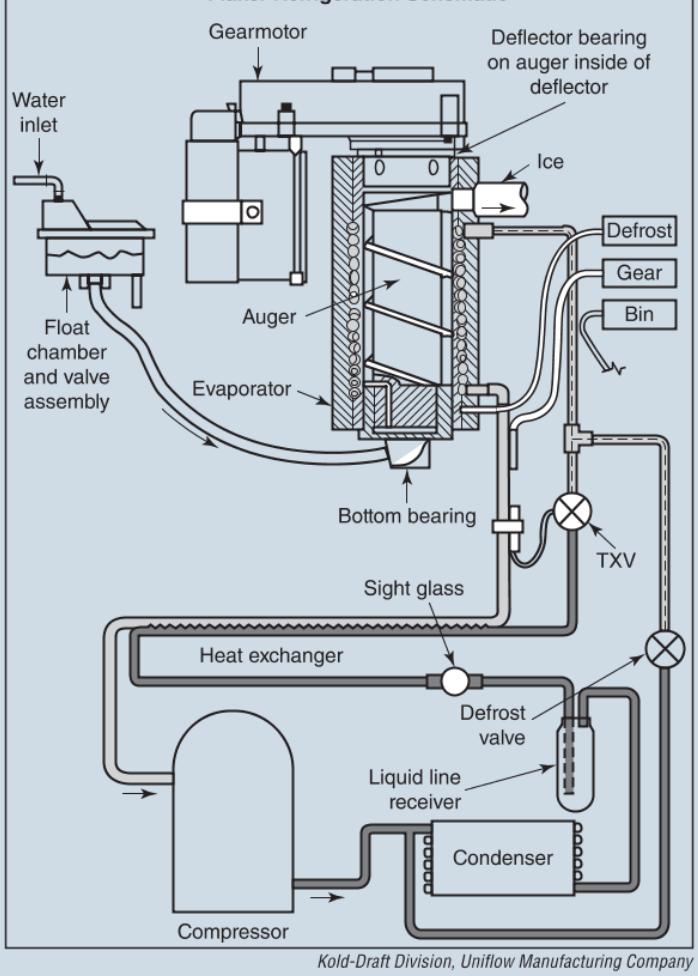

Kold-Draft Division, Uniflow Manufacturing Company

(*continued*)

Copyright Goodheart-Willcox Co., Inc.

B.4 Flake Ice Machine Troubleshooting and Service Chart		
Trouble	**Cause**	**Remedy**
A. Flaker will not operate. No lights on in control box.	1. Line fuse blown. 2. Loose connection in control box or in power supply line.	1. Check circuits for short or ground. Replace fuse. 2. Check for power supply at controls in control box. Check connections to bin thermostat.
B. Flaker will not operate. Yellow light on, but no ice on bin thermostat.	1. Bin control set too warm in a cold room between 45° and 55°. 2. Room below 45°. 3. Bin control has lost charge.	1. Set bin thermostat colder (cw) but recheck with ice to be sure it will shut off. 2. Add heat to the room. 3. Replace bin control.
C. Condensing fan and gearmotor operate (green light on) but not the compressor.	1. Inoperative capacitors or relay. 2. Overload switch defective. 3. Loose connections or defective compressor.	1. Replace capacitors or relay. 2. Replace overload switch. 3. Check for power at compressor C-R terminals, C-S terminals. With power off, remove C connection, check ohms between C and R, also C and S.
D. Water-cooled flaker: gearmotor operates (green light on) but not the condensing fan or compressor.	1. High-pressure cut-out open; inadequate water supply. 2. Water supply okay, high-pressure cut-out won't close with condenser cool.	1. Check water supply and condenser water valve. 2. Replace defective high-pressure cut-out.
E. Compressor operating but fan off.	1. Circuit not complete. 2. Fan motor burned out.	1. Check circuit. 2. Replace motor.
F. Condenser fan operating but compressor unit operating intermittently.	1. Dirty condenser coil. 2. High or low voltage. 3. Excessive refrigerant. 4. Worn compressor.	1. Clean coil. 2. Correct to proper voltage within 10% of nameplate. 3. Remove some refrigerant, check sight glass. 4. Replace compressor.
G. Intermittent defrost, red light cycling on and off. Water level normal in float tank.	1. Water line elbow in bottom bearing in too far. 2. Defrost thermostat misadjusted, very cold supply water. 3. TXV too far open. 4. Deflector partially closed. 5. Gearmotor not running. 6. Gearmotor stalled with power on, bottom evaporator mounting screw too tight. 7. Gearmotor stalled.	1. Back out elbow 1 turn. 2. See service manual for defrost thermostat setting. Also see Abnormal Defrost Thermostat Setting in the manual. 3. Close TXV 1/4 turn, see service manual for proper setting. 4. See service manual for correct deflector setting. 5. Check power to gearmotor receptacle in bottom of control box. 6. Back off evaporator mounting screw 1 turn to see if gearmotor will operate after it cools down sufficiently for overload to cut back in. Also see #7. 7. Remove gearmotor and auger assembly and check for operation on workbench (take care not to damage auger flights). Remove bottom bearing, check for condition and check for snug but not a tight fit on bottom of auger. Check clearance between top of auger and bottom of deflector (see Flaker Mechanism Assem. Instr. #5).

(*continued*)

Copyright Goodheart-Willcox Co., Inc.

B.4 Flake Ice Machine Troubleshooting and Service Chart		
Trouble	**Cause**	**Remedy**
H. Wet ice.	1. High water level. 2. Undercharge, bubble going through sight glass. 3. Misadjusted TXV.	1. Lower water level. 2. Check for leaks, add refrigerant. 3. Adjust TXV (see "Expansion Valve Adjustment").
I. Ice too hard.	1. Low water level. 2. Deflector incorrectly adjusted. 3. TXV closed much too far. 4. Moisture in system and TXV partially frozen shut.	1. Raise water level. 2. See deflector adjustments procedure. 3. See service manual for proper suction pressure and suction line temperature. 4. Dehydrate and recharge system.
J. No ice with gearmotor, compressor and condenser fan operating. (Red light not on, no power to defrost valve.)	1. Very low refrigerant. 2. Stuck defrost valve, defrost line warm, suction pressure above 20 pounds.	1. Repair leak, see service manual for proper charge. 2. Repair or replace defrost valve.
K. Flaker does not turn off.	1. Misadjusted bin thermostat. 2. Bin thermostat will not open when set warmest with ice on the thermostat cap tube. 3. Mislocated bin thermostat cap tube.	1. Adjust bin thermostat (ccw), check with ice on coil. 2. Replace bin thermostat. 3. Check location of 1/4″ stainless cap tube holder parallel and below ice path coming from ice tube. Check thermostat cap tube located in the 1/4″ stainless tube.
L. Flaker cycles off and on.	1. Ice falling on bin thermostat capillary tube. 2. Ice tube not on outlet spout.	1. Relocate tube. 2. Remount ice tube and check for restriction.
M. Low production.	1. High head pressure. 2. Inadequate water supply. 3. TXV misadjusted. 4. High ambient. 5. Deflector closed. 6. Low head pressure.	1a. Clean condenser. Improve water supply to water-cooled condenser. Improve ventilation. 1b. Replace head pressure control valve on remote condenser models. 2. Check and clean filters. Raise water level. 3. Adjust TXV. 4. Decrease ambient to 90°F. Max. 5. See deflector adjustments procedure. 6a. Adjust water regulating valve. 6b. Add refrigerant to remote condenser models. 6c. Refer to Remote Condenser section of Service Manual.
N. Flaker spouts coming off.	1. ID of discharge tubing too small. 2. Roll pins breaking on deflector. 3. Hose kinking.	1. Change to braided nylon tubing. 2. Readjust defrost thermostat. 3. Change to braided nylon tubing, reroute presently used tubing.

Kold-Draft Division, Uniflow Manufacturing Company

Copyright Goodheart-Willcox Co., Inc.

Appendix C: Refrigerants

C.1 Critical Temperatures of Refrigerants	
Refrigerant	**Critical Temperature**
R-11	388°F (198°C)
R-12	233.5°F (112°C)
R-22	205.1°F (96°C)
R-123	362.6°F (183.7°C)
R-134a	213.9°F (101°C)
R-290	206.1°F (96.7°C)
R-401A	221°F (105.3°C)
R-404A	161.7°F (72.1°C)
R-407C	188.1°F (86.7°C)
R-410A	161.8°F (72.1°C)
R-500	215.8°F (102°C)
R-502	177.3°F (80.7°C)
R-507A	159.1°F (70.6°C)
R-508B	57.2°F (14°C)
R-600a	274.5°F (134.7°C)
R-717	270.3°F (132.4°C)
R-744	87.9°F (31.0°C)

Copyright Goodheart-Willcox Co., Inc.

Copyright Goodheart-Willcox Co., Inc.

C.2 Characteristics of Little-Used Refrigerants

Properties of refrigerants that are no longer commonly used are listed in the following table. Their physical properties and uses as refrigerants also are explained in the ASHRAE Handbook of Fundamentals.

Refrigerant	Chemical Symbol	Molecular Weight	Odor	Toxicity	Flammability	Pressure psia at 5° F	Pressure psia at 86° F	Latent Heat at 5° F	Sp. Heat of Liquid at 5° F	Critical Temp.	Critical Pressure psia	Sp. Volume of Gas at 5° F	Density of Liquid at 5° (lb/ft³)	CP/CV Ratio	Sp. Heat of Vapor at 86° F
R-764 (Sulfur Dioxide)	SO_2	64.06	Pungent	High	Non	11.81	66.45	172.3	.34	314.8	1141.5	6.421	92	1.256 (70°F)	.34
R-40 Methyl Choride	CH_3Cl	50.489	Sweet	Med.	Slight	20.89	95.53	180.6	.45	289.6	969.2	4.530	61	1.20	.4
R-160 Ethyl Chloride	C_2H_5Cl	64.51	Etheral	Med.	Yes	4.65	27.10	177	.47	369	764	17.55	59.00	1.13	.42
R-13	$CClF_3$	104.46	Sweet	Low	Non	…	…	63.85 (–115°F)	.247 (–22°F)	84	561	.431 (–115°F)	77 (0°F)	1.172	…
R-744 Carbon Dioxide	CO_2	44.005	Non	Low	Non	334.4	1039.0	116	.5	87.8	1066.2	.2673	61.22	1.30 (32°F)	1.95
R-611 Methyl Formate	$C_2H_3O_2$	60.04	Slight	…	Slight	1.96	13.69	236	.515	417	870	46.7	…	…	.515
R-30 Methylene Chloride	CH_2Cl_2	84.9	Sweet	…	Yes	1.17	10.6	162.1	.34	421	670	50.58	…	…	.34
R-21	$CHCl_2F$	102.92	Sweet	Low	Non	5.5	30.5	105.5	.26	353.3	750.0	8.83	90.1	…	.26
R-114	$CClF_2CClF_2$	170.93	Sweet	Low	Non	…	…	58.9	.238	294	474	.488	73.1	1.088	.160
R-113	$C_2Cl_3F_3$	187.4	Sweet	Low	Non	.98	7.86	70.62	.199	417.4	495	27.04	103	…	.26
R-290 Propane	C_3H_8	44.06	Sweet	Low	Yes	41.9	155	170.2	.56	302	661.5	2.48	34.33	…	.55
R-170 Ethane	C_2H_6	30.04	Sweet	Low	Yes	236.0	675.0	150.5	.66	90.1	730	.533	26.96	…	.83
R-600 Butane	C_4H_{10}	58.12	Sweet	Low	Yes	8.2	41.6	170.7	.51	308	529	9.98	38.41	…	.51
R-13B1 Kulene 131	CF_3Br	…	Etheral	Low	Non	77.93	261.8	44.88	.182	1535	587	.3854	112	…	.10
R-115 Monochloropenta-fluoroethane	$CClF_2CF_3$	154.48	Sweet	Low	Non	38	148.9	…	…	175.9	…	.82	…	3.76	…

C.3 R-22 Pressure-Enthalpy Diagram

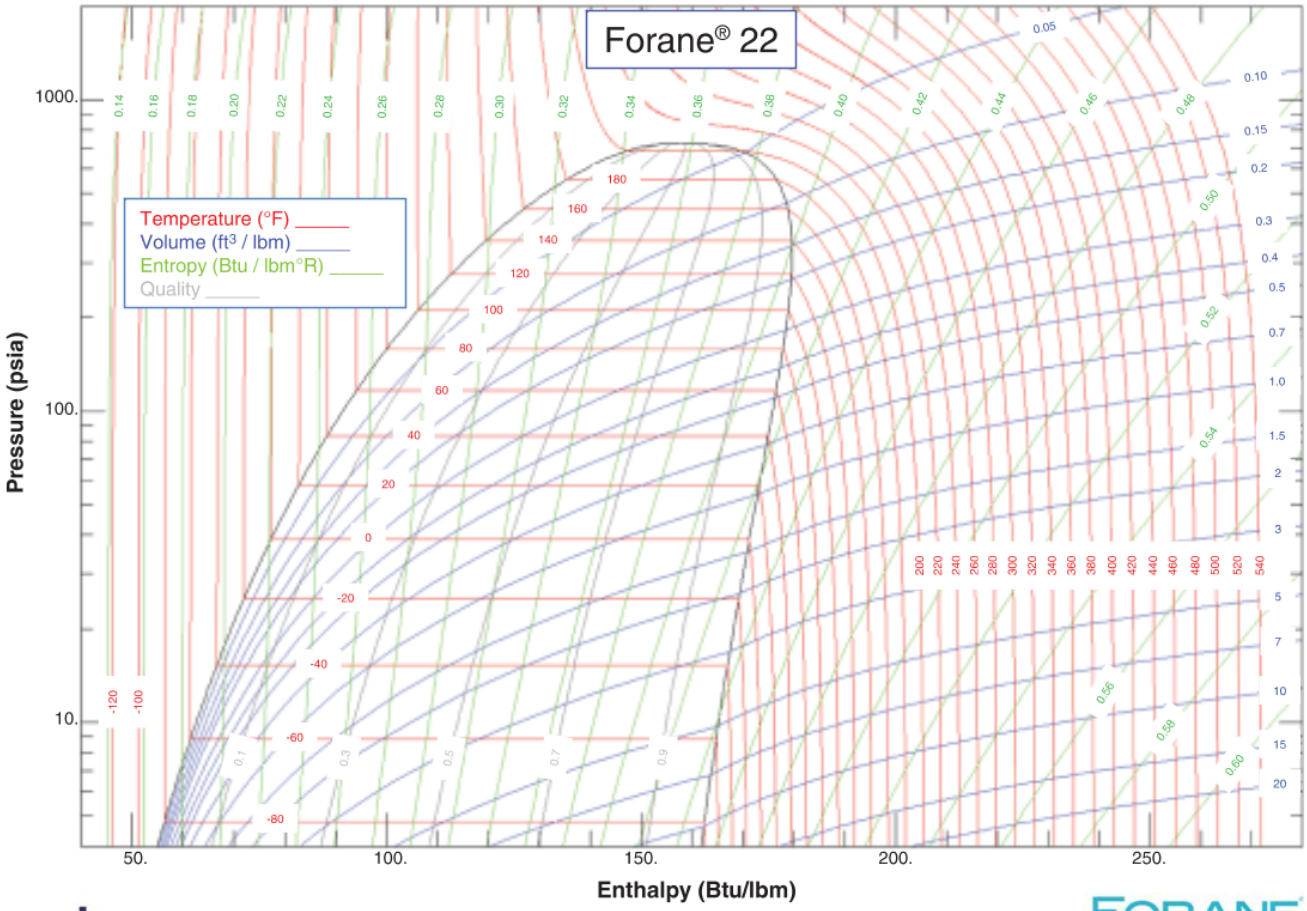

ARKEMA INNOVATIVE CHEMISTRY

This plot was generated using the NIST REFPROP Database (Lemmon, E.W., Huber, M.L., McLinden, M.O.NIST Standard Reference Database 23:Reference Fluid Thermodynamic and Transport Properties-REFPROP, Version 9.0, National Institute of Standards and Technlogy, Standard Reference Data Program, Gaithersburg, 2010) Reference State -IIR

FORANE REFRIGERANTS BY ARKEMA

Arkema, Inc.

C.4 R-22 Thermodynamic Properties

Temperature (°F)	Pressure (psia)	Vapor Volume (ft³/lb)	Liquid Density (lb/ft³)	Enthalpy (Btu/lb)	
				Liquid	Vapor
–40	15.3	3.287	87.82	0.000	100.3
–30	19.6	2.598	86.80	2.620	101.4
–20	24.9	2.078	85.76	5.260	102.5
–10	31.2	1.679	84.71	7.923	103.6
0	38.7	1.370	83.63	10.61	104.6
10	47.5	1.128	82.52	13.33	105.6
20	57.8	0.935	81.39	16.07	106.5
30	69.7	0.782	80.24	18.85	107.4
40	83.3	0.657	79.05	21.66	108.3
50	98.8	0.556	77.83	24.51	109.1
60	116.3	0.473	76.57	27.41	109.9
70	136.1	0.404	75.27	30.35	110.6
80	158.3	0.346	73.92	33.34	111.2
90	183.1	0.298	72.52	36.39	111.8
100	210.6	0.257	71.06	39.50	112.3
110	241.1	0.222	69.52	42.69	112.7
120	274.7	0.192	67.90	45.95	112.9
130	311.6	0.166	66.18	49.32	113.0
140	352.1	0.144	64.32	52.80	113.0
150	396.4	0.124	62.31	56.42	112.8

Copyright Goodheart-Willcox Co., Inc.

C.5 R-123 Pressure-Enthalpy Diagram

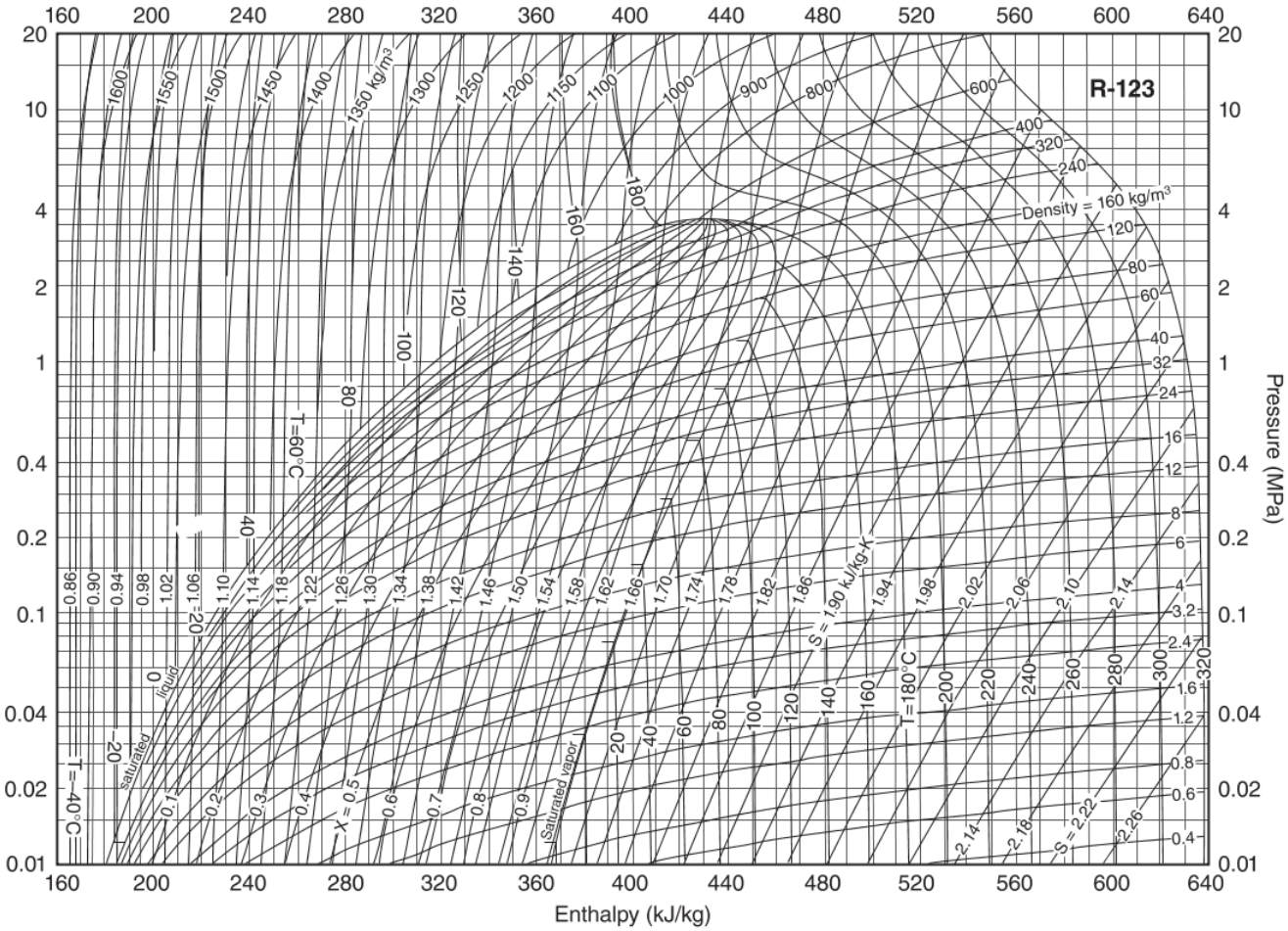

Prepared by Center for Applied Thermodynamic Studies, University of Idaho. Copyright 1992 American Society of Heating, Refrigerating, and Air-Conditioning Engineers

C.6 R-123 Thermodynamic Properties

Temperature (°F)	Pressure (psia)	Vapor Volume (ft³/lb)	Liquid Density (lb/ft³)	Enthalpy (Btu/lb)	
				Liquid	Vapor
–20	1.0	28.3286	99.54	4.558	87.35
–10	1.4	21.1416	98.73	6.857	88.75
0	2.0	16.0000	97.92	9.170	90.16
10	2.6	12.2549	97.10	11.50	91.58
20	3.5	9.5147	96.28	13.84	93.01
30	4.5	7.4627	95.44	16.20	94.44
40	5.8	5.9207	94.60	18.57	95.88
50	7.3	4.7461	93.74	20.96	97.32
60	9.2	3.8388	92.88	23.36	98.76
70	11.4	3.1328	92.01	25.78	100.2
80	14.1	2.5780	91.12	28.22	101.6
90	17.2	2.1381	90.22	30.67	103.1
100	20.8	1.7857	89.31	33.14	104.5
110	25.0	1.5017	88.39	35.63	106.0
120	29.8	1.2708	87.45	38.13	107.4
130	35.3	1.0817	86.50	40.66	108.8
140	41.5	0.9255	85.52	43.20	110.2
150	48.5	0.7959	84.53	45.76	111.6

Copyright Goodheart-Willcox Co., Inc.

C.7 R-401A Pressure-Enthalpy Diagram

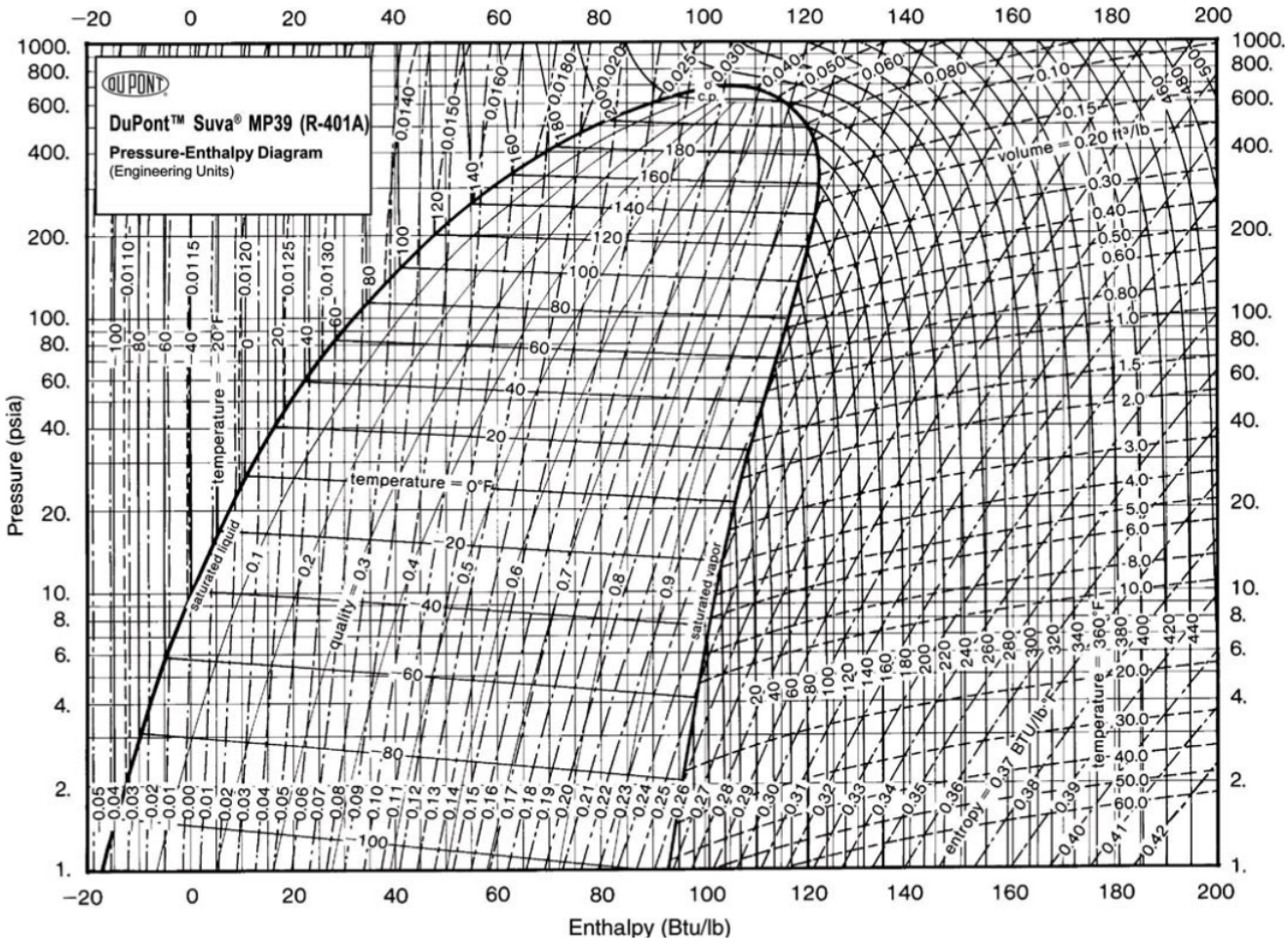

DuPont Company

C.8 R-401A Thermodynamic Properties

Temperature (°F)	Pressure (psia)		Vapor Volume (ft^3/lb)	Liquid Density (lb/ft^3)	Enthalpy (Btu/lb)	
	Liquid	Vapor			Liquid	Vapor
−40	11.4	8.6	6.0496	86.29	0.000	97.59
−30	14.7	11.3	4.6685	85.33	2.714	98.91
−20	18.7	14.7	3.6496	84.36	5.449	100.2
−10	23.6	18.8	2.8885	83.37	8.207	101.5
0	29.4	23.8	2.3121	82.36	10.99	102.8
10	36.2	29.7	1.8702	81.33	13.80	104.0
20	44.2	36.7	1.5270	80.27	16.64	105.2
30	53.5	45.0	1.2571	79.20	19.51	106.4
40	64.2	54.6	1.0425	78.10	22.41	107.6
50	76.4	65.6	0.8712	76.97	25.35	108.7
60	90.2	78.3	0.7324	75.81	28.33	109.8
70	105.9	92.8	0.6190	74.61	31.35	110.9
80	123.5	109.2	0.5257	73.37	34.41	111.9
90	143.2	127.6	0.4482	72.09	37.52	112.8
100	165.2	148.3	0.3836	70.76	40.69	113.7
110	189.5	171.4	0.3292	69.38	43.92	114.5
120	216.3	197.1	0.2832	67.93	47.21	115.2
130	245.8	225.6	0.2440	66.40	50.58	115.9
140	278.2	257.1	0.2104	64.77	54.04	116.4
150	313.6	291.7	0.1814	63.04	57.61	116.8

Copyright Goodheart-Willcox Co., Inc.

C.9 R-404A Pressure-Enthalpy Diagram

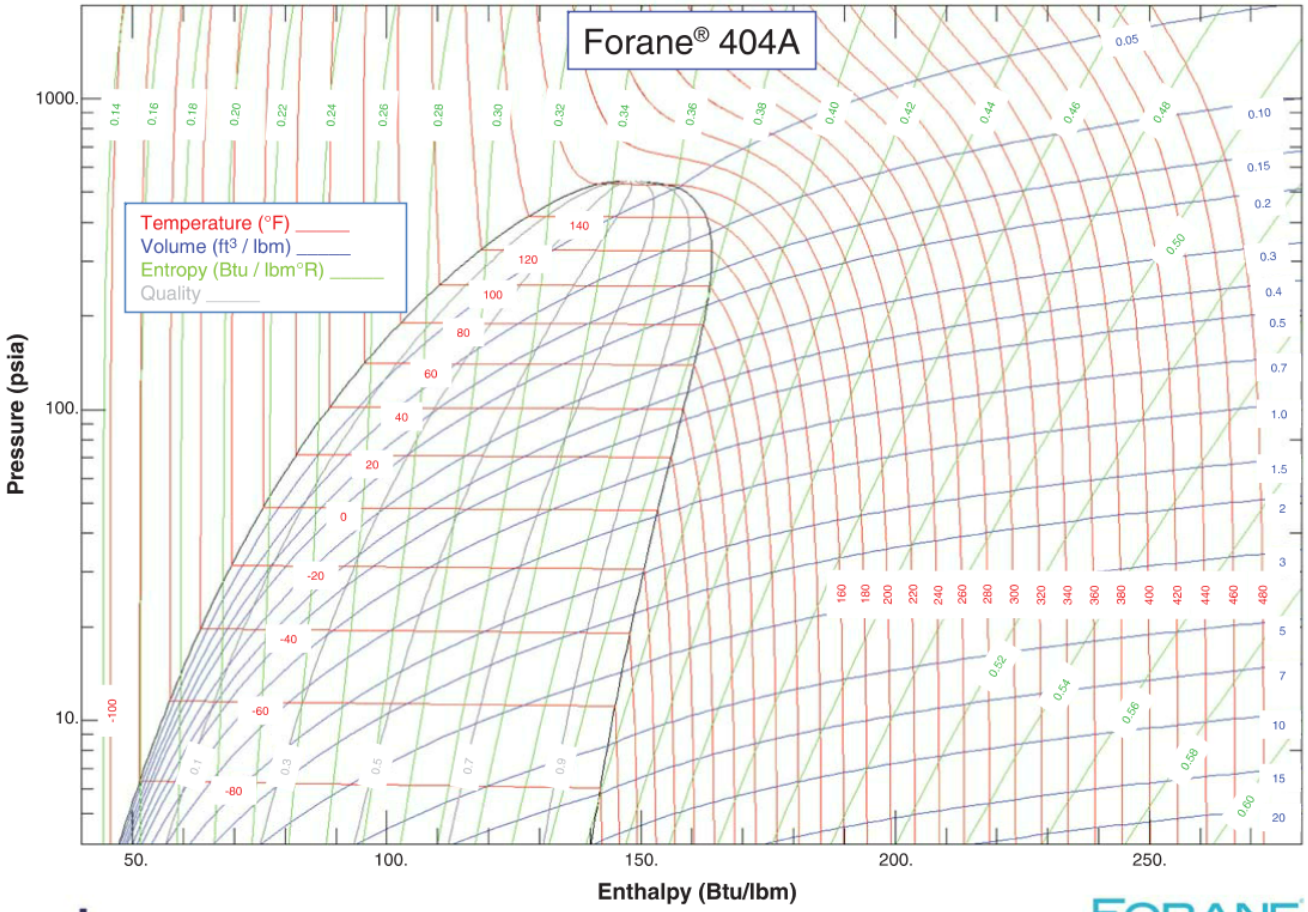

ARKEMA INNOVATIVE CHEMISTRY

This plot was generated using the NIST REFPROP Database (Lemmon, E.W., Huber, M.L., McLinden, M.O.NIST Standard Reference Database 23:Reference Fluid Thermodynamic and Transport Properties-REFPROP, Version 9.0, National Institute of Standards and Technlogy, Standard Reference Data Program, Gaithersburg, 2010) Reference State -IIR

FORANE® REFRIGERANTS BY ARKEMA

Arkema, Inc.

C.10 R-404A Thermodynamic Properties

Temperature (°F)	Pressure (psia)		Vapor Volume (ft³/lb)	Liquid Density (lb/ft³)	Enthalpy (Btu/lb)	
	Liquid	Vapor			Liquid	Vapor
–40	19.9	19.3	2.2962	80.40	0.000	84.08
–30	25.4	24.6	1.8222	79.31	3.007	85.50
–20	31.9	31.0	1.4626	78.19	6.051	86.90
–10	39.7	38.7	1.1864	77.05	9.133	88.28
0	48.8	47.7	0.9705	75.87	12.26	89.62
10	59.5	58.3	0.7999	74.66	15.43	90.94
20	71.9	70.5	0.6637	73.42	18.64	92.21
30	86.1	84.6	0.5540	72.13	21.91	93.44
40	102.3	100.7	0.4647	70.79	25.24	94.62
50	120.7	118.9	0.3915	69.39	28.62	95.74
60	141.4	139.6	0.3309	67.93	32.08	96.80
70	164.7	162.8	0.2804	66.38	35.62	97.76
80	190.8	188.8	0.2381	64.75	39.24	98.63
90	219.9	217.7	0.2022	62.99	42.97	99.39
100	252.1	249.9	0.1716	61.10	46.81	100.0
110	287.8	285.5	0.1454	59.03	50.81	100.4
120	327.2	324.9	0.1225	56.73	54.99	100.6
130	370.6	368.4	0.1025	54.08	59.43	100.4
140	418.5	416.4	0.0844	50.92	64.26	99.60

Copyright Goodheart-Willcox Co., Inc.

C.11 R-407C Pressure-Enthalpy Diagram

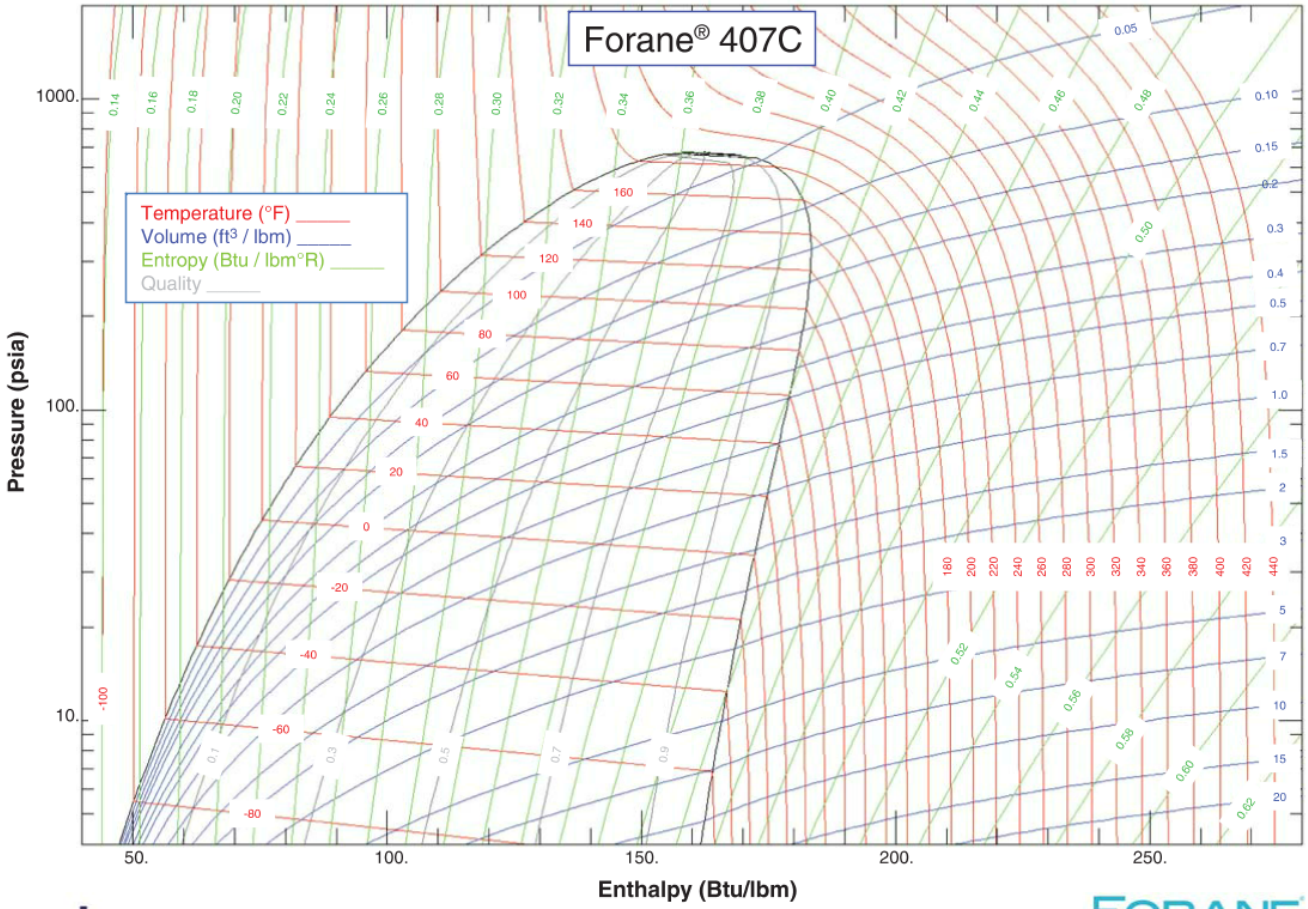

ARKEMA INNOVATIVE CHEMISTRY

This plot was generated using the NIST REFPROP Database (Lemmon, E.W., Huber, M.L., McLinden, M.O.NIST Standard Reference Database 23:Reference Fluid Thermodynamic and Transport Properties-REFPROP, Version 9.0, National Institute of Standards and Technlogy, Standard Reference Data Program, Gaithersburg, 2010) Reference State -IIR

FORANE REFRIGERANTS BY ARKEMA

Arkema, Inc.

C.12 R-407C Thermodynamic Properties

Temperature (°F)	Pressure (psia)		Vapor Volume (ft³/lb)	Liquid Density (lb/ft³)	Enthalpy (Btu/lb)	
	Liquid	Vapor			Liquid	Vapor
–40	17.6	12.5	4.1288	85.55	0.000	103.7
–30	22.6	16.4	3.2051	84.46	3.134	105.1
–20	28.6	21.2	2.5195	83.36	6.296	106.5
–10	35.8	27.1	2.0036	82.23	9.488	107.9
0	44.3	34.2	1.6098	81.08	12.71	109.2
10	54.3	42.7	1.3053	79.90	15.97	110.5
20	66.0	52.6	1.0674	78.70	19.27	111.7
30	79.4	64.3	0.8792	77.46	22.62	112.9
40	94.9	77.9	0.7291	76.18	26.00	114.1
50	112.5	93.5	0.6082	74.85	29.44	115.1
60	132.4	111.5	0.5099	73.48	32.94	116.2
70	154.9	131.9	0.4294	72.06	36.49	117.1
80	180.2	155.1	0.3629	70.57	40.12	118.0
90	208.3	181.2	0.3076	69.00	43.82	118.8
100	239.6	210.5	0.2612	67.35	47.62	119.4
110	274.3	243.4	0.2220	65.59	51.52	120.0
120	312.5	280.0	0.1887	63.70	55.54	120.3
130	354.6	320.8	0.1602	61.65	59.71	120.5
140	400.7	366.1	0.1355	59.39	64.06	120.4

Copyright Goodheart-Willcox Co., Inc.

C.13 R-410A Pressure-Enthalpy Diagram

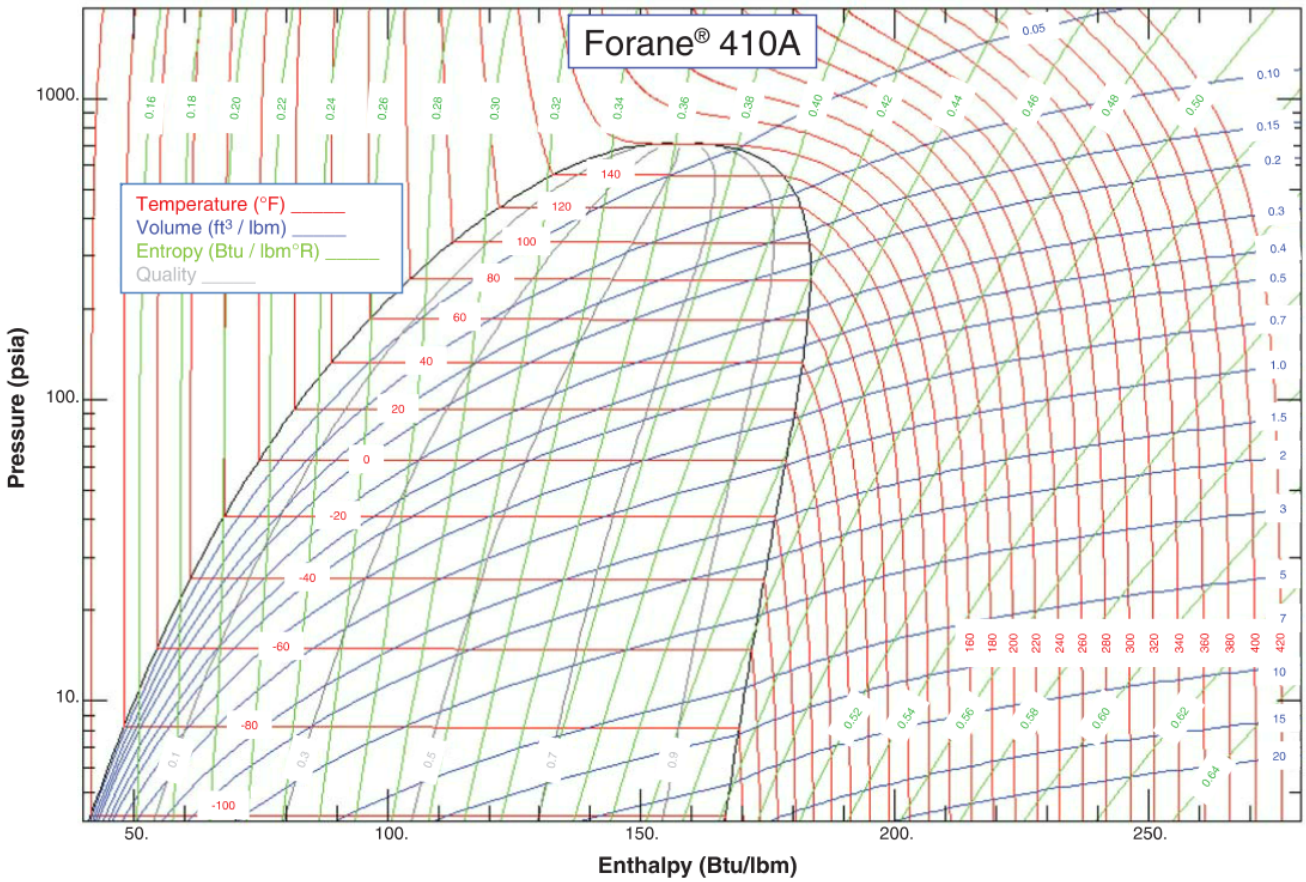

ARKEMA INNOVATIVE CHEMISTRY

This plot was generated using the NIST REFPROP Database (Lemmon, E.W., Huber, M.L., McLinden, M.O.NIST Standard Reference Database 23:Reference Fluid Thermodynamic and Transport Properties-REFPROP, Version 9.0, National Institute of Standards and Technlogy, Standard Reference Data Program, Gaithersburg, 2010) Reference State -IIR

FORANE REFRIGERANTS BY ARKEMA

Arkema, Inc.

C.14 R-410A Thermodynamic Properties						
Temperature (°F)	Pressure (psia)		Vapor Volume (ft³/lb)	Liquid Density (lb/ft³)	Enthalpy (Btu/lb)	
	Liquid	Vapor			Liquid	Vapor
–40	25.6	25.5	0.4398	82.02	0.000	112.5
–30	32.6	32.6	1.8030	80.88	3.303	113.7
–20	41.1	41.0	1.4452	79.71	6.640	114.8
–10	51.2	51.1	1.1695	78.51	10.01	115.9
0	63.1	63.0	0.9546	77.29	13.42	116.9
10	77.1	76.9	0.7852	76.03	16.88	117.9
20	93.2	93.0	0.6503	74.73	20.39	118.8
30	111.9	111.5	0.5417	73.38	23.95	119.6
40	133.2	132.8	0.4537	71.99	27.58	120.3
50	157.4	156.9	0.3816	70.53	31.27	120.9
60	184.8	184.3	0.3221	69.01	35.04	121.4
70	215.7	215.1	0.2727	67.41	38.90	121.8
80	250.3	249.6	0.2313	65.71	42.87	122.0
90	289.0	288.2	0.1964	63.90	46.96	122.0
100	332.0	331.1	0.1668	61.95	51.21	121.8
110	379.8	378.8	0.1414	59.81	55.63	121.4
120	432.7	431.6	0.1195	57.42	60.30	120.5
130	491.2	490.1	0.1005	54.68	65.31	119.2
140	555.9	554.8	0.0835	51.38	70.84	117.0

Copyright Goodheart-Willcox Co., Inc.

C.15 R-507A Pressure-Enthalpy Diagram

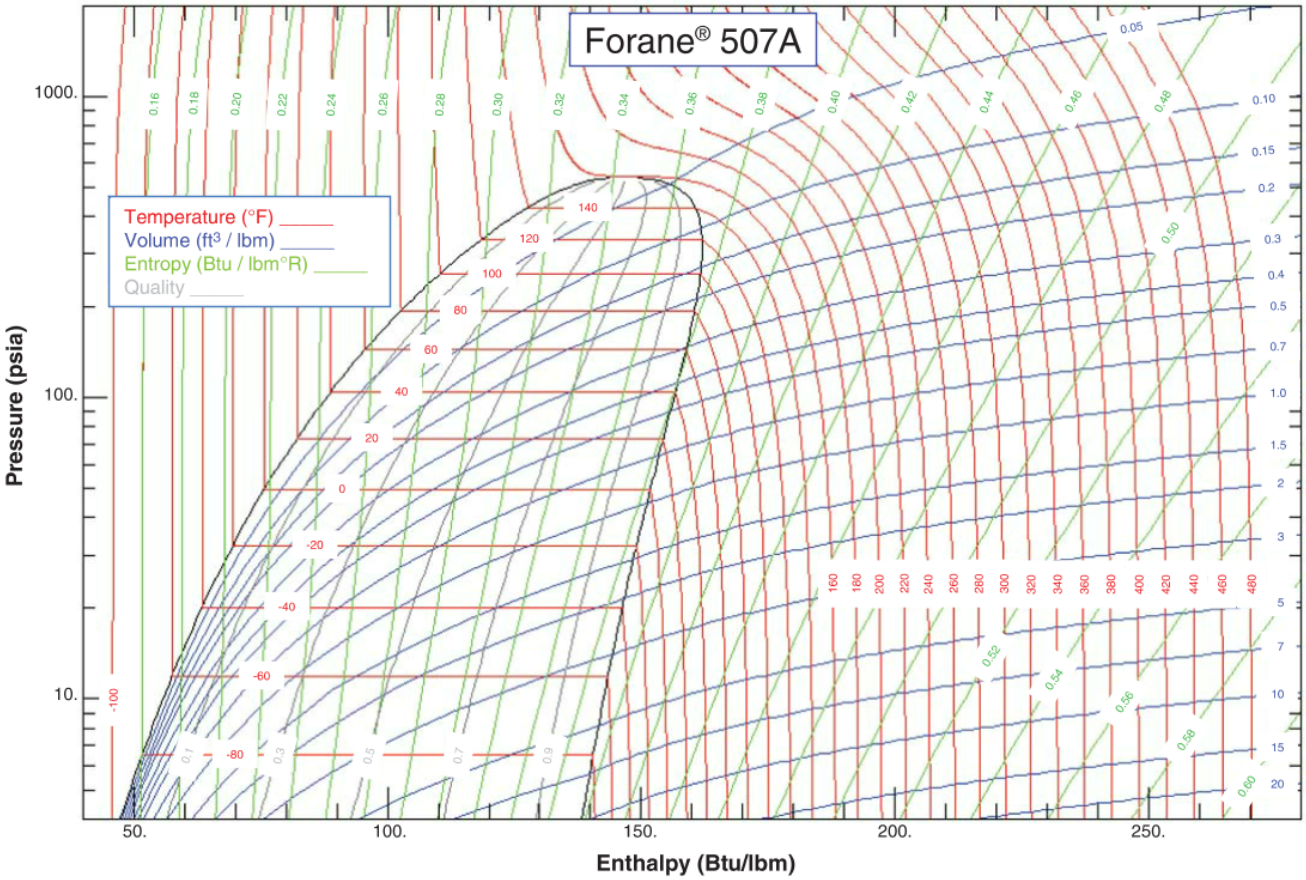

ARKEMA INNOVATIVE CHEMISTRY

This plot was generated using the NIST REFPROP Database (Lemmon, E.W., Huber, M.L., McLinden, M.O.NIST Standard Reference Database 23:Reference Fluid Thermodynamic and Transport Properties-REFPROP, Version 9.0, National Institute of Standards and Technlogy, Standard Reference Data Program, Gaithersburg, 2010) Reference State -IIR

FORANE REFRIGERANTS BY ARKEMA

Arkema, Inc.

C.16 R-507A Thermodynamic Properties						
Temperature (°F)	Pressure (psia)		Vapor Volume (ft³/lb)	Liquid Density (lb/ft³)	Enthalpy (Btu/lb)	
	Liquid	Vapor			Liquid	Vapor
–40	20.4	20.4	2.10	80.94	0.000	82.40
–30	26.0	26.0	1.67	79.83	2.987	83.81
–20	32.7	32.7	1.34	78.70	6.010	85.20
–10	40.7	40.7	1.09	77.53	9.073	86.56
0	50.1	50.0	0.89	76.34	12.18	87.89
10	61.0	60.9	0.74	75.11	15.33	89.19
20	73.6	73.6	0.61	73.84	18.52	90.45
30	88.1	88.1	0.51	72.52	21.77	91.67
40	104.7	104.6	0.43	71.15	25.08	92.84
50	123.5	123.4	0.36	69.73	28.45	93.94
60	144.7	144.6	0.31	68.23	31.90	94.97
70	168.5	168.3	0.26	66.65	35.42	95.92
80	195.1	194.9	0.22	64.97	39.03	96.77
90	224.8	224.6	0.19	63.17	42.75	97.50
100	257.7	257.5	0.16	61.21	46.59	98.07
110	294.2	293.9	0.14	59.07	50.59	98.43
120	334.4	334.1	0.11	56.67	54.79	98.53
130	378.8	378.6	0.10	53.89	59.26	98.24
140	427.9	427.6	0.08	50.50	64.17	97.30

Copyright Goodheart-Willcox Co., Inc.

C.17 R-508B Pressure-Enthalpy Diagram

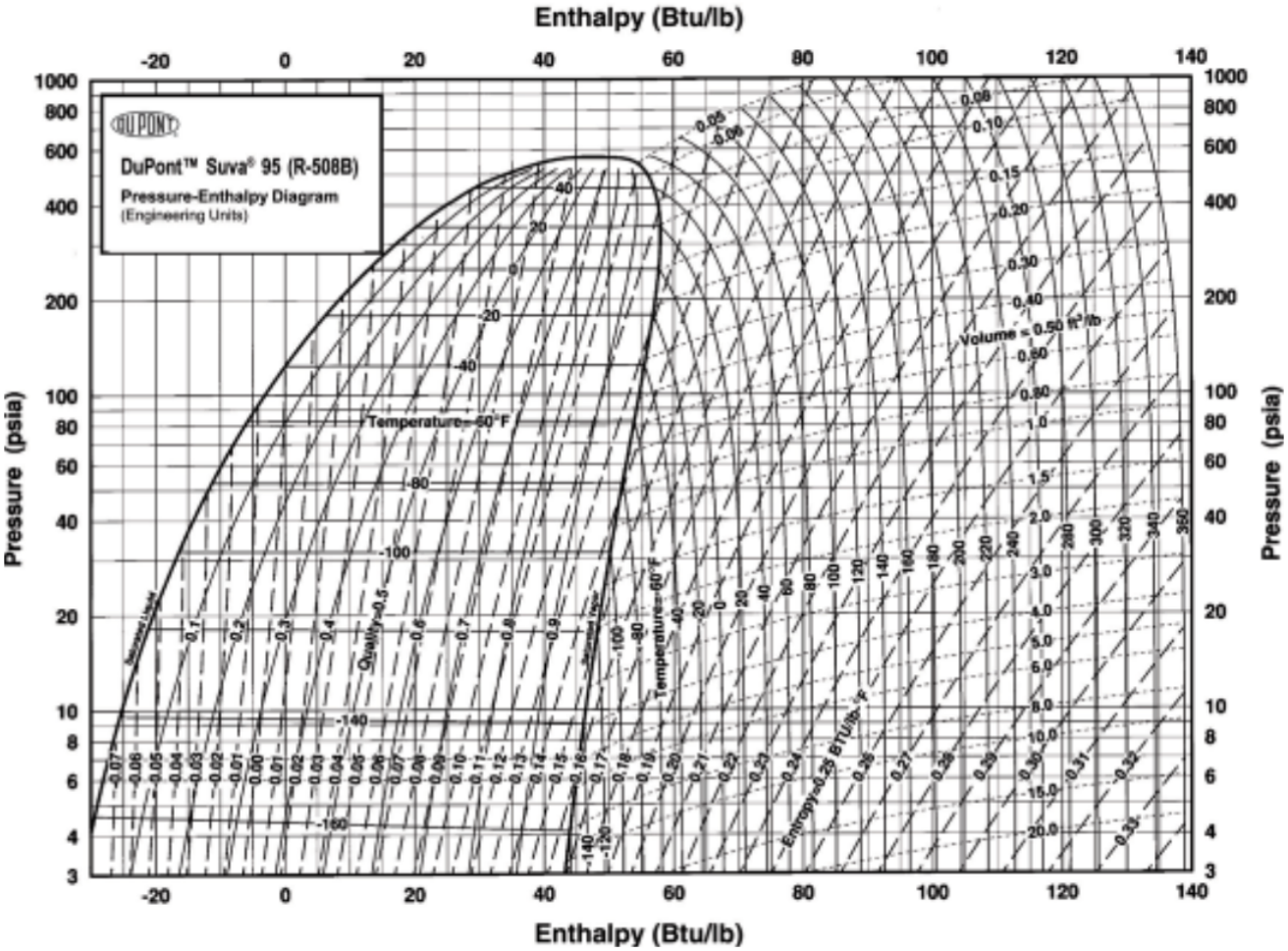

DuPont Company

C.18 R-508B Thermodynamic Properties

Temperature (°F)	Pressure (psia)		Vapor Volume (ft^3/lb)	Liquid Density (lb/ft^3)	Enthalpy (Btu/lb)	
	Liquid	Vapor			Liquid	Vapor
–150	6.2	5.9	5.4732	99.24	–29.70	45.29
–140	8.9	8.6	3.8427	97.80	–27.14	46.40
–130	12.6	12.3	2.7724	96.37	–24.57	47.49
–120	17.4	17.1	2.0477	94.92	–22.00	48.56
–110	23.4	23.1	1.5435	93.45	–19.40	49.59
–100	31.0	30.8	1.1841	91.94	–16.77	50.59
–90	40.4	40.1	0.9224	90.39	–14.11	51.56
–80	51.7	51.6	0.7282	88.79	–11.40	52.48
–70	65.4	65.3	0.5815	87.12	–8.648	53.35
–60	81.6	81.5	0.4690	85.36	–5.834	54.17
–50	100.6	100.6	0.3814	83.51	–2.955	54.92
–40	122.8	122.8	0.3125	81.55	0.000	55.60
–30	148.4	148.4	0.2575	79.45	3.041	56.18
–20	177.8	177.8	0.2133	77.18	6.182	56.66
–10	211.3	211.3	0.1772	74.72	9.441	56.99
0	249.3	249.2	0.1475	72.02	12.84	57.15
10	292.2	292.1	0.1227	69.02	16.40	57.05
20	340.6	340.5	0.1019	65.63	20.18	56.60

Copyright Goodheart-Willcox Co., Inc.

Appendix D: Electricity and Electronics

D.1 Electrical Units and Symbols			
Quantity	**Symbol**	**Unit**	**Unit Abbreviation**
Charge	*Q*	coulomb	C
Current	*I*	ampere	A
Electromotive force, voltage	*E*	volt	V
Resistance	*R*	ohm	Ω
Reactance	*X*	ohm	Ω
Impedance	*Z*	ohm	Ω
Capacitance	*C*	farad	F
Inductance	*L*	henry	H
Power	*P*	watt	W
Magnetomotive force	*F*	ampere (ampere turn)	A
Frequency	*f*	hertz	Hz

D.2 Resistor Color Codes

The color bands on a resistor indicate its resistance value.

Values Indicated by Color Coding			
Color	**Bands A and B**	**Band C**	**Band D**
Black	0	1	
Brown	1	10	
Red	2	100	
Orange	3	1,000	
Yellow	4	10,000	
Green	5	100,000	
Blue	6	1,000,000	
Violet	7		
Gray	8		
White	9		
Silver		0.01	±10
Gold		0.1	±5
No color			±20

A = First digit of the resistance value
B = Second digit of the resistance value
C = Multiplier
D = Tolerance (%)

A resistor that is color-coded orange, blue, red, and gold would have a resistance value of 36 × 100 = 3600 ohms. Since the fourth band is gold, the tolerance would be 5%. A 5% tolerance means the actual resistance can be between 3420 Ω and 3780 Ω.

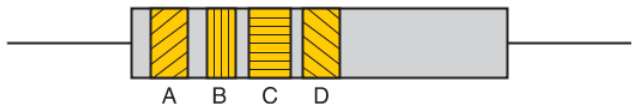

D.3 Galvanic Action Sequence

Certain materials produce electricity by chemical action. This is known as galvanic action. Some materials are much more active than others. Magnesium is one of the most active, and platinum is one of the least active.

The corrosion of materials (usually metals) is often due to galvanic action. Rapid deterioration occurs at the place where galvanic action takes place. Joints where two unlike galvanic materials touch should be electrically insulated from one another in order to minimize galvanic action.

The following chart lists the galvanic action sequence for some commonly used metals. The metals listed at the top of the chart are the most active and most likely to corrode. The metals at the end of the list are least likely to corrode.

Most Active Metals (Anode +)	Magnesium
	Magnesium alloys
	Zinc
	Aluminum 2S
	Cadmium
	Aluminum 17ST
	Steel or iron
	Cast iron
	18-8 Stainless steel
	Lead-tin solders
	Lead
	Tin
	Nickel
	Brass
	Copper
	Bronze
	Silver solder
Least Active Metals (Cathode –)	Silver
	Graphite
	Gold
	Platinum

Copyright Goodheart-Willcox Co., Inc.

Appendix E: Heat, Temperature, and Pressure

E.1 Latent Heat Values		
Substance	Latent Heat of Vaporization	
	Btu/lb	kJ/kg
Alcohol	385	896
Ethylene glycol	344	800
Propylene glycol	393	914
R-12	72	167
R-22	101	234
R-40 (methyl chloride)	184	428
R-123	73	170
R-134a	93	216
R-401A	98	227
R-401B	99	229
R-404A	87	202
R-407C	105	245
R-409A	95	221
R-410A	117	275
R-507	86	201
R-508B	72	168
R-717 (ammonia)	589	1371
R-718 (water)	970	2257

E.2 Standard Conditions

Standard air and *standard conditions* are the same. Both conditions include pressure, temperature, and air density of 0.075 lb/ft^3 (1.2007 kg/m^3). These values are shown in the following table:

Standard Conditions		
Condition	US Customary	SI Metric
Pressure	29.92″ Hg 14.696 psia 0 psi	760 mm Hg 101.28 kPa
Temperature	69.8°F	21°C
Specific Volume	13.33 ft^3/lb	0.833 m^3/kg

E.3 Heating Value of Fuels

Fuels commonly used for heating purposes are oil, gas, coal, and wood. Burning these fuels in atmospheric air produces the heat needed.

Heating Oil

Commercial grades of heating oil have been established by ASTM International. Grade numbers are 1 through 6, although No. 3 and No. 4 are seldom used. Numbers 5 and 6 are high-viscosity oils and require preheating before use. The grade of heating oil may be determined with a special heating oil hydrometer. Heating values of fuel oils are shown in the following table:

Heating Values of Fuel Oils			
Commercial Grade	Btu/gal	A.P.I.* Gravity Range ASTM**	Average Weight per Gallon
1	137,000	45–38	6.8
2	140,000	40–30	7.1
3	140,000*		
4	141,000	32–12	7.7
5	148,000	20–8	8.1
6	152,000	18–6	8.2

*American Petroleum Institute rating

**ASTM International

Fuel Gases

The heating value of fuel gases varies greatly, depending on their composition. The heating values of common fuel gases are shown in the following table:

Heating Values of Fuel Gases	
Fuel Gas	Heat Released (Btu/ft^3)
Natural gas	1000–1100*
Manufactured gas	500–600
LP (Liquid Petroleum)	2500–3200

*Check with the local gas company.

Copyright Goodheart-Willcox Co., Inc.

Coal

The heating value of coal depends on its moisture content, sulfur content, and other impurities. Heating values for coal are shown in the following table:

Heating Values of Coal	
Type of Coal	Heat Released (Btu/lb)
Bituminous	12,000–15,000
Anthracite	13,000–14,000

Wood

The heating value of wood is approximately 6200 Btu/lb.

E.4 Thermal Conductivity		
Miscellaneous Substances		
Material	K*	R**
Air	0.175	5.714
Concrete wall	8.00	0.125
Glass	5.00	0.20
Lead	243.00	0.004
Vacuum, high	0.004	250.00
Insulating Materials		
Material	K* Conductivity	R**
Cork, granulated	0.34	2.941
Cork, granulated impregnated with pitch	0.428	2.336
Balsa	0.32	3.125
Expanded rubber, rigid	0.22	4.55
Expanded polystyrene (extruded), plain	0.25	4.00
Expanded polystyrene, molded beads	0.16	6.25
Expanded polystyrene (extruded), 1″ thick or greater	0.14	7.14
Expanded polyurethane, 1″ thick or greater	0.16	6.25
Felt	0.25	4.00
Glass fiber, organic bonded	0.25	4.00

(*continued*)

Insulating Materials		
Material	K* Conductivity	R**
Glass wool (curled pyrex)	0.29	3.448
Kapok	0.24	4.167
Mineral (slag) wool, loose packed	0.26	3.846
Polyurethane	0.16	6.25
Rock wool (fibrous rock, also felted)	0.26	3.846
Rubber, cellular	0.37	2.703
Sawdust, pine	0.57	1.754
Silica aerogel, loose fill	0.17	5.88
Straw fibers, pressed	0.32	3.125
Wood fibers (kingia australis)	0.33	3.03
Wool, pure	0.26	3.846
Proprietary Materials		
Trade Name	K* Conductivity	R**
Armstrong corkboard	0.285	3.509
Celotex	0.31	3.226
Nu Wood	0.32	3.125
United 100% pure corkboard	0.27	3.704
US mineral wool	0.26	3.846
Ferro-Therm metal sheet (4 sheets)	0.226	4.425

K* = Btu in/hr·ft^2·°F

R** = Reciprocal of K

Reprinted by permission of the American Society of Heating, Refrigerating, and Air-Conditioning Engineers, Atlanta, Georgi

Copyright Goodheart-Willcox Co., Inc.

E.5 Refrigerant Pressure-Temperature Chart

Temp (°F)	Vapor Pressure PSIG									
	22	134a	401A Liquid	401A Vapor	401B Liquid	401B Vapor	404A Liquid	407C Liquid	407C Vapor	410A Liquid
–50	**6.1**	**18.7**	**13.5**	**17.9**				**2.7**	**11.0**	5.0
–45	**2.7**	**16.9**	**11.1**	**16.0**				0.6	**8.0**	7.7
–40	0.6	**14.8**	**8.4**	**13.8**	**6.5**	**11.8**	4.3	2.7	**4.6**	10.8
–35	2.6	**12.5**	**5.3**	**11.4**	**3.3**	**9.1**	6.8	5.1	**0.9**	14.1
–30	4.9	**9.8**	**2.0**	**8.7**	0.2	**6.1**	9.5	7.7	1.6	17.8
–25	7.4	**6.9**	0.8	**5.6**	2.1	**2.8**	12.5	10.6	3.9	21.9
–20	10.2	**3.7**	2.9	**2.2**	4.3	0.5	15.7	13.7	6.5	26.3
–15	13.2	**0.0**	5.1	0.7	6.6	2.5	19.3	17.2	9.3	31.2
–10	16.5	1.9	7.5	2.8	9.2	4.7	23.2	20.9	12.3	36.5
–5	20.1	4.1	10.1	5.0	12.0	7.1	27.5	25.0	15.7	42.2
0	24.0	6.5	13.0	7.4	15.1	9.7	32.1	29.5	19.4	48.4
5	28.3	9.1	16.1	10.1	18.4	12.6	37.0	34.3	23.5	55.2
10	32.8	11.9	19.5	13.0	22.0	15.8	42.4	39.5	27.9	62.4
15	37.8	15.0	23.1	16.2	25.9	19.2	48.2	45.2	32.7	70.3
20	43.1	18.4	27.1	19.6	30.1	23.0	54.5	51.2	37.9	78.7
25	48.8	22.1	31.4	23.4	34.6	27.0	61.2	57.7	43.5	87.7
30	55.0	26.1	36.0	27.4	39.5	31.4	68.4	64.7	49.6	97.4
35	61.5	30.4	40.9	31.8	44.8	36.1	76.1	72.2	56.1	107.7
40	68.6	35.0	46.2	36.5	50.4	41.1	84.4	80.2	63.2	118.8
45	76.1	40.1	51.8	41.6	56.4	46.6	93.2	88.8	70.7	130.6
50	84.1	45.4	57.9	47.0	62.8	52.4	103	97.9	78.8	143.2
55	92.6	51.2	64.3	52.8	69.6	58.7	113	107.6	87.5	156.5
60	101.6	57.4	71.2	59.0	76.9	65.4	123	118.0	96.8	170.7
65	111.3	64.0	78.5	65.7	84.7	72.5	135	128.9	106.7	185.8
70	121.4	71.1	86.3	72.8	92.9	80.1	147	140.5	117.3	201.8
75	132.2	78.7	94.5	80.3	102	88.2	159	152.8	128.6	218.7
80	143.6	86.7	103.2	88.4	111	96.8	173	165.8	140.5	236.5
85	155.7	95.2	112.4	96.9	121	106	187	179.6	153.2	255.4
90	168.4	104.3	122.2	106.0	131	116	202	194.1	166.7	275.4
95	181.8	114.0	132.5	115.6	142	126	218	209.4	181.0	296.4
100	195.9	124.2	143.3	125.8	153	137	234	225.5	196.1	318.6
105	210.8	135.0	154.8	136.5	166	148	252	242.4	212.1	341.9
110	226.4	146.4	166.8	147.8	178	160	270	260.3	229.0	366.4
115	242.8	158.4	179.4	159.8	192	173	289	279.0	246.9	392.3
120	260.0	171.2	192.7	172.4	206	187	310	298.6	265.8	419.4
125	278.0	184.6	206.6	185.7	220	201	331	319.2	285.7	447.9
130	296.9	198.7	221.2	199.7	236	216	353	340.7	306.7	477.9
135	316.7	213.6	236.5	214.5	252	231	377	363.3	328.8	509.4
140	337.4	229.2	252.5	229.9	269	248	401	387.0	352.1	542.5
145	359.0	245.7	269.3	246.2	287	265	426	411.7	376.6	577.3
150	381.7	262.9	286.8	263.2	305	283	453	437.5	402.5	613.9

Bold values are in in. Hg

Copyright Goodheart-Willcox Co., Inc.

E.6 Weights and Specific Heats

Material	Weight (lb/ft³)	Specific Heat (Btu/lb)	Material	Weight (lb/ft³)	Specific Heat (Btu/lb)
Gases			**Others**		
Air (normal temp.)	0.075	0.24	Concrete	147	0.19
Metals			Cork	15	0.48
Aluminum	166.5	0.214	Glass	164	0.199
Copper	552	0.094	Ice	57.5	0.504
Iron	480	0.118	Masonry	112	0.200
Lead	710	0.030	Paper	58	0.324
Mercury	847	0.033	Rubber	59	0.48
Steel	492	0.117	Sand	100	0.195
Zinc	446	0.096	Stone	138–200	0.20
Liquids			Tar	75	0.35
Alcohol	49.6	0.60	Wood, oak	48	0.57
Glycerin	83.6	0.576	Wood, pine	38	0.47
Oil	57.5	0.400			
Water	62.4	1.000			

E.7 Water Boiling Temperatures

Pressure (psia)	Boiling Temperature		Pressure (psia)	Boiling Temperature	
	°F	°C		°F	°C
0.1	35	2	5.0	162	72
0.2	53	12	6.0	170	77
0.3	64	18	7.0	177	81
0.4	73	23	8.0	183	84
0.5	80	27	9.0	188	87
0.6	85	29	10.0	193	89
0.7	90	32	11.0	198	92
0.8	94	34	12.0	202	94
0.9	98	37	13.0	206	97
1.0	102	39	14.0	209	98
2.0	126	52	14.7	212	100
3.0	141	61	15.0	213	101
4.0	153	67	20.0	228	109

Copyright Goodheart-Willcox Co., Inc.

E.8 Brine Freezing Temperatures

Brine is water mixed with a substance that will go into solution with the water. A brine provides a fluid that can readily flow at temperatures below 32°F (0°C).

Brines are of several types:

- Alcohol brines are usually made from ethyl alcohol.
- Salt brines are usually made with sodium chloride and/or calcium chloride. The eutectic point for a sodium chloride (common salt) solution is –6°F (–21°C). For calcium chloride, it is –60°F (–51°C).
- Glycol brines with noncorrosive properties are usually made from glycerin, ethylene glycol, or propylene glycol.

A hydrometer can be used to measure the density of a brine solution. The freezing temperature can be determined from the hydrometer reading. This is the same as measuring to determine the freezing temperature of cooling solution in automobile radiators. If the hydrometer reading indicates the solution freezing temperature is too high, it can be lowered by adding more of the antifreeze compound to the solution.

With alcohol brine, the density decreases with the lowering of the freezing temperature. This is because alcohol is lighter than water. A hydrometer with an alcohol testing scale must be used.

Freezing Temperature (°F and °C) of Various Brines

Specific Gravity	20°F (–7°C)	10°F (–12°C)	0°F (–18°C)	–10°F (–23°C)	–20°F (–29°C)	–30°F (–34°C)	–40°F (–40°C)
Alcohol (Formula No. 1)							
Specific gravity at 60°F		.9691	.9592	.9486	.9345		
Calcium Chloride							
Specific gravity at 60°F	1.090	1.140	1.175	1.201	1.227	1.254	1.265
Percent of chemical	10	17	20.5	23	25	27	28
Sodium Chloride							
Usable only down to 0°F	1.072	1.118	1.158				
Specific gravity at 60°F	10	16	21				
Percent of chemical							
Ethylene Glycol							
Specific gravity at 60°F	1.05	1.07	1.075	1.08	1.09	1.096	1.105
Percent of chemical	32	40	43	45	50	53	57

Copyright Goodheart-Willcox Co., Inc.

Appendix F: Equivalent Charts

F.1 Energy Equivalents (US Customary)	
Energy Measurement	**Equivalents**
1 Btu	778 ft-lb 1054.8 joules (J)
1 horsepower	33,000 ft-lb/min 550 ft-lb/sec 746 W 2545.6 Btu/hr 42.42 Btu/min 1.014 hp (metric)
1 horsepower hour	1 hp for 1 hr 1,980,000 ft-lb 746 W/hr 0.746 kWh 2545.6 Btu
1 watt (W)	3.414 Btu/hr
1 kilowatt (kW)	1000 W 1.34 hp
1 kilowatt hour (kWh)	1 kW for 1 hr 1000 W/hr

F.2 Linear Measurement Equivalents	
US Customary to SI Metric	
US Customary Measurement	**SI Metric Equivalents**
1 inch	2.54 cm 25.4 mm 25 400 µm
1 foot (12 inches)	0.304 m 30.48 cm
1 yard (3 feet)	0.914 m 91.44 cm
1 mile (5280 feet)	1.61 km
SI Metric to US Customary	
SI Metric Measurement	**US Customary Equivalents**
1 micron (µ) (0.001 mm)	0.000 039 4″ 1/25,000″
1 millimeter (1000 µm)	0.039″
1 centimeter (10 mm)	0.394″
1 decimeter (10 cm)	3.937″
1 meter (100 cm or 10 dm)	39.37″ 3.28′
1 kilometer (1000 m)	3280.8′ 0.6214 miles

Copyright Goodheart-Willcox Co., Inc.

F.3 Fractional Inch Equivalents

Fraction, Decimal, and Metric Equivalents

INCHES FRACTIONS	INCHES DECIMALS	MILLI-METERS	INCHES FRACTIONS	INCHES DECIMALS	MILLI-METERS
	.00394	.1	15/32	.46875	11.9063
	.00787	.2		.47244	12.00
	.01181	.3	31/64	.484375	12.3031
1/64	.015625	.3969	1/2	.5000	12.70
	.01575	.4		.51181	13.00
	.01969	.5	33/64	.515625	13.0969
	.02362	.6	17/32	.53125	13.4938
	.02756	.7	35/64	.546875	13.8907
1/32	.03125	.7938		.55118	14.00
	.0315	.8	9/16	.5625	14.2875
	.03543	.9	37/64	.578125	14.6844
	.03937	1.00		.59055	15.00
3/64	.046875	1.1906	19/32	.59375	15.0813
1/16	.0625	1.5875	39/64	.609375	15.4782
5/64	.078125	1.9844	5/8	.625	15.875
	.07874	2.00		.62992	16.00
3/32	.09375	2.3813	41/64	.640625	16.2719
7/64	.109375	2.7781	21/32	.65625	16.6688
	.11811	3.00		.66929	17.00
1/8	.125	3.175	43/64	.671875	17.0657
9/64	.140625	3.5719	11/16	.6875	17.4625
5/32	.15625	3.9688	45/64	.703125	17.8594
	.15748	4.00		.70866	18.00
11/64	.171875	4.3656	23/32	.71875	18.2563
3/16	.1875	4.7625	47/64	.734375	18.6532
	.19685	5.00		.74803	19.00
13/64	.203125	5.1594	3/4	.7500	19.05
7/32	.21875	5.5563	49/64	.765625	19.4469
15/64	.234375	5.9531	25/32	.78125	19.8438
	.23622	6.00		.7874	20.00
1/4	.2500	6.35	51/64	.796875	20.2407
17/64	.265625	6.7469	13/16	.8125	20.6375
	.27559	7.00		.82677	21.00
9/32	.28125	7.1438	53/64	.828125`	21.0344
19/64	.296875	7.5406	27/32	.84375	21.4313
5/16	.3125	7.9375	55/64	.859375	21.8282
	.31496	8.00		.86614	22.00
21/64	.328125	8.3344	7/8	.875	22.225
11/32	.34375	8.7313	57/64	.890625	22.6219
	.35433	9.00		.90551	23.00
23/64	.359375	9.1281	29/32	.90625	23.0188
3/8	.375	9.525	59/64	.921875	23.4157
25/64	.390625	9.9219	15/16	.9375	23.8125
	.3937	10.00		.94488	24.00
13/32	.40625	10.3188	61/64	.953125	24.2094
27/64	.421875	10.7156	31/32	.96875	24.6063
	.43307	11.00		.98425	25.00
7/16	.4375	11.1125	63/64	.984375	25.0032
29/64	.453125	11.5094	1	1.0000	25.4000

Copyright Goodheart-Willcox Co., Inc.

F.4 Area Equivalents

Measurement	Equivalents
1 in^2	0.0065 m^2
1 ft^2	144 in^2 0.093 m^2
1 yd^2	9 ft^2 1296 in^2 0.836 m^2

F.5 Volume Equivalents

Measurement	Equivalents
1 in^3	0.016 L 16.39 cm^3
1 ft^3	1728 in^3 28.317 L 0.0283 m^3 7.481 gal 28 317.00 cm^3
1 yd^3	27 ft^3 46,656 in^3
1 gal	0.1337 ft^3 3.79 L 231 in^3 3785 cm^3
1 cm^3	0.0610237 in^3
1 L	61.03 in^3 1000 cm^3 0.2642 gal

F.6 Pressure Equivalents

Pressure Measurement	US Customary Equivalent	SI Metric Equivalent
1 psia	0.068 atmosphere	
	144 lb/ft^2	0.703 m water
	2.036″ Hg	70.3 cm water
	2.307′ water	51.7 mm Hg
	27.7″ water	6.9 kPa
1 psig	15.7 psia	108 kPa
0 psig	14.7 psia	101.3 kPa
1 oz/in^2	0.128″ Hg	
	1.73″ water	
1″ Hg	0.0334 atmosphere	3.386 kPa
	0.491 psi	25.4 mm Hg
	1.13′ water	0.3453 m water
	13.6″ water	
	70.73 lb/ft^2	
1′ water	0.0295 atmosphere	2.985 kPa
	0.434 psi	22.42 mm Hg
	62.43 lb/ft^2	0.305 m water
	0.03 atmosphere	
	0.883″ Hg	
1 atmosphere	29.92″ Hg	101.28 kPa
	33.94′ water	760 mm Hg
	14.696 psi	10.33 m water
	2116.35 lb/ft^2	
1 lb/ft^2	0.007 psi	0.048 kPa
	4.725×10^{-4}	0.359 mm Hg
	0.01414″ Hg	0.0049 m water
	0.016′ water	
1 kg/cm^2	14.22 psi	10 m water
	2048.17 lb/ft^2	
	0.967 atmosphere	97.98 kPa
	28.96″ Hg	
	32.8083′ water	
1 m water	1.42 psi	73.55 mm Hg
	204.8 lb/ft^2	9.78 kPa
	0.097 atmosphere	
	2.896″ Hg	
	3.28′ water	
1 mm Hg	0.019 psi	0.133 kPa
	2.78 lb/ft^2	0.0136 m water
	0.001316 atmosphere	
	0.039″ Hg	
	0.0446′ water	

F.7 Velocity Equivalents

Velocity Measure	US Customary Equivalent	SI Metric Equivalent
1 mph	1.47 fps 0.87 knot	1.61 km/hr 0.45 m/sec
1 fps	0.68 mph 60 fpm 0.59 knot	1.10 km/hr 0.305 m/sec
1 m/sec	3.28 fps 2.24 mph 1.94 knot	3.6 km/hr
1 km/hr	0.91 fps 0.62 mph 0.54 knot	0.28 m/sec

(*continued*)

Copyright Goodheart-Willcox Co., Inc.

F.8 Liquid Measure Equivalents

Liquid Measure	US Customary	SI Metric
1 pt	16 oz	0.473 L
1 qt	2 pt 32 oz	0.946 L
1 gal	4 qt 8 pt 231 in^3 8.34 lb water	3.785 L
1 ft^3	7.48 gal	
1.136 qt		1 L

F.9 Weight Equivalents

Avoirdupois	
Weight	**Equivalents**
1 oz	437 grains (gr)
	28.35 g
	0.028 kg
1 lb	7000 gr
	0.4536 kg
	453.6 g
	16 oz
1 gr	0.000143 lb
	0.064 80 g
1 ton	2000 lb
	907.2 kg
1 g	.001 kg
	15.43 gr
	0.03527 oz
	0.002205 lb
1 kg	2.2 lb

Specific Weights (Density)

Specific Weight	Equivalents
1 lb/in^3	1728 lb/ft^3
	27.68 g/cm^3
	2.768×10^7 g/m^3
1 lb/ft^3	5.787×10^{-4} lb/in^3
	0.016 g/cm^3
1 g/cm^3	62.43 lb/ft^3
1 kg/m^3	0.06243 lb/ft^3

F.10 Flow Equivalents

Flow rate	Equivalents
1 cfm	7.481 gpm 28 317 cm^3/min 449 gal/hr 28.32 L/min 1700 L/hr
1 ft^3/hr	0.0167 ft^3/min 0.472 L/min 0.1247 gpm 28.317 L/hr 7.481 gal/hr 472 cm^3/min
1 gpm	0.1337 ft^3/min 3.79 L/min 8.022 ft^3/hr 3785 cm^3/min
1 L/min	0.0353 ft^3/min 1000 cm^3/min 2.118 ft^3/hr 0.2642 gpm 15.852 gal/hr

F.11 Heat Equivalents

1 Btu	1.055 kJ
1 kJ	0.948 Btu
1 Btu/lb	2.326 kJ/kg
1 kJ/kg	0.4299 Btu/lb
1 Btu/lb°F	4.187 kJ/kg°C
1 kJ/kg°C	0.2388 Btu/lb°F
1 W	1 J/s
1 kW	1 kJ/s
1 Btu/hr	0.2931 W
1 W	3.412 Btu/hr
1 kW	3,412 Btu/hr
1 ton of refrigeration	12,000 Btu/hr
1 ton of refrigeration	3.5 kW

Copyright Goodheart-Willcox Co., Inc.

F.12 Temperature Conversion Table					
°C	Temp	°F	°C	Temp	°F
–267.8	–450		–62.2	–80	–112.0
–262.2	–440		–56.7	–70	–94.0
–256.7	–430		–51.1	–60	–76.0
–251.1	–420		–45.6	–50	–58.0
–245.6	–410		–40.0	–40	–40.0
–240.0	–400		–34.4	–30	–22.0
–234.4	–390		–28.9	–20	–4.0
–228.9	–380		–23.3	–10	14.0
–223.3	–370		–17.8	0	32.0
–217.8	–360		–17.2	1	33.8
–212.2	–350		–16.7	2	35.6
–206.7	–340		–16.1	3	37.4
–201.1	–330		–15.6	4	39.2
–195.6	–320		–15.0	5	41.0
–190.0	–310		–14.4	6	42.8
–184.4	–300		–13.9	7	44.6
–178.9	–290		–13.3	8	46.4
–173.3	–280		–12.8	9	48.2
–167.8	–270	–454.0	–12.2	10	50.0
–162.2	–260	–436.0	–11.7	11	51.8
–156.7	–250	–418.0	–11.1	12	53.6
–151.1	–240	–400.0	–10.6	13	55.4
–145.6	–230	–382.0	–10.0	14	57.2
–140.0	–220	–364.0	–9.4	15	59.0
–134.4	–210	–346.0	–8.9	16	60.8
–128.9	–200	–328.0	–8.3	17	62.6
–123.3	–190	–310.0	–7.8	18	64.4
–117.8	–180	–292.0	–7.2	19	66.2
–112.2	–170	–274.0	–6.7	20	68.0
–106.7	–160	–256.0	–6.1	21	69.8
–101.1	–150	–238.0	–5.6	22	71.6
–95.6	–140	–220.0	–5.0	23	73.4
–90.0	–130	–202.0	–4.4	24	75.2
–84.4	–120	–184.0	–3.9	25	77.0
–78.9	–110	–166.0	–3.3	26	78.8
–73.3	–100	–148.0	–2.8	27	80.6
–67.8	–90	–130.0	–2.2	28	82.4

(*continued*)

Copyright Goodheart-Willcox Co., Inc.

F.12 Temperature Conversion Table					
°C	Temp	°F	°C	Temp	°F
–1.7	29	84.2	18.9	66	150.8
–1.1	30	86.0	19.4	67	152.6
–0.6	31	87.8	20.0	68	154.4
0.0	32	89.6	20.6	69	156.2
0.6	33	91.4	21.1	70	158.0
1.1	34	93.2	21.7	71	159.8
1.7	35	95.0	22.2	72	161.6
2.2	36	96.8	22.8	73	163.4
2.8	37	98.6	23.3	74	165.2
3.3	38	100.4	23.9	75	167.0
3.9	39	102.2	24.4	76	168.8
4.4	40	104.0	25.0	77	170.6
5.0	41	105.8	25.6	78	172.4
5.6	42	107.6	26.1	79	174.2
6.1	43	109.4	26.7	80	176.0
6.7	44	111.2	27.2	81	177.8
7.2	45	113.0	27.8	82	179.6
7.8	46	114.8	28.3	83	181.4
8.3	47	116.6	28.9	84	183.2
8.9	48	118.4	29.4	85	185.0
9.4	49	120.2	30.0	86	186.8
10.0	50	122.0	30.6	87	188.6
10.6	51	123.8	31.1	88	190.4
11.1	52	125.6	31.7	89	192.2
11.7	53	127.4	32.2	90	194.0
12.2	54	129.2	32.8	91	195.8
12.8	55	131.0	33.3	92	197.6
13.3	56	132.8	33.9	93	199.4
13.9	57	134.6	34.4	94	201.2
14.4	58	136.4	35.0	95	203.0
15.0	59	138.2	35.6	96	204.8
15.6	60	140.0	36.1	97	206.6
16.1	61	141.8	36.7	98	208.4
16.7	62	143.6	37.2	99	210.2
17.2	63	145.4	37.8	100	212.0
17.8	64	147.2	43.3	110	230.0
18.3	65	149.0	48.9	120	248.0

(*continued*)

Copyright Goodheart-Willcox Co., Inc.

F.12 Temperature Conversion Table					
°C	Temp	°F	°C	Temp	°F
54.4	130	266.0	260.0	500	932.0
60.0	140	284.0	265.6	510	950.0
65.6	150	302.0	271.1	520	968.0
71.1	160	320.0	276.7	530	986.0
76.7	170	338.0	282.2	540	1004.0
82.2	180	356.0	287.8	550	1022.0
87.8	190	374.0	293.3	560	1040.0
93.3	200	392.0	298.9	570	1058.0
98.9	210	410.0	304.4	580	1076.0
104.4	220	428.0	310.0	590	1094.0
110.0	230	446.0	315.6	600	1112.0
115.6	240	464.0	321.1	610	1130.0
121.1	250	482.0	326.7	620	1148.0
126.7	260	500.0	332.2	630	1166.0
132.2	270	518.0	337.8	640	1184.0
137.8	280	536.0	343.3	650	1202.0
143.3	290	554.0	348.9	660	1220.0
148.9	300	572.0	354.4	670	1238.0
154.4	310	590.0	360.0	680	1256.0
160.0	320	608.0	365.6	690	1274.0
165.6	330	626.0	371.1	700	1292.0
171.1	340	644.0	376.7	710	1310.0
176.7	350	662.0	382.2	720	1328.0
182.2	360	680.0	387.8	730	1346.0
187.8	370	698.0	393.3	740	1364.0
193.3	380	716.0	398.9	750	1382.0
198.9	390	734.0	404.4	760	1400.0
204.4	400	752.0	410.0	770	1418.0
210.0	410	770.0	415.6	780	1436.0
215.6	420	788.0	421.1	790	1454.0
221.1	430	806.0	426.7	800	1472.0
226.7	440	824.0	432.2	810	1490.0
232.2	450	842.0	437.8	820	1508.0
237.8	460	860.0	443.3	830	1526.0
243.3	470	878.0	448.9	840	1544.0
248.9	480	896.0	454.4	850	1562.0
254.4	490	914.0	460.0	860	1580.0

(*continued*)

Copyright Goodheart-Willcox Co., Inc.

F.12 Temperature Conversion Table					
°C	Temp	°F	°C	Temp	°F
465.6	870	1598.0	610.0	1130	2066.0
471.1	880	1616.0	615.6	1140	2084.0
476.7	890	1634.0	621.1	1150	2102.0
482.2	900	1652.0	626.7	1160	2120.0
487.8	910	1670.0	632.2	1170	2138.0
493.3	920	1688.0	637.8	1180	2156.0
498.9	930	1706.0	643.3	1190	2174.0
504.4	940	1724.0	648.9	1200	2192.0
510.0	950	1742.0	704.4	1300	2372.0
515.6	960	1760.0	760.0	1400	2552.0
521.1	970	1778.0	815.6	1500	2732.0
526.7	980	1796.0	871.1	1600	2912.0
532.2	990	1814.0	926.7	1700	3092.0
537.8	1000	1832.0	982.2	1800	3272.0
543.3	1010	1850.0	1037.8	1900	3452.0
548.9	1020	1868.0	1093.3	2000	3632.0
554.4	1030	1886.0	1148.9	2100	3812.0
560.0	1040	1904.0	1204.4	2200	3992.0
565.6	1050	1922.0	1260.0	2300	4172.0
571.1	1060	1940.0	1315.6	2400	4352.0
576.7	1070	1958.0	1371.1	2500	4532.0
582.2	1080	1976.0	1426.7	2600	4712.0
587.8	1090	1994.0	1482.2	2700	4892.0
593.3	1100	2012.0	1537.8	2800	5072.0
598.9	1110	2030.0	1593.3	2900	5252.0
604.4	1120	2048.0	1648.9	3000	5432.0

Copyright Goodheart-Willcox Co., Inc.

Appendix G: EPA Certification

The depletion of the ozone layer has been an international concern. The threat of ozone molecules being destroyed by chlorine molecules was a major reason for the Environmental Protection Agency (EPA) to require technician certification.

The EPA requires technicians who service air-conditioning and refrigeration equipment that uses CFC, HCFC, HFC, or HFO refrigerant to be certified. This requirement includes all persons who install, maintain, service, or repair equipment and may reasonably have the opportunity to release these refrigerants into the atmosphere. In addition, anyone who disposes of refrigerant or air-conditioning equipment must be certified.

EPA certification is achieved by successfully completing an EPA-approved test. This is required by Section 608 of the Clean Air Act. Major topics covered in certification programs include the following:

- Refrigerant storage and handling.
- Refrigerant transportation.
- Recovery equipment and procedures.
- Basic field testing of refrigerant for purity.
- Isolation of system components to prevent venting of refrigerant.
- Leak detection, isolation of leaks, and leak repairs.
- Hazardous waste handling, storage, and disposal regulations.

Only technicians certified by an EPA certifying agency are permitted to purchase refrigerant. Certification programs approved by the EPA are offered as seminars and workshops.

Technicians must fully understand the safety practices necessary when handling and storing refrigerants. It is the technician's responsibility to use safe practices and procedures. See **Figure G-1**.

Section 608 of the Clean Air Act charges the EPA with establishing and enforcing regulations pertaining to the refrigeration industry. These EPA regulations cover a wide scope of topics. A summary of the final regulations follows:

- Requires service practices that maximize recycling of CFCs, HCFCs, HFCs, and HFOs during service and disposal of air-conditioning and refrigeration equipment.
- Sets certification requirements for recycling and recovery equipment, technicians, and reclaimers.
- Restricts the sale of refrigerant to only certified technicians. Small cans (under 2 lb) of HFC and HFO refrigerants for use in motor vehicle air-conditioner systems are exempt.
- Technicians must evacuate to a specified level of vacuum when evacuating HFC appliances.
- Requires the repair of substantial leaks in air-conditioning and refrigeration equipment with a charge greater than 50 lb. The leak rate must be calculated each time refrigerant is added to the system.
- Leak verification tests on commercial, industrial, and comfort cooling systems must be performed to demonstrate that the leak was successfully repaired.
- Establishes safe disposal requirements to ensure removal of refrigerants from goods that enter the

Refrigerant Handling Safety Recommendations

1. Only fill cylinders that are currently DOT-approved for fluorocarbon refrigerants. Always inspect the cylinder for pressure rating and latest hydrostatic test date. Be sure to thoroughly check each cylinder for dents, gouges, bulges, cuts, or any other imperfections that may render it unsafe to hold refrigerant for storage or transportation.
2. It is highly recommended to read the Air-Conditioning, Heating, and Refrigeration Institute "Guideline K—Guideline for Containers for Recovered Non-flammable Fluorocarbon Refrigerants."
3. Be sure all connections are made tight before transferring refrigerant into cylinders. Be sure all closures are made tight on the cylinder immediately after filling.
4. Always use a scale when filling any cylinder. DO NOT OVERFILL.
5. CAUTION: Liquid refrigerant can cause frostbite if skin contact occurs. Be aware that the refrigerant/oil being removed from a system may contain contaminants that may be harmful to breathe or to contact with the skin. Always provide fresh air when working in enclosed areas. Avoid breathing vapors. Always wear safety glasses and gloves (cold resistant for pressurized refrigerants and rubber-type for R-11, R-113, or R-123). Avoid contact with clothing.

National Refrigerants, Inc.

Figure G-1. Standard safety recommendations to be followed when removing refrigerant from a system.

Copyright Goodheart-Willcox Co., Inc.

waste stream with the charge intact (examples include motor vehicle air conditioners, home refrigerators, and room air conditioners).

The Clean Air Act—Section 608

In order to understand EPA certification testing, one must have a better understanding of Section 608 of the Clean Air Act. In 1990, the Clean Air Act (CAA) became a law. Its regulations became effective on May 14, 1993. Its goal was to increase environmental awareness, increase conservation, and reduce pollution. This section of text defines the procedures to reduce the release of chemicals into the atmosphere. In broad terms, Section 608 of the Clean Air Act does the following:

- Controls refrigerant purchase.
- Requires repair of large refrigerant leaks.
- Increases cooperation among countries in an effort to reduce emissions.
- Reduces industrial use of refrigerants.
- Discontinues the production of certain refrigerants.

Section 608 of the Clean Air Act delegates to the EPA the power to establish and enforce these regulations regarding the HVACR industry. The EPA regularly reviews the status and effectiveness of the rule and makes adjustments. Changes to the technician certification, service, leak reporting, and disposal of units were approved for 2018 and 2019.

EPA Section 608 requires that technicians obtain certifications specific to the equipment they will be servicing or installing. This ensures that management of refrigerants is handled in a manner consistent with best practices. Apprentices are exempt from testing requirements if they are closely supervised by a certified technician.

Test prep courses are offered by EPA requirements on service practices and refrigerant reclamation. Close to 100 organizations have been approved by the EPA to provide test preparation and testing. National providers include ESCO Institute, RSES, Video General, and Ferris State University. A complete list of preparation and testing sites can be found on the EPA website.

EPA Certification Types

Technician certification to work on stationary refrigerant systems is regulated by the EPA Rule 608 of the Federal Register. Certification is broken down into four categories, based on the size and type of unit on which the technician will be approved to perform work. Technicians may take the exam over as many times as necessary to achieve a passing grade.

Technicians must be certified in the equipment category that they will be servicing or installing. Each of the four certification levels directly correlates to the type of service provided and the type of equipment serviced. The following are the EPA classifications for technician certification:

- Type I: small appliances.
- Type II: high-pressure or very high-pressure appliances.
- Type III: low-pressure appliances.
- Type IV: Universal certification.

The Type I, II, and III certification exams consist of 25 core questions and 25 questions specific to the type of exam taken for a total of 50 questions. The Universal certification exam consists of 25 core questions as well as 25 questions each of each Type I, II, and III for a total of 100 questions. A passing grade per section is 72% or 18 of 25 correct. Upon successful completion of the exam, the technician will receive a certificate and a patch.

A further description of the types of certification follows. The type of certification indicates the type of equipment on which the technician may work. Being certified in Type I does not mean a technician can perform services on Type II or III equipment. However, a technician with Type IV certification can work on Type I, II, and III equipment.

Type I Certification: Small Appliances

Technicians are required to earn Type I certification in order to perform maintenance, service, or repair on small appliances with 5 pounds of refrigerant or less. The test consists of 25 core questions and 25 Type I specific questions, for a total of 50 multiple-choice questions.

Type I certification exams are offered in an open book or closed book format. The test may be taken online, mailed in, or proctored. The open book test score must be at least 84% correct. The proctored (closed book) test score must be at least 72%.

Type II Certification: High- or Very High-Pressure Appliances

Technicians who pass the Type II test are certified to recover refrigerant during maintenance, service, or repair of high-pressure equipment. The boiling point of a refrigerant is the key to defining it as high or very high pressure. Boiling points between –58°F (–50°C) and 50°F (10°C) at atmospheric pressure are high pressure. Refrigerants with a boiling point below –58°F (–50°C) at atmospheric pressure are considered very high pressure.

Copyright Goodheart-Willcox Co., Inc.

High-pressure refrigerants include R-12, R-22, R-134a, R-1234yf, R-402A, R-402B, R-404A, R-407A, R-407B, R-407C, R-410A, R-500, and R-502. Very high-pressure refrigerants include R-13, R-23, and R-503. Systems using these refrigerants can only be recovered by Type II or Universal certified technicians.

Type II certification includes the following types of equipment:

- Residential air-conditioning and heat pumps.
- Commercial air-conditioning equipment.
- Chillers (other than low-pressure).
- Commercial refrigeration.
- Transport refrigeration.

The Type II certification test consists of 25 core questions and 25 Type II specific questions for a total of 50 multiple-choice questions. The test may only be taken proctored. The closed book test score must be at least 72%.

Type III Certification: Low-Pressure Appliances

Type III certification covers low-pressure appliances, which are charged with refrigerant having a boiling point above 50°F (10°C) at atmospheric pressure. Low-pressure systems typically include chillers, centrifugal compressors, and other equipment charged with R-11, R-123, and other low-pressure refrigerants.

The Type III certification test consists of 25 core questions and 25 Type III specific questions for a total of 50 multiple-choice questions. The test may only be taken proctored. The closed book test score must be at least 72%. Technicians who pass the Type III exam are certified to recover refrigerant during maintenance, service, or repair of low-pressure equipment.

Type IV Certification: Universal Certification

The Universal certification is the highest level of EPA certification. Technicians awarded Universal certification may recover refrigerant during maintenance, service, or repair of small appliances, high-pressure equipment, and low-pressure equipment. Such certification allows the technician to work on any type of air-conditioning and refrigeration equipment other than motor vehicle air conditioning.

Type IV certification encompasses the work covered under Types I, II, and III certification. The Type IV certification test consists of 25 core questions, 25 Type I questions, 25 Type II questions, and 25 Type III questions, for a total of 100 questions. The test may only be taken proctored. The closed book test score must be at least 72%.

Exam Preparation

Determine what to study in preparing for taking the exam. Areas of research are listed in a section later in this chapter. A review of the following chapters is recommended:

- Chapter 8, *Working with Tubing and Piping.*
- Chapter 9, *Introduction to Refrigerants.*
- Chapter 10, *Equipment and Instruments for Refrigerant Handling and Service.*
- Chapter 11, *Working with Refrigerants.*

The third step is to begin reviewing. Always keep a positive attitude throughout the studying process and during the exam. Additional information can be obtained from the EPA and local refrigeration organizations.

Studying for the tests can be divided into two parts. The first part includes studying those questions requiring what is called rote "specific" memorization. An example would be, "What term is used to describe a compressor that is contained within a sealed dome?" Questions of this type are best studied shortly before the exam since they only require simple memorization.

The second type of question is more complex. It requires the evaluation of facts and situations. It is based on a situational understanding of many items. Such questions are slower and more difficult to learn than the rote "specific" memorization questions.

Taking the Test

The certification exam test format will consist of multiple-choice questions. Each question will offer four possible answers. Only one of these answers is correct. Read each question and its suggested answers carefully. If a question is difficult to answer quickly, skip it and go on to the next one. Skipping these questions initially will assist in effective time management during the test. After the last question, return to those questions initially skipped. If still uncertain which answer is correct, eliminate as many incorrect answers as possible. Then, make an educated guess using those remaining choices.

If time remains, recheck all work for accuracy. It is important to remember that there is no penalty for incorrect answers. Therefore, there is no difference between leaving an answer blank or getting it wrong. Answer all questions even if it is necessary to guess at an answer.

Remember that pacing is important. Remain aware of progress throughout the exam. Bring a watch in case there is no clock in the room.

Copyright Goodheart-Willcox Co., Inc.

Areas for Research

To prepare for certification testing, research the subjects listed below. These are noted on the US EPA website and can be divided into core knowledge and specific certification type categories.

Core Knowledge

Ozone Depletion:

- Destruction of ozone by chlorine.
- Presence of chlorine in CFC and HCFC refrigerants.
- Identification of CFC, HCFC, and HFC refrigerants (not chemical formulas, but that R-12 is a CFC, R-22 is an HCFC, R-134a is an HFC, etc.).
- Identification of ozone-depletion potential—that CFCs have higher ozone-depletion potential (ODP) than HCFCs, which in turn have higher ODP than HFCs.
- Health and environmental effects of ozone depletion.
- Evidence of ozone depletion and role of CFCs and HCFCs.

Clean Air Act and Montreal Protocol:

- CFC phase-out date.
- Venting prohibition at servicing.
- Venting prohibition at disposal.
- Venting prohibition on substitute refrigerants in November 1995.
- Maximum penalty under the Clean Air Act.
- Montreal Protocol (international agreement to phase out production of ozone-depleting substances).

Section 608 Regulations:

- Definition and identification of high-pressure and low-pressure refrigerants.
- Definition of system-dependent vs. self-contained recovery/recycling equipment.
- Identification of equipment covered by the rule (all air-conditioning and refrigeration equipment containing CFCs, HCFCs, HFCs, or HFOs except motor vehicle air conditioners).
- Requirement that recycling and recovery equipment must be EPA certified.
- Standard for reclaimed refrigerant.

Substitute Refrigerants and Oils:

- Absence of "drop-in" replacements.
- Incompatibility of substitute refrigerants with many lubricants used with CFC and HCFC refrigerants and incompatibility of CFC and HCFC refrigerants with many new lubricants (includes identification of lubricants for given refrigerants, such as esters with R-134a; alkylbenzenes for HCFCs).
- Fractionation problem—tendency of different components of blends to leak at different rates.

Refrigeration:

- Refrigerant states (vapor vs. liquid) and pressures at different points of refrigeration cycle; how/when cooling occurs.
- Refrigeration gauges (color codes, ranges of different types, proper use).

Three Rs:

- Definitions of recovery, recycle, and reclaim.

Recovery Techniques:

- Need to avoid mixing refrigerants.
- Factors affecting speed of recovery (ambient temperature, size of recycling or recovery equipment, hose length and diameter).

Dehydration Evacuation:

- Need to evacuate system to eliminate air and moisture at the end of service.

Safety:

- Risks of exposure to refrigerants (oxygen deprivation, cardiac effects, frostbite, long-term hazards).
- Personal protective equipment (gloves, goggles, self-contained breathing apparatus—SCBA—in extreme cases).
- Recovery cylinders vs. disposable cylinders (ensure recovery cylinder is DOT-approved, know recovery cylinder's yellow and gray color code, never refill disposable).
- Risks of filling cylinders more than 80% full.
- Use of nitrogen rather than oxygen or compressed air for leak detection.
- Use of pressure regulator and relief valve with nitrogen.

Shipping:

- Labels required for refrigerant cylinders (refrigerant identification, DOT classification tag).

Type I (small appliances)

Recovery Requirements:

- Definition of small appliance.
- Evacuation requirements for small appliances with and without working compressors.

Recovery Techniques:

- Use of pressure and temperature to identify refrigerants and detect noncondensables.

Copyright Goodheart-Willcox Co., Inc.

- Methods to recover refrigerant from small appliances with inoperative compressors using a system-dependent or "passive" recovery device (such as heating and sharply striking the compressor, using a vacuum pump with a nonpressurized recovery container).
- Need to install both high-side and low-side access valves when recovering refrigerant from small appliances with inoperative compressors.
- Need to operate operative compressors when recovering refrigerant with a system-dependent ("passive") recovery device.
- Should remove solderless access fittings at conclusion of service.
- R-134a as likely substitute for R-12.

Safety:

- Decomposition products of refrigerants at high temperatures (HCl, HF, etc.).

Type II (high- or very high-pressure appliances)

Leak Detection:

- Signs of leakage in high-pressure systems (excessive superheat, traces of oil for hermetics).
- Need to leak test before charging or recharging equipment.
- Order of preference for leak test gases.

Leak Repair Requirements:

- Allowable annual leak rate for commercial and industrial process refrigeration.
- Allowable annual leak rate for other appliances containing more than 50 lb of refrigerant:
  - Industrial process refrigeration: 30%
  - Commercial refrigeration: 20%
  - Comfort cooling: 10%

Recovery Techniques:

- Recovering liquid at beginning of recovery process speeds up process.
- Other methods for reducing recovery time (chilling recovery vessel, heating appliance or vessel from which refrigerant is being recovered).
- Methods for reducing cross-contamination and emissions when recovery or recycling machine is used with a new refrigerant.
- Need to wait a few minutes after reaching required recovery vacuum to see if system pressure rises (indicating that there is still liquid refrigerant in the system or in the oil).

Recovery Requirements:

- Evacuation requirements for high-pressure appliances in each of the following situations:
  - Disposal.
  - Major vs. non-major repairs.
  - Leaky vs. non-leaky appliances.
  - Appliance (or component) containing less vs. more than 200 lb.
- Definition of "major" repairs.
- Prohibition on using system-dependent recovery equipment on systems containing more than 15 pounds of refrigerant.

Refrigeration:

- How to identify refrigerant in appliances.
- Pressure-temperature relationships of common high-pressure refrigerants (may use standard temperature-pressure chart—be aware of need to add 14.7 to translate psig to psia).
- Components of high-pressure appliances (liquid receiver, evaporator, accumulator, etc.) and state of refrigerant (vapor vs. liquid) in them.

Safety:

- Shouldn't energize hermetic compressors under vacuum.
- Equipment room requirements under ASHRAE Standard 15 (oxygen-deprivation sensor with all refrigerants).

Type III (low-pressure appliances)

Leak Detection:

- Order of preference of leak test pressurization methods for low-pressure systems (first: hot water method or built-in system heating/pressurization device, such as Prevac; second: nitrogen).
- Signs of leakage into a low-pressure system (such as excessive purging).
- Maximum leak test pressure for low-pressure centrifugal chillers.

Leak Repair Requirements:

- Allowable annual leak rate for commercial and industrial process refrigeration.
- Allowable annual leak rate for other appliances containing more than 50 lb of refrigerant.

Copyright Goodheart-Willcox Co., Inc.

Recovery Techniques:

- Recovering liquid at beginning of recovery process speeds up process.
- Need to recover vapor in addition to liquid.
- Need to heat oil to 130°F (90°C) before removing it to minimize refrigerant release.
- Need to circulate or remove water from chiller during refrigerant evacuation to prevent freezing.
- High-pressure cut-out level of recovery devices used with low-pressure appliances.

Recharging Techniques:

- Need to introduce vapor before liquid to prevent freezing of water in the tubes.
- Need to charge centrifugal through evaporator charging valve.

Recovery Requirements:

- Evacuation requirements for low-pressure appliances in each of the following situations:
  - Disposal.
  - Major vs. non-major repairs.
  - Leaky vs. non-leaky appliances.
  - Appliance (or component) containing less vs. more than 200 lb.
- Definitions of "major" and "non-major" repairs.
- Allowable methods for pressurizing a low-pressure system for a non-major repair (controlled hot water and system heating/pressurization device, such as Prevac).
- Need to wait a few minutes after reaching required recovery vacuum to see if system pressure rises (indicating that there is still liquid refrigerant in the system or in the oil).

Refrigeration:

- Purpose of purge unit in low-pressure systems.
- Pressure-temperature relationships of low-pressure refrigerants.

Safety:

- Equipment room requirements under ASHRAE Standard 15 (oxygen deprivation sensor with all refrigerants).
- Under ASHRAE Standard 15, need to have equipment room refrigerant sensor for R-123.

EPA Service Requirements

In addition to implementing certification requirements for technicians, the EPA also instituted regulations for performing service on the various types of refrigeration systems. Two of the most important services regulated are refrigerant recovery procedures and leak repairs.

Recovery Procedures

The Clean Air Act requires a technician to evacuate air-conditioning and refrigeration units to specific levels. These levels ensure that discharge of refrigerant into the atmosphere will not occur. Two levels of vacuum are legally acceptable. Newly manufactured recovery and recycling equipment must be EPA-certified for use with HFCs.

Recovery Procedures, Type I Certification

Recovery procedures depend on the size and type of equipment being serviced. With Type I certification, recovery devices may be divided into two types: self-contained and system-dependent recovery equipment.

A self-contained recovery unit has its own compressor to remove refrigerant from the refrigerating system. A system-dependent recovery unit depends on the compressor in the appliance or the pressure of the refrigerant in the appliance.

For small appliances (Type I), recovery equipment must recover 90% of the refrigerant when the compressor is operating. If the compressor is not operating, 80% of the refrigerant must be recovered.

Recovery Procedures, Type II Certification

Type II certification determines recovery methods by the type of refrigerant used and the amount of the refrigerant charge in the equipment. Required EPA evacuation levels for Type II certification are as listed in **Figure G-2**.

Recovery Procedures, Type III Certification

For Type III certification, chillers are initially recovered using liquid recovery. The process is completed through vapor recovery. Chiller systems usually contain a large quantity of liquid refrigerant. Therefore, a liquid recovery will be faster and will recover most of the refrigerant. Specific liquid pumps are designed for recovery of low-pressure refrigerants. Do not overfill cylinders more than 80% by weight else the cylinder may burst.

Recovery methods for Type III certification are determined by the type of refrigerant used and the amount of the refrigerant charge in the equipment. The recovery requirement for low-pressure equipment, when using equipment that was manufactured after November 15, 1993, is an evacuation level of 25 mm Hg absolute (25 mm Hg absolute = 2500 microns = 29 in. Hg).

Copyright Goodheart-Willcox Co., Inc.

Leak Repairs

As of January 1, 2019, the EPA has reduced the permissible leak rates on large equipment. Industrial process refrigeration equipment with a 50 lb or greater charge must be repaired and the leak rate verified to be less than 30% of the total charge amount per year. Commercial refrigeration equipment with a 50 lb or more refrigerant charge shall not have an annual leak rate of 20%. The threshold for comfort cooling equipment with a charge of over 50 lb is 10% of total charge per year. It is the duty of the technician to notify the equipment owner of the leak. The owner is required to repair the leak within thirty days.

Verification tests are required to demonstrate that the leak was successfully repaired.

- Initial verification tests are done before the system is recharged.
- Follow-up verification tests must be done when the system is normally operating.
- Periodic leak inspections must be done on systems depending on the type of equipment and charge amount. See **Figure G-3**.

The technician must provide the owner with an invoice documenting the amount of refrigerant added and the results of leak inspection and verification tests.

Recordkeeping

When selling CFCs, HCFCs, HFCs, and HFOs, wholesalers must record the certified purchaser's name, sale date, and amount of refrigerant purchased. This record must be kept for at least three years. The sale and service of ammonia, CO_2, propane, isobutene, R-441A, and ethane are exempt from these rules.

Technicians must keep records for appliances containing 5 to 50 lb of refrigerant. The technician must record the location of the appliance, date of recovery, type of refrigerant recovered, and the amount of refrigerant recovered. The technician must also record if the refrigerant was transferred for reclamation or destruction, the person it was transferred to, the amount that was transferred, and the date of transfer.

Evacuation Requirements		
Type of Appliance	Required Level of Evacuation (in. Hg vacuum)	
	Using Pre-1993 Equipment	Using Post-1993 Equipment
Very high-pressure appliance	0	0
High-pressure appliance, or isolated component of such appliance, with a full charge of less than 200 pounds of refrigerant	0	0
High-pressure appliance, or isolated component of such appliance, with a full charge of 200 pounds or more of refrigerant	4	10
Medium-pressure appliance, or isolated component of such appliance, with a full charge of less than 200 pounds of refrigerant	4	10
Medium-pressure appliance, or isolated component of such appliance, with a full charge of 200 pounds or more of refrigerant	4	10
Low-pressure appliance	25 mm Hg absolute	25 mm Hg absolute

Figure G-2. Required evacuation vacuum levels for various appliances. *US EPA*

Periodic Leak Inspection Frequency		
Type of Equipment	Full System Charge	Frequency of Leak Inspection
Commercial and Industrial Process Refrigeration	50–500 lb	Once per calendar year until owner can demonstrate that leak rate has not exceeded the threshold for one year
	over 500 lb	Once every three months until the owner can demonstrate that the leak rate has not exceeded the threshold for four consecutive quarters
Comfort Cooling	over 50 lb	Once per calendar year until the owner can demonstrate that the leak rate has not yet exceeded the threshold for one year

Figure G-3. Periodic leak inspection rates. *US EPA*

Copyright Goodheart-Willcox Co., Inc.

Appendix H: HVACR-Related Associations and Organizations

There are numerous HVACR-related associations and organizations. Many have broad goals, while others have a more focused aim. Many offer certifications and advanced training that may benefit particular career paths within the HVACR industry. Review the following list of organizations and associations. For additional information, refer to an organization's website.

Air Conditioning Contractors of America (ACCA). A nonprofit association for the indoor environment and energy services community that promotes professional contracting, energy efficiency, and healthy, comfortable indoor environments in the HVAC trades.

Air Conditioning, Heating, & Refrigeration Institute (AHRI). A trade association that represents manufacturers of HVACR and water heating equipment, advocates on behalf of its members at all levels of government, runs an equipment certification program, and functions as a resource for industry shipment data, education and workforce information, and research.

Air Movement & Control Association International Inc. (AMCA). A nonprofit association of the world's manufacturers of fans, louvers, dampers, air curtains, air flow measurement devices, ducts, acoustic attenuators, and other air-system components, AMCA operates with the mission to advance the health, growth, and integrity of the air movement and control industry.

American Boiler Manufacturers (ABMA). A nonprofit trade organization committed to the advancement, safety, advocacy, and enhancement of the commercial, institutional, industrial, and electricity-generating boiler and combustion equipment industry that provides business connections, industry developments, and emerging trends and advocates for key issues and common interests.

American National Standards Institute (ANSI). A nonprofit organization that provides standards for a variety of manufacturing and building sectors in order to promote the voluntary consensus of standards and conformity to assessment systems.

American Society of Heating, Refrigerating and Air-Conditioning Engineers (ASHRAE). An international organization that advances the arts and sciences of heating, ventilation, air conditioning, and refrigeration by conducting research, writing standards, and providing continuing education, certifications, and various publications.

American Solar Energy Society, Inc. (ASES). A nonprofit association of solar professionals and advocates aiming to inspire an era of energy innovation and lead a transition to a sustainable energy economy through conferences, education, and publications.

Associated Builders & Contractors, Inc. (ABC). A national construction industry trade association, primarily in the industrial and commercial sectors, that provides government representation, legal advocacy, education, workforce development, information on best practices, and business development.

Carbon Monoxide Safety Association (COSA). An organization that provides training, publications, and other resources on carbon monoxide, combustion analysis, and related topics.

Cooling Technology Institute (CTI). An organization with the aim to educate, research, and increase industry interest in evaporative heat transfer systems (EHTS), cooling towers, and cooling technology. CTI also provides product certification and establishes standard testing and performance analysis for cooling towers and related equipment.

Cryogenic Society of America Inc. (CSA). A nonprofit technical society serving those interested in cryogenics and the art and science of achieving extremely low temperatures through conferences, workshops, and publications.

Heating, Air Conditioning and Refrigeration Distributors International (HARDI). An organization for distributors of HVACR equipment, parts, and supplies that provides education, conferences, and advocacy before state and federal government and regulatory bodies.

Copyright Goodheart-Willcox Co., Inc.

HVAC Excellence. An organization that provides curriculum, programmatic accreditation, student outcome assessments, certification (professional, industry, government), and educator credentialing aimed at the HVACR industry.

Indoor Air Quality Association (IAQA). An organization that creates standards, funds research, provides advocacy to government agencies and NGOs, and educates through webinars, courses, videos, reporting, meetings, and publications on all issues pertaining to indoor air quality.

International Institute of Ammonia Refrigeration (IIAR). An organization that uses conferences, publications, and the sharing of knowledge and experience among manufacturers, designers, contractors, scientists, and trainers to advocate the safe, reliable, and efficient use of ammonia and other natural refrigerants in the refrigeration industry.

Mechanical Contractors Association of America (MCAA). An association of heating, air conditioning, refrigeration, plumbing, piping, and mechanical service firms that serves its members by providing educational material and programs to increase their level of technical and managerial expertise.

National Air Duct Cleaners Association (NADCA). A nonprofit association that uses standards, education, certification, marketing, and advocacy to promote the highest quality and ethical services regarding the inspection, cleaning, and restoration of HVAC systems.

National Air Filtration Association (NAFA). A nonprofit trade association representing and serving air filter and component manufacturers, sales and service companies, and HVAC and indoor air quality professionals through education, certification, publications, meetings, and technical seminars.

National Association of Home Builders (NAHB). An organization representing builders and remodelers of single-family and multifamily homes and individuals in closely related fields that provides education, produces the International Builders' Show, and advocates issues before government.

National Comfort Institute, Inc. (NCI). An organization that provides heating, air conditioning, plumbing, and electrical contractors with a focused offering of services and tools to help them improve their businesses, differentiate from others, grow, and become more profitable.

National Institute of Building Sciences (NIBS). A nonprofit, nongovernmental organization that supports advances in building science and technology to improve the built environment and brings together representatives of government, the professions, industry, labor and consumer interests, and regulatory agencies to identify and resolve problems and potential problems hampering the construction of safe, affordable housing.

North American Technician Excellence (NATE). A nonprofit program for HVACR technicians offering installation and service certification in a variety of specialty areas.

Partnership for Air-Conditioning, Heating, Refrigeration Accreditation (PAHRA). An independent, third-party organization in partnership between HVACR educators and the industry, PAHRA awards accreditation to programs that have met industry-validated standards in an effort to improve the quality of training offered and ensure competency levels.

Plumbing-Heating-Cooling Contractors Association (PHCC). An association working toward the advancement and education of the plumbing and HVACR industry for the health, safety, and comfort of society and the protection of the environment through technical training, business management practices, and legislative initiatives.

Refrigerating Engineers & Technicians Association (RETA). An organization dedicated to the professional development of industrial refrigeration operators and technicians through instructional material, certification programs, and conferences.

Refrigeration Service Engineers Society (RSES). An organization that provides comprehensive HVACR education and certification to advance proficiency of professional HVACR technicians and contractors.

Sheet Metal and Air Conditioning Contractors' National Association (SMACNA). A trade association promoting quality and excellence in the sheet metal and air-conditioning industry through voluntary standards and manuals and professional assistance in labor relations, legislation, research, safety, and business and project management.

Testing, Adjusting and Balancing Bureau (TABB). An HVAC organization providing specialty certification in indoor air quality, building commissioning, energy audit, and testing, adjusting, and balancing air duct systems.

Underwriters Laboratories Inc. (UL). An independent safety science company that promotes safe living and working environments by certifying, validating, and testing products, among other available services.

United Association (UA). An association of plumbers, fitters, welders, and service technicians representing local labor unions and providing training and certification.

Women in HVACR. An organization aimed to promote professional and personal growth of women in the HVACR industry.

Copyright Goodheart-Willcox Co., Inc.

Glossary

100% shutoff. A function of a gas furnace ignition control module. When the flame rod does not detect a flame, the control module closes both the gas valve and the pilot valve. (41)

100% shutoff with continuous retry. A function of a gas furnace ignition control module. When the flame rod does not detect a flame, the control module closes both the gas valve and the pilot valve, but then it attempts to reignite the pilot after waiting for a certain period. (41)

above-atmospheric-pressure element. A type of control device that closes an electrical circuit on temperature rise. Used to control refrigeration temperature. (16)

above gap. In an oil burner, the vertical distance between the center of the nozzle and the electrode tips. (42)

abrasives. Sand-like particles, often attached to paper or cloth, used to clean, smooth, and polish surfaces. (7)

ABS (acrylonitrile-butadiene-styrene). A type of black plastic pipe appropriate for non-pressure applications such as drainage, waste, and vent piping. (8)

absolute temperature scale. A temperature scale that uses absolute zero (the temperature at which all molecular motion stops) as its starting point. Examples include Kelvin and Rankine scales. (4)

absorbant. In an absorption refrigeration system, a substance that soaks up, or absorbs, a refrigerant and lowers their combined pressure. An absorbant will absorb the refrigerant when cool and release it when heated. (34)

absorber. A surface designed to absorb visible light, infrared radiation, and ultraviolet radiation in a solar collector. The surface is painted black to maximize heat absorption. (44)

absorption. A phenomenon in which one substance (an absorbant) attracts and combines with another substance (typically a refrigerant) to form a uniform solution. This is commonly used in absorption refrigeration systems. (34)

a/c. Air conditioning. (27)

ac motor. An electric motor that runs on alternating current. (15)

access port. A small valve opening, usually with a Schrader valve core, that is used for checking pressure. While a service port is located on a service valve, an access port is standalone and does not have a service valve or manual way of controlling the flow of refrigerant through the system. (10)

access tool. A tool that allows a technician to create a point in an HVAC system's ductwork from which to inspect and clean. (30)

access valve lock. A device installed on the access valve of a service valve to prevent access to the refrigerant circuit by unauthorized individuals. Access valve locks can serve as a method of preventing refrigerant theft and huffing. Keys and tools for access should be made available only to system owners and HVACR service technicians. (32)

accumulator. A storage tank in the suction line that collects liquid refrigerant from the evaporator and suction line and prevents it from flowing further along the suction line before vaporizing. (6)

ACH_{50}. The number of air changes when indoor pressure is held at –50 Pa WRT outdoors during blower door testing. (30)

acid test kit. A kit used for testing refrigerant oil for acidity. (26)

active recovery. A refrigerant recovery method that uses a recovery machine to draw the refrigerant out of a system in either vapor or liquid form. Active recovery is quicker and more commonly used than passive recovery. (11)

active solar energy system. A solar energy system in which energy is absorbed into a collector and then transferred from the collector to be used or stored. (44)

actuator. A controlled device that changes an input energy (fluid, thermal, electrical, etc.) into mechanical motion. Solenoids, motors with gear assemblies, control valves, and other devices can act as an actuator. (16)

adaptive defrost. A defrost system that measures the time it takes to defrost a system and then uses that information to determine the interval before the next defrost cycle. (24)

adiabatic compression. The process of compressing a vapor without removing or adding heat from the vapor's surroundings. This results in a rapid increase in temperature of the vapor. (5)

adiabatic expansion. A process in which a substance undergoes a large pressure and temperature drop without gaining or losing heat (Btu), such as passing out of a metering device. (50)

adjustable air band. A metal band on an oil burner that is used to regulate the amount of air the burner fan can draw in and blow through the air tube. (42)

adjustable wrench. A wrench with gripping jaws that can be moved to fit fasteners of different sizes. (7)

adsorption. A liquid or solid attracting and holding another substance on its outer surface. Often a gas or vapor is held in a condensed layer through physical attraction or capillary action onto a liquid or solid. For example, a drier adsorbs moisture from refrigerant. (20)

affinity. The tendency of a substance to absorb another substance. This characteristic is used in determining refrigerant and absorbant pairings in absorption refrigeration systems. (34)

Copyright Goodheart-Willcox Co., Inc.

air. An invisible, odorless, and tasteless mixture of gases that fills earth's atmosphere. (27)

air-bound. A condition in which a section or component of a hydronic system has trapped enough air to completely block water flow. (39)

air change. When the volume of air within a building is replaced with an equal volume of air. (30)

air changes per hour (ACH). A measure of how many times the entire volume of air within a defined space is replaced in one hour. (35)

air coil. A component in a heat pump system that absorbs heat from or releases heat to the surrounding air by circulating refrigerant. (40)

air conditioning (a/c). According to ASHRAE, "the process of treating air so as to control simultaneously its temperature, humidity, cleanliness, and distribution to meet the requirements of the conditioned space." (27)

air conditioning and refrigeration (ACR) tubing. A type of copper tubing, usually sealed with gaseous nitrogen, manufactured specifically for circulating refrigerant in air conditioning and refrigeration systems. (8)

air-cooled condenser. A condenser that uses the air movement of either natural convection or forced drafts to desuperheat, condense, and subcool a system's high-pressure refrigerant. (21)

air-cooling evaporator. An evaporator that is designed to cool the air in a conditioned space. (21)

air curtain. A steady stream of air created by a fan and used for separating two spaces from each other (often one conditioned space and one unconditioned space). (29)

air defrosting. The process of allowing the heat from the air in a conditioned space to melt the frost from evaporator coils. (21)

air filter. A device made of fibrous materials used to remove solid particulates, such as dust, pollen, mold, and bacteria, from circulating air. (28)

airflow friction chart. A graph of duct diameters, airflow rates, pressure drops from friction, and air velocities. (29)

air handler flowmeter. An instrument that measures the total airflow through a central HVAC system's air handler. (30)

air-purifying respirator. A passive respirator that removes dust and certain chemicals from the air. (2)

air scoop. A component designed to remove air from a hydronic system that uses deflectors to create turbulence in the flow of water causing air bubbles to merge and rise to the top of the chamber where they are vented. (39)

air separator. A component designed to remove air from a hydronic system that uses a wire mesh element to create a swirling motion in the circulating water causing the formation of tiny bubbles that merge and rise to the top of the chamber where they are vented. (39)

air-side economizer. A subsystem of an HVAC system used to regulate the introduction of cool outdoor air into a building for "free cooling" when outdoor climate conditions are optimal. Because the compressor does not run during economizer operation, far less electrical power is used. (33)

air-source heat pump (ASHP). A heat pump that uses the outside air as a heat source or a heat sink for producing the desired temperature in a conditioned space. (40)

air-to-air heat pump. A type of air-source heat pump that transfers heat between outside air and air inside a conditioned space using forced air as the heat distribution method. (40)

air-to-water heat pump. A type of air-source heat pump that transfers heat between outside air and air inside a conditioned space using a hydronic system as the heat distribution method. (40)

air tube. The passage through which air from an oil burner fan is blown into the combustion chamber of an oil-fired appliance. Also called *blast tube*. (42)

air vent. A float-operated valve that allows air to escape from a hydronic system while preventing water from leaking out and outside air from coming in. (39)

alkylbenzene (AB) lubricant. A refrigeration lubricant made from propylene and benzene that is used with CFCs, HCFCs, and blends that include CFCs and HCFCs. (9)

alternating current (ac). Electric current in which the direction of electron flow reverses or switches at regular intervals. In 60 Hz current, electrons reverse direction 120 times per second. (12)

ambient temperature. The temperature of the air surrounding an object. (4)

American Wire Gage (AWG). A standardized system of designating wire size based on a wire's diameter. For sizes 18 AWG to 1 AWG, the wire diameter increases as the AWG number decreases. For larger aught (/0) sizes, wire size increases as the numbers increase. (13)

ammeter. An instrument that measures current in amperes in a conductor. See also two types of ammeters: *in-line ammeter* and *clamp-on ammeter*. (17)

ampere (A). A unit used to measure the flow of electric current. One ampere equals the flow of one coulomb per second. May be referred to as *amps*. (12)

anhydrous ammonia. Ammonia that is free of water. (34)

annealing. A process of cooling a metal slowly from a high temperature to make the metal soft. (8)

annual fuel utilization efficiency (AFUE) rating. A measurement of furnace efficiency that compares a furnace's yearly or seasonal energy output to the energy input for the same time period. The higher the AFUE rating, the more efficient and cost effective a furnace is. (41)

anode. In electronics, a positively charged segment of a semiconductor consisting of a P-type material, such as on a diode. (14)

anti–short cycle control. A type of solid-state relay that will stop a compressor from cycling on before a preset time has passed after shutdown. (53)

Copyright Goodheart-Willcox Co., Inc.

apparent power. A circuit's calculated power value ($P = I \times E$), which does not take into account the effects of inductive reactance or capacitive reactance. The value is calculated in volt-amperes (VA). (13)

aquastat. A hydronic system control that measures the temperature of the boiler water and turns the burner or heating element on and off as needed to maintain the preset temperature. (39)

asbestos. A naturally occurring mineral that forms fiber bundles. It was once used in building construction for its strength and fire resistance but is no longer used because it is now known to be a cancer-causing agent. (28)

ash content. The amount of noncombustible contaminants in fuel oil. (42)

ASHRAE Standard 34. An ASHRAE standard that names refrigerants and assigns safety classifications according to their flammability and toxicity. (2)

aspect ratio. The ratio of a duct's wide side to its narrow side. (29)

atmosphere. The air surrounding the earth. This term also refers to atmospheric pressure at sea level, which is 14.7 psia (0 psig). (5)

atmospheric balancing. The process of bringing up to atmospheric pressure a part of an HVACR system that has been evacuated before opening it for service. This is commonly done by bypassing a small amount of vapor refrigerant through the gauge manifold until pressure reads 0 psig. Also called *pressure equalizing* or *balancing pressures*. (55)

atmospheric dust spot efficiency. A method used to measure the ability of an air filter to remove atmospheric dust by evaluating the flow rates on both sides of the filter and the quantity of the material it captures. (28)

atmospheric gas burner. A type of gas burner that uses the siphoning action of gas flow through its orifice to induce airflow through the burner without the need for a blower. (41)

atom. The smallest part of an element. (12)

atomization. The breaking up of a liquid into tiny droplets. In oil-fired appliances, fuel oil is atomized so that the fuel oil will vaporize rapidly and ignite in the combustion chamber. (42)

atomizing humidifier. A humidifier that sprays small water droplets into the air by mechanically flinging water against a diffuser or by forcing it through a nozzle. (35)

automatic defrost system. A defrost system in which a timer or control mechanism operates a defrosting process during a refrigeration system's Off cycle. (24)

automatic expansion valve (AXV). A refrigerant metering device operated by low-side pressure that throttles liquid refrigerant in the liquid line down to a constant pressure in the evaporator. Also called a *pressure-controlled expansion valve* or a *constant pressure valve*. (20)

auxiliary heat. A supplementary heat source in a heat pump system that is turned on when the heat pump cannot extract enough heat from the outside air, when the heat pump is in defrost mode, or as emergency heat when the compressor cannot operate. Auxiliary heat is often supplied by electric heating elements. (40)

available static pressure (ASP). The amount of friction or resistance used to design the longest duct run. (29)

Avogadro's law. A gas law stating that equal volumes of gases at equal pressures and temperatures contain equal numbers of molecules, regardless of the mass of the gases. (5)

axial flow fan. A propeller fan in which air leaves the fan along the direction the axle is pointing. (29)

azeotrope. A refrigerant blend with fixed boiling and condensing points. An azeotropic blend responds to pressure and temperature changes like a single refrigerant. Also called *azeotropic blends* and *azeotropic refrigerants*. (9)

back seated. A service valve position used for normal system operation. A back-seated service valve closes off the service port so pressure readings cannot be performed. (10)

backflow preventer. A hydronic system check valve installed in the makeup water line that prevents water from flowing back into the water main. (39)

BACnet. A common protocol or set of rules for software and hardware communication that allows controllers from one company to work with those from another company in the field of building control. BACnet is short for *building automation control network*. (45)

bacteria. Simple, single cell microorganisms responsible for the transfer of many diseases. (28)

baffles. Surfaces in and along air ducts that direct airflow through an evaporator and throughout a conditioned space cabinet. (21)

balance point. The point at which a heat pump's total heat output equals the heat loss of the conditioned space. If the ratio of heat pump output to heat loss is less than the balance point, auxiliary heat is required to maintain set point temperature. (40)

balanced pressure steam trap. A steam trap filled with a mixture of water and mineral spirits. The mixture vaporizes and condenses just below the temperature of steam to trigger the steam trap's valve. (39)

balancing. Sizing the ducts and adjusting the dampers to ensure that each room regulated by a forced-air HVAC system receives the correct amount of air. (30)

balancing valve. A hydronic system valve that adjusts the water flow to each terminal unit or zone in a system so that heat is evenly distributed throughout the system. Also called *globe valve*. (39)

bar. A unit of pressure equal to 14.5 psia, which is approximately equal to one atmosphere. (5)

barometric damper. A damper that opens and closes in reaction to static pressure. (36)

basin heater. An electric heater in the sump of a cooling tower used to prevent ice formation when a cooling tower must operate in very low temperature weather. (33)

Copyright Goodheart-Willcox Co., Inc.

below-atmospheric-pressure element. A type of control device that opens an electrical circuit on temperature rise. Used to control heating temperature. (16)

belt-driven compressor. An open-drive compressor that is connected to its drive motor by a belt and pulley system. (18)

bending spring. A tool used to make manually bending tubing easier and to reduce the danger of flattening the tubing while bending it. These may be placed on the outside or inside of a tube for bending. (8)

bid. An estimate of the scope and cost of a project. (1)

biflow bypass TXV. A type of biflow thermostatic expansion valve that has a built-in bypass passage regulated by a check valve, so that refrigerant in one direction is metered into a refrigerant coil and refrigerant in the other direction is merely bypassed through the check valve. (40)

biflow metering TXV. A type of biflow thermostatic expansion valve that meters refrigerant flowing in either direction. These TXVs require special installation considerations and are generally used in packaged heat pumps or systems in which the two refrigerant coils are in close proximity to each other. (40)

biflow thermostatic expansion valve. A type of thermostatic expansion valve (TXV) that allows refrigerant to flow in both directions in a heat pump system. There are two different types of biflow TXVs. See *biflow bypass TXV* and *biflow metering TXV*. (40)

bimetal coil. A thermostatic control made of a coil of two different metals that expands and contracts with changes in temperature. These can be used to energize and de-energize switches by attaching a set of contracts or a mercury switch to the movable end of the coil. (16)

bimetal device. A device made of two different metals bonded together and formed into a particular shape. Temperature changes cause the metals to contract or expand, which makes the device bend in the desired direction. (16)

bimetal disc. A thermostatic control that consists of a concave disc composed of two different metals. The disc is dished in one direction when it is cooled and snaps into a dished position in the opposite direction as it warms. By adding electrical contacts to the dished portion, it can act as an electrical switch. (16)

bimetal steam trap. A steam trap that contains two dissimilar metal strips bonded together. Temperature changes cause the bimetal strip to bend in one direction or the other to trigger the steam trap's valve. (39)

bimetal strip. A thermostatic control made of two different metals bonded together and formed into a strip that reacts to different heat conditions. With electrical contacts attached to an end, it can operate as a temperature-responsive electrical switch. (16)

bioaerosols. Airborne microorganisms, such as viruses, bacteria, fungi, protozoa, mold, rust, dust mites, mildew, and yeasts. (28)

biocide tablet. A tablet used to prevent the formation of microorganisms in locations containing water. A common application of a biocide tablet is in the condensate pan of an indoor unit of a ductless split system. (31)

blank-off plate. A sheet metal plate that supports an evaporator coil and blocks off areas of the plenum so that all the air passing through the plenum is directed through the evaporator coil. (32)

blast chiller. A commercial refrigeration system that cools a large amount of cooked hot food rapidly and uniformly without freezing it. (47)

blast freezer. A commercial refrigeration system that cools and freezes a large amount of cooked hot food rapidly and uniformly. Also called *shock freezer*. (47)

bleed resistor. A high value resistor that slowly discharges a capacitor when power to the capacitor's circuit is turned off. When electrical voltage is applied during the On cycle, a bleed resistor acts as a virtual open switch (as if it was not even present in the circuit). (17)

blowback. The ignition of a large amount of vaporized fuel oil that blows soot backward out of the combustion chamber. (42)

blowdown. Cooling tower water that is intentionally drained for the purpose of reducing certain mineral concentrations in the water. (33)

blower. A motor-driven fan used to circulate air. (38)

blower door testing. A procedure used to determine the airtightness of a building's envelope and to find air leaks in the building. This process uses a fan to create a pressure difference between outdoors and a building's interior and the measurement of airflow. (30)

blown fuse. An electrical fuse in which the conductive element inside the fuse has melted to open the circuit and prevent excess current flow. (16)

boiler. A closed vessel that heats water for circulation through a hydronic system. (39)

bolt. A headed, threaded fastener designed to screw together with a nut. (7)

bonding. The creation of a continuous electrical connection of all the metal parts in an electrical system. (13)

bonnet. The sheet metal chamber in a furnace where heat collects before being distributed. The bonnet contains a furnace's heat exchanger. (41)

booster compressor. The name commonly given to the first compressor in a cascade system. (18)

booster pump. A pump used to move fuel oil from the main storage tank to a fuel oil accumulator or reservoir tank nearer to the oil burner. (42)

bore. Cylinder diameter, such as in a reciprocating compressor and referenced when determining its volume of vapor for calculating the heat-removing capacity of the compressor. (51)

bottom freezer. A refrigerator-freezer in which the frozen food compartment is located below the fresh food compartment. (23)

Copyright Goodheart-Willcox Co., Inc.

Bourdon tube. A thin-walled tube of elastic metal that is bent into a circular shape and used in pressure gauges. As pressure inside the gauge increases, the tube straightens and moves the needle on the gauge. (10)

box end wrench. A wrench with an enclosed gripping head that fits over a nut or bolt head. Also called a *box wrench*. (7)

Boyle's law. A gas law describing the inverse relationship between pressure and volume, provided temperature remains constant. If temperature remains constant, a pressure increase corresponds to a decrease of volume, or a pressure decrease corresponds to an increase of volume. (5)

brazing. A process of joining metal objects with a filler metal that has a melting point above 840°F (450°C). (8)

breaker strips. Plastic strips that connect a refrigerator cabinet's outer shell to the liner. (26)

brine solution. A water solution to which substances have been added to raise its boiling temperature and lower its freezing temperature. (21)

British thermal unit (Btu). A US Customary unit of heat that is equivalent to the quantity of heat required to raise the temperature of 1 lb of water by 1°F. (4)

brushes. Devices composed of conductive materials used in an electrical generator to transfer the flow of electricity from the slip rings to an external circuit. Also used in some dc motors. (12)

bubble point. The temperature at which a liquid zeotrope first begins to boil. See *dew point* and *temperature glide*. (9)

bubble solution. A specialized leak-detection solution or a solution of soap and water that indicates a leak in tubing by bubbling as leaking vapor escapes the system. (10)

building control system. A master system that controls all of the individual energy management systems or subsystems in a building or campus. (45)

building inspector. Someone who reviews construction work to ensure that the construction adheres to the applicable building codes. (1)

building-integrated solar module. A solar module that is used as part of a building's material, not added as a separate feature. (44)

building-related illness (BRI). A diagnosable illness caused by exposure to airborne agents. (28)

built-up terminals. Electrical terminals that are bolted to a hermetic compressor dome. Built-up terminals make it easier for technicians to install replacement terminals if needed. (15)

burnout. A condition in which the insulation of an electric motor deteriorates due to overheating. This may be due to internal problems, such as shorted windings, a locked rotor, or bearing seizure. The burnout of a motor in a hermetic compressor can cause contamination problems throughout the refrigerant circuit. (26)

burnout filter-drier. A filter-drier designed for use after a hermetic compressor burnout. (55)

bushing. A cylindrical sleeve inside a motor bearing that is used to reduce the friction and wear on the motor shaft as it rotates. (17)

butterfly damper. A damper used to control airflow in round ducts. It consists of a disk that rotates on an axis along the duct's diameter. (29)

bypass damper. A damper in a bypass duct between supply and return plenums in forced-air zoned systems. (36)

bypass humidifier. A humidifier that humidifies air that is bypassed from the supply air plenum into the return air plenum. (35)

bypass plug. In an oil-fired heating system, a small plug that is threaded into the internal bypass between a fuel unit's inlet and return ports. The plug forces excess fuel oil to flow out of the fuel unit's return port, preventing it from flowing back to the fuel unit's inlet. (42)

cad cell. A light-sensitive semiconductor used to visually detect an oil burner's flame and communicate with a heating system's primary control unit. With no light applied to a cad cell, it has a high electrical resistance. When light is applied to a cad cell, its electrical resistance drops low. (42)

callback. A service call to repair a problem that had been improperly repaired. (3)

cap screw. A threaded fastener designed to hold parts together without using a nut. (7)

capacitance (C). The ability to store electrical energy in an electrostatic field, measured in farads (F). (12)

capacitive reactance. The opposition to alternating current as a result of capacitance, measured in ohms (Ω). Capacitive reactance causes voltage to lag behind current in a circuit. (13)

capacitor. A device designed to store an electrical charge. In HVACR, small capacitors are used in control circuitry, while larger capacitors are used to help start motors and increase motor efficiency. (12)

capacitor-start, capacitor-run (CSCR) motor. A single-phase induction motor that has a start capacitor and a run capacitor wired in series with the start winding. The start capacitor is only in the circuit during starting, and the run capacitor is kept in the motor circuit during full speed operation to improve the motor's efficiency. (15)

capacitor-start, induction-run (CSIR) motor. A single-phase induction motor that has a start capacitor wired in series with the start winding. The start capacitor helps to create high starting torque and drops out as the motor approaches full speed running mode. (15)

capacity check. For a commercial ice machine, a procedure that involves running through an ice production cycle, measuring temperatures, timing the length of the cycle, weighing the ice batch produced, and calculating the total daily production potential so these values may be compared with manufacturer specifications. (53)

capillary action. The movement of a liquid substance between two solid substances due to the molecular

Copyright Goodheart-Willcox Co., Inc.

adhesive forces between the solids overcoming the liquid's cohesive forces. (8)

capillary tube. A refrigerant metering device consisting of a length of seamless tubing with a small and precisely formed inside diameter. This tube acts as a constant throttle on the refrigerant flow and a constant pressure drop. (20)

carbon dioxide (CO_2). A gaseous, nontoxic combination of carbon and oxygen that results from combustion and respiration. (28)

carbon monoxide (CO). A deadly, odorless, colorless gas produced by incomplete combustion of fuel. (28)

carburizing flame. A torch flame that has too much fuel gas (often acetylene) and not enough oxygen. It usually generates a lot of smoke. (8)

career clusters. A career education organizational model, consisting of sixteen broad categories of employment fields, that was developed by states in conjunction with educators, employers, and professional organizations. (1)

cascade refrigeration system. A multistage refrigeration system that consists of two or more separate refrigeration subsystems with separate, isolated refrigerant circuits that work together to multiply cooling effect. (49)

Category I furnace. A negative-pressure, noncondensing furnace with a flue gas temperature of at least 140°F (60°C). Many furnaces used in residential heating are Category I furnaces. (41)

Category II furnace. A negative-pressure, condensing furnace that requires special vent materials. Category II furnaces are rarely used in residential heating. (41)

Category III furnace. A positive-pressure, noncondensing furnace that is typically vented with stainless steel piping. Category III furnaces are rarely used in residential heating. (41)

Category IV furnace. A positive-pressure, condensing furnace with a flue gas temperature that is less than 140°F (60°C). Category IV furnaces are high-efficiency furnaces with secondary heat exchangers. (41)

cathode. In electronics, a negatively charged segment of a semiconductor, consisting of an N-type material, such as on a diode. (14)

cavitation. The formation and implosion of bubbles in a flowing liquid that can cause internal damage to a system. This problem can occur in hydronic systems, primarily in circulating pumps. (39)

Celsius scale. A temperature scale used in the SI system. At sea level (atmospheric pressure of 14.7 psi), the boiling point of water is 100°C, and the freezing point of water is 0°C. (4)

center punch. A type of punch used to mark the center of a hole to be drilled or alignment points before dismantling a unit. (7)

central air-conditioning system. A centrally located system that is capable of providing heating, cooling, humidity control, ventilation, and air cleaning to multiple spaces. (32)

central humidifier. A humidifier that is incorporated into a central HVAC system through bypass ductwork or by being installed directly into the return or supply ductwork. (35)

centralized computer control. A building system controller that consists of one or more centralized computers that make control decisions based on operating data, programmed information, and data already stored in computer memory. (45)

centrifugal compressor. A compressor consisting of a rotor-operated impeller with radial blades and a volute casing. As the rotor spins, it flings refrigerant vapor outward, where it compresses against the volute casing. (18)

centrifugal force. A force that acts outward from the center of rotation. (18)

centrifugal switch. A normally closed electrical switching device mounted on the end of a motor shaft that disconnects the start windings from the motor circuit. The switch is opened and closed by centrifugal force, which increases as motor speed increases. (15)

certification. An industry-recognized credential that show a commitment to continued professional development. (1)

cfm_{25}. The airflow needed to obtain –25 Pa in the conditioned space when pressure testing a central HVAC system's ductwork. See *duct testing*. (30)

cfm_{50}. The measured airflow through a blower door fan when indoor pressure is held at –50 Pa WRT outdoors. This measurement is used to calculate the number of air changes per hour (ACH). See ACH_{50}. (30)

charge compensator tank. A storage vessel used by some heat pumps during the heating mode to store extra liquid refrigerant. (40)

charging. Adding refrigerant to a refrigeration system. The proper amount of refrigerant is typically specified in terms of its weight. (11)

charging cylinder. A small refrigerant cylinder, usually holding 5 lb of refrigerant or less, that is used for adding precise amounts of refrigerant, typically to domestic appliances. (11)

Charles' law. A gas law that describes the direct relationship between volume and temperature, provided the pressure remains constant. If pressure is held constant, the volume of a gas will increase if gas temperature rises, and the volume will decrease if temperature drops. (5)

check valve. A valve that permits fluid flow in only one direction. (22)

chest freezer. A freezer unit that has its door on the top of the unit. (23)

chiller. A cooling system that uses a loop of chilled water instead of forced air to provide cooling to a conditioned area. Sometimes called a *chilled water system*. *Chiller* may also sometimes specifically refer to the evaporator that chills the water. (33)

chlorofluorocarbons (CFCs). A group of refrigerants that are composed of chlorine, fluorine, and carbon. CFCs have

Copyright Goodheart-Willcox Co., Inc.

high ODP and GWP ratings and are a major cause of ozone depletion. (9)

circuit breaker. An electrical protection device that automatically opens a circuit when the current exceeds a predetermined level. The increased magnetic effect of the current surge causes a spring-loaded switch to trip and break the circuit. A circuit break can be reset for continued use, while a blown fuse must be replaced. (16)

circuit breaker. An overcurrent electrical protection device that automatically opens a circuit when the current exceeds a predetermined level. The increased magnetic effect of the high current causes a spring-loaded switch to trip and break the circuit. (13)

circulating pump. A motor-driven pump that circulates heated water through a hydronic system. (39)

clamp-on ammeter. An ammeter that senses and measures only alternating current based on the magnetic field produced by an alternating current as it flows through a conductor. Unlike in-line ammeters, clamp-on ammeters clamp around a single conductor using movable jaws and do not require breaking the circuit for measurements. (17)

Class 2 circuit. A circuit supplied by a power source that has an output no greater than 30 V and 1000 VA. (13)

Class A refrigerants. An ASHRAE toxicity grouping of refrigerants that are not known to be toxic at concentrations equal to or below 400 parts per million (ppm). (9)

Class B refrigerants. An ASHRAE toxicity grouping of refrigerants that are known to be toxic at concentrations equal to or below 400 ppm. (9)

Clean Air Act (CAA). A US federal law that seeks to limit ozone depletion and air pollution. Section 608 provides guidelines for recycling refrigerants and restrictions on releasing refrigerants into the atmosphere. (9)

clean room. A room in which the environment is highly maintained. The temperature, humidity, and air quality are tightly controlled to limit contamination from airborne particles. (30)

cleaning solvent. A chemical compound used to remove oil, grease, and sludge from a surface. (7)

cleaning tool. Any handheld tool that is used to clean surfaces in the ductwork of an HVAC system. These include brushes, scrapers, and agitation and vacuum devices. (30)

clearance space. The volume of space between the top of the piston head and the bottom of the valve plate when the piston is at top-dead-center (TDC) in a reciprocating compressor. (18)

client. A workstation from which a building control system is managed. It sends instructions to and receives information from the servers. (45)

climate. In reference to outdoor conditions, the long-term weather trends for a region. In reference to indoor environments, the conditions that are normally maintained in a conditioned space. (27)

climate zone. An area of land that has a common temperature range and yearly precipitation level. (46)

closed circuit. An electrical circuit that is complete, providing a continuous path for electrons to follow. (12)

closed-loop control system. A type of control system in which feedback from a measurement of the control point is fed to the controller for comparison with the set point in order to modify the system's reaction to offset. A sensor produces a signal based on the conditions in the controlled area and transmits it to the controller, which modifies the output accordingly. (16)

closed-loop cooling tower. A cooling tower arrangement in which there are two isolated streams of water. One water circuit flows through the condenser and half of a heat exchanger. Another water circuit flows through the cooling tower and the other half of a heat exchanger. The condenser water rejects its heat into the cooling tower water circuit through a shared heat exchanger. (33)

closed-loop ground-source heat pump system. A type of ground-source heat pump system that continuously circulates the same water or refrigerant. (40)

CO_2 test. A test that measures the amount of carbon dioxide in a furnace's flue gas to determine if complete combustion is taking place. (42)

coefficient of performance (COP) (of air-conditioning systems). The ratio of energy output to energy input. In air-conditioning systems, this represents efficiency using a numerical value with no units. Refer to *seasonal average COP*. (46)

coefficient of performance (COP) (of refrigerants). The ratio of refrigeration effect to heat of compression. Refrigerants with a high coefficient of performance produce their refrigerating effect more efficiently. (9)

cogeneration. The use of energy byproducts from one process as the primary energy source for another process. (34)

cold. The absence of heat, the result of the removal of heat. (4)

cold chisel. A metal tool with a beveled edge at one end used for cutting through or carving into a solid material. (7)

cold thermal energy storage (CTES). An energy storage system that cools the storage medium at night and uses the cooled medium at peak electrical demand times of the day. (44)

combination gas valve. A single gas valve that contains multiple components (such as a manual shutoff valve, multiple solenoid valves, and a pressure regulator) to control gas pressure and gas supply to the burners of a gas-fired heating system. (41)

combination (slip-joint) pliers. Pliers that have a pivot point allowing the span of the jaws to be adjusted. These are for general use but should not be used on nuts, bolts, or fittings. (7)

combination thermostat. A thermostat that can operate a cooling system and a heating system. Also called *heating-cooling thermostat*. (36)

combined gas law. A gas law that states that the ratio among a gas's pressure, volume, and temperature remains

Copyright Goodheart-Willcox Co., Inc.

constant. It combines the concepts of Boyle's law, Charles' law, and Gay-Lussac's law to show the interrelationship of gas pressure, volume, and temperature. Essentially, if a gas's temperature increases, its pressure or volume must increase proportionally. Also, if a gas's temperature decreases, its pressure or volume must also decrease. (5)

combined heat and power (CHP) plant. A power plant that produces electricity and useful steam. (34)

combined-flow. An evaporative condenser design in which there is a parallel flow of air and sprayed water over a condenser coil and a crossflow of air and water through the fill surface. (21)

combustion. A chemical process of rapid oxidation in which fuel and oxygen combine to produce heat and light. (41)

combustion air. A term referring to primary air and secondary air in a fuel-burning furnace (41)

combustion blower. A motor-driven fan that brings fresh air into a heating system's combustion chamber and expels combustion gases out through the heat exchanger and flue. (38)

combustion efficiency. A measure of a furnace's combustion quality, which is essentially its ability to achieve complete combustion. The following variables are measured to determine combustion efficiency: carbon dioxide (CO_2) content, oxygen (O_2) content, carbon monoxide (CO) content, fuel gas pressure, and stack temperature. (41)

combustion head. A plate with slots and holes that is designed to promote combustion in an oil-fired furnace by directing airflow into the combustion chamber. It is located at the end of an oil burner's air tube. (42)

comfort cooling system. A high-temperature range air-conditioning system that reduces the temperature and humidity in living and work spaces to a level comfortable for the occupants. (31)

Comfort-Health Index. The sensation associated with each temperature and the effects that each temperature have on human physiology and health. (27)

common terminal. One of three motor terminals on a single-phase hermetic compressor. The common terminal connects to a single line that joins one end of the start winding to one end of the run winding. (15)

common wire. See *grounded conductor*. (25)

commutator. A slip ring that is split in half by an insulating material with each end of the rotor attached to one half of the ring. In a dc generator, a commutator forces the current to flow in one direction, creating direct current. (12)

complete combustion. A form of combustion in which fuel is burned in the presence of excess oxygen to produce only heat, water, and carbon dioxide. (41)

compound gauge. An instrument for measuring pressures both above and below atmospheric pressure. Also called a *low-side gauge*. (10)

compound refrigeration system. A multistage system that has two or more compressors connected in series. (49)

compression chiller economizer. A system component in a centrifugal compressor chiller that improves system efficiency by subcooling high-side refrigerant. This is accomplished by metering high-side refrigerant so that some refrigerant flashes off into vapor and carries heat with it to the space between the first and second stages of a centrifugal compressor. (33)

compression rings. Piston rings that are designed to prevent pressurized refrigerant vapor from blowing past the piston and into the crankcase. (18)

compressor. A vapor pump that draws low-pressure refrigerant vapor from the evaporator and squeezes or compresses it to a high-temperature and high-pressure vapor and into the high side of the system. (6)

concentrating collector. A solar collector that uses either mirror-type concentrators or lens-type concentrators to reflect or bend the light/heat into a collector. (44)

condensate pump. A pump designed to move condensate from a system and into a drain. (21)

condenser. A component in a refrigeration system that receives hot, high-pressure refrigerant vapor from the compressor and cools the gaseous refrigerant until it condenses back to its liquid state. (6)

condenser capacity. The amount of heat a condenser can reject. (54)

condenser condensate line. A refrigerant line running from the outlet of the condenser to the inlet of the liquid receiver. (51)

condenser pressure. In an HVACR system, another name for *high-side pressure*, *discharge pressure*, and *head pressure*. (6)

condenser pressure regulator. An open on rise of inlet pressure (ORI) valve that opens when condenser pressure rises to a proper level and closes to block the flow of refrigerant from the condenser to the liquid receiver when condenser pressure drops too low. Commonly used for head pressure control in low ambient conditions. Also called *condenser holdback valve*, *holdback pressure valve*, *head pressure control valve*, and *limiter valve*. (22)

condenser splitting. A method of head pressure control in low ambient conditions in which a condenser is divided into two separate spaces: one space that is used as a condenser year-round (see *summer/winter condenser*) and the other space (see *summer condenser*) that is isolated and evacuated during low ambient conditions. (22)

condensing boiler. A boiler designed to condense combustion gases, which allows the circulating water to absorb additional latent heat from the combustion gases. Condensing boilers are over 90% efficient. (39)

condensing furnace. A high-efficiency furnace with an annual fuel utilization efficiency (AFUE) rating above 90%. Condensing furnaces use primary and secondary heat exchangers to extract enough heat from the combustion gases that they condense. (38)

conditioned space. A specific space in which an HVACR system regulates conditions, such as temperature, pressure, and humidity. (16)

Copyright Goodheart-Willcox Co., Inc.

conduction. The flow of heat between substances by molecular vibration. (4)

conductor. A material or substance that allows electrons to flow easily. Electrical conductors are typically made of metal. (12)

confined space. An area that is closed off from a larger space and is large enough for a person to enter and perform work therein. (2)

connecting rod. A reciprocating compressor component that connects the piston to the crankshaft. (18)

console air conditioner. An entire air-conditioning system mounted in a stand-up cabinet. Also called *vertical packaged terminal air conditioners*. (31)

contact point bounce. An unwanted effect that occurs when electrical contacts close through high amounts of pressure and then rebound from each other due to the force. Contact bounce is undesirable because it can create secondary arcs and reduce contact life. (36)

contactor. A heavy-duty type of electromagnetic relay that can handle high-current loads, such as motors. Contactors can have a variety of contact configurations, from a single set of contacts to five or six sets of contacts. (16)

contacts. The physical parts in switches and switched devices that touch to complete an electrical circuit. Also called *electrical contacts*. (14)

continuity. The condition that exists when there is an unbroken path between two points in an electrical circuit. (17)

continuous defrost timer. A defrost system in which a defrost timer continuously counts down to the next defrost cycle, regardless of whether the compressor is running or not. Such a system performs regular defrosting, but some of these cycles may be unnecessary. (24)

continuous duty. According to the NEC, operation at a substantially constant load for an indefinitely long time. (15)

continuous load. As defined by the NEC, an electrical load where the maximum current is expected to continue for 3 hours or more. (43)

continuous-cycle absorption system. An absorption system operated by the application of a limited amount of heat. The circulated refrigerant is evaporated by heat and subsequently reabsorbed, displacing the need for a compressor. (34)

contractual agreement. A legal agreement that specifies the terms of service, including initial repair work and follow-up maintenance. (3)

control circuit. A circuit that uses electrical or electronic devices to control current flow, causing loads in the power circuit to be either energized or de-energized. (14)

controlled device. A device that operates based on signals from a controller. Solenoids, contactors, relays, and other actuators are examples of controlled devices. (16)

controller. A circuit that responds to changes in the signals from sensors and issues signals to controlled devices. (16)

control point. The present condition as measured by a sensor in a conditioned area. (16)

control system. A collection of interacting components that work together to regulate the operation of a system. The basic components of a control system include sensors, controllers, and controlled devices. (16)

convection. The transfer of heat from one place to another by means of a liquid or gas. (4)

conventional boiler. A noncondensing boiler that operates at water temperatures above 140°F (60°C). (39)

cooling anticipator. In a thermostat, a high-value resistor wired in parallel with the bimetal coil temperature-sensing device that conducts current during the cooling system's Off cycle to produce heat that will trip the cooling system on several minutes before the conditioned area reaches the cut-in temperature. (36)

cooling degree days. A day in which the average temperature for a day is above 65°F (18°C). Cooling degree days and heating degree days are used to determine the heating or cooling needed for a given region. (27)

cooling tower. A structure that rejects heat from the cooling water of an HVACR system using the evaporation of water. (33)

corrosion. A chemical degradation of metal. In a hydronic system, corrosion occurs when the water is too acidic or when certain gases are dissolved in the water. (39)

coulomb. The quantity of electricity transferred by an electric current of one ampere in one second. A coulomb is equal to approximately 6.24×10^{18} electrons. (12)

counter electromotive force (cemf). The voltage induced in a running motor by the rotor's magnetic field that has a polarity opposite of the voltage applied to the stator. (15)

counterflow. A design in which two fluids flow in opposite direction of each other. This design is often used in cooling towers, evaporative condensers, and water-cooled condensers. (21)

counterflow cooling tower. A cooling tower in which air and water travel in opposite directions. (33)

CPVC (chlorinated polyvinyl chloride). A type of light beige or tan plastic pipe that may be used for hot and cold water lines, drains, and some furnace venting applications. (8)

cracked open. A service valve position where the valve stem has been turned just enough to lift the valve off the back seat. Cracking open a valve prevents a sudden pressure increase from damaging the gauge. Cracking open a service valve also allows refrigerant to flow through the system while providing system access through the service port. (10)

cracking. The slight opening of a valve, which causes the valve needle or plunger to leave its seat, allowing only a slow flow of fluid. (7)

crankcase. The portion of the compressor housing that supports the crankshaft. (18)

crankcase heater. An electric device on or in a compressor that supplies heat to the crankcase in order to evaporate any refrigerant that may be trapped in the oil or prevent

Copyright Goodheart-Willcox Co., Inc.

refrigerant inside the compressor from condensing into liquid. (18)

crankcase pressure regulator (CPR). A valve with an adjustable pressure setting that prevents crankcase pressure from exceeding a preset safe value. A CPR protects the compressor from higher than normal pressure vapor from the suction line. Also called *crankcase pressure-regulating valve*, *suction regulator valve*, *compressor low-side pressure control valve*, and *reverse metering, evaporator control valve*. (19)

crankshaft. A device used to change rotary (circular) motion into reciprocating (back and forth) motion and vice versa, as used in reciprocating compressors and automobile engines. (18)

crawl space. A type of building foundation that leaves just enough space between the floor and the ground to allow access. (37)

critical pressure. The minimum pressure required for a vapor to liquefy when it is at its critical temperature. (5)

critical temperature. The highest temperature at which a substance may be liquefied. A vapor above its critical temperature cannot be liquefied regardless of the pressure applied to it. (5)

critically charged. A refrigeration system with a refrigerant charge that is very precise and must remain at this level for effective, trouble-free operation. (53)

crossflow cooling tower. A cooling tower design in which air flows across the wet deck from side to side, while cooling water drops downward from above. Water and airflow *cross* each other's paths. (33)

cryogenic food freezing. A process of fast-freezing using liquid nitrogen or carbon dioxide to turn perishable fresh food into long-lasting frozen food. (47)

crystalline solar cell. A solar cell made from a thin slice of silicon known as a wafer. (44)

cumulative run-time defrost system. An efficient type of timed defrost system that determines the defrost intervals based on the amount of time the compressor runs. (24)

current. The flow of electrons through a conductor. (12)

current electricity. The type of electricity in which electrons are flowing through a conductor. To contrast, see *static electricity*. (12)

current-limiting fuse. A fuse that opens a circuit when the current exceeds its limit and the fuse heats up. Current-limiting fuses use temperature-sensitive resistors that close when they cool back down. (16)

current relay. A relay that is activated by a single-phase motor's high starting current running directly through the current relay's coil winding. Current relays are used to close and open a motor's start winding circuit to provide a motor with more starting torque. Also called *amperage relays*. (16)

customer relations. The interaction of a business with customers. Customer relations determine a customer's evaluation of a technician by the technician's job performance, appearance, and attitude. (3)

cut-in. The condition value at which a device begins operation. (16)

cut-out. The condition value at which a device ceases operation. (16)

C-value. See *thermal conductance*. (37)

cylinder head. A metal plate positioned on top of the valve plate and bolted to the cylinder block. The cylinder head holds the valve plate in position and seals the cylinder. (18)

cylinder unloading. The disabling or reducing of a reciprocating compressor's cylinder pumping ability. Cylinder unloading can be used to reduce the load during startup or to decrease system capacity in order to reduce refrigeration effect and lower power consumption. There are several different methods of cylinder unloading. (33)

Dalton's law. A law stating that the pressure of a mixture of gases is equal to the sum of the pressures of each gas. (5)

deaeration. The release of gases dissolved in a liquid. In a hydronic system, deaeration can reduce corrosion caused by gases dissolved in the water. (39)

deep vacuum. An evacuation method that uses a vacuum pump to pull a vacuum of 250 microns or less on a refrigeration system in order to dehydrate the system. (11)

defrost timer. An electric control device that starts and stops an HVACR system's defrost cycle. (21)

degree days. A measure used to determine the heating or cooling needed for a given region. (27)

dehumidifier. A device that decreases relative humidity by condensing moisture out of the air. It uses a cooling coil over which air is blown to condense moisture out of the air as it comes in contact with the cold surface. (35)

dehydration. The drying of food. (23)

demand defrost. A defrost control system that uses sensors to measure heat pump system variables (such as the temperatures of the discharge line, liquid line, indoor coil, and outdoor coil) in order to keep defrost cycle times to a minimum. (40)

demand defrost controller. A type of domestic refrigeration defrost control device that activates a defrost cycle based on the number of times the cabinet door is opened. (24)

demineralized water. Water that has been treated to remove minerals. (35)

density. A substance's mass per unit of volume, usually measured in lb/ft^3 or kg/m^3. (4)

desiccant. A substance that collects and holds moisture. In a dehumidification system, a hygroscopic substance that is used to adsorb moisture from the air. (35)

device pressure losses (DPL). Pressure losses in a duct system caused by devices other than ducts. (29)

dew point. The temperature below which water vapor in the air will start to condense, or at which the air has 100% relative humidity. (27)

dew point (of refrigerants). The temperature at which a vapor zeotrope first begins to condense. See *bubble point* and *temperature glide*. (9)

Copyright Goodheart-Willcox Co., Inc.

diac. A solid-state device that allows current to flow in both directions. For current to flow through a diac, the applied voltage must reach or exceed the diac's breakover voltage. (14)

diagonal pliers. A type of pliers with angled jaws designed to make nearly flush cuts. Commonly used in electrical work. (7)

dielectric. An insulating material, such as paper, mica, or ceramic, used in a capacitor to separate conducting surfaces. (12)

dielectric strength. A measure of the amount of electrical current that a refrigeration lubricant can withstand without breaking down. Lubricants should have a minimum value of 25,000 volts. (9)

differential. The number of units (the difference) between a control system's cut-out value and cut-in value. (16)

differential adjustment. An adjustment built into a temperature or pressure control that increases or decreases the difference between the cut-in and cut-out values. This adjustment may change just the cut-in value, just the cut-out value, or both values equal amounts in opposite directions. (16)

diffuser. A nonadjustable fixture designed to evenly distribute the flow of air. (29)

digital charging scale. An electronic scale on which a refrigerant cylinder is placed to measure the amount of refrigerant entering or leaving the cylinder by tracking the cylinder's weight. (10)

diode. A solid-state device composed of a P-type material and an N-type material. Electrons will flow through a diode in only one direction, from the cathode to the anode. A diode functions as a check valve for electrons. (14)

DIP switches. *Dual in-line package* switches. Small switches grouped together in a single package. These are often used on circuit boards to manage system settings on a thermostat subbase or air handler control board. (36)

direct-acting reversing valve. A type of reversing valve that uses the direct action of the solenoid plunger to move the piston and sliding section of tubing inside the valve. (40)

direct current (dc). Electric current in which electrons flow in only one direction. Direct current is the type of current produced by batteries. (12)

direct digital control (DDC). A control system that utilizes multiple digital and analog inputs and outputs in the form of low-voltage or low-current signals connected to a microprocessor to operate an HVACR or automated building system. (16)

direct-drive compressor. An open-drive compressor that is driven by a motor connected directly to the compressor by a coupling between their shafts. (18)

direct-exchange (DX) heat pump. A type of ground-source heat pump that circulates refrigerant through tubing buried underground. (40)

direct expansion evaporator. An evaporator into which refrigerant is fed at the same rate that it evaporates. (33)

direct-fired. A term describing commercial absorption systems that are directly heated by a burner or other heating element. To contrast, see *indirect-fired*. (34)

direct radiant heat. An electric heating system in which the heating elements are mounted in a fixture that focuses the heat energy emitted by the elements on the objects to be warmed. (43)

direct return hydronic system. A type of two-pipe hydronic system with terminal units along branches of varying lengths. The terminal unit that is closest to the boiler has the shortest length of supply and return piping, and the terminal unit that is farthest away from the boiler has the longest length of supply and return piping. (39)

direct-spark ignition (DSI) system. A type of gas furnace ignition system that uses an electric spark to ignite the gas burners. (41)

direct-venting system. A two-pipe venting system for a furnace. One pipe is dedicated to venting flue gases, and the other pipe is dedicated to bringing in fresh air for combustion. (41)

dirty sock syndrome. A foul odor emanating from room registers that is caused by the growth of mold and bacteria on the indoor coil of a heat pump system. (40)

discharge line pressure switch. A control device used to sense discharge line pressure and opens on a rise in pressure to turn off the system and protect the compressor from dangerously high head pressure. (19)

discharge line thermostat. A control device used to sense discharge line temperature and opens on a rise in temperature to turn off the system and protect the compressor from dangerously high temperature. (19)

discharge pressure. In an HVACR system, another name for *high-side pressure*, *condenser pressure*, and *head pressure*. (6)

discharge service valve (DSV). A high-side service valve connected directly to a compressor at its outlet, considered a compressor service valve. During normal operation, hot, high-pressure refrigerant vapor flows through a DSV. (10)

dispensing freezer. A commercial refrigeration system that cools or fast-freezes and dispenses liquid mixes into soft serve or batch ice cream, shakes, or frozen beverages. (47)

dissolved air. Air trapped between molecules of circulating water in a hydronic system. Air scoops or air separators can be installed to reduce the amount of dissolved air in a system. (39)

distillation quality. The ability of a fuel to vaporize. Used to describe fuel oil in oil-fired heating systems. (42)

distributed system. In commercial refrigeration, a unit containing control devices and multiple compressors that circulate refrigerant through remote condensers and the evaporators in nearby conditioned spaces. (47)

distributor. A device that splits the flow of refrigerant into several paths. Often installed between a refrigerant metering device and evaporator and used to reduce pressure drop across a large evaporator. (20)

Copyright Goodheart-Willcox Co., Inc.

DOP HEPAP Method. An efficiency test used mainly with high-efficiency air filters. (28)

doping. The addition of impurities to a pure semiconductor to change its conduction traits to make into a P-type or N-type material. (14)

double-cut file. A type of file that has teeth cut in two directions, used to remove metal quickly. (7)

double-effect absorption system. An absorption system with two generators: one primary and one secondary. The secondary, smaller, low-temperature generator can recover some of the waste heat from the primary generator or it can absorb solar heat or waste heat from an industrial process. (34)

double flare. A flare made with a double thickness of tubing metal, recommended only for larger size tubing with a diameter greater than 5/16". (8)

downflow furnace. A furnace design in which return air is taken in from the top and forced downward around the heat exchanger. It is commonly used in houses where the ductwork runs below the level of the furnace. Also called *counterflow furnace*. (38)

draft. In a combustion heating system, the movement of flue gas. Draft affects combustion as it allows for the supply of oxygen for burning. It also affects system efficiency regarding heat transfer in a heat exchanger. Faster draft reduces heat transfer, and slower draft increases heat transfer. (42)

draft gauge. A gauge used to measure the air pressure of the flue in a combustion heating system. (42)

draft regulator. A device installed in a flue pipe outlet that regulates the intake of indoor air into the flue to moderate or stabilize the flow of flue gas. Draft regulators are only used in certain types of flues (Class A and B) and can operate different ways: thermostatically, electrically, or barometrically. (41)

draft test. A test used to determine the rate of flue gas flow in a combustion heating system. Draft is typically low pressure, so it is measured in inches of water column (in. WC). A draft test can be measured in the flue or in the combustion chamber. See *flue draft test* and *overfire draft test*. (42)

drainback system. In an active liquid-based solar heating system, a system design that uses gravity to drain liquid from the solar collectors whenever the pump is off. (44)

drift. The loss of a cooling tower's water when it is broken into droplets small enough to be caught in a draft and carried away between the louvers. (33)

drift punch. A type of punch used to align holes in mating surfaces so that a fastener can be inserted. (7)

drip leg. A piping arrangement designed to trap and collect possible moisture or sediment that may flow with fuel gas. (41)

dry-base boiler. A boiler in which the area under the combustion chamber is dry and the water is contained in an area above the burner. (39)

dry-bulb temperature. The air temperature that does not take into account the effect of humidity in the air. (27)

dry ice. Carbon dioxide (CO_2) frozen solid. (48)

dry underfloor radiant heating system. A hydronic radiant heating system that consists of tubing attached to a wood floor or subfloor. (39)

dual-pressure regulator. A control valve with two pilot pressure regulators. (20)

dual-voltage motor. A motor that has its stator windings arranged in pairs so that it can be used with two different voltages. Three-phase motors are typically dual-voltage motors. Wire the stator windings in series for high voltage or in parallel for low voltage. (15)

duct. A channel or tube for conveying air in a heating and cooling system. (29)

duct blaster. An instrument used for duct testing that pressurizes the ductwork of a central HVAC system using a variable-speed fan and measures precise leakage with gauges. (30)

duct booster. A fan placed in series with a run of ductwork that operates to increase airflow when a duct is too small or too long or has too many elbows. (30)

ductboard. A compressed fiberglass panel that can be easily cut with a knife and formed into a square or rectangular shape for making ductwork or plenum. (29)

duct heater. An array of electric heating elements contained in a single unit that can be installed in a run of ductwork. (43)

ductless split system. A split air-conditioning system that does not use forced-air ductwork as a means of distributing cooled air. Like a traditional split system, a ductless split system has a condensing unit (compressor and condenser) outside a building that is connected by tubing to a cooling coil (evaporator) inside the building. Arrangements and number of indoor units vary by installation. (31)

duct sweeper. A cleaning tool used to release dust, mold, and mildew from the sides of ducts by rotating through ductwork. (30)

duct testing. Pressurizing a central HVAC system's ductwork and taking measurements to determine the amount of leakage and to locate duct leaks. (30)

dust. Small particles (1–200 microns) that become temporarily airborne from wind, a sudden earth disturbance, or mechanical work on a solid substance. (28)

eccentric. A shaft section that is larger and has a different center than the rest of the shaft. (18)

eccentric reducer fitting. A fitting used to join tubing of different sizes in a hot-water hydronic system. The fitting offsets the centerlines of the differently sized tubes to reduce the danger of air pockets forming. (39)

eddy currents. Small circular fluid patterns. In a conditioned space cabinet, these could be airflow patterns that disturb proper airflow. (21)

Copyright Goodheart-Willcox Co., Inc.

effective latent heat. The amount of heat absorbed from a conditioned space cabinet and evaporator. (50)

effective length. The length of a duct run determined by adding the physical length of the ductwork to effective length values for each fitting in a duct run. (29)

effective temperature. The combined effect of dry-bulb temperature, wet-bulb temperature, and air movement that provides an equal sensation of warmth or cold (27)

ejector. A domestic ice maker component that pushes ice out of its mold and into a storage bin. (24)

elbow. A part of the duct system with a bend, often 90°. (29)

electrical circuit. A path for electrons to flow from a power source, through conductors, across a load, and back to the power source. (12)

electrical load. Any device that consumes electricity to perform work, such as a motor. (12)

electric baseboard heating unit. A convection heating unit that consists of an electric heating element in a casing that is mounted close to the floor on a wall, usually under a window. (43)

electric evaporator pressure regulator (EEPR). An EPR that uses a stepper motor to proportionally modulate its valve position in reaction to evaporator temperature. (22)

electric furnace. A furnace that consists of a central air handler with electric heating elements that are used to warm circulating air for a conditioned space. (43)

electric heat defrost. A method of defrost in which electric heating coils installed in an evaporator (or air-source heat pump's outdoor coil), around it, or within the refrigerant passages can be energized to melt ice and frost buildup. (21)

electric heating element. A conductor through which electric current is passed in order to produce heat. There are three basic types of electric heating elements: open wire, open ribbon, and tubular cased wire. (43)

electric interlock. A safety device that prevents operation of certain devices unless certain conditions are met. In a gas furnace, these are safety devices that prevent the ignition control module from opening the gas valve or turning on the indoor blower until all proper operating conditions are met. (41)

electricity. The flow of electrons from one atom to another. (12)

electric radiant heat. A system that uses electric heating elements to radiate heat that primarily warms objects instead of air. Electric radiant heat is generally classified as direct or indirect. (43)

electric resistance heating. The process of producing heat by conducting electricity across electric heating elements. (43)

electrode gap. In an oil burner, the distance between the ends of the electrode tips. (42)

electrodeposition. A process in which metallic particles are applied to another metal surface (conduction plate) using an electric current. This process bonds the surface material to the metal conduction plate. (44)

electromagnet. A magnet created by the application of electric current to a conductor coiled around a piece of soft iron. (12)

electromagnetic interference (EMI). Electrical noise that can disrupt electronics, such as the ignition control module on a furnace. (41)

electromagnetism. The magnetic effect caused by current flowing through a coil of wire. (12)

electromotive force (emf). The electrical force or electrical pressure created by a potential difference in atomic charges between two points. Also called *voltage*. (12)

electron. A negatively charged subatomic particle that orbits around the nucleus of an atom. (12)

electronic air cleaner. An air cleaning device that puts a static electrical charge on all particles in the air that pass through it. These particles are then attracted to collector plates with an opposite electrical charge. (28)

electronically commutated motor (ECM). A programmable, brushless dc motor with an electronic control module that controls voltage to the stator windings. ECMs use permanent magnets for their rotors. (15)

electronic expansion valve (EEV). An expansion valve metering device that uses an electric operator instead of the diaphragm power assembly of the TXV or the spring assembly of the AXV. (20)

electronic leak detection. A leak detection method that uses an electronic sensor capable of detecting very small leaks of halogenated refrigerant. (10)

embrittlement. A weakening of metal caused by long-term corrosion, which can lead to structural failure along seams, under rivets, and at tube ends. (39)

emissivity. The relative ability of a surface to allow light rays to pass through. (37)

end bell. The caps or plates at either end of a motor frame that house the bearings and support the rotor. (15)

endplay. The axial movement of a motor shaft as it rotates. (17)

end switch. An electrical switch often used as a limit switch that is connected to the end of a motor's shaft. In furnaces, an end switch may be used to detect combustion blower operation in a furnace. It is attached to the end of a damper motor shaft and closes when the damper has turned open a certain amount or angle. (41)

energy. The ability to effect a change in matter. (4)

energy audit. The process of evaluating a building's energy consumption and identifying methods of reducing energy cost and usage. (45)

energy auditor. Someone who inspects and tests a building and then prepares a report summarizing the current energy usage of the building and recommends ways to reduce energy usage. (1)

Copyright Goodheart-Willcox Co., Inc.

energy conservation. Reducing the amount of energy used for a particular process. In HVACR, this includes replacing older systems with more efficient systems, correctly installing equipment, using proper service techniques, performing preventive maintenance, and upgrading existing systems and buildings to improve their efficiency. (46)

energy efficiency ratio (EER). A performance ratio that expresses an air conditioner's cooling capacity in Btu/hr for each watt of power consumed. (46)

energy recovery ventilator (ERV). A mechanical ventilation system that passes incoming fresh air and outgoing stale air through a series of parallel passages. As each air stream passes through the ERV, heat and humidity are exchanged, so the incoming air is closer to the temperature and humidity level of the outgoing air. (28)

Energy Star. A label given to buildings and appliances built according to a set of US Department of Energy (DOE) guidelines that promote increased energy efficiency. (46)

energy use intensity (EUI). The annual energy use per square foot of a commercial building in a certain climate zone. The EUI is calculated by dividing energy consumption in Btu by the square footage of conditioned space. (45)

enthalpy. The total amount of heat in a substance, calculated from an accepted reference temperature. For water calculations, the reference temperature is 32°F (0°C). For refrigerant calculations, the accepted reference temperature is –40°F (–40°C). On psychrometric charts, enthalpy is the total heat content in the air sample. (4)

enthalpy control. A control feature for air-side economizers that prevents or stops economizer operation if outdoor relative humidity is too high. Since indoor comfort relies not only on temperature but also on humidity, air's moisture content is taken into account for economizer operation. In this case, the word *enthalpy* refers to heat content. A certain number of Btus must be removed from air to condense moisture from the air. (33)

entrained air. Air in a hydronic system consisting of small air bubbles that travel along with the circulating water. Entrained air can be removed with air scoops and air separators. (39)

Environmental Impact Assessment (EIA). In the HVAC industry, this is a government review process that is often used to determine how a water-source heat pump may affect the quality of lake, stream, or pond fish life and habitat. (40)

Environmental Protection Agency (EPA). A US governmental agency that enforces the rules for working with refrigerants. All HVACR technicians must be certified by the EPA. (9)

enzymes. Specific types of proteins in food that trigger organic change. (23)

epoxy repair kit. A repair kit containing all the materials (sandpaper, surface cleaner, resin, and hardener) needed to patch a small hole in an aluminum evaporator. (26)

epoxy resin. A polymer substance used to repair small leaks in a refrigeration system. One-part epoxies require the use of heat to harden, while two-part epoxies come with a hardener that is mixed with the epoxy at room temperature. (11)

equalizer. A small external tube connecting the suction line at the evaporator outlet to a chamber inside the expansion valve, just below the diaphragm. This tube is used to balance pressure and compensate for any pressure drop across an evaporator in order to have the correct refrigerant flow through the valve. (20)

equivalent temperature. Temperature that represents how warm the combination of humidity and temperature feels to the occupant of a space. (27)

estimator. Someone who produces a project bid by calculating the cost of a project's equipment and material, time and labor needed, and cost of permits and inspections. (1)

eutectic plate. A thin, rectangular tank containing an evaporator surrounded by a solution that freezes at a desired temperature. Primarily used in truck or trailer refrigeration. (48)

eutectic salts. A combination of inorganic salts, water, and various elements formulated to freeze at a desired temperature. (44)

evacuated tube collector. An efficient type of solar collector that uses tubes containing fluid contained within slightly larger glass tubes. The glass tube is sealed and the air between the tubes is removed, creating a vacuum. (44)

evacuation. The removal of all vapors, gases, and fluids from a refrigeration system. The two main methods of evacuation are deep vacuum and triple evacuation. The process of *pulling a vacuum* (11)

evaporative condenser. A condenser that uses drafts from fans to aid in evaporating a water mist on and around the refrigerant-carrying tubes of the condenser to condense and subcool high-side refrigerant. (21)

evaporative cooling. The natural cooling effect of evaporation, used to cool a space or objects. (34)

evaporative humidifier. A humidifier that adds moisture to the air through evaporation. (35)

evaporator. A component in a refrigeration system where low-pressure refrigerant liquid vaporizes and absorbs heat. (6)

evaporator pressure regulator (EPR). A pressure-regulating valve that restricts the flow of refrigerant coming out of the evaporator to maintain a set minimum pressure in the evaporator while the refrigeration system is operating. It maintains a higher pressure than in the suction line, so its evaporator can operate at a higher temperature than other evaporators on a shared suction line. Also called *holdback valve*, *two-temperature valve*, and *constant pressure valve*. (22)

Copyright Goodheart-Willcox Co., Inc.

evaporator pressure. In an HVACR system, another name for *low-side pressure* and *suction pressure*. (6)

excelsior. Fine curled wood shavings. An HVAC application of excelsior is as fibers formed into a tight lattice wall used in a greenhouse as part of an evaporative cooling system. (34)

excess air. Any secondary air that exceeds the amount of air necessary for complete combustion in a furnace. (41)

exfiltration. The natural leakage of inside air out of a building through doors, windows, and other construction joints. (28)

exosphere. The outermost layer of earth's atmosphere that extends outward from the edge of the thermosphere to a distance of 6,200 miles, as it gradually blends with space. (27)

expansion steam trap. A steam trap that has an internal material that expands and contracts with temperature change to trigger the steam trap's valve. (39)

expansion tank. In a hydronic system, a tank that helps maintain a stable system pressure by storing water as it expands and contracts due to temperature changes. Also called a *compression tank*. In a secondary loop refrigeration system of a commercial refrigeration system, a cylinder containing a pressure responsive bladder that is used to account for changes in secondary loop pressure. (39)

expendable refrigerant. A refrigerant that typically has a very low boiling temperature and is used only once in a system for purposes such as freezing food. (9)

expendable refrigeration system. A refrigeration system in which the refrigerant is discarded or released into the atmosphere after it has evaporated. Also called an *open-cycle refrigeration system* or *chemical refrigeration system*. (9)

external static pressure (ESP). The pressure difference between a blower's inlet and outlet. (29)

Fahrenheit scale. A temperature scale used in the US Customary system. At sea level (atmospheric pressure of 14.7 psi), the boiling point of water is 212°F and the freezing point of water is 32°F. (4)

fan convector. A type of terminal unit in a hydronic system that uses a fan to blow air across the surface of the heat exchanger tubing, which increases the rate of heat transfer and improves convection. (39)

fan heater. A type of convection heater that uses electric heating elements to produce warm air, which is distributed to a conditioned space by a fan. (43)

farad (F). A unit used to measure a capacitor's capacitance. A farad is equal to an electrical charge of one coulomb with the potential to discharge one volt of electrical pressure. Most capacitors used in HVACR systems are rated in microfarads. (12)

fast-acting fuse. A fuse that blows immediately after the maximum rating of the fuse is exceeded. (16)

feedback. The information detected by a sensor in a conditioned area that is sent to the controller to determine what action needs to be taken. (16)

field pole. An electromagnet in an ac motor's stator whose polarity changes as the flow of current alternates in the field windings. (15)

field winding. In an electric motor, the wires wrapped around the field poles of the stator that create a magnetic field when current flows through them. (15)

field-erected air-conditioning system. A system in which all components are purchased individually and assembled at the spot where the system is to be used. (32)

file. A hand tool with cutting ridges, or teeth, used to clean and shape metal surfaces. (7)

fill. In a cooling tower's wet decks, specially designed sheets or structures with different ridges, corrugations, or designs used to increase air-water contact with the lowest possible air pressure drop. (33)

filter-drier. A device used to remove moisture, dirt, metal, and other debris from circulating refrigerant. (6)

fin-and-tube evaporator. An evaporator that features metal fins of various styles and types connected to the evaporator tubing. (21)

fin comb. A tool used to straighten the bent fins of evaporators, condensers, and other heat exchangers with fins. Also called a *fin straightener*. (55)

fixed filter humidifier. A humidifier with a pad that consists of numerous layers of a tight metallic mesh wetted by water metered through a solenoid valve. (35)

flame failure response time (FFRT). The amount of time for an oil furnace's primary control unit to sense that there is no flame when the thermostat is calling for heat. (42)

flame rectification. The process of using a pilot flame or gas burner flame to change a small electric current from alternating current to direct current. Ignition control modules rely on flame rectification to verify the presence of a flame in a furnace. (41)

flame retention oil burner. An oil burner with a combustion head that directs combustion air in a manner that retains its flame, making it more compact and more efficient. (42)

flame rollout. A phenomenon in which the flame in a furnace spills backward out of the burner. (41)

flammability. A substance's capacity to ignite. Refrigerants have a flammability rating of 1, 2, 2L, or 3 under ASHRAE Standard 34. (9)

flammability limits. The range of fuel concentrations in a mixture of fuel and air within which the fuel will burn when an ignition source is present. (41)

flare. An enlargement at the end of a piece of tubing, usually made at about a 45° angle, by which the tubing is connected to a threaded fitting. (8)

flare nut wrench. A wrench with a small opening in the gripping head, similar to an open end wrench, but capable of providing maximum surface area contact with flare nuts. (7)

flashback arrestor. A type of check valve with a built-in flame arrestor that is installed in the supply hose of a

Copyright Goodheart-Willcox Co., Inc.

torch to prevent the flame from traveling inside the hose to the supply tank. (8)

flash gas. The instantaneous evaporation of liquid refrigerant. In an evaporator, flash gas occurs from the pressure drop between the high side and low side of the system. This pressure drop allows flash gas to absorb heat, which helps to cool the rest of the liquid refrigerant. In a liquid line, the unintended evaporation of high-pressure liquid refrigerant, which reduces system efficiency and can damage an expansion valve. (6)

flash point. The temperature at which the vapors of a refrigeration lubricant ignite. A high flash point means that a lubricant is thermally stable. (9)

flat-plate collector. A solar energy collector that uses a series of flat-plates with an insulated surface to collect solar energy. (44)

floc point. The highest temperature at which wax separation occurs in a refrigeration lubricant. A low floc point reduces problems associated with wax separation. (9)

flooded system. An HVACR system that uses a low-side float (LSF) or high-side float (HSF) to maintain a certain level of liquid refrigerant in the evaporator. (20)

flow check piston. A metering device used in heat pump systems that meters refrigerant passing through it in one direction and moves its piston to allow refrigerant to pass freely in the other direction. (40)

flow-control valve. A hydronic system valve used to ensure that water flows in the proper direction through the system. (39)

flow hood. An instrument used to direct and calculate all of the airflow through a duct at a given supply or return. (30)

flow switch. An electrical switch that is opened or closed based on flow of a fluid. In a hydronic system, a flow switch may be used to shut down the system or bypass parts of it when there is inadequate water flow. (39)

flue draft test. A draft test used to measure only the draft in the flue pipe of a combustion heating system. See also *overfire draft test*. (42)

fluorescent dye leak detection. A leak detection method that uses a fluorescent dye, which is circulated through the system. An ultraviolet light is required to identify the location of a leak. (10)

flux. A substance applied to surfaces to be joined by brazing or soldering to keep oxides from forming and to aid in the flow of filler metal. (8)

foot-pound (ft-lb). A unit of work. A foot-pound is the amount of work done in lifting 1 lb a distance of 1′. (4)

force (F). Energy applied to matter that, unless counteracted by opposing forces, causes a change in the matter's velocity. (4)

forced-air condenser. A condenser that uses a fan to blow air over condenser tubes to remove heat from refrigerant. (6)

forced-air heating system. A heating system that uses a blower to circulate heated air through ducts to a conditioned space. The blower also draws cool air from the conditioned space and into the air handler. (38)

forced draft. The exhaust from a fan. (29)

forced-draft cooling tower. A cooling tower that uses a fan placed at the air inlet to draw air in through itself and blow it through and out of the tower. (33)

forced-draft evaporator. An evaporator that uses a motor-driven fan to circulate air across the evaporator tubing. (6)

forward bias. A diode setup that allows current to flow through the diode. The negative terminal of a dc power supply is connected to the cathode, and the positive terminal is connected to the anode. (14)

fractional efficiency test. An advanced technique used to measure air filter performance in which extremely accurate equipment is used to count the number of particles trapped by the air filter. (28)

fractionation. Separation of a zeotropic blend into its individual refrigerants during phase change. (9)

free air. Bubbles of air that collect at the high points in a hydronic system. Free air is released through air vents. (39)

free air displacement. Speed at which vapor is pumped through a vacuum pump, measured in cfm (cubic feet per minute). Also called *volume capacity*. (10)

free cooling. The use of an air-side economizer to draw in cool outdoor air to reduce indoor air temperature. (36)

freezant. A type of refrigerant, such as liquid nitrogen, used to rapidly freeze foods. (9)

freezer burn. The dehydration of frozen food, which results in a change in color, flavor, and texture of the food. (23)

freezestat. A safety control device used in forced-air zoned systems that functions as a open-on-drop thermostat set to open if air temperature right above the evaporator coil drops to around 33°F. This stops the compressor to prevent the formation of ice on an evaporator, which can occur when airflow is reduced (such as when a zone damper closes and a bypass damper does not compensate adequately). (36)

friction loss. The air pressure drop resulting from air contacting the inside surface of a duct. (29)

friction rate. The friction loss along the total effective length of ductwork that results in a pressure drop equal to available static pressure. (29)

front gap. In an oil burner, the horizontal distance between the center of the front tip of the nozzle and the tips of the electrodes. (42)

front seated. A service valve position used to block the flow of refrigerant through the valve. A front-seated valve allows a technician to use the service port and to redistribute or isolate refrigerant in the system. (10)

frost back. The accumulation of condensation on a suction line due to the difference in the line temperature and ambient temperature. (20)

Copyright Goodheart-Willcox Co., Inc.

fuel line filter. A filter used to remove impurities from fuel oil before the fuel oil reaches the oil burner for combustion. (42)

fuel oil. A refined form of petroleum used to produce heat in an oil-fired heating system. The most commonly used fuel oil in residential and light commercial heating is No. 2 fuel oil. (42)

fuel unit. An oil burner subsystem consisting of a motor-driven pump that performs three tasks. It moves fuel oil from the storage tank to the oil burner, acts as a secondary filter after the fuel line filter, and regulates the pressure of the fuel oil pumped to the oil burner. (42)

full-load amperage (FLA). The electrical current level at which a motor's full-load torque and horsepower are reached. (15)

fully halogenated. A term describing refrigerant that contains halogens, such as chlorine and fluorine, in the place of hydrogen. CFCs are fully halogenated compounds. (9)

fumes. Small, solid, airborne particulates formed by the condensation and solidification of gaseous materials. (28)

fuse. An overcurrent electrical protection device containing a metal conductor in series with an electrical circuit that is designed to conduct a certain amount of current before it melts to open the circuit. (13)

fusible link. A heat-sensitive device that opens an electric circuit when the ambient temperature rises too high. A fusible link must be replaced once it has been opened. (43)

fusible plug. A relief valve that consists of a threaded plug with a metal core that melts at a much lower temperature than the outer shell. These are commonly used on refrigerant cylinders to prevent bursting due to excessive heat. (10)

gable fan. A fan installed at a louvered gable opening of a vented attic and used for attic ventilation. (29)

galvanic action. The corrosion of metal that occurs when two different metals are in contact in moist air. (52)

gas. Any physical substance with no definite shape or volume, which expands to fill its container. (4)

gas burner. A device that mixes primary air and fuel gas from a manifold to burn a flame aimed into a furnace's heat exchanger. (41)

gasket. A thin seal installed between the mating surfaces of a case or housing to prevent leaks at the joint, such as between a compressor and its service valves. In refrigeration cabinet construction, a flexible rubber material pressed into a channel on the door to form an airtight seal between the door and cabinet when the door is closed. (7)

gas manifold. A pipe with multiple sockets that hold spuds that direct fuel gas into burners in a gas-fire appliance. (41)

gateway. In BACnet, a device similar to a router that is connected between native and nonnative devices that "opens" a message, translates it, packages it, and sends it on. (45)

gauge manifold. An instrument consisting of a compound gauge, a high-pressure gauge, and multiple ports and hand valves. Used to check pressures and perform service operations, such as system evacuation, refrigerant recovery, and refrigerant charging. (10)

Gay-Lussac's law. A gas law that states that at constant volume, the absolute pressure of a given quantity of a gas varies directly with its absolute temperature. In other words, when a gas is held at a constant volume, its pressure and temperature will rise together or will fall together. (5)

global warming potential (GWP). A numeric value assigned to refrigerants to express the risk each refrigerant poses to warming the environment compared to carbon dioxide, which has a GWP of 1. (9)

Globally Harmonized System (GHS). A system for standardizing and harmonizing the classification and labeling of all chemicals. (2)

glow coil. In gas-fired heating systems, a high-resistance heating element used in a hot-surface ignition (HSI) system that illuminates when conducting electric current and ignites the burner flame. Also called a *hot-surface igniter*. A glow coil is just one of several different types of ignition methods of gas-fired appliances. (41)

gravitational circulation. A natural phenomenon of air movement that occurs because cold air is denser than warm air and sinks below warmer, less dense air. (21)

gravity flow basin. A water-filled container on top of a cooling tower that has precision holes through which accumulated water flows onto wet decks. (33)

gravity heating system. A heating system that relies on natural convection to distribute heated air. Heated air rises and cool air falls. (38)

grille. A nonadjustable fixture used to cover return duct inlets. (29)

ground. The earth to which an electrical system connects. (13)

ground coil. An underground length of tubing through which refrigerant is circulated in a direct-exchange ground-source heat pump system. (40)

ground fault. A condition in which a device or ungrounded metal part becomes electrically hot or live. This is a dangerous condition in which a short circuit to ground that is waiting to happen. This may also be called a *short to ground*. (13)

ground fault circuit interrupter (GFCI). An electrical protection device that detects imbalances between ungrounded and grounded conductors of a circuit. A GFCI opens the electrical circuit when equipment connected to it is defective, misused, or improperly grounded. (13)

grounded conductor. The neutral wires connected to a grounded transformer to create a return path in an electrical circuit. (13)

grounding. The act of connecting something to the earth or the equipment that connects something to the earth. (13)

Copyright Goodheart-Willcox Co., Inc.

ground loop. A length of underground tubing that circulates water or a water-based solution running to and from the water coil (a heat pump's water-to-refrigerant heat exchanger). The ground loop absorbs or expels heat at two locations: in the water coil and in its tubing underground. (40)

ground-source heat pump (GSHP). A heat pump that uses the earth as a heat source or a heat sink for producing the desired temperature in a conditioned space. A ground-source heat pump circulates water or refrigerant through tubing placed underground or underwater. (40)

gun burner. An oil burner that uses a motor to operate a fan and a pump in order to deliver a pressurized mixture of air and fuel oil to the flame in the combustion chamber. (42)

hacksaw. A type of hand saw used for cutting metals and tubing. (7)

halide torch leak detection. A leak detection method that uses a hose to siphon air through a torch burning near a copper plate. Any leaking refrigerant sucked up by the hose turns the torch flame green. (10)

hammer. A hand tool used for pounding or striking that consists of a hard head attached to a handle. (7)

hard lockout. A system shutdown after a furnace fails to light during its trial for ignition (TFI) period. A hard lockout requires a service call to reset or interrupt power to the ignition control module. (41)

hard start kit. A kit sized to a specific voltage that is used to start a stuck single-phase compressor motor. The kit consists of a capacitor, a PTC or potential relay, and wires. (17)

hazard. A potential for harm. According to OSHA, hazard is "associated with a condition or activity that, if left uncontrolled, can result in an injury or illness." (2)

Hazard Communication Standard (HCS). An OSHA standard that requires chemical manufacturers, distributors, or importers to provide safety data sheets (SDS) to communicate the hazards of hazardous chemical products. (2)

hazard pictogram. A symbol used to convey health, physical, and environmental hazard information. (2)

hazard statement. A standard phrase assigned to a hazard class and category that describes the nature of the hazard (2)

head pressure. In an HVACR system, another name for *high-side pressure*, *condenser pressure*, and *discharge pressure*. (6)

head pressure control. Methods of controlling head pressure under varying conditions, primarily low ambient conditions. See *condenser pressure regulator*, *receiver pressure regulator*, *low-ambient control*, and other head pressure control topics. (21)

heat. A form of energy that, when applied to a substance, results in the increased motion of atoms. (4)

heat anticipator. A small resistance coil used by a thermostat to produce enough heat to keep the thermostat warmer than the ambient temperature so the thermostat will cycle off the heat before reaching the cut-out temperature and avoid system overshoot. (36)

heat exchanger. Any device in which heat is exchanged between two mediums. A wide variety of heat exchangers are used in HVACR systems. Common examples include evaporators, condensers, and suction-line, liquid-line heat exchangers. Heating systems have much different heat exchangers that are based on their method of heat production. (20)

heat exchanger (in a capillary tube system). The area where the capillary tube and the suction line are in contact. The capillary tube transfers some of its heat to the cooler suction line through conduction, which provides superheating in the suction line and subcooling in the liquid line and improves system efficiency. (20)

heat exchanger (in heating systems). A sealed chamber where the heat of combustion is transferred to the air or water used to heat a conditioned space. The heat exchanger also carries combustion gases to a flue or vent where they are released outdoors. (38)

heat gain. The increase of heat within a given space as a result of direct heating by solar radiation and of heat radiated by other sources, such as lights, equipment, or people. (37)

heat gain HTM. A value used in determining a building's heat gain. This value is calculated by subtracting the indoor design temperature (IDT) from the outdoor design temperature (ODT) and adjusting for sun exposure, heat storage, and other factors. See *heat transfer multiplier (HTM)*. (37)

heating degree days. A day in which the average temperature for a day is below 65°F (18°C). Cooling degree days and heating degree days are used to determine the heating or cooling needed for a given region (27)

heating seasonal performance factor (HSPF). A measurement of how efficiently a heat pump works throughout the heating season. (46)

heating-cooling thermostat. A thermostat that can operate a cooling system and a heating system. Also called a *combination thermostat*. (36)

heat insulator. A substance that conducts heat poorly. (4)

heat lag. The amount of time it takes for heat to travel through a substance that is heated on one side. (37)

heat leakage. The heat that is conducted through the walls, ceilings, and floors when there is a temperature difference between spaces. (37)

heat leakage load. When determining the total heat load, the amount of heat from the surrounding air that is transferred through the materials of the cabinet into the conditioned space. (50)

heat load. The amount of heat that must be added or removed from a space in order to maintain the desired temperature in that space. (37)

heat loss. The transfer of heat from inside to outside by means of conduction, convection, and radiation through all surfaces of a house. (37)

Copyright Goodheart-Willcox Co., Inc.

heat loss HTM. A value used in determining a building's heat loss. This value is calculated by subtracting the outdoor design temperature (ODT) from the indoor design temperature (IDT). See *heat transfer multiplier (HTM)*. (37)

heat of compression. Heat energy added to a vapor when it is compressed. (5)

heat pump. A compression refrigeration system that can reverse the circulating flow of refrigerant in order to add or remove heat from a conditioned space. Basic air-to-air heat pumps are similar to comfort cooling split air-conditioning systems, but they can reverse the flow of refrigerant in order to provide heating. See also *air-source heat pump (ASHP)*, *air-to-air heat pump*, *air-to-water heat pump*, *ground-source heat pump (GSHP)*, and *water-source heat pump (WSHP)*. (40)

heat recovery system. A collection of devices used to reclaim waste heat for a building's reuse as climate control heating or water heating. Also called *heat reclaim system* or *heat reclamation system*. (21)

heat recovery ventilator (HRV). A heat exchanger that passes incoming fresh air and outgoing stale air through a series of parallel passages. As each air stream passes through the HRV, heat is exchanged, so the incoming air is closer to the temperature of the outgoing air. (28)

heat sink. A surface that absorbs radiant heat that strikes the surface. (27)

heat transfer multiplier (HTM). A value used in determining a building's heat loss or heat gain that is calculated by multiplying a building component's U-value by a temperature difference. These values are often available on charts. (37)

heat transfer rate. The amount of heat conducted through a structure for a given unit of time. (37)

hermetic compressor. A compressor that includes an integrated drive motor in a sealed unit. (18)

hex key wrench. Hexagonal bar or shaft designed to fit the hexagonal indents in the heads of screws. Also called an *Allen wrench*. (7)

highboy furnace. A furnace that is taller than it is wide or long. (38)

high-efficiency gas furnace. A furnace that has a secondary heat exchanger capable of extracting enough heat from flue gases to cause them to condense. This type of furnace has an AFUE rating between 90% and 97%. Also called a *condensing furnace*. (41)

high head pressure. Excessive pressure at the compressor's outlet, which is frequently caused by a dirty condenser, though can also result from various other causes. (26)

high-limit control. A control device in a boiler's combustion chamber or warm-water outlet that automatically shuts off the fuel supply if the water temperature or pressure gets too high. (39)

high-limit switch. A safety device placed in the bonnet of a furnace, near the heat exchanger, that opens its electrical switch in response to high temperature in order to protect the heat exchanger from overheating by opening the gas valve circuit and stopping the flow of fuel gas to the burners. One example of a high-limit switch is a bimetallic snap disc. A high-limit switch may sometimes be called a *safety stat*. (41)

high-pressure chiller. A compression chiller that operates under high pressures and is used primarily for commercial and industrial process cooling. (33)

high-pressure gauge. An instrument capable of measuring high pressure on a single continuous scale. Also called a *high-side gauge*. (10)

high-pressure motor control. A safety control device used to turn off the compressor before dangerously high pressure is reached. (16)

high side. The parts of a refrigeration system subject to high pressure, such as the compressor, condenser, liquid receiver, and liquid line. (6)

high-side charging. A method of injecting liquid refrigerant into the high side of a refrigeration system through a high-side service valve, often the liquid receiver service valve (LRSV). (52)

high-side float (HSF). A float-type metering device that regulates refrigerant flow into the evaporator based on the volume of liquid refrigerant in the high-side receiver. (20)

high-side pressure. The pressure value on the high side of an HVACR system. High-side pressure can also be called *discharge pressure*, *condenser pressure*, *head pressure*, and several other names, depending on circumstances. (6)

high-stage compressor. In a compound refrigeration system, a compressor that draws in refrigerant from the low-stage compressor, pumps refrigerant to a higher temperature and higher pressure, and discharges into the condenser. (49)

hole flow. The principle that explains how electrons flow through a semiconductor giving the appearance of holes moving in the opposite direction. (14)

horizontal furnace. A furnace that is designed to be placed on its side. Return air flows in a horizontal path through one end of the furnace, across the heat exchanger, and out through the opposite end of the furnace. (38)

horsepower (hp). A US Customary unit of mechanical power equal to 550 ft-lb of work per second. (4)

hot and cold merchandiser. A commercial unit that holds hot food in a heated section and cold food in a refrigerated section. (47)

hot-gas bypass valve. A valve that regulates certain amounts of hot refrigerant vapor from the discharge line to enter the low-side of the system for the sake of capacity control. (22)

hot-gas defrost. A defrost system in which the evaporator is defrosted by hot-gas refrigerant vapor pumped directly from the compressor discharge line into the evaporator tubing. (21)

hot-gas defrost valve. A valve regulating a refrigerant line between the compressor discharge line and the

Copyright Goodheart-Willcox Co., Inc.

evaporator that opens to allow hot gas to circulate through the evaporator to defrost it. (22)

hot pull down. The process of a refrigeration system that is starting or restarting with its conditioned space temperature being pulled down to normal operating temperature from a much higher starting temperature (often ambient temperature). (19)

hot-surface igniter. In gas-fired heating systems, a high-resistance heating element used in a hot-surface ignition (HSI) system that illuminates when conducting electric current and ignites the burner flame. Also called a *glow coil*. A hot-surface igniter is just one of several different types of ignition methods of gas-fired appliances. (41)

hot-surface ignition (HSI) system. A type of gas furnace ignition system in which a silicon carbide igniter, also called a glow coil, is used to light the gas burners, eliminating the need for a standing or intermittent pilot light. (41)

hot water reclaim tank. A cylinder filled with water that absorbs heat from the hot-gas refrigerant flowing through a refrigeration system's discharge line. (21)

hot wire. See *ungrounded conductor*. (25)

hot-wire anemometer. An anemometer that is placed directly in the path of airflow with a velocity-sensing device consisting of a temperature-sensitive wire element. (27)

humidifier. A piece of equipment that adds water vapor to the air. See *atomizing humidifier*, *bypass humidifier*, *central humidifier*, *evaporative humidifier*, *fixed filter humidifier*, *impeller humidifier*, *nozzle-type humidifier*, *piezoelectric (ultrasonic) humidifier*, *plate humidifier*, *portable humidifier*, *rotating disk humidifier*, *rotating drum-type humidifier*, *under-duct humidifier*, and *vaporizing humidifier*. (35)

humidistat. A control device that responds to changes in humidity and activates and deactivates parts of the humidity control systems, such as humidifiers, dehumidifiers, or air mixers as needed. (35)

humidity. The presence of moisture or water vapor in the air. (27)

hunting. A responsive mechanism going too far in one direction and then overcorrecting and going too far in the other direction. This is also referred to as *surging*. (20)

HVAC Excellence. An organization that develops standards for HVACR curriculum and provides accreditation to a school's HVACR program and certification to students, technicians, and instructors. (1)

HVACR designer. Someone who prepares designs for smaller or more common air-conditioning systems but is generally not licensed and does not have the same level of knowledge as an HVACR engineer. HVACR designer plans may still need approval by an engineer. (1)

HVACR drafter. Someone who works with engineers and designers to prepare construction drawings for HVACR systems. (1)

HVACR engineer. Someone with a four-year mechanical engineering degree that analyzes a building or refrigerated space to determine the requirements of the system. Engineers often have a state license for this work. (1)

hybrid solar energy system. A solar energy system that is a combination of both a passive and an active system. (44)

hydrocarbons (HCs). Organic substances that contain carbon and hydrogen. These are components of petroleum and natural gas. Known for their use as fuel and in the production of plastics, solvents, and industrial chemicals, HCs can also be used as refrigerants with low ODP and GWP ratings. (9)

hydrochlorofluorocarbons (HCFCs). A group of refrigerants composed of hydrogen, chlorine, fluorine, and carbon. HCFCs are less harmful to the ozone layer than CFCs but may have high GWP ratings. (9)

hydrofluorocarbons (HFCs). A group of refrigerants that contain hydrogen, carbon, and fluorine, but not chlorine. HFCs have no ozone depletion potential. (9)

hydrofluoro-olefins (HFOs). A newer group of refrigerants with low ODP and GWP ratings. They are composed of hydrogen, fluorine, and carbon, but they have at least one double bond between the carbon atoms. (9)

hydronic system. A system that distributes conditioned water or steam to spaces in order to heat or cool those spaces. (39)

hygrometer. An instrument used to measure moisture in the air (usually displayed as relative humidity). (27)

hygroscopic element. The sensing element of a traditional electromechanical humidistat. It stretches as the moisture content of the air increases and shrinks as humidity decreases. (35)

ice bank. In a refrigeration system, a solid block of ice that is intentionally formed around an evaporator during periods of low demand and melts during periods of high demand. (47)

ice machine. A commercial refrigeration system that automatically freezes and forms water into ice and dispenses it for consumer use. (47)

ice thickness sensor. A device that monitors the thickness of the ice forming in the molds of a vertical evaporator cube ice machine. (53)

ignition carryover. The length of time (in seconds) that an oil furnace igniter will continue to spark after the primary control unit senses a flame. Ignition carryover only applies to furnaces with interrupted ignition, as intermittent ignition continues sparking throughout a furnace's heating cycle. (42)

ignition point. The minimum temperature at which a flame will ignite and continue to burn fuel oil vapor as the vapor rises from a pool of liquid fuel oil. (42)

ignition system. A furnace subsystem designed to light the burners safely and monitor them for continued safe operation. In a gas-fired heating system, the ignition system is controlled by an ignition control module. In an oil-fired heating system, ignition is controlled by a primary control unit. (41)

Copyright Goodheart-Willcox Co., Inc.

ignition temperature. The heat required to initiate combustion. This temperature level varies for different fuels. (41)

ignition transformer. A step-up transformer that generates the high voltage necessary to ignite the flame in an oil-fired furnace. The high voltage arcs across a gap between two electrodes where it ignites fuel oil exiting the air tube of the oil burner. (42)

immersed evaporator. A liquid-cooling evaporator consisting of a plain coil that is submerged and mounted inside a container filled with a liquid. (21)

impedance. The opposition to the flow of alternating current in an ac circuit. (16)

impeller (compressor). In a centrifugal compressor, the compressor's rotor that operates similar to a circulating pump. (18)

impeller (hydronics). In a hydronic system, the part of a circulating pump that spins and forces water through the system. (39)

impeller humidifier. A humidifier in which a spinning disk flings water against a diffuser to atomize the water on impact. The water droplets then enter the airstream. (35)

incomplete combustion. A form of combustion in which a flame does not receive enough oxygen to finish the combustion process, resulting in unburned carbon. (41)

indirect radiant heat. An electric heating system in which the heating elements produce heat that warms a large surface, such as a floor or a panel on a ceiling or wall, which then radiates its heat to the solid objects in a conditioned space. Also called *surface radiant heat*. (43)

indirect-fired. A term describing commercial absorption systems in which the heat source is produced somewhere outside the system and then delivered to the absorption system's generator as piped-in steam, hot water, or hot gas. To contrast, see *direct-fired*. (34)

indoor air quality (IAQ). The quality of the air within buildings and structures, especially as it relates to the health and comfort of building occupants. (28)

indoor blower. A motor-driven fan in a forced-air system that creates airflow through the ductwork to deliver conditioned air to the conditioned space and to draw air from the conditioned space into the air handler to be heated or cooled. (38)

indoor coil. One of two refrigerant-circulating heat exchanger coils in a heat pump system. The indoor coil is located inside and warms or cools air for the conditioned space. (40)

indoor design temperature (IDT). In calculating heat loads, the ideal indoor temperature that the heating or cooling system works to maintain. (37)

indoor reset control. A hydronic system control that adjusts the boiler temperature to match the heating load by monitoring the cycle time required to satisfy a call for heat. (39)

induced draft. The air flowing into a fan. (29)

induced-draft cooling tower. A cooling tower that uses a fan placed at the air exhaust to draw air into the tower through louvers on an opposing side, across the wet deck, and out of the tower through the fan. (33)

induced magnetism. The ability of a magnetic field to produce magnetism in a metal. (12)

inductance. An electrical property that opposes a current change in an ac circuit. This opposition to current change creates a noticeable power loss in a circuit. (13)

induction. The process of transferring electricity using a magnetic field. For example, transformers use induction to transfer alternating current from one coil of wire to another. (12)

induction motor. An ac motor that operates by using the magnetic field generated in the stator to induce current in the rotor. (15)

inductive reactance. The opposition to alternating current as a result of inductance. Inductive reactance causes current to lag behind voltage in a circuit. (13)

inefficient compressor. A compressor with reduced pumping ability after sustaining wear and tear on its working parts. Operational measurements reveal higher than normal suction pressure and lower than normal discharge pressure. (53)

infiltration. The natural and unintentional or accidental leakage of outside air into a building through doors, cracks around windows, and other construction joints. (28)

initialization. An overdriving routine in which a controller, when first powered, will send an electronic expansion valve (EEV) more steps than the valve can use. (20)

in-line ammeter. An ammeter that is connected to a circuit with leads to measure a circuit's current. In-line ammeters must break the circuit to be connected in series to take measurements. (17)

inshot burner. A single-port gas burner that feeds the mixture of fuel gas and air through a large orifice to produce a large flame that is directed toward the heat exchanger. (41)

inspection mirror. A small adjustable mirror mounted on a long extension that is used for inspection. (25)

inspection tool. A tool that allows the technician to see inside ductwork in order to identify debris and contamination, monitor the cleaning process, and evaluate the success of the cleaning procedure. (30)

installation. Work that involves the initial setup of equipment and systems. (1)

insulator. A material or substance that resists the flow of electrons. Examples of insulators include mica, glass, rubber, plastic, and paper. (12)

integrated ignition control module. A gas furnace control that uses advanced electronics to provide greater functionality than a nonintegrated control module, such as the ability to perform self-diagnostics. (41)

Copyright Goodheart-Willcox Co., Inc.

intercooler. A heat exchanger in a compound refrigeration system that removes superheat from the low-stage discharge vapor before it enters the high-stage compressor. (49)

intermittent absorption system. An absorption system that operates intermittently. It uses one limited charge of fuel that should operate the system for one day. (34)

intermittent defrost timer. A device that controls a cumulative run-time defrost system by counting down to the next defrost cycle only when the compressor is running. (24)

intermittent duty. According to the NEC, operation for alternate intervals of (1) load and no load; or (2) load and rest; or (3) load, no load, and rest. Motors that are intermittent duty are rated by how long they can safely run with a full load within 9°F (5°C) of their rated ambient temperature. These ratings are 5, 15, 30, or 60 minutes. (15)

intermittent ignition. An oil furnace ignition system that applies a high voltage to the electrodes throughout oil burner operation. (42)

intermittent-pilot ignition system. A type of gas furnace ignition system that burns and monitors its pilot light only while the thermostat is calling for heat. When the furnace is off, the pilot is not lit. (41)

inter-purge. A function of a gas furnace ignition control module. During a soft lockout, the control module cycles on the combustion blower to vent any combustion gases remaining in the heat exchanger after a failed ignition attempt. (41)

interrupted ignition. An oil furnace ignition system that applies a high voltage to the electrodes for only a brief period of time at the beginning of oil burner operation. (42)

inverter. An electronic device that converts direct current to alternating current. (14)

joule (J). An SI unit of work equal to the force of one newton through a distance of one meter. (4)

jumpered. A situation in which a jumper wire is connected in parallel with an electrical device. (55)

keel cooler. In marine HVACR, a condenser located on the outer hull of a boat near the keel to take advantage of water's ability to absorb heat. (48)

Kelvin scale. An absolute temperature scale that uses the same increments as the Celsius scale. 0°K is equal to –273°C. (4)

kickspace fan convector. A fan convector designed to fit into very tight spaces, such as in the small space under kitchen and bathroom cabinets. (39)

kinetic energy. Energy of motion. (4)

king valve. Another name for a liquid receiver service valve that is installed between the outlet of a liquid receiver and the liquid line. During normal operation, warm, high-pressure refrigerant liquid flows through it. (10)

K-value. See *thermal conductivity*. (37)

ladder diagram. An electrical line diagram that shows the devices and connections in a circuit arranged in the order that they activate during circuit operation. The vertical lines in the diagram identify the power supply, and the horizontal lines contain the various devices and controls located in the circuit. (16)

latent heat. Heat that brings about a substance's change of state with no change in its temperature. (4)

latent heat of fusion. The amount of heat added to or removed from a substance to change it from a solid to a liquid or a liquid to a solid. Also referred to as the *latent heat of melting* or the *latent heat of freezing*. (4)

latent heat of vaporization. The amount of heat added to or removed from a substance to change it from a liquid to a gas or a gas to a liquid. Also referred to as *latent heat of condensation*. In heat loads and system thermodynamics, the rate at which heat is absorbed by the refrigerant as it vaporizes. (4)

law of conservation of energy. A law stating that energy cannot be created or destroyed, only changed from one form to another. (4)

lean. An air and fuel mixture in which there is too little fuel. If too lean, combustion cannot occur at all. (41)

learning thermostat. A thermostat that can remember an occupant's desired set point and adapt the HVAC system operation to automatically program on and off cycles and temperature set points. (36)

Legionnaires' disease. A building-related illness caused by the Legionella bacteria, which can live in cooling towers, evaporative condensers, and domestic water systems. (28)

level (orientation). A term describing a perfectly horizontal line. Used in installation work. (7)

level (tool). A tool used in installation work to set a line at level (perfectly horizontal), plumb (perfectly vertical), or perfect 45° angle. (7)

lifelong learning. Updating and increasing one's knowledge of one's career field over the course of a lifetime. (1)

lineman's pliers. A type of pliers equipped with both a gripping surface and a cutting edge, mainly used in electrical work. (7)

line voltage. The voltage of a building's electrical wiring, which is usually 120 Vac or 240 Vac. (36)

line-voltage thermostat. A thermostat that typically operates using either 120 Vac or 240 Vac. (36)

liquid. Any physical substance that has no definite shape but has a definite volume. A liquid takes the shape of its container. (4)

liquid-cooling evaporator. An evaporator designed to cool a liquid rather than air. (21)

liquid injection valve. A refrigerant control valve installed in parallel with a hot-gas bypass valve that directs liquid refrigerant from the liquid line to combine with bypassed hot gas to provide a cooler (desuperheated) bypassed refrigerant mixture into the low side of the system for capacity control. Also called *desuperheating valve*, *desuperheating expansion valve*, or *desuperheating TXV*. (22)

Copyright Goodheart-Willcox Co., Inc.

liquid line. Tubing that carries liquid refrigerant from the condenser or liquid receiver to the metering device. (6)

liquid line manifold. A refrigerant-carrying body that distributes high-pressure liquid refrigerant from the liquid line to separate metering devices and their corresponding evaporators. (22)

liquid line service valve. A high-side service valve connected to the liquid line of a system, usually located closer to the condenser than the metering device. During normal system operation, warm, high-pressure refrigerant liquid flows through it. (10)

liquid receiver. A tank on the high side that is connected between the outlet of a condenser and a liquid line that is used for refrigerant storage. (6)

liquid receiver service valve (LRSV). A high-side service valve located between the liquid receiver's outlet and the liquid line's inlet. Also called a *king valve*. During normal operation, warm, high-pressure refrigerant liquid flows through it. (10)

liquid recovery method. An active recovery procedure that uses a recovery machine to recover liquid refrigerant from the high side of a system. (11)

liquid slugging. A condition in which too much refrigerant in the evaporator results in liquid refrigerant being drawn into the compressor. (20)

listing. Leaning to one side, usually caused by an uneven floor. This can cause unusual noises from vibration of the condensing unit in domestic appliances. (25)

lithium bromide. A nontoxic, nonflammable, nonexplosive, and chemically stable salt used in some absorption systems. Represented by the chemical formula LiBr. (34)

lithium bromide absorption chiller. An absorption system that uses water as the refrigerant and lithium bromide (LiBr) as the absorbant. (34)

localized controller. A building system controller used to provide independent control for a specific system or piece of equipment. (45)

local sensing. When a high-voltage electrode and flame rod are packaged together in a direct-spark ignition system for a gas-heating system. A single device is responsible for both providing the spark and detecting the flame. (41)

locked rotor amperage (LRA). The current that a motor draws as power is first applied to start turning the rotor. This value may be two to six times higher than full-load amperage (FLA). See also *full-load amperage (FLA)*. (15)

locker plant. A plant smaller than a processing plant that prepares, fast-freezes, and stores various food products. (47)

lockout (LO). The practice of locking a mechanism or an electrical switch in the open position so that maintenance or service work can be performed safely. (2)

lockout relay. A special high-impedance relay that keeps a circuit from restarting when any of the safety controls in the circuit have opened. Power to the lockout relay coil must be interrupted to reset the lockout relay contacts and return the system to normal operation. (16)

lockout/tagout (LOTO). The combination of locking out and tagging out, in which a mechanism or an electrical switch is locked open and a tag is placed on it to inform others that service work is in process and that this mechanism or switch's position should not be changed. (2)

LonTalk. A proprietary communications protocol developed by Echelon that permits integration of components from different manufacturers in a building control system. (45)

low-ambient control (LAC). A control valve that combines a condenser pressure regulator and a receiver pressure regulator in a single valve body. Commonly used for head pressure control in low ambient conditions. Also called a *combination condenser-receiver pressure regulator*, *combination ORI/ORD valve*, *combination head pressure control*, or *low-ambient control (LAC) valve*. (22)

lowboy furnace. A furnace designed to be shorter and longer or wider than a highboy furnace of comparable capacity. It is installed in spaces where there is limited vertical clearance. (38)

low-pressure chiller. A compression chiller operating under low pressures that is capable of producing very low evaporator temperatures. It is typically a centrifugal chiller charged with R-123. (33)

low-pressure motor control. A control device that reacts to the low-side pressure it senses by closing an electric switch on a rise to a preset pressure (cut-in setting) and opening that switch on a drop to a preset pressure (cut-out setting). (16)

low-pressure safety control. A pressure-sensitive element, such as a diaphragm or bellows, that is set to shut down the compressor in the event of refrigerant loss or an evaporator freeze-up. (16)

low side. The parts of a refrigeration system subject to low pressure, such as the evaporator, accumulator, and suction line. (6)

low-side charging. A method of injecting refrigerant vapor into the low side of a refrigeration system through a low-side service valve, often the suction service valve (SSV). (52)

low-side float (LSF). A refrigerant control that uses a float-operated valve to maintain a constant level of liquid refrigerant in the evaporator. (20)

low-side pressure. The pressure value on the low side of an HVACR system. Low-side pressure can also be called *suction pressure*, *evaporator pressure*, and several other names, depending on circumstances. (6)

low-stage compressor. In a compound refrigeration system, a compressor connected to the suction line that pumps the lower temperature and lower pressure refrigerant into the high-stage compressor. (49)

low-voltage thermostat. A thermostat that operates at 24 Vac supplied by a step-down transformer. It often uses relays to switch line voltage circuits on and off. (36)

low-water cutoff (LWCO). A control that ensures that a hydronic system operates only when it contains the

Copyright Goodheart-Willcox Co., Inc.

proper amount of water. A low-water cutoff may operate a makeup water valve or shut down the system if the water level drops too low. (39)

LP gas. Liquefied petroleum, which consists primarily of liquefied propane (C_3H_8) and also some liquefied butane (C_4H_{10}). (41)

machine screw. A threaded fastener that can be screwed into place or held with a tightened nut. (7)

magnetic field. A space in which lines of magnetic force exist. (12)

magnetic flux. The lines of force of a magnet. (12)

maintenance. Service performed regularly to reduce the likelihood of a future breakdown and to minimize any reduction of system performance. (3)

maintenance service contract. An agreement for providing periodic maintenance and service of a system for a fixed rate. (3)

makeup air unit. A device that controls and regulates the necessary intake of fresh air into a building. (38)

makeup water. Water added to a cooling tower's sump through a float switch-operated valve to replace water lost through evaporation, drift, and blowdown. (33)

mallet. A type of small hammer, usually with a rubber or plastic striking surface, used for safely hitting parts without damaging their surfaces. (7)

manifold valve. A shutoff valve installed near a suction line manifold or a liquid line manifold. (22)

manometer. An instrument for measuring low pressure levels of gases and vapors, such as air velocity in ductwork. Gas pressure is balanced against a column of liquid, such as water, often in a U-shaped tube. (7)

Manual D. A manual developed by ACCA to be used to design both the supply and return ducts of a building. (29)

Manual J. A manual developed by ACCA to be used in calculating the heating and cooling loads of residential buildings. (37)

mass. The quantity of matter an object contains. (4)

master thermostat. In a zoned system, this is the thermostat that governs system operation and receives temperature input and calls for operation from slave thermostats. See *slave thermostat*. (36)

master-slave thermostat design. An older form of controlling a zoned system consisting of a master thermostat that operates based on the inputs from several slave thermostats. (36)

matter. Anything that occupies space and has mass. (4)

medium hard water. Well water that is untreated and contains a mineral content of 5 to 15 grains per gallon of water. (35)

megohmmeter. An electrical insulation tester that is used to detect current leaks or possible areas of insulation failure along conductors. A megohmmeter measures resistance by applying a known voltage supplied by the meter. (17)

mercury contactor. A switching device that immerses its electrodes into a small pool of mercury for electrical contact. A mercury contactor can be used to silently open and close a circuit feeding electric heating elements, such as in duct heaters. (43)

mercury switch. An electrical switch consisting of a sealed tube containing a small puddle of mercury and two to four contacts made at the ends of wires that run outside the tube. Contact is made when a mercury switch is tilted, which causes the mercury puddle to slide down the tube and complete the circuit. (36)

MERV (Minimum Efficiency Reporting Value). A measurement scale developed by ASHRAE to rate the effectiveness of air filters. (28)

mesosphere. The layer of the atmosphere that extends from 170,000′ (32 mi) to 280,000′ (53 mi). (27)

metering device. A device used to regulate the flow of liquid refrigerant into the evaporator, such as a capillary tube, an expansion valve, or a float valve. (6)

metering evaporator pressure regulator. An EPR that opens its valve in proportion to evaporator pressure. The higher the evaporator pressure, the more the valve opens. (22)

metering orifice. A fixed-orifice metering device that consists of a fitting with a small hole, called an orifice, between the fitting's inlet and outlet. The orifice acts as a constant throttle on the refrigerant flow and a constant pressure drop. (20)

microchannel. A type of heat exchanger construction in which fluid passages are less than 1 mm in diameter. These small refrigerant passages are surrounded by tightly packed fins that further increase surface area for efficient heat transfer. Microchannel heat exchangers can serve as evaporators, condensers, and other heat transfer applications. (21)

micron. A unit used to measure extremely low pressures. For example, 1000 microns are equivalent to 1 mm Hg. Microns are used when measuring vacuum for system evacuation. (10)

microprocessor. An electronic component that functions as the control center of a system. It is capable of accepting information, storing it, and reacting in some preset way. (14)

mid-efficiency gas furnace. A furnace that has no secondary heat exchanger, which means some heat energy is lost in the venting of hot flue gases. This type of furnace has an AFUE range of 79%–83%. Also called *noncondensing furnace*. (41)

mid-position. A service valve position midway between front seated and back seated. When a valve is in mid-position, refrigerant flows through the valve, and service port access is still available. (10)

milk cooler. A commercial refrigeration system that cools fresh milk to the legally required temperatures in a large tank. (47)

millivolt thermostat. A heating thermostat that operates a small solenoid valve powered by a very small voltage

Copyright Goodheart-Willcox Co., Inc.

produced by a thermocouple device sensing a standing pilot light. These may only be used in systems having a standing pilot. (36)

mineral oil (MO). A type of refrigeration lubricant made from refined crude oil and generally used only with CFCs and HCFCs. (9)

miscellaneous heat loads. Concerning heat loads and system thermodynamics, all sources of heat not covered by heat leakage, product cooling, and respiration heat loads, which may include lights, electric motors, people, and defrosting heat sources. (50)

mixing valve. A hydronic system valve that blends hot water from one inlet with cooler water from another inlet so that water leaving the valve is at the desired temperature. (39)

Modbus. A communication protocol used in building control and automation that was originally developed for use with programmable logic controllers (PLCs). (45)

modulate. A control term meaning to increase or decrease the intensity of operations. Examples include variable refrigerant flow or some thermostats controlling multistage heating. (36)

modulating furnace. A furnace controlled by solid-state integrated controls that can vary its heat output from 40% to 100% of its total capacity. (38)

modulating refrigeration system. A refrigeration system that is able to adjust its capacity to more closely match a variable heat load. (49)

moisture indicator. A sight glass with a color-changing element that is used to indicate a system's moisture content. (22)

mold. A growth of minute fungi that forms on vegetable and animal matter. Air conditioning applications may provide a favorable environment for their growth and development. The spores from certain molds can cause illness. (28)

Montreal Protocol. A document that banned the production of CFCs in all large, developed countries by January 1, 1996. (9)

MOP thermostatic expansion valve. A TXV that closes tightly during the Off cycle and remains closed during pull-down. The valve remains closed until pressure drops below the maximum operating pressure (MOP). This delay in valve opening permits rapid pull-down and prevents floodback and overloading of the compressor motor. (20)

motorized mixing valve. A type of mixing valve that uses an electronic sensor to monitor water temperature and a built-in electric motor to adjust the valve as needed based on the sensor feedback. (39)

motor nameplate. A plate mounted on the outside of a motor's frame that displays essential motor information. (15)

motor starter. A heavy-duty type of electromagnetic relay similar to a contactor that can handle high current loads, such as those for operating motors. Unlike a contactor, a motor starter has built-in overload protection. (16, 45)

motor terminal box. A box mounted on the outside of a motor's frame in which electrical connections are made to control and power the motor. (15)

motor water valve. An electric water valve that uses a motor to open, close, and position the valve to control water flow. (33)

muffler. A cylinder with internal baffles that mute the noise caused by refrigerant vapor pulsation, thereby reducing sound and vibration. (18)

mullion heater. A low-wattage electric heater around the door opening of a refrigerator-freezer that keeps the exterior surfaces of the cabinet warm enough to prevent humidity in the air from condensing on the cabinet. (24)

multimeter. A single electrical meter that can measure multiple electrical variables, such as voltage, current, and resistance. Also called *volt-ohm-milliammeter (VOM)*. (17)

multiple-blade damper. A device used in square or rectangular ducts to restrict or completely shut off airflow to a room or zone. (29)

multiple chemical sensitivity (MCS). An unexplained condition that manifests itself in reported sensitivities and adverse reactions to low levels of chemicals, bioaerosols, and other irritants. (28)

multiple-compressor system. A modulating refrigeration system in which two or more compressors operate in parallel for variable system capacity. (49)

multiple-evaporator system. A refrigeration system with two or more evaporators connected to only one condensing unit. (49)

multipoise furnace. A furnace that can be configured manually to make it an upflow, downflow, or horizontal furnace. (38)

multipurpose fuse. A fuse that will not blow during small overloads lasting only short periods of time, but will blow immediately if an extremely high overload occurs. (16)

multistage system. A refrigeration system with more than one stage of compression. The two general types are cascade systems and compound systems. (49)

multistage thermostat. A thermostat that can control a system's heating and cooling capacity through various means, such as modulating compressor and fan operation or varying fuel combustion or electrical power. (36)

multizone ductless split system. A comfort cooling system consisting of one or more outdoor units, multiple independent indoor units, and individual temperature controls for each indoor unit. Zoned cooling is used, but no ductwork is used. (31)

NATE. North American Technical Excellence, an independent professional certification organization, offering multiple certifications divided into installation and service and also senior level categories. (1)

Copyright Goodheart-Willcox Co., Inc.

natural-convection condenser. A condenser without a fan that relies on differences in temperature for air movement. Also called *static condenser* or *natural-draft condenser*. (6)

natural-draft cooling tower. A cooling tower that relies on wind and natural convection to blow through the cooling tower to aid evaporation. (33)

natural-draft evaporator. An evaporator without a fan that relies on natural convection, gravity, and differences in pressure and temperature for air circulation. Also called *static evaporator*. (6)

near-azeotropes. Refrigerant blends that are technically zeotropic blends, but have a smaller range of boiling (bubble) and condensing (dew) points. Also called *near-azeotropic blends* and *near-azeotropic refrigerants*. (9)

negative temperature coefficient (NTC). A device's inverse relation response of decreasing a certain characteristic as temperature increases and vice versa. For example, an NTC thermistor decreases in resistance as temperature increases and vice versa. (14)

net metering. A process in which homeowners can sell excess electrical energy they generate back to the utility company. (44)

networking. The process of connecting with other individuals within a group or industry. (1)

neutral flame. A torch flame with the correct mixture of fuel gas and oxygen that is most efficient in brazing. It has a bluish-white inner cone and an outer flame with a bit of reddish-purple. (8)

neutron. A subatomic particle with no charge that is located in the nucleus of an atom. (12)

newton. A unit of force used in the SI system, equal to the force required to accelerate an object that has a mass of 1 kilogram to 1 m/sec^2. (4)

nitrogen oxide (NO_x). A combination of nitrogen and oxygen atoms that is formed at high temperatures, such as those developed during combustion in an automobile engine. Nitrogen oxide is one of the substances that contributes to smog production. (28)

noise absorber. Any type of material that mutes noise. In forced-air systems, felt-lined or soft-insulation-lined ducts are used to absorb noise. (30)

noise amplifier. Anything that can pick up a small vibration and reflect it at a frequency and direction that effectively increases the noise. This is usually a hard, smooth surface like a wall, ceiling, floor, or other furnishing. (30)

noise carrier. A rigid structure that carries vibrations to places where the sound may be annoying. Floors, ceilings, ducts, doors, and pipes can all act as noise carriers. (30)

noise source. An audible vibration that is loud enough to be heard. This vibration may originate in the heating system, cooling system, or fan mechanism. (30)

non-100% shutoff. A function of a gas furnace ignition control module. When the flame rod does not detect a flame, the control module will close the gas valve but not close the pilot valve. (41)

noncondensables. Foreign substances that can enter the refrigerant circuit of an HVACR system but do not phase change along with refrigerant. These tend to become trapped in the system's condenser and raise head pressure until removed. A common noncondensable is air. (53)

noncondensing furnace. A low-efficiency furnace with an annual fuel utilization efficiency (AFUE) rating between 80% and 90%. Noncondensing furnaces have a single heat exchanger to transfer heat from the combustion gases to the air circulated to the conditioned space. (38)

nonfreezing solution defrost. A defrost system that circulates a heated, nonfreezing solution in tubing near and around the evaporator during the Off cycle to melt ice and frost. (21)

nonintegrated ignition control module. An older type of gas furnace control that can open and close a gas valve, control a spark or hot-surface igniter, and monitor electric interlocks. (41)

normally closed (NC). A term describing the state of electrical contacts being usually closed. NC contacts are open only when their switch or switching device is actuated. (14)

normally closed damper. A damper that is in the closed position when power is not applied to its motor. (36)

normally open (NO). A term describing the state of electrical contacts being usually open. NO contacts are closed only when their switch or switching device is actuated. (14)

normally open damper. A damper that is in the open position when power is not applied to its motor. (36)

nozzle-type humidifier. A humidifier in which water is forced through a restrictive nozzle to create a very fine mist. The fine mist is injected directly into the supply airflow. (35)

N-type material. A negatively charged semiconductor material that has a surplus of electrons. (14)

nucleus. The central part of an atom that consists of protons and neutrons. (12)

Occupational Safety and Health Act (OSHA). A US national code that covers workplace safety for workers and equipment. (2)

off-cycle defrost. A method of defrost in which air from the conditioned space is circulated over the evaporator during the Off cycle. (21)

offset. The difference between the set point and the control point in a closed-loop control system. Offset is sometimes called *error*. (16)

ohm. A unit used to measure electrical resistance, represented by the capitalized Greek letter omega (Ω). One ohm of resistance allows one volt to push a current of one ampere through a circuit. (12)

ohm out. An electrical term meaning to measure the resistance of an electrical load. Only do this with electrical power disconnected and after checking with a voltmeter that no voltage is applied (0 V measurement). (36)

Ohm's law. A mathematical relationship among voltage, current, and resistance in an electrical circuit ($E = I \times R$). (12)

Copyright Goodheart-Willcox Co., Inc.

ohmmeter. A meter used for measuring electrical resistance in an electrical circuit. It may also be used to check for short circuits, circuit continuity, and ground faults. (14)

oil binding. A condition in which the oil picked up by vapor refrigerant does not return to the compressor. The oil forms a layer on the surface of the liquid refrigerant in the evaporator and prevents the refrigerant from evaporating at a rapid rate or at the temperature corresponding to the pressure. (20)

oil burner. A device that controls the burning of fuel oil in an oil-fired heating system. There are two types of oil burners: pot burners and gun burners. (42)

oil burner fan. A fan that provides combustion air for the flame in the combustion chamber of an oil-fired heating system. Also called *blower wheel*. (42)

oil burner motor. A motor that provides power for the fan and fuel unit (oil pump) in an oil burner assembly. Oil burner motors are either split-phase motors or permanent split capacitor (PSC) motors. (42)

oil burner nozzle. A metal piece with a specially sized orifice that controls the amount of fuel oil passing from the air tube into the combustion chamber. An oil burner nozzle is responsible for atomizing, metering, and patterning fuel oil entering the combustion chamber. (42)

oil canning. The sound of expanding and contracting ducts when a blower starts and stops. This can usually be prevented by cross-breaking large ductwork panels. (29)

oil deaerator. In an oil-fired heating system, a device installed in a fuel line that removes air and other gases from fuel oil. (42)

oilless bushing. A method of bearing lubrication in which a motor shaft passes through a sintered bronze bushing that is saturated with oil. (17)

oil level regulator. In a refrigeration system, an oil control device that regulates the level of refrigerant oil within a compressor using a float mechanism. (19)

oil reservoir. A storage vessel that holds a refrigerant oil supply for a compressor or a group of compressors in a refrigeration system. (19)

oil ring. In a reciprocating compressor, a piston ring that lubricates the cylinder wall and prevents excess oil from entering the cylinder. (18)

oil safety control. In a refrigeration system, a form of control that will shut off electrical power to the compressor if the net oil pressure or oil level drops below normal for a certain amount of time. (19)

oil separator. An HVACR system component that removes refrigerant oil from high-pressure refrigerant vapor as both refrigerant and oil leave the compressor. (6)

oil slugging. Excess amounts of oil being pumped out of the compressor due to oil foaming. (18)

one-pipe fuel delivery system. A fuel oil delivery system that uses a single fuel line between the fuel oil tank and the oil burner. (42)

one-pipe hydronic system. A hydronic system in which a single pipe supplies hot water from the boiler and carries return water back to the boiler. The terminal units in a one-pipe system are on branch circuits called secondary loops. (39)

open circuit. An electrical circuit that is interrupted or broken at some point, preventing the flow of current. (12)

open-drive compressor. A compressor that is driven by an external source of mechanical power (usually an electric motor). Also called an *external-drive compressor*. (18)

open end wrench. A wrench with an opening in the gripping head. Used where socket wrenches and box end wrenches cannot be used. (7)

open-loop control system. A type of control system in which the controller sends commands to a controlled device with no detected information from the conditioned space being returned to the controller. (16)

open-loop cooling tower. A cooling tower in which the same water that flows through the water-cooled condenser also flows directly over the cooling tower's wet decks and fill. (33)

open-loop ground-source heat pump system. A type of ground-source heat pump system that uses a well, pond, or lake as its water source, heat sink, and heat source. The body of water also serves as the discharge location for water. (40)

open on rise of differential pressure (ORD) valve. A refrigerant control valve that opens when a certain pressure difference occurs between its inlet and outlet. ORD valves are often used as receiver pressure regulators. (22)

open on rise of inlet pressure (ORI) valve. A refrigerant control valve that opens when inlet pressure rises to a certain preset level and closes when inlet pressure drops below a preset level. ORI valves are often used as condenser pressure regulators and evaporator pressure regulators. (22)

open ribbon. An uninsulated electric heating element that is composed of flat strips to provide more surface area for air contact than a straight, uncoiled open wire. (43)

open wire. An uninsulated electric heating element that is often formed into coils, allowing more wire to be used in a smaller space. (43)

operating cycle. The number of hours that a compressor operates per day. (51)

orifice. A small opening through which only a small amount of fluid can flow. An orifice may be used as a metering device to control refrigerant or other fluid flow or regulate pressure. (20)

O-ring. A flexible ring (usually made of elastomers) installed at the joints between mating parts to prevent leaks. (18)

outdoor coil. One of two refrigerant-circulating heat exchanger coils in a heat pump system. The outdoor coil absorbs or expels heat for the indoor coil. (40)

outdoor design temperature (ODT). In calculating heat loads, ODT represents extremely cold conditions for

Copyright Goodheart-Willcox Co., Inc.

the geographical region where the heating system is installed. (37)

outdoor reset control. An auxiliary control that modifies the operating temperature range of a hydronic system based on the difference between outdoor and indoor temperatures. (39)

outside length. The distance around the outside of a V-belt. A V-belt's size is measured by its outside length. (17)

overdefrosting. A condition in which a defrost cycle continues long enough to raise the temperature of the conditioned space too high. (21)

overfire draft test. A draft test used to measure only the draft in the combustion chamber of a combustion heating system. See also *flue draft test*. (42)

overfiring. A condition in which a combustion heating system creates too much heat, causing a high flue gas temperature and reducing system efficiency. (42)

overflow switch. An electrical switch used to sense liquid level and prevent an overflow condition. A common application of an overflow switch is in an indoor unit of a ductless split system. It turns off the system if condensate is sensed at a certain level to prevent overflow by the continued formation of condensate. (31)

overload. A condition in which too much current flows through an electrical circuit. An overload can lead to excessive heat generation and result in fire or deterioration of electrical insulation. An overload's current is not as high as in a short circuit. (13)

oxidizing flame. A torch flame with more oxygen than a neutral flame, recognized by its small, sharply pointed inner cone and the hissing sound it creates. (8)

oxyacetylene. A torch configuration that mixes pure oxygen and acetylene for an extremely hot flame used for brazing, welding, and cutting. (8)

ozone (O_3). A form of oxygen that has 3 atoms per molecule, instead of two atoms (oxygen, O_2). It can be photochemically produced in nature. It is a disinfectant and is sometimes used in small quantities to purify water or maintain a sterile atmosphere. Large concentrations may be harmful to health. (28)

ozone depletion potential (ODP). A numerical value assigned to refrigerants to compare the destructive potential each refrigerant poses to the ozone layer compared to R-11, which has an ODP of 1. (9)

packaged outdoor air-conditioning unit. A packaged air-conditioning system installed on a concrete pad or supporting structure adjacent to a building with return and supply air ducts between the unit and building. (33)

packaged system. A refrigeration unit designed, built, and shipped by the manufacturer and includes all of the major refrigeration components, piping, and electrical wiring. (49)

packaged terminal air conditioner (PTAC). A type of self-contained ductless air-conditioning system commonly used in hotels and apartment buildings. These are installed in an outside wall cavity and are usually designed to provide cooling and heating. (31)

packaged terminal heat pump (PTHP). A type of self-contained ductless heat pump that can reverse its refrigeration cycle for comfort heating or cooling. (31)

PAHRA. The Partnership for Air Conditioning, Heating, Refrigeration Accreditation, which is an organization that provides accreditation for schools and other training providers with HVACR programs. (1)

parallel circuit. An electrical circuit in which current can flow to and from the power source along more than one path. (12)

parallel compressor rack. An arrangement of compressors piped in parallel with a common suction line, a common liquid line, and a common liquid receiver. These are commonly used in multiple-compressor systems and provide a variable cooling capacity based on demand. (47)

partial vacuum. Any pressure below atmospheric pressure (14.7 psia). (5)

pascal. A unit of pressure used in the SI system equal to 1 newton per square meter. (5)

Pascal's law. A law stating that pressure applied to a confined fluid is transmitted equally and undiminished in all directions. (5)

passively chilled beverage dispenser. A commercial refrigerated dispenser that transports syrup and water through stainless steel tubing that is surrounded by the same ice that is dispensed for use in individual drinks. (47)

passive recovery. A refrigerant recovery method that uses the pressure inside a system or the system's compressor to force refrigerant into an unpressurized container. Passive recovery is only used on smaller HVACR systems. (11)

passive solar energy system. A solar energy system that depends on solar radiation striking directly on the area to be heated. A greenhouse is a good example. (44)

patterning. In an oil-fired heating system, the directing of atomized fuel oil droplets into the combustion chamber in the correct pattern and at the correct angle. (42)

Peltier effect. A phenomenon that occurs when current is passed through the junction of two dissimilar metals, causing heat to be absorbed in one part of the junction and moved to another part of the junction. It is the basis of modern thermoelectric refrigeration. (48)

perfect vacuum. A condition in which pressure cannot be further reduced, equal to 0 psia. (5)

permanent split capacitor (PSC) motor. A single-phase induction motor that uses a single run capacitor in series with the start winding throughout the motor's entire operation. It does not use a centrifugal switch or relay to switch off any capacitors or windings. (15)

personal protective equipment (PPE). Safety equipment worn by a technician to minimize exposure to health and physical hazards. Example include gloves, hard hats, goggles, and respirators. (2)

Copyright Goodheart-Willcox Co., Inc.

phase change material (PCM). A storage medium used in latent thermal energy storage systems that is able to change phase states from solid to liquid or from liquid to solid within the range of operating temperatures and pressures. (44)

phase loss monitor. An overload protection device that monitors the voltage of each phase of a three-phase motor's power supply. A phase loss monitor opens the motor circuit if one of the phases blows a fuse or opens a circuit breaker. (17)

phase splitting. A motor condition where the current flowing through the start winding is out of phase with the current flowing through the run winding. Phase splitting is the means by which single-phase motors create a rotating magnetic field in the stator with enough torque to cause the rotor to start turning. (15)

photoelectric device. A semiconductor device that changes its ability to conduct electricity or produces an electrical signal in response to visible, infrared, or ultraviolet light. (14)

photovoltaic cell. A solar cell that converts light energy into electrical energy through the process of photovoltaics. (44)

pickup voltage. The voltage required in a motor's start winding to energize a potential relay coil, which drops the start capacitor out of the circuit. Pickup voltage is typically generated when a motor reaches around three-fourths of its normal operating speed. (16)

pictorial diagram. An electrical wiring diagram that is used primarily in service or installation manuals to illustrate how electrical devices are connected in a unit. Pictorial diagrams also show the approximate physical location of devices in a unit. (16)

piercing valve. A device that is used to access HVACR systems that have no service ports or access ports. The valve is secured to tubing by being bolted or brazed on. (10)

piezoelectric crystal. An electronic device that vibrates when electric current is run through it. It is commonly used in piezoelectric humidifiers. (35)

piezoelectric (ultrasonic) humidifier. A humidifier that uses a vibrating element to atomize water. (35)

pilot light. A small flame located near a furnace's gas burners that provides the initial heat to ignite a gas furnace. Also called a *pilot flame* or just *pilot*. A pilot light is just one of several different types of ignition methods of gas-fired appliances. (41)

pilot-operated reversing valve. A type of reversing valve that uses a solenoid pilot valve to move the piston and sliding section of tubing in the reversing valve. The solenoid pilot valve has capillary tubes that provide passageways for high-pressure discharge vapor from the compressor to push against the piston in the reversing valve to move it, which changes the inner connection of the tubing stubs and the direction of refrigerant flow. (40)

pinch-off tool. A tool used to isolate parts or sections of tubing by applying pressure to deform and seal the tubing. To permanently seal a pinched tube, apply brazing filler using a torch. (25)

pin punch. A type of punch used to drive retainer pins in or out. (7)

pipe schedule. A term that is paired with a number to indicate a pipe's wall thickness. (8)

pipe wrench. A wrench used to grip pipes and other cylindrical objects. (7)

piston. A reciprocating compressor component that moves up and down in the cylinder to draw in and compress the refrigerant vapor. (18)

piston pin. A small metal cylinder that connects a reciprocating compressor's piston to its connecting rod. (18)

piston ring. In reciprocating compressors, a split metal ring installed in a groove on the piston. Piston rings push outward to form a seal between the side of the piston and the cylinder wall. (18)

pitot tube. An instrument consisting of a tube pointed directly into the airflow that measures total air pressure and static air pressure. When used with a manometer, it can be used to determine air velocity. (27)

plate evaporator. An evaporator fabricated from two metal sheets, welded together, that form a series of passages through which refrigerant flows. (21)

plate heat exchanger. A heat exchange device composed of a set of thin metal sheets that form two separate passageways that share a significant amount of common surface area. (21)

plate humidifier. An evaporative humidifier that consists of a series of porous plates and a water pan. (35)

plenum-mounted humidifier. A central humidifier that is designed to be installed through the side of a return or supply ductwork plenum. (35)

pliers. Multipurpose hand tool used for bending, gripping, and cutting. (7)

plumb. A term describing a perfectly vertical line. Used in installation work. (7)

pneumatic motor. A device consisting of a piston in a cylinder or pressing against a diaphragm that may be used to operate dampers, valves, and switches in a pneumatic control system. (33)

pneumatics. The use of pressurized air to perform certain mechanical actions. (33)

pole. The movable part of an electrical switch. (14)

pollen. The small particles released by plants as part of their reproductive cycle. Since these airborne particles create irritating symptoms and ailments for many people, pollen removal is an important function of air conditioning. (28)

pollen count. A measurement of the amount of pollen in a given space. (28)

pollutant. A substance that is in some way a detriment to comfort, health, and a desirable environment. Three common indoor air pollutants are asbestos, bioaerosols, and radon. (28)

Copyright Goodheart-Willcox Co., Inc.

polyalkylene glycol (PAG) lubricant. A type of refrigeration lubricant designed for use with HFCs. (9)

polyol ester (POE) lubricant. A group of synthetic refrigeration lubricants that are compatible with CFCs, HCFCs, and HFCs. (9)

ponded roof. A flat roof that maintains 2″ to 3″ (5 cm to 8 cm) of standing water, which absorbs heat from the sun and dissipates that heat through evaporation. (46)

portable air conditioner. A self-contained air-conditioning system packaged in one case that is often equipped with wheels so the unit can be rolled where needed to spot cool an area. (31)

portable humidifier. A standalone humidifier placed where a specific humidity level needs to be maintained. (35)

positive pressure. A pressure greater than atmospheric pressure, which is 14.7 psia. (11)

positive temperature coefficient (PTC). A device's direct relation response of increasing a certain characteristic as temperature increases and vice versa. For example, a PTC thermistor increases in resistance as temperature increases and vice versa. (14)

positive temperature coefficient (PTC) relay. An electronic relay that uses a PTC thermistor to control a motor circuit by increasing its resistance as it senses high ambient temperature. (16)

post-condenser loop. A type of condensation control that uses the heat of the liquid line to prevent condensation from forming on a cabinet's surfaces. Also called a *Yoder loop*. (24)

post-purge. A function of a gas furnace ignition control module. After the gas burner has stopped operating, the control module keeps the combustion blower on for a preset time to vent any combustion gases remaining in the heat exchanger. (41)

pot burner. An oil burner that maintains a flame using a carburetor to feed the flame with vaporized fuel oil rising from a small pool of liquid fuel oil. (42)

potential energy. Stored energy. Energy related to an object's position, such as water behind a dam, a suspended weight that could drop, or electrical voltage across a battery's terminals. (4)

potential relay. An electromagnetic relay that operates when a single-phase motor's counter electromotive force (cemf) is sufficient to energize the relay's electromagnetic coil. Potential relays are used to disengage a motor's start capacitor from the circuit. Also called *voltage relays*. (16)

pour point. The lowest temperature at which a refrigeration lubricant will flow. Lubricants with low viscosities have low pour points. (9)

power. The rate at which work is performed. The SI unit of work is the watt, and the US Customary unit of work is the horsepower. (4)

power burner. In gas-fired appliances, a type of gas burner that uses a blower to force both primary and secondary air into the burner tube. (41)

power factor. The ratio of true power to apparent power, given as a percentage. (13)

power factor meter. An instrument used to provide a direct reading of the power factor in an electrical circuit. (17)

power-open/power-closed damper. A damper that requires electrical power to open and electrical power to close. (36)

power-stealing thermostat. An electronic thermostat that draws a small amount of electrical power from the low-voltage side of an HVAC system's control circuit to operate the thermostat's electronics. (36)

preignition. A primary control unit function that occurs when the thermostat calls for heat in an oil-fired heating system. During preignition, the primary control unit energizes the igniter to establish an electric arc before the oil burner motor provides the mixture of fuel oil and air for combustion. (42)

pre-purge. A function of a gas furnace ignition control module. Before ignition is attempted, the control module cycles on the combustion blower to empty the heat exchanger of any combustion gases and to fill it with fresh air, which helps to prevent incomplete combustion and misfires. (41)

pressure. Force per unit of area. The SI unit of pressure is the pascal or kilopascal, and the US Customary unit of pressure is pounds per square inch (psi). (5)

pressure dew point. The temperature at which moisture condenses in pressurized air (air that is not at atmospheric pressure). (47)

pressured water system. A collection of components used in a cooling tower that pumps water through pipes and out of spray heads along the top of wet decks. (33)

pressure-enthalpy diagram. A graph that plots a refrigerant's thermodynamic properties against pressure and heat conditions. Also called a *pressure-heat diagram*. (9)

pressure-enthalpy table. A numerical chart that shows the thermodynamic properties of a refrigerant under saturated conditions. (9)

pressure gauge. An instrument that measures and displays the pressure of a contained fluid. Different types of pressure gauges include high-pressure gauges, compound gauges, and vacuum gauges. (10)

pressure limiter. A device within a TXV that prevents evaporator pressure from exceeding a safe operating limit. (20)

pressure lubrication system. A compressor lubrication system that uses a pump to pressurize oil, which is then distributed to all bearing and other high-wear surfaces through dedicated oil passages. (18)

pressure motor control. A motor control device used to regulate a compressor's motor based on low-side pressure, high-side pressure, or oil pressure. (16)

pressure-reducing valve (PRV). A hydronic system valve installed in the makeup water line that reduces the pressure of the water supplied by the water main to the operating pressure needed by the hydronic system. Also called *feed valve*, *boiler feed valve*, *boiler fill valve*, and other names. (39)

Copyright Goodheart-Willcox Co., Inc.

pressure-regulating valve. A valve that modulates refrigerant flow to maintain a desired pressure. (22)

pressure-temperature (P/T) chart. A table listing boiling temperatures for corresponding pressures. These often list numbers for more than one refrigerant. (9)

pressure-temperature curve. A visual graph of the direct relationship between the pressure and temperature of a saturated refrigerant. (9)

pressure switch. An electrical switch that actuates based on pressure sensed. In heating systems, a device that confirms combustion blower operation through the use of a diaphragm that is sensitive to differences in pressure on each side of the combustion blower. (41)

pressure water valve. A water valve that regulates water flow to a water-cooled condenser based on the valve's bellows' reaction to high-side refrigerant pressure. (33)

prick punch. A type of punch with a sharp point used only in layout work. Also called a *scratch awl*. (7)

primary air (in a combustion heating system). The air mixed with fuel prior to furnace ignition. (41)

primary air (in a forced-air distribution system). The air delivered to a room from the supply duct. (29)

primary coil. The coil of wire in an electrical transformer that is connected to the ac electrical source. As alternating current passes through the primary coil, it creates a magnetic field that induces alternating current in the secondary coil of the transformer. (12)

primary control unit. A type of control device that starts and stops an oil furnace while monitoring variables for safe operation. A primary control unit is equivalent to a gas furnace's ignition control module. (42)

primary heat exchanger. In a combustion heating system, a heat exchanger connected directly to the combustion chamber that transfers sensible heat from the combustion gases to the air circulated to the conditioned space. (38)

primary refrigerant. A refrigerant that absorbs heat from another fluid and rejects it from the system. In a chiller system, primary refrigerant absorbs heat from the secondary refrigerant and rejects the heat from the system. In a cascade refrigeration system, refrigerant in the high-stage subsystem cools the secondary refrigerant and rejects the heat from the system. (33)

printed circuit board (PCB). An insulated board with thin layers of conductive metal placed in strips on the board. The strips act as electrical pathways to connect electronic devices. (14)

processing plant. A plant that freezes food rapidly by exposing as much of it as possible to the lowest possible temperature using a fast-freezing system. (47)

process tube. A small length of tubing installed by the manufacturer, through a compressor's housing so the appliance's refrigeration system can be evacuated, tested, and charged during the assembly process. These are left for technicians to use to access the system if necessary. (25)

product heat load. The heat contained in products that are placed in a refrigerated space. (50)

programmable thermostat. A thermostat that contains a microprocessor that functions as a clock and allows the user to select different conditions for different blocks of time. (36)

proton. A positively charged subatomic particle that is located in the nucleus of an atom. (12)

psychrometric chart. A graph of the various properties of air, such as dry-bulb and wet-bulb temperatures, relative humidity, specific volume, and specific humidity. (27)

psychrometry. The science studying the thermodynamic properties of air and water vapor. (27)

P-type material. A positively charged semiconductor material with holes, or positively charged spaces, that are ready to receive electrons. (14)

pulley. A grooved wheel with two flanges that is used to change rotational direction, increase or decrease rotational speed, or provide mechanical advantage. (17)

pump-down. The relocation of a system's entire refrigerant charge into the liquid receiver, which allows a technician to repair leaks and replace components without having to recover a system's refrigerant charge. (11)

pump-down defrost. A method of defrost in which a liquid line solenoid valve closes before the compressor cycles off in order to remove refrigerant from the evaporator to expedite the defrosting process. (21)

pump-down solenoid. A liquid line solenoid that is closed by the defrost system while the compressor continues to run and pumps down the evaporator's refrigerant into the liquid receiver or high-side refrigerant circuit. (21)

punch. A cylindrical metal tool used for a variety of purposes, such as marking metal, punching holes, and driving out pins. See *center punch*, *drift punch*, *pin punch*, and *prick punch*. (7)

punctuality. Being on time for work and for appointments and also returning from lunch or breaks at the proper time. (1)

purge unit. In low-pressure compression chillers, an auxiliary component designed to remove noncondensables from the refrigerant circuit in order to preserve system efficiency and prevent damage. (33)

purging. The process of removing unwanted air, vapors, dirt, and moisture from a system by flushing them into the atmosphere with a compressed gas (typically nitrogen or carbon dioxide). (8)

push-pull liquid recovery method. A refrigerant recovery process that uses pressure differences to remove liquid refrigerant from an HVACR system. Vapor refrigerant is pulled from the recovery cylinder and pumped into the HVACR system, which pushes the liquid refrigerant out of the system and into the cylinder. (11)

PVC (polyvinyl chloride). A type of white plastic pipe used for cold water supply, drain lines, fresh air inlet, and some furnace exhaust applications. (8)

Copyright Goodheart-Willcox Co., Inc.

PWM solenoid EEV. A refrigerant metering device that uses a pulse width modulation (PWM) signal to control the operation of a solenoid valve for variable refrigerant flow. (20)

queen valve. A service valve that is installed between the condenser and the inlet of the liquid receiver. During normal operation, warm, high-pressure refrigerant liquid flows through it. (10)

quench valve. A thermostatic expansion valve (TXV) that operates based on discharge line temperature and acts as a liquid injection valve from the liquid line to the suction line in truck and trailer refrigeration systems. (48)

quick chiller. A type of commercial refrigeration system that cools hot food rapidly and uniformly without freezing the product. (47)

quick-connect coupling. A coupling that can be connected to the evaporator coil or condensing unit without losing refrigerant or getting air into the system. (32)

radial flow fan. A centrifugal fan in which air leaves the fan at a right angle from the direction the axle is pointing. (29)

radiant hydronic system. A system in which heated water is circulated through plastic or composite tubing that is enclosed in walls or floors and causes the warmed floors or walls to radiate heat into the conditioned space. (39)

radiation. The transfer of heat by heat rays. (4)

radiator. A type of terminal unit in a hydronic system that absorbs heat from water or steam and transfers it to the conditioned space through natural convection. (39)

radon (Rn). An odorless, tasteless, radioactive, inert gas that occurs naturally in soil and rocks and has been shown to cause lung cancer. (28)

range. The set of numbers between and including the cut-in and cut-out values of a control system. (16)

range adjustment. An adjustment that regulates the minimum and maximum temperature or pressure in a control system. (16)

Rankine scale. An absolute temperature scale that uses the same increments as the Fahrenheit scale. 0°R is equal to –460°F. (4)

rated full-load speed. A motor's speed (RPM) under a full load when both the rated voltage and frequency are supplied. (15)

rated voltage. The voltage level where a motor will perform at its best. Also sometimes called *nameplate voltage*. (15)

receiver pressure regulator. An open on rise of differential pressure (ORD) valve that allows hot-gas refrigerant from the compressor discharge line to bypass the condenser and directly enter the liquid receiver when a certain pressure difference occurs between the discharge line and the liquid receiver. Commonly used for head pressure control in low ambient conditions. Also called *discharge vapor bypass valve*, *condenser bypass valve*, *ORD head pressure regulator*, and *hot-gas condenser bypass valve*. (22)

reciprocating. Up-and-down or back-and-forth movement in a straight line. (6)

reciprocating compressor. A compressor that functions by changing the rotational movement of the crankshaft into the reciprocating motion of the pistons. (18)

reclaiming. Processing a recovered refrigerant so that it is chemically pure. This is performed only at a specialized facility. EPA regulations require chemical analysis and testing to ensure purity. (10)

recovering. Removing refrigerant from a system and storing it in an external container, called a recovery cylinder. Refrigerant recovery is performed before accessing a refrigerant circuit for repair or service to prevent the venting of refrigerants into the atmosphere. (10)

recovery cylinder. A refrigerant cylinder designed specifically to store refrigerant recovered from a system. Recovery cylinders are always yellow on top and gray on the bottom. (10)

recovery/recycling machine. A machine that recovers and cleans refrigerant. These machines can be used on site or at a local service shop. (10)

rectifier. An electronic circuit made from an arrangement of diodes that converts alternating current to direct current. (14)

recycle limit. The number of times an oil furnace will try to ignite for a single call for heat before the primary control unit locks out the system. Also called *limited recycle*. (42)

recycle time. The amount of time, in seconds, before an oil furnace's igniter can attempt ignition again after a failed ignition attempt. (42)

recycling. Cleaning a refrigerant for reuse by using filter-driers to separate out contaminants. Unlike reclamation, recycling can usually be performed on the jobsite. (10)

reed switch. An electrical switch that has a pair of electrical contacts mounted on magnetic reeds sealed in a glass tube that are opened and closed by an outside magnet. (36)

refractory material. The fire-resistant material that lines a furnace's combustion chamber. (42)

refrigerant. A substance used in a refrigeration system to absorb heat from a conditioned space and release heat outside the conditioned space. Refrigerants typically have very low boiling points at atmospheric pressure. (6)

refrigerant blend. A mixture of two or more established refrigerants. These are classified as azeotropic, zeotropic, or near-azeotropic. (9)

refrigerant dye leak detection. A leak detection method that involves charging a dye into a refrigeration system. If the system has a leak, the color of the dye can be seen at the point of the leak. (10)

refrigerant jet system. A cooling system that uses waste heat to help pressurize refrigerant and drive it from the evaporator to the condenser. (48)

refrigerant line valve. A valve that controls the flow of refrigerant through system piping. (22)

refrigerant migration. The movement of refrigerant through an HVACR system during the Off cycle. (22)

Copyright Goodheart-Willcox Co., Inc.

refrigerant quality. A description of how much of the mass of a refrigerant is in the liquid state and how much is in the vapor state. The percentage represents the amount of refrigerant in the vapor state. (50)

refrigeration lubricant. A lubricant charged into a refrigeration system to lubricate moving parts. The four main types of lubricants are polyol ester (POE), alkylbenzene (AB), polyalkylene glycol (PAG), and mineral oil (MO). (9)

refrigeration service valve wrench. A wrench used to operate a refrigeration service valve. These may have heads to fit milled square stem ends or may have an adapter to fit into a special socket. (7)

refrigeration system analyzer. An instrument that is the combination of a gauge manifold, temperature sensors, and other sensing elements into one package that includes digital connectivity and often some troubleshooting capabilities. (10)

register. A grille-like device through which heated or cooled air is released into a room. (29)

relative density. The ratio of the mass of a certain volume of gas compared to the mass of an equal volume of hydrogen. Hydrogen is the lightest gas and has a relative density of 1. The heavier the gas, the higher its relative density. (4)

relative humidity (rh). A ratio of the moisture content in the air compared to the maximum amount of moisture (saturation) that the air can hold at its current temperature. (27, 35)

relay. An electrical switch that operates under the control of an outside electrical signal. Relays are commonly used to start or stop other system components, such as a motors. (14)

relief valve. A safety valve that prevents equipment damage or personal injury by venting refrigerant when the system pressure exceeds the maximum safe limit. (22)

remote controller. A building system controller that can control the operation of one or more energy-consuming devices from a remote location. (45)

remote sensing. When the high-voltage electrode used to spark a flame in a furnace and the flame rod used to detect the flame are separate components. (41)

remote temperature-sensing element. A device that reacts to temperature change and sends a signal to a control device. Two common types include above-atmospheric-pressure elements and below-atmospheric-pressure elements. (16)

repair. Service required to fix a system that is not operating correctly (3).

reset limit. The number of times an oil furnace's primary control unit can be reset from a lockout. Also called *limited reset*, *restricted lockout*, or *lockout*. (42)

resistance. An electrical property that measures a material's opposition to the flow of electrons through it. (12)

resistor. An electrical or electronic component used to offer a specific level of resistance in a circuit. (12)

respiration heat. The heat produced by fruits and vegetables in cold storage as their biological processes continue and they absorb oxygen and release carbon dioxide, ethylene gas, and heat. (50)

retarder. An extra spring built into pressure gauges to measure readings at higher pressures. Pressure gauges with retarders will have a change in graduation markings at the high-pressure end of the scale. (10)

retrofitting. Updating an existing refrigeration system to new standards, usually by replacing an outdated refrigerant and certain component parts of the system. (11)

return air duct. A duct carrying air from a conditioned space to the mixing air duct or plenum. (29)

reverse bias. A diode setup that does not allow current to flow through the diode. The negative terminal of a dc power supply is connected to the anode, and the positive terminal is connected to the cathode. (14)

reverse cycle defrost. An air-source heat pump defrost method in which refrigerant flow through the heat pump is reversed, which means the heat pump essentially operates in cooling mode to melt any ice buildup on the outdoor coil but with the outdoor fan off. (40)

reverse cycle hot-gas defrost. A variation of the standard hot-gas defrost in which the flow of refrigerant through the evaporator is reversed. (21)

reverse return hydronic system. A type of two-pipe hydronic system in which all branches are approximately the same length. The terminal unit closest to the boiler has the shortest length of supply piping but the longest length of return piping, and the terminal unit farthest from the boiler has the longest length of supply piping but the shortest length of return piping. (39)

reversing valve. A four-way manifold controlled by a solenoid valve that allows a heat pump to switch between cooling mode and heating mode by causing the refrigerant to flow in either direction. (40)

ribbon burner. A type of gas burner that feeds a fuel gas and primary air mixture along the length of a burner producing a solid flame on top. (41)

rich. An air and fuel mixture in which there is too much fuel and not enough oxygen. (41)

riser (construction). A vertical component. There are a variety of risers associated with different aspects of construction. A common HVAC example is a riser used to install an air-source heat pump's outdoor unit above ground level to avoid accumulated snow from blocking side airways during the cold season. (40)

riser (tubing/piping practice). A length of vertical refrigerant line. (22)

riser valve. A shutoff valve that controls refrigerant flow through a liquid riser or suction riser. (22)

rollout switch. A furnace safety device in the form of a heat-sensing electrical switch located near the burners that is designed to cut off the gas supply if a flame rollout occurs. (41)

Copyright Goodheart-Willcox Co., Inc.

roof mist cooling system. An evaporative cooling system in which small amounts of water are misted on top of the roof. When the water evaporates, it absorbs a relatively large amount of heat from the roof's surface and prevents the heat from entering the structure. (34)

roof pond cooling. A method of evaporative cooling by maintaining a certain level of water covering the surface of a building's roof. The water blocks heat from sun rays and absorbs heat from indoors. Evaporation cools the standing water and system controls maintain the water level. (34)

rooftop unit (RTU). A packaged air-conditioning system designed specifically to be installed on the roof of a building. (33)

room air conditioner. An inexpensive and simple self-contained air-conditioning system that provides cooling to a portion of a building or residence. These are available as window units or through-the-wall units. (31)

root mean square (rms). The value used to equate the heat produced by an alternating current to a direct current value that would produce the same amount of heat. (13)

rotary compressor. A compressor in which vapor compression takes place in spaces between the cylinder wall and sides of an off-center rotor that spins inside the cylinder. (18)

rotating disk humidifier. A humidifier that uses a series of plastic disks covered with shallow grooves. The disks are partially submerged in a water pan. As air passes around the rotating disks, the residual water in the grooves evaporates into the air. (35)

rotating drum–type humidifier. A humidifier that uses a water pan and a rotating drum covered in an absorbent filter sleeve. The bottom portion of the drum is submerged in the water pan. As the drum rotates, it soaks up water from the pan. The water evaporates from the sleeve when the moistened section is rotated into the airstream. (35)

rotor. In an electric motor, an axle-mounted unit that rotates as the polarities of the stator's field poles change. In some cases, a rotor can also be called the *armature*. (15)

router. In BACnet, a device that passes a message from one device to another in a network without changing the form or content of the message. (45)

RSES. The Refrigeration Service Engineers Society, which is an organization that provides educational and certification programs to HVACR professionals of varying experience levels. (1)

run capacitor. A device that uses a stored electrical charge to boost motor torque while the motor is running. Run capacitors also dissipate heat generated by the motor. (15)

running terminal. The motor terminal on a single-phase hermetic compressor that connects to one end of the run winding. The opposite end of the run winding is connected to the common terminal. (15)

run winding. Stator windings that are energized during the entire operation of a single-phase induction motor. Run windings are made of larger diameter wire than start windings, which gives them a lower resistance. (15)

rupture disc. A valve body containing a thin metal disc that bursts before the pressure in a system reaches dangerous levels. Used as a one-time pressure relief valve. (22)

R-value. See *thermal resistance*. (37)

safety data sheet (SDS). A document in a uniform format that includes section numbers, headings, and associated information to communicate the hazards of hazardous chemical products, as required by OSHA's Hazard Communication Standard (HCS). (2)

sail switch. An electrical switch that is actuated by flow pushing against a sail to mechanically change the position of the switch. In a furnace, a sail switch acts as a safety device that confirms combustion blower operation by using a large paddle to catch the blower's draft to open or close electrical contacts. Also called *vane switch* or *airflow switch*. (41)

saturated liquid. In an HVACR system, a refrigerant in liquid form under conditions that would cause some of the liquid to vaporize if any amount of heat were added or if pressure was decreased. (50)

saturated vapor. In an HVACR system, a refrigerant in vapor form under conditions that would cause some of the vapor to condense if any amount of heat were removed from it or if pressure was increased. Saturated vapor is most commonly found in an HVACR system's evaporator and condenser during system operation. (5)

Schrader valve. A type of valve that consists of a hollow tube with a spring-loaded pin that blocks access through the tube. The valve is opened when the pin is pushed down and automatically closes to minimize refrigerant loss. (10)

Scotch yoke. A variation of the reciprocating compressor that has a long piston with an elliptical slot at the bottom of its skirt. The piston is connected directly to the crankshaft pin, which slides from side-to-side in the slot as the crankshaft rotates. Scotch yoke compressors have no connecting rods. (18)

screw compressor. A compressor in which vapor is compressed by a pair of meshing helical rotors. (18)

screwdriver. A hand tool consisting of a handle, a shaft, and a head with a sized and shaped tip, used for turning screws. (7)

scroll compressor. A compressor in which vapor compression takes place between a fixed scroll and an orbiting scroll. (18)

seasonal average COP. The average efficiency of a system throughout a heating or cooling season. (46)

seasonal energy efficiency ratio (SEER). A rating similar to EER that estimates the average efficiency of an air conditioner throughout the entire cooling season. (46)

secondary air. The air added to a furnace's flame after ignition to support combustion. (41)

secondary coil. The coil of wire in a transformer in which voltage is induced by the changing magnetic field

Copyright Goodheart-Willcox Co., Inc.

created by alternating current passing through the primary coil. (12)

secondary heat exchanger. In a combustion heating system, a heat exchanger attached at the outlet of the primary heat exchanger. It transfers both sensible and latent heat from the combustion gases to the circulating air. The transfer of latent heat allows some of the combustion gas to condense to liquid. (38)

secondary loop refrigeration system. A commercial refrigeration system in which a secondary loop circulates a nonphase-changing fluid for absorbing heat from a conditioned space and transfers that heat through a heat exchanger to a phase-changing refrigerant in a direct expansion refrigeration circuit. (49)

secondary refrigerant. In a compression chiller system, a fluid that is circulated to absorb heat from a conditioned space. In a cascade refrigeration system, refrigerant in the low-stage subsystem that provides cooling to the conditioned space. (33)

Seebeck effect. The concept underlying the production of thermoelectricity. When heat is applied to the junction of two dissimilar metals (a thermocouple's hot junction), the temperature difference between the two metals produces a voltage. (14)

selective surface. A special absorber surface used to increase the temperature of a collector. (44)

self-contained air-conditioning system. A comfort cooling system with all parts and controls in a single cabinet. An example is a room air conditioner unit. (31)

self-contained water cooler. A standalone water cooler that has its own water supply from a tank and does not have a drain. (47)

semiconductor. A material or substance that is ordinarily an insulator, but can be made to conduct electricity. A semiconductor's conductivity may be controlled by light, pressure, temperature, and other devices. (12)

semi-hermetic compressor. A compressor that contains a motor and compressor inside a multipart shell that is bolted together. Sometimes called *serviceable hermetic compressor*. (18)

sensible heat. Heat that causes a temperature change in a substance. (4)

sensible heat ratio (SHR). The amount of heat that affects the air temperature compared to the total heat added to or released from the air. (27)

sensing bulb. A sealed fluid-filled sensing device that reacts to heat by changing its internal pressure. A sensing bulb is connected by a capillary tube to a diaphragm or bellows, such as on a TXV or temperature motor control. (16)

sensor. A device that detects and responds to a stimulus, such as a change in temperature or pressure. Most sensors are electronic devices and used in control circuits. (14)

sequencer. A device that closes and opens its electrical contacts on a time delay for energizing a series of electrical loads in sequence. It is used to control when each heating element is energized in an electric furnace or duct heater. (43)

series circuit. An electrical circuit in which current has only a single path to follow. (12)

series loop hydronic system. A system designed so that all of the circulating water passes through each component in the system before returning to the boiler. (39)

series-parallel circuit. An electrical circuit that includes a combination of series and parallel circuits. (12)

server. A controller or device in a building control system that uses BACnet. (45)

service. Work that involves performing scheduled maintenance or troubleshooting and repairing existing systems. (1)

service heat load. The sum of the various heat loads that result from operation of a refrigeration system for a given period of time, usually 24 hours. Includes heat loads resulting from products stored in the cabinet, cabinet air changes, and operation of fans, lights, and other electrical devices inside the cabinet. Also called *usage heat load*. (50)

service valve. A refrigerant valve that enables technicians to seal off parts of a refrigeration system and provide a connection to the system for taking pressure readings and adding or removing refrigerant or oil. When installed at certain points of the system, the service valve is given a specific name. See *discharge service valve (DSV)*, *king valve*, *liquid line service valve*, *liquid receiver service valve (LRSV)*, *queen valve*, *suction line service valve*, and *suction service valve (SSV)*. (10)

servicing. Performing the work needed to correct a problem. (3)

set point. The desired condition in a closed-loop control system. (16)

shaded-pole motor. A single-phase motor that uses shaded field poles instead of a start winding to produce starting torque. One-third of each stator pole is split from the rest of the pole and wrapped with a copper band or copper wire. (15)

shaft seal. On open-drive compressors, a sealing device that is installed between a shaft and the case where it emerges. (18)

shell-and-coil condenser. A water-cooled condenser consisting of a coil of copper water tubing winding around the inside of a metal refrigerant shell. (21)

shell-and-tube condenser. A water-cooled condenser composed of a long refrigerant cylinder filled with straight copper tubes that circulate cooling water. (21)

short circuit. An electrical problem that results when a conductor routes current around a component or an electrical load instead of through it. With no electrical load, a short circuit's current value is very high. (13)

short cycling. When an HVACR system starts and stops too frequently, running for a shorter time than it should. (17)

Copyright Goodheart-Willcox Co., Inc.

shutoff valve. A two-way valve used to block flow through a refrigerant line. An example is a manual valve that blocks or permits refrigerant flow through an evaporator in a multiple-evaporator system. (22)

sick building syndrome (SBS). An indoor air quality condition that can be confirmed when approximately 20% or more of a building's occupants complain of drowsiness, fatigue, eye and skin irritations, or respiratory problems. (28)

side-by-side. A refrigerator-freezer in which the frozen food is on one side of the cabinet and the fresh food compartment is on the other. (23)

sight glass. A small viewport installed in a refrigerant liquid line used to observe fluid flow and may contain a moisture indicator element. (22)

signal word. A specific word used to emphasize hazards and indicate the relative level of severity of the hazard assigned to a GHS hazard class and category. (2)

silicon-controlled rectifier (SCR). A three-terminal semiconductor switching device that conducts current in only one direction. The device's breakover voltage must be exceeded or current must be applied to its gate circuit in order to trigger conduction. (14)

single flare. A flare made with a single thickness of tubing. (8)

single phasing. A condition in which a three-phase motor loses one or more of its three phases. (17)

single-cut file. A type of file that has teeth cut in one direction, used for finishing surfaces. (7)

single-effect absorption system. An absorption system in which all of the heat released in the condensation of the refrigerant is transferred to the cooling water and then dissipated to the atmosphere in the cooling tower. A single-effect absorption system has one generator, while a double-effect absorption system has two generators. (34)

single-phase. A type of electrical power that has a single alternating voltage signal. Most residential power circuits operate on 120 V single-phase power. (13)

single-phase motor. An ac induction motor that runs on a single phase of alternating current. (15)

slave thermostat. In a zoned system, a room thermostat that measures temperature and issues calls for system operation to a master thermostat. See *master thermostat* and *master-slave thermostat design*. (36)

slip. The difference between a motor's synchronous speed and rated full-load speed due to magnetic slippage. (15)

slip ring. A cylindrical piece of conductive material used in an ac electrical generator to transfer the electricity from the wire loop (rotor) to the brushes. (12)

slip ring lubricating system. A motor bearing lubrication system in which a brass ring rests on the motor shaft and dips into the oil well below as the shaft turns to lubricate the bearing. (17)

slotted burner. A type of gas burner that feeds a mixture of fuel gas and primary air through a series of narrow slots. (41)

smoke. A composition of solid particles carried into the atmosphere by gaseous products of incomplete combustion. (28)

smoke test. A test in which a sample of flue gas is passed through filter paper that becomes stained by the smoke. The stained paper is compared with premade samples to gauge whether incomplete combustion is occurring. (42)

SNAP (Significant New Alternatives Policy). The EPA program that evaluates and regulates substitutes for high ODP refrigerants. Its goal is to progress the phase out of older refrigerants and meet the ozone protection provisions of the Clean Air Act (CAA). (9)

snap-action evaporator pressure regulator. An EPR with a definite cut-in pressure and temperature, causing the valve to be only fully open or fully closed. (22)

socket wrench. A type of wrench that consists of a bar or handle with a socket head on one end. (7)

soft lockout. A system shutdown after a furnace fails to light during its trial for ignition (TFI) period. An ignition control module with soft lockout quits trying to ignite the furnace for a specified period of time before attempting ignition again. (41)

soft water. Natural, untreated water with a low mineral content (less than 5 grains per gallon) and no chlorides. The natural source is rainwater. (35)

softened water. Water in which minerals have been removed by the ion exchange process (as with a water softener). Unwanted mineral ions are replaced with water-soluble sodium salts. (35)

solar array. An electrical device consisting of a large array of connected solar cells or solar modules. (44)

solar cell. A cell that converts light energy into electrical energy through the process of photovoltaics. (44)

solar domestic hot water (DHW) system. A system that harnesses solar energy to heat domestic water for tasks such as dishwashing, showering, and laundry. (44)

solar energy. Electromagnetic energy transmitted by the sun. (44)

solar module. An individual solar panel consisting of multiple solar cells, wiring, a frame, and glass. (44)

soldering. A process of joining metal objects with a filler metal that has a melting temperature below 840°F (450°C). (8)

solenoid. An electromagnetic device composed of a coil of wire wrapped around a case with a movable iron core that is called a plunger. These are commonly fitted to a valve body and used to control the opening and closing of valves. (14)

solenoid valve. An automatically controlled valve operated using an electromagnet to open and close a fluid passage with a movable core (plunger). (22)

solenoid water valve. An electric water valve that opens and closes by the operation of a solenoid. (33)

Copyright Goodheart-Willcox Co., Inc.

solid. Any physical substance that keeps its shape and volume even when not contained. (4)

solid desiccant. A drying agent, in solid form, used in a filter-drier to adsorb moisture in the system. (26)

solid-state device. A semiconductor device. An electronic device with no moving parts. (14)

solid-state igniter. A device that uses solid-state circuitry to generate a high voltage necessary to ignite a flame in an oil furnace. (42)

solid-state relay (SSR). A relay that uses electronic components (such as transistors, silicon-controlled rectifiers, or triacs) rather than mechanical components to switch circuits on and off. SSRs are used to start single-phase motors and are often referred to as *electronic relays*. (16)

solvent welding. The process of joining two components of the same plastic material using a solvent that temporarily dissolves the surface polymers, allowing the polymer chains to become entangled. (8)

spark igniter. A device that creates an electric spark across a gap between two electrodes when the ignition control module applies a high voltage to the electrodes. A spark igniter is just one of several different types of ignition methods of gas-fired appliances. (41)

specialty certification. A certification that focuses on a specific topic that is either outside the scope of work for a typical HVACR technician or more specific than topics included in standard professional certification. (1)

specific enthalpy. Enthalpy per unit of mass, measured in Btu per pound or joules per kilogram. (4)

specific gravity. The ratio of the mass of a certain volume of a liquid or a solid compared to the mass of an equal volume of water. (4)

specific heat capacity. The amount of heat added to or released from 1 lb of a substance when it changes 1°F. (4)

specific volume. The volume of a specific amount of gas under standard conditions. In US Customary units, specific volume is the volume of 1 lb of gas at 68°F and 29.92 in. Hg of pressure. In air measurement, the volume of space an amount of air will occupy at a given pressure and temperature. (4)

splash system. A compressor lubrication system that relies on the moving internal parts of the compressor to distribute oil by splashing. (18)

split air-conditioning system. A comfort cooling system that divides up its components into two or more separate locations. A split system's condensing unit may be placed outdoors and its evaporating unit may be placed indoors. (31)

split condenser valve. In a split condenser arrangement, a three-way solenoid valve in the discharge line that responds to ambient conditions or high-side pressure by directing refrigerant into only one of the condenser spaces (summer/winter condenser) during low ambient conditions or directing refrigerant into both condenser spaces (summer condenser and summer/winter condenser) when head pressure is high enough. (22)

split damper. A damper used where an air path branches off into two directions. When it closes one branch of the duct, it opens the other. (29)

split system. A site engineered refrigeration system whose condensing unit, evaporators, piping, and wiring were purchased separately and assembled at the jobsite. These are often custom designed for specific applications. (49)

split-phase motor. A single-phase induction motor that uses the different inductance values of its start winding and run winding to produce phase splitting and achieve initial rotation. (15)

spot cool. Using an air conditioner to cool a specific, limited area. (31)

spring-loaded relief valve. A valve that opens to vent refrigerant under excessive pressure and then closes when enough refrigerant has been released from the system to lower the pressure. (22)

spud. A gas burner attachment with a specially sized orifice designed to direct an exact amount of fuel gas into a burner. (41)

squirrel cage rotor. An electric motor's rotor that is made of metal bars mounted on an iron core. (15)

stack relay. A heat-sensing device that uses a bimetal element to detect an oil burner flame. A stack relay is mounted in the flue of an oil furnace so that it can sense the heat produced by fuel oil combustion. Also called *stack switch*. (42)

stack temperature. The temperature of the flue gas in the flue minus the temperature of the combustion air. Combustion air temperature varies by its source. If it is drawn in from the furnace room, combustion air will be at room temperature. If it is drawn in from outdoors, it will be outdoor air temperature. Stack temperature is indicative of a fuel-burning appliance's combustion efficiency. The lower it is, the more efficient it is. Stack temperature may also be called *net stack temperature*. (41)

standard oil burner. An oil burner with a combustion head that directs combustion air to produce a somewhat lazy and unrestrained flame. (42)

standby. The time when an oil furnace is not burning fuel oil for heat. (42)

standby power. When a refrigerated trailer's refrigeration system is plugged into the electrical grid while the trailer is idle. (48)

standing-pilot ignition system. A type of gas furnace ignition system that uses a continuously burning pilot to ignite the burners when there is a call for heat. (41)

start capacitor. A capacitor used to provide starting torque during the start-up of some single-phase motors. A start capacitor is dropped out of the motor circuit after the motor reaches full speed. (15)

starting collar. A coupling used to join round ducts to a square duct or plenum. Starting collars have a tabbed

Copyright Goodheart-Willcox Co., Inc.

end that is inserted into the plenum and a crimped end over which is inserted the plain end of a round duct. (29)

starting terminal. The motor terminal on a single-phase hermetic compressor that connects to one end of the start winding. The opposite end of the start winding is connected to the common terminal. (15)

start winding. Stator windings that are used for motor starting and additional torque in single-phase induction motors. Start windings are made of smaller diameter wire than run windings, which gives them a higher resistance. (15)

starved evaporator. A condition in which not enough refrigerant flows into the evaporator, resulting in superheat that is too high and a severely reduced cooling effect. (22)

starving. A condition in which liquid refrigerant is present in only part of the evaporator. (20)

static electricity. The accumulation of an electric charge that results when an object picks up negative charges, such as when rubbing against another object. In maintaining air quality, static electricity is used by electronic air cleaners, which build up an electric charge on particles in the air. (12)

static loss. The pressure drop that occurs from the bottom of a riser to its top due to the weight of liquid refrigerant in the line. (51)

static pressure disk. A component mounted inside an oil burner's air tube that is designed to disturb airflow from the burner fan to create turbulence for mixing air and fuel oil. Also called *static disk*. (42)

stationary refrigerant detector. A refrigerant detector in a fixed location that will note an increase of refrigerant vapors or gases in advance of dangerous levels. These may be installed in a mechanical room or use multiple sensors throughout a facility that communicate with a central unit. (2)

stator (centrifugal compressor). The volute casing that holds the rotating impeller of a centrifugal compressor. (18)

stator (electric motor). The stationary part of an electric motor that is attached to the inside of the motor housing. The stator can also be called the *frame*. (15)

steam heating system. A type of hydronic system in which water is heated into steam and piped to radiators throughout the conditioned space. The steam releases heat as it condenses back into a liquid inside the radiator and returns to the boiler for reheating. (39)

steam jet system. A system that provides cooling using high-pressure steam to induce low pressure in an evaporator. (48)

Stirling cycle. A closed thermodynamic cycle that can convert thermal energy into mechanical energy and vice versa. (48)

stoichiometric combustion. A form of combustion in which the burning of fuel occurs with the exact amount of oxygen needed to change the carbon and hydrogen molecules into water and carbon dioxide. Also called *perfect combustion*. (41)

storage cylinder. A large 100- to 150-lb refrigerant cylinder that is used to charge smaller service cylinders. A storage cylinder is often positioned upside-down with the valve at the bottom. (10)

stratification. A gradual difference in air temperature from floor to ceiling because cold air sinks to the floor and warmer air rises to the ceiling. (27)

stratosphere. The layer of the atmosphere that extends from 56,000′ (10.6 mi) up to 170,000′ (32 mi). The stratosphere contains the ozone layer. (27)

street fitting. An angled fitting that is male on one end and female on the other. Street fittings may be threaded steel pipe fittings, brazed/soldered fittings for copper tubing, or plastic fittings, too. The purpose of street fittings is to reduce the number of fittings used for offsets and other configurations (8)

stroke. The distance traveled by a piston, such as in a reciprocating compressor. (51)

strong solution. In an absorption refrigeration system, a solution in which the absorbant is saturated with refrigerant. To contrast, see *weak solution*. (34)

structural insulated panel (SIP). A prefabricated building material made of a foam core between two layers of oriented strand board or plywood. These can be used to build walls and roofing. (46)

subcooler. A type of heat exchanger through which flows liquid line refrigerant of a low-temperature system and the low-side refrigerant of a high-temperature system. A subcooler acts as the high-temperature system's evaporator and absorbs heat to subcool the liquid line refrigerant of the low-temperature system for increased system efficiency. (21)

subcooling. The amount of heat removed from a refrigerant after it has condensed, measured in degrees. Technicians calculate subcooling to determine if systems with thermostatic expansion valves have the correct refrigerant charge. (11)

sublimation. The process of a solid changing directly into a vapor. (48)

suction line. The tubing used to carry refrigerant vapor from evaporator to compressor. (6)

suction line-liquid line heat exchanger. A component that brings the liquid line into contact with the suction line so that heat of the warmer liquid line transfers to the cooler suction line. This protects certain components and increases overall system efficiency. (21)

suction line pressure drop. The pressure difference between the pressures measured at an evaporator outlet and a compressor inlet. (54)

suction line service valve. A low-side service valve connected to the suction line of a system. During normal operation, cool, low-pressure refrigerant vapor flows through it. (10)

Copyright Goodheart-Willcox Co., Inc.

suction pressure. In an HVACR system, another name for *low-side pressure* and *evaporator pressure*. (6)

suction service valve (SSV). A low-side service valve connected directly to a compressor at its inlet, considered a compressor service valve. During normal operation, cool, low-pressure refrigerant vapor flows through it. (10)

sulfur dioxide (SO_2). A common gaseous pollutant produced by burning coal, gas, or oil. (28)

summer condenser. A section of a condenser used in a split condenser arrangement that is used as a condenser in warm and moderate weather and evacuated and isolated during low ambient conditions. This is used as one method of head pressure control for low-ambient conditions. (22)

summer/winter condenser. A section of a condenser used in a split condenser arrangement that is used as a condenser year-round. In low-ambient conditions, the summer condenser is evacuated and isolated, and the summer/winter condenser functions as the only condenser. This is used as one method of head pressure control for low-ambient conditions. (22)

superheat. The amount of heat added to a refrigerant after it has evaporated on the low side (measured in degrees). With capillary tubes system, technicians calculate superheat to determine the correct refrigerant charge. When used with thermostatic expansion valves, superheat refers to the difference in temperature between the evaporator inlet and the sensing bulb. (11)

superheated. A condition in which a vapor's temperature has increased above its boiling point. A superheated refrigerant will need to reduce in temperature (reduce sensible heat) before it can condense into a liquid (reduce latent heat). (6)

supplied-air respirator. A respirator that provides supplemental oxygen. (2)

sustainable design. The use of materials and processes that lower energy costs, reduce operating and maintenance costs, increase productivity, and decrease the amount of pollution that is generated. (37)

swaging. The mechanical enlarging of one piece of tubing to allow another piece of tubing of the same diameter to be inserted into the enlarged tubing. The joint is then soldered or brazed. (8)

sweet water. Tap water used in immersed evaporators. (21)

sweet water bath. A setup with an evaporator immersed in sweet water. (21)

swinging-vane anemometer. An air velocity-measuring instrument that operates on the principle that incoming air will push on a small vane, causing it to deflect at different angles as the air velocity changes. (27)

switch. An electrical device used to open or close any part of an electrical circuit by disconnecting and connecting contacts. (14)

synchronous speed. The speed (RPM) of the rotating magnetic field in an electric motor's stator. A motor runs at synchronous speed if the speed of the rotor equals the speed of the stator's rotating magnetic field. (15)

synthetic dust weight arrestance. A measure of an air filter's ability to remove synthetic dust from the air. It is calculated by comparing the weight of the synthetic dust that gets caught in an air filter being tested and the weight of the amount of dust fed into the air filter. (28)

system lag. A temperature drop occurring between the time the heating system turns on and the time heat is delivered to the conditioned area. (36)

system overshoot. Concerning control systems, when the temperature of a conditioned space exceeds the thermostat's set point. It is a heat lag that occurs when a furnace shuts down and the amount of residual heat that has built up is sent by the blower through the ductwork and into the conditioned space, raising the temperature above the thermostat set point. (36)

tagout (TO). The practice of placing a tag on a mechanism or an electrical switch to inform others that service work is in process and that this mechanism or switch's position should not be changed. (2)

taking initiative. Seeing what needs to be done and doing it without being told. (1)

tap water cooler. A water cooler that has a plumbed water supply and drain connections. (47)

tare weight. The weight of a refrigerant cylinder when it is empty, typically stamped on the outside of the cylinder. (11)

temperature. The measure of the heat intensity or heat level of a substance. (4)

temperature glide. The temperature difference between the bubble point and dew point (vapor and liquid states) of a zeotropic blend. Zeotropic blends are unique because most substances evaporate and condense at a single temperature for any given pressure. See *bubble point* and *dew point*. (9)

temperature limit switch. In a heating system, a safety control that ensures that a measured temperature does not exceed a certain level. (36)

temperature motor control. A device that reacts to the heat it senses by closing or opening an electric switch to start or stop the operation of a motor. (16)

temperature survey. Taking and recording temperature measurements at different locations (such as along a liquid line) and comparing them. (54)

temperature swing. The total difference of the high and low temperature in a room. (36)

terminal unit. A hydronic system heat exchanger that transfers heat from circulating water or steam in a hydronic system to the air in a conditioned space. Also called *heat emitter*. (39)

therm. A quantity of heat equal to 100,000 Btu. (4)

thermal conductance (C-value). The measure of the amount of heat that will pass through one square foot of the

Copyright Goodheart-Willcox Co., Inc.

component in one hour when there is a temperature difference of 1°F between one side of the component and the other. (37)

thermal conductivity (K-value). The measure of the amount of heat that will pass through one square foot of the material one inch thick, in one hour, when there is a 1°F temperature difference between the two sides of the material. (37)

thermal detection system. In a standing pilot appliance, a system of confirming that a pilot light is still burning, usually sensing it with a thermocouple or bimetallic element. (41)

thermal energy storage (TES). The temporary storage of heat energy for later use. (44)

thermal mass. A physical characteristic in which a substance readily absorbs and stores heat. Equivalent to thermal capacitance or heat capacity. (44)

thermal overload. A type of compressor protection device mounted to the compressor shell near the compressor motor terminals and wired in series with the common wire. Its bimetal element controls a normally closed (NC) switch and reacts to compressor and ambient air temperature by opening on a rise in temperature to shut off the compressor. Sometimes called a *bimetal overload*. (19)

thermal precipitation. The collection of dirt around warm-air grilles and windows resulting from a tendency of dirt suspended in the warm air to collect on cooler surfaces. (30)

thermal resistance (R-value). A measure of a material's or building component's resistance to heat transfer. (37)

thermal stability. A lubricant's ability to remain stable in high heat areas. (9)

thermal transmittance (U-value). The rate of heat transfer through one square foot of a structure in one hour when there is a temperature difference of 1°F between one side of the structure and the other. Unlike thermal conductance, it includes an adjustment for air movement and boundary air films. (37)

thermistor. A solid-state device that changes its resistance as its temperature changes. See *negative temperature coefficient (NTC)* and *positive temperature coefficient (PTC)*. (14)

thermocouple. A device made of two dissimilar metals that generates electricity when it is heated. (14)

thermoelectric couple. A junction formed by one N-type material and one P-type material that uses the Peltier effect to produce thermoelectric refrigeration. (48)

thermoelectric module. Several thermoelectric couples connected in series to produce a greater thermoelectric refrigeration effect. (48)

thermoelectric refrigeration. The process of transferring heat energy from one place to another using the movement of electrons, based on the Peltier effect. (48)

thermometer. An instrument used for measuring temperatures. (7)

thermosiphon effect. The natural movement of water resulting from water rising as it heats and falling as it cools. (44)

thermosphere. The layer of the atmosphere that extends from 280,000′ (53 mi) to 2,100,000′ (400 mi). This layer contains the ionosphere and is marked by temperatures that increase with altitude, reaching 2730°F (1500°C). (27)

thermostat. In basic terms, a sensing device that reacts to temperature change. More broadly, a temperature control that starts and stops an HVAC system when preset temperature conditions are reached. (36)

thermostatic expansion valve (TXV). A type of expansion valve metering device that adjusts refrigerant flow rate based on maintaining a superheat value that is being measured by a sensing bulb at the evaporator outlet. By modulating the refrigerant flow rate, the valve can compensate for varying loads. (20)

thermostatic mixing valve (TMV). In a hydronic heating system, a type of mixing valve with a built-in thermostatic element that reacts physically to changes in water temperature at the valve outlet in order to adjust the mixture ratio as needed to maintain the desired temperature. (39)

thermostatic water valve. A water valve that regulates water flow to a water-cooled condenser based on the temperature of condenser exhaust water. (33)

thin film solar cell. A solar cell that is constructed by depositing layers of photovoltaic material on a ceramic, stainless steel, or glass substratum. (44)

three-phase. A type of electrical power that has three alternating voltage signals in a single circuit. The three separate voltage signals alternate in three separate phases, which creates the effect of providing constant power. (13)

three-phase motor. An induction motor that has three sets of stator windings that are energized by three-phase power. Each set of windings is connected to one phase of the three-phase power source. (15)

throw (in air distribution work). In reference to room air movement, the distance air travels from a duct outlet before it slows to 50 fpm. (29)

throw (in electrical work). The movement of an electrical switch's pole. (14)

time-delay fuse. A fuse that will not blow unless an overload condition exists for a certain period of time, typically ten seconds. Also called a *dual-element fuse*. (16)

time-initiated, pressure-terminated defrost timer. A defrost timer that turns on defrost operations at a preset time and turns off defrost operations when a preset pressure is reached. (21)

time-initiated, temperature-terminated defrost timer. A defrost timer that turns on defrost operations at a preset time and turns off defrost operations when the evaporator reaches a preset cut-out temperature. (21)

time-initiated, time-terminated defrost timer. A defrost timer that turns on defrost operations at a preset time and turns off defrost operations at a preset time. (21)

Copyright Goodheart-Willcox Co., Inc.

ton of refrigeration. The refrigerating effect (cooling capacity) equal to the melting of 1 ton of ice in 24 hours, equivalent to 288,000 Btu/day or 12,000 Btu/hr or 200 Btu/minute. (4)

top freezer. A refrigerator-freezer design in which the frozen food compartment is located above the fresh food compartment. (23)

torque. The work performed by a twisting or turning action, such as a rotating motor shaft. (15)

torque wrench. A type of wrench, similar to a socket wrench, that consists of a socket head on one end and a handle with a gauge for measuring torque. (7)

torr. A unit of pressure equal to 1/760 of an atmosphere (1 mm Hg), normally used for measuring vacuum pressure. (5)

total cooling load. A combination of sensible and latent heat gain required to be removed from a building for hot weather cooling. (37)

total effective length (TEL). The greatest effective length for a supply duct run in a system added to the greatest effective length for a return duct run. (29)

total energy management (TEM). A conservation concept in which a building is viewed in terms of its total energy usage, rather than by analyzing the requirements of separate systems. (45)

total energy system. An electricity generating system designed to capture and use waste heat in a building. Also called a *cogeneration system* or *combined heat and power (CHP) system*. (46)

total equivalent length. A calculated value determined by adding of the length of a refrigerant line and the equivalent length for each fitting and valve used along the line. This value is used to calculate pressure drop. (51)

total heat load. The sum of the heat loads resulting from heat leakage, air changes, stored products, and miscellaneous heat sources. (50)

total heat loss. The amount of heat required to be added to a building in Btu/hr for cold weather heating. (37)

total heat of rejection (THR). The total heat load for a refrigeration system and the energy added to the refrigerant by the compressor. A value referenced when selecting a system's condenser. (51)

total pressure drop. In reference to blower sizing, the difference between the supply air duct static pressure and the return air duct static pressure. (29)

toxicity. A measure of the harm that exposure to a substance can cause a person. ASHRAE Standard 34 classifies refrigerants as either Class A (nontoxic) or Class B (toxic). (9)

transducer. A device that converts an input signal from one form of energy to an output signal of another form of energy. (14)

transformer. Electromagnetic device used to transfer an alternating current from one coil of wire to another through a magnetic field. (12)

transistor. A layered, three-terminal semiconductor device that is used to either switch or amplify an electrical signal. (14)

triac. A solid-state device with three terminals that conducts current in both directions. Current must be applied to its gate circuit in order to trigger conduction. It will only stop conducting when current drops below its preset holding current threshold. (14)

trial for ignition (TFI). The limited amount of time that an ignition control module gives an igniter to ignite a gas burner flame. TFI is usually measured in seconds. (41)

trigeneration. In a combined heat and power (CHP) plant that generates electricity, using some of the steam for heating and some of the steam to power an absorption chiller. Also called *polygeneration*. (34)

triple evacuation. A method of evacuating a refrigeration system in which a technician uses a vacuum pump to pull a vacuum of 28 in. Hg three times. After the first and second time the vacuum is pulled, the system is charged back to atmospheric pressure using nitrogen. (11)

tripped circuit breaker. A circuit breaker (electrical overload protection device) that has opened due to high current and must be manually reset. (16)

troposphere. The layer of the atmosphere that extends from sea level at the equator to an altitude of 56,000′ (10.6 mi). This layer contains 75% of the earth's air. (27)

trouble code. A form of visual communication used by a unit to indicate a malfunction. Trouble codes are typically communicated using a flashing LED on the unit. (3)

troubleshooting. A systematic analysis of a problem to determine the proper corrective action. (3)

troubleshooting chart. A chart that lists common troubles, symptoms, their causes, and remedies. The chart can be used as a general guide for identifying system problems. (25)

true power. The actual power used by a circuit, measured in watts. (13)

tube-within-a-tube condenser. A water-cooled condenser consisting of an inner tube through which water flows in one direction and a surrounding outer tube through which refrigerant flows in the opposite direction. (21)

tubular cased wire. An electrical heating element surrounded by magnesium oxide powder and enclosed in a heat- and corrosion-resistant steel tube. The tubular casing protects against electrical shock while still allowing the element to reach high temperatures. (43)

twist drill bit. A type of drill bit with a straight shank and fluted shaft, commonly used for drilling holes in metal, wood, and plastic. (7)

two-pipe fuel delivery system. A fuel delivery system that has a supply line from the fuel oil tank to the oil burner and a separate return line running from the oil burner back to the fuel oil tank. (42)

two-pipe hydronic system. A hydronic system in which one pipe supplies hot water from the boiler to the terminal

Copyright Goodheart-Willcox Co., Inc.

units and another pipe carries return water from the terminal units back to the boiler. (39)

two-stage furnace. A furnace designed to produce two different levels of heating operation, allowing it to adjust heat output to meet demand. (38)

ultimate carbon dioxide content. In reference to furnaces and boilers, the specific amount of carbon dioxide by volume that is present in flue gas when the exact amount of air is supplied to achieve complete combustion. (41)

ultimate vacuum. A specification of a vacuum pump indicating the highest vacuum that a vacuum pump can pull, typically measured in microns. Also called *blank off pressure*. (10)

ultrasonic. A sound frequency above the range of human hearing. (25)

ultrasonic leak detector. An instrument that detects sound waves that are beyond the range of human hearing, such as the sound of vapor escaping from a pressurized system. (10)

ultraviolet lamp. A lamp that produces ultraviolet light, which is commonly used to help control bacteria and mold growth in HVACR applications. (47)

under-duct humidifier. A central humidifier that is designed to be installed through the bottom of a return or supply ductwork. (35)

ungrounded conductor. A hot wire connected to the phase lines of a transformer. (13)

unintentional voltage drop. A condition in which the applied voltage from a power source is unintentionally reduced in a circuit. This may be down to a level that is too low for safe use on electrical loads in the circuit. (13)

unit heater. A ductless, forced-air heating unit designed to heat a large area or to be used in a specific heating application. (38)

unitary central air-conditioning system. A system with all the components needed to heat, cool, dehumidify, filter, and move air included in one unit. (32)

unloader. A mechanism that reduces the load on a compressor to aid startup or to modulate a compressor's capacity. An unloader may be operated mechanically, electrically, or hydraulically. (18)

unvented attic. An attic that is closed off and essentially made into part of the conditioned space, often by heavily insulating the underside of the roof to prevent heat loss and heat gain. (29)

upflow furnace. A furnace in which return air is taken in from the bottom and forced upward around the heat exchanger and into the supply plenum. It is commonly installed in basements where ductwork runs above the level of the furnace. (38)

upright freezers. Freezer units that have the door on the side of the unit, like a refrigerator. (23)

U-value. See *thermal transmittance*. (37)

UVG. An acronym for *ultraviolet germicidal*. This refers to the use of the C band of ultraviolet light (UVC) in ductwork to kill microorganisms, such as viruses, bacteria, and fungi. (28)

vacuum gauge. An instrument for measuring pressures below atmospheric pressure. (10)

vacuum pump. A device used to evacuate a refrigeration system of moisture and contaminants by creating a very low pressure inside the system. (10)

valve adapter. A device used for connecting gauges and charging cylinders to a hermetic system. One part of the adapter has a removable valve stem that operates a small needle valve mounted in the other part of the adapter, which is installed on the compressor. (25)

valve core. The functional, internal part of a valve. Schrader valves often serve as valve cores for access valves and service ports on service valves. The removal of valve cores allows increased vapor flow for certain service procedures, such as pulling a vacuum. (10)

valve core remover. A tool used to remove a valve core. One type can be used when the system is empty (no refrigerant charge), and another specialized tool with a long stem is used to remove valve core when the system is charged or sealed off. (10)

valve plate. In a reciprocating compressor, the metal plate between the cylinder head and the cylinder block on which the valves are installed. (18)

vane anemometer. An instrument that measures air velocity using a small propeller. The propeller is placed in the airstream and revolves as air flows past the blades. (27)

vaporizing humidifier. A humidifier that uses its own heat source (electric heating coils) to create steam. The steam is added to the air to increase its humidity. (35)

vapor recovery method. An active refrigerant recovery method that uses a recovery machine to draw out vapor refrigerant from both sides of a system. (11)

variable frequency drive (VFD). A controller that changes the speed of a motor by varying the frequency of the electrical signal supplied to the motor. (15)

variable refrigerant flow (VRF) system. A refrigeration system that uses system controls and a variable-speed compressor to regulate the flow and volume of refrigerant pumped to match system capacity to the demand cooling load. Also called a *variable refrigerant volume (VRV) system*. (31)

vented attic. An attic that has vents or air openings between its inside and the outside. In the summer, hot air can escape. In winter, moisture and heat leakage from the conditioned space can escape to prevent ice dams from forming. (29)

ventilation. The exchange of air between an enclosed space and an outside source. (27)

venturi effect. The reduction in pressure that occurs when a fluid flows through a constricted section of pipe. The fluid speeds up as it passes through the constricted section, resulting in a decrease in pressure. (41)

very hard water. Well water that is untreated and has a mineral content that exceeds 15 grains per gallon of water. (35)

vibration absorber. A flexible type of refrigerant line that reduces or dampens any vibration or physical motion

Copyright Goodheart-Willcox Co., Inc.

transmitted to it in order to prevent the formation of leaks and damage to parts of the system. (19)

viscosity. A fluid's resistance to flowing. A high-viscosity fluid flows very slowly and a low-viscosity fluid flows freely. The term can also refer to a rating of a fluid's ability to flow at different temperatures. (9)

vise. A clamping apparatus used to hold parts for drilling, filing, or assembly. (7)

volatile fluid. A fluid that vaporizes at a low temperature. Volatile fluids are used in sensing bulbs due to their ability to change pressure in response to changes in temperature. (16)

volt. A unit of electromotive force. One volt is the amount of electromotive force required to send one ampere of current through a resistance of one ohm. (12)

voltage. The electrical force or electrical pressure created by a potential difference in atomic charges between two points. Also called *electromotive force*. (12)

voltage drop. The voltage applied across an electrical load that is causing current to flow through it. Intentional voltage drops are good, while unintentional voltage drops can cause circuit problems. (12)

volt-ampere (VA). A unit of electrical power, equivalent to the watt. Apparent power and transformer ratings are commonly expressed in volt-amperes. (13)

voltmeter. An instrument used to measure the potential difference, or voltage, between two points in an electrical circuit. (17)

volumetric efficiency. In reference to compressors, the actual volume of vapor pumped divided by the theoretical volume of the compressor cylinder. (51)

volute. Spiral shaped, with a gradually decreasing cross-sectional area along the perimeter. Used to describe the shape of the stator of a centrifugal compressor. (18)

vortex tube. A simple device that provides cold air by separating it from hot air. (48)

walk-in cabinet. A large, heavily insulated refrigerated space used for storing various products in commercial applications. Also called a *butcher box*. (47)

water capacity (WC). The weight of the volume of water needed to fill an entire recovery cylinder of a given size. The maximum amount of refrigerant that can be charged into a cylinder is 80% of the water capacity by weight. (11)

water coil. In ground source heat pumps, a heat exchanger in which heat is transferred between refrigerant from the indoor coil and water from the ground loop or water loop. In general usage, any heat exchange coil through which water flows in one passage and refrigerant through an adjacent but isolated passage. (40)

water-cooled condenser. A condenser that uses water as the medium into which system heat is expelled in order to desuperheat, condense, and subcool the high-pressure refrigerant coming from the compressor. (21)

water cooler. A refrigeration system designed to cool and dispense drinking water. Also called a *drinking fountain*. (47)

water defrost. A method of defrost that runs tap water over the evaporator when the refrigeration system is off. (21)

water hammer. A single, distinct thump (rap) produced in some water pipes just as a valve closes. (54)

water level/conductivity probe. A device used to sense the level of the water in an ice machine's sump or water reservoir. (53)

water loop. In ground-source heat pump systems, a loop of polyethylene tubing running to and from a water coil. The loop of tubing is submerged in a body of water. Water inside the loop is pumped from the water coil to the body of water, where it absorbs or rejects heat, before returning to the water coil. (40)

water-source heat pump (WSHP). A type of ground-source heat pump that uses water as a heat-transfer medium by circulating it through a secondary circuit placed underground or underwater. A water coil functions as the heat exchanger between the water in the secondary circuit and the refrigerant in the heat pump. (40)

water valve. A valve that stops, allows, and regulates the flow of water through water-cooled condensers and cooling towers in commercial HVACR systems. (33)

watt (W). An SI unit of power equal to the force of one newton moving through a distance of one meter in one second. Also, a unit of electrical power. One watt is the electrical power produced when one ampere (1 A) of current flows through an electrical component due to a potential difference of one volt (1 V). (4)

Watt's law. A mathematical relationship among power, voltage, and current in an electrical circuit ($P = I \times E$). (13)

wattmeter. An instrument used to measure the true power, or wattage, used by a circuit or an electrical load. A wattmeter is connected in series with the circuit or load being measured. (13)

wax separation. The precipitation of wax out of refrigeration lubricant at low temperatures, which can cause clogs in a refrigeration system. (9)

weak solution. In absorption refrigeration systems, a solution in which the absorbant is not fully saturated with the refrigerant and could absorb more. To contrast, see *strong solution*. (34)

wear gauge. A gauge used to determine the wear on a product, such as a belt, sheave, or other mechanical part. (54)

weather. Conditions in the atmosphere, including temperature, wind velocity and direction, clouds, moisture, and atmospheric pressure. (27)

weight. In physics, the gravitational force exerted by the earth on an object. In general usage, weight refers to the relative mass of an object. (4)

weight valve. A simple valve consisting of a weighted needle, adjustment spring, valve seat, and an inlet and outlet ports. Used in systems with a high-side float valve, a weight valve is used to limit the flow of refrigerant

Copyright Goodheart-Willcox Co., Inc.

and create a pressure drop between the liquid line and evaporator. (20)

wet-base boiler. A boiler in which the water surrounds the combustion area. (39)

wet-bulb temperature. A temperature measurement that takes into account the cooling effect of evaporation. Wet-bulb temperature increases as relative humidity increases. (27)

wet decks. Structures, within cooling towers, that are composed of fill and designed to increase contact between air and water. (33)

wet roof cooling. A method of cooling indoor temperature using the evaporation of water on a building's roof. (34)

wet-rotor centrifugal pump. In a hydronic system, a circulating pump with bearings that are lubricated by the circulating water rather than a petroleum-based lubricant. (39)

wet underfloor radiant heating system. A radiant heating system that consists of tubing embedded in concrete. (39)

Wheatstone bridge. An electronic circuit used to detect changes in a thermistor's resistance. A temperature change causes the resistances in the bridge to become unbalanced, which alters the bridge's output voltage and sends a signal to the controller. (16)

whole house fan. A high-volume fan that is placed between the conditioned space and a vented attic. It can provide whole house ventilation by drawing in outside air through open windows and blowing through a vented attic. It may also be referred to as an *attic fan*. (29)

wick lubricating system. A bearing lubrication system in which a fabric draws up oil from a well or reservoir in the end bell to lubricate the bearing and motor shaft. (17)

Wi-Fi enabled thermostat. A thermostat that can be controlled wirelessly from anywhere in the home or the world. (36)

windchill index. A measure of the combined effect of temperature and wind speed. Also called *chill factor*. (27)

with respect to. See *WRT*. (30)

work. In physics, a force multiplied by the distance through which it travels, expressed in foot-pounds or newton-meters. (4)

work hardened. The hardening of soft copper tubing that occurs due to repeated bending or hammering. Work-hardened tubing is susceptible to cracking at stress points when flared. (8)

workstation. A building control interface device used to monitor, control, and coordinate system functions. (45)

wrench. A hand tool that is used to grip and turn an object, such as a nut or bolt. (7)

WRT. Initials that stand for the phrase *with respect to*. This is used to indicate the reference to which a pressure reading is being compared. See text covering *blower door testing* and *duct testing*. (30)

Yoder loop. In domestic refrigerators and freezers, a liquid line loop that is routed around doors and openings to prevent condensation. Also called a *post-condenser loop*. (24)

Y tube. A Y-shaped tubing that allows an inlet to split into two outlets. This is widely used in ductless split systems to distribute refrigerant to indoor units that are connected in parallel. (32)

zeotrope. A refrigerant blend that has a range of boiling and condensing points because each refrigerant in the blend acts independent of the others. Also called *zeotropic blends* and *zeotropic refrigerants*. See *bubble point*, *dew point*, and *temperature glide*. (9)

zerk fitting. A grease fitting installed in a mechanical part, like a bearing collar. An ordinary grease gun can be connected to the zerk fitting to apply grease to the part. (17)

zone valve. In a hydronic system, a valve that regulates the flow of heated water through a zone based on the signal it receives from a room thermostat. Also called *zone control valve*. (39)

zoned system. An HVAC system designed to heat or cool different areas of a building to different comfort, humidity, and ventilation standards. (36)

Copyright Goodheart-Willcox Co., Inc.

Index

100% shutoff, 1129
100% shutoff with continuous retry, 1129

A

above-atmospheric-pressure element, 359
above gap, 1165
abrasives, 129
ABS (acrylonitrile-butadiene-styrene), 141
absolute temperature scale, 60–61
absorbant, 900
absorber, 1221
absorption, 901
absorption and evaporative cooling systems, 898–923
    cooling systems, 902–914
    evaporative cooling, 917–920
    refrigeration systems, 900–902
    system service, 914–917
absorption cooling systems, 902–914
    commercial, 907–914
    construction, 904–905
    heat pumps, 905–906
    materials, 905
    residential, 902–907
absorption refrigeration systems, 900–902
    absorbants and refrigerants, 900–901
    basic cycle, 901–902
    continuous-cycle absorption system, 901
    intermittent absorption system, 901
    types, 902
absorption system service, 914–917
    ammonia-based absorption systems, 915
    lithium bromide-based absorption systems, 915–917
a/c. *See* air conditioning
AC. *See* alternating current
ACCA. *See* Air Conditioning Contractors of America
ACCA Manual D, 774–775
acceleration constant, 58
access port, 211
access tools, 795
access valve lock, 844
accumulators, 99, 461–462, 1088–1089
AC generator, 284
ACH_{50}, 791
acid test kit, 673
AC motor, 330
active recovery, 240
active solar energy system, 1224
actuator, 384
adaptive defrost, 625
adiabatic compression, 75, 1370
adiabatic expansion, 1370
adjustable air band, 1167
adjustable wrench, 109
adsorbing capabilities of desiccants, 677
adsorption, 487, 562
affinity, 900
AFUE. *See* annual fuel utilization efficiency
AHRI. *See* Air-Conditioning, Heating, and Refrigeration Institute
AHRI guideline K, 246
air, 688
air-bound, 1066
air change, 791
air changes per hour (ACH), 927
air circulation, 747–748
    return air ducts, 748
    room air movement, 748
air cleaning, 730–739
    air filters, 730–734
    electronic air cleaners, 734–736
    ionizing air purifiers, 736–737
    ultraviolet light, 737–739
air coil, 1097
air conditioners
    coefficient of performance, 1270
    energy efficiency ratio (EER), 1268–1269
    HVAC equipment efficiency, 1268–1270
    seasonal energy efficiency ratio, 1269–1270
air conditioning (a/c), 688
air conditioning and refrigeration (ACR) tubing, 138
Air Conditioning Contractors of America (ACCA), 774
Air-Conditioning, Heating, and Refrigeration Institute (AHRI), 246
air-cooled condensers
    checking, 1476–1481
    definition, 535
    determining head pressure, 1479–1480
    installing, 1403
    troubleshooting outdoor condensers, 1480
air-cooling evaporator, 512
air curtains, 781
air defrosting, 513
air density, 1152
air distribution, 744–785
    air circulation, 747–748
    air curtains, 781
    air ducts, 753–768
    air properties and behavior, 746–747

Copyright Goodheart-Willcox Co., Inc.

basic ventilation requirements, 748–753
duct sizing, 768–775
fans, 775–781
air ducts, 753–768
dampers, 766–768
duct construction, 756–762
duct dimensions, 763–765
elbows, 768
fiberglass and other nonmetal ducts, 762–763
registers, diffusers, and grilles, 765
types of duct systems, 753–756
air exchange, 84
air filters, 730–734
carbon, 733
definition, 730
disposable, 731
electrostatic, 731–733
HEPA, 733
maintenance, 733–734
measuring efficiencies, 734
washable, 731
airflow friction chart, 773
airflow measurement, 788–793
air handler flowmeter, 789
blower door testing, 789–792
duct testing, 792–793
flow hoods, 789
visible airflow indicators, 788–789
airflow switch. *See* sail switch
air handler flowmeter, 789
air inlet collars. *See* adjustable air band
air leakage, 1014
air movement and measurement, 686–717
air movement, 705–714
air velocity measurement, 707–711
atmosphere and air, 688–702
climate, 688
comfort conditions, 702–705
factors affecting indoor air conditions, 714–715
wind, 706–707
air pollutants, 720–724
gaseous pollutants, 721
solid pollutants, 720–721
air properties and behavior, 746–747
heat in air, 746–747
stratification, 747
weight, 746
air-purifying respirator, 34
air quality, 718–743
air cleaning, 730–739
air pollutants, 720–724
indoor air quality (IAQ), 724–730
indoor air quality standards and guidelines, 720
indoor air quality systems, 739–740
air scoop, 1047
air separator, 1047
air-side economizer, 863
air-source heat pump (ASHP), 1083
air temperature, 693–696
degree days, 695–696
dry-bulb temperature, 693
perception of temperature, 694–696
wet-bulb temperature, 693–694
air-to-air heat pump, 1083
air-to-water heat pump, 1084
air tube, 1162
air velocity measurement, 707–711
anemometers, 707–709
pitot tube and manometer, 709–711
stratification, 713–714
ventilation, 711–713
air vent, 1047
alcohol additives and filter-driers, 561
alkylbenzene (AB) lubricant, 190
Allen wrenches. *See* hex key wrench
alternating current (ac), 277
ambient temperature, 62
American Society of Heating, Refrigerating and Air-Conditioning Engineers (ASHRAE), 688
American Wire Gage (AWG), 296
ammeters, 394–395
clamp-on, 394–395
definition, 394
in-line ammeters, 395
amperage relay. *See* current relay
ampere, 272
anemometers, 707–709
anhydrous ammonia, 915
annealing, 138
annual fuel utilization efficiency (AFUE) rating, 1131
anode, 311
anti–short cycle control, 1452
apparent power, 294
aquastat, 1060
argon, 689
armature. *See* rotor
asbestos, 721
ash content, 1152
ASHP. *See* air-source heat pump
ASHRAE refrigerant safety classifications, 178
ASHRAE Standard 34, 30, 688, 720
ASP. *See* available static pressure
aspect ratio, 764
atmosphere, 80
atmosphere and air, 688–702
air temperature, 693–696
humidity, 690–693
physical properties of air, 690
psychrometric properties of air, 696–702
atmospheric balancing, 1498
atmospheric dust spot efficiency, 734
atmospheric gas burner, 1123

Copyright Goodheart-Willcox Co., Inc.

atom, 272
atomization, 1165
atomizing humidifier, 931
automatic defrost system, 622
automatic expansion valves (AXVs), 493–496
    bellows-type, 495
    bleeder or bypass, 495–496
    definition, 493
    design, 494–496
    diaphragm-type, 495
    operation, 493–494
auxiliary heat, 1104
available static pressure (ASP), 770
Avogadro's law, 83
AWG. *See* American Wire Gage
AWG wire sizes, 297
axial flow fan, 775
AXV. *See* automatic expansion valves (AXVs)
azeotropes, 172–173

B

backflow preventer, 1044
back seated, 207
BACnet, 1253–1256
    definition, 1253
bacteria, 721
baffles, 517
balanced pressure steam trap, 1064
balance point, 1104
balancing, definition, 797
balancing pressures. *See* atmospheric balancing
balancing valve, 1042
bar, 79
barometric damper, 969
baseboard heating elements, installing, 1213
baseboard receptacle outlets, 1209
basin heater, 890
Beaufort Scale of wind velocity, 706
below-atmospheric-pressure element, 359
belt-driven compressor, 425
bending spring, 145
bid, 8
biflow bypass TXV, 1091
biflow metering TXV, 1092
biflow thermostatic expansion valve, 1091
bimetal coil, 360
bimetal device, 360
bimetal disc, 361
bimetal steam trap, 1064
bimetal strip, 360
bioaerosols, 720
biocide tablet, 832
blank-off plate, 845
blast chiller, 1291
blast freezer, 1291
blast tube. *See* air tube
bleed resistor, 401
blowback, 1180
blowdown, 885
blower, 1022
blower controls, 1029–1031
blower door testing, 789
blown fuse, 376
boilers
    classifications, 1037–1039
    condensing, 1037
    conventional, 1036
    definition, 1036
    inspection and maintenance, 1074–1075
    instantaneous, 1036
    water treatment, 1038
boiling temperature at atmospheric pressure (chart), 189
bolt, 128
bonding, 301
bonnet, 1130
booster compressor, 439
booster pump, 1161
bore, 1386
bottom freezer, 602
Bourdon tube, 201
box end wrench, 108
Boyle's law, 81, 1349
brazing, 157
    area, isolating, 673
    moisture indicators, 1411
    near a drier, 561
    valves, 1410
breaker strips, 682
BRI. *See* building-related illness
brine solution, 514
British thermal unit (Btu), 62
brushes, 129, 284
Btu. *See* British thermal unit
bubble point, 174
bubble solution, 220
building control protocols, 1253–1256, 1271
    BACnet, 1253–1256
    LonTalk, 1256
    Modbus, 1256
building control systems, 1248–1250, 1271
    definition, 1248
    energy-saving components, 1271
    functions, 1249
    system selection and usage, 1249–1250
building efficiency, 1262–1268
    commercial construction, 1268
    determining heating and cooling costs, 1268
    duct insulation, 1262
    energy-efficient construction, 1267
    insulation and vapor barriers, 1263–1266
    roof construction, 1266

Copyright Goodheart-Willcox Co., Inc.

building inspector, 9
building-integrated solar module, 1232
building-related illness (BRI), 730
built-up terminal, 344
burnout, 672
burnout filter-drier, 1504
bushing, 409
butcher boxes. *See* walk-in cabinet
butterfly damper, 766
bypass damper, 969
bypass humidifier, 929
bypass plug, 1159

C

cabinet
  areas, volume, and thickness of insulation (table), 1358
  insulation, moisture and ice, 648–649
cad cell, 1172
calculating work (formula), 57
callback, 45
cap screw, 128
capacitance, 275
capacitive reactance, 294
capacitor, 275
capacitor-start, capacitor-run (CSCR) motor, 334
capacitor-start, induction-run (CSIR) motor, 333
capacity check, 1458
capillary action, 154
capillary tubes, 472–476
  applications, 473–476
  capacities, 473
  definition, 472
  dimensions used in systems, 475
  fittings, 473
  problems, diagnosing, 662–664
  servicing, 676
  system restarting, 643
carbon dioxide (CO_2), 176, 689, 722, 1119
carbon monoxide (CO), 721, 1118, 1120, 1138
carburizing flame, 154
career clusters, 6
career planning, 4–11
career search, 11–15
  application process, 12
  cover letter, 12
  internship, 12
  interview skills, 12
  job application form, 12
  résumé, 12–14
  sources for career opportunities, 11
  success in workplace, 15–16
career websites, 11
cascade refrigeration systems, 1342–1343
  off cycle balancing, 1343
  refrigerants, 1343
Category I furnace, 1134
Category II furnace, 1134
Category III furnace, 1134
Category IV furnace, 1134
cathode, 311
cavitation, 1065
Celsius scale, 60
  converting between Fahrenheit and Celsius degree-days, 1268
  temperature conversion formula, 60
  temperature conversion table, 1562–1565
cemf. *See* counter electromotive force
center punch, 119
Centigrade scale. *See* Celsius scale
central air conditioning, 836–838
  condensing unit, 843–844
  electrical wiring, 847–848
  life cycle cost analysis, 843
  refrigerant lines, 845–847
  replacing HVAC system, 843
  servicing, 850–852
  unitary systems, 837
central air-conditioning system, 836
central humidifier, 928
centralized computer control, 1252
centrifugal compressor, 444
centrifugal force, 445
centrifugal switch, 333
certification, 16–19
  certifying organizations, 18
  EPA certification, 17–18, 1566–1572
  professional and specialty, 17
  student assessments and entry-level certifications, 17
CFC phase-out date, 1569
CFC refrigerants. *See* chlorofluorocarbons (CFCs)
cfm. *See* cubic feet per minute (cfm)
cfm_{25}, 792
cfm_{50}, 791
charge compensator tank, 1089
charging a system, 258–266
  charging by refrigerant weight, 259–265
  charging commercial systems, 1415–1418
  charging refrigerant oil into a system, 1505–1507
  check refrigerant charge, 1430–1431
  determining refrigerant charge, 260
  general guidelines, 259
  high-side system charging, 1416–1418
  low-side system charging, 1415–1416
charging cylinder, 260
Charles' law, 81, 1349
check valves, 567
  heat pump applications, 568
  multiple-evaporator applications, 567–568
chemical cleaners, poisonous, 1482

Copyright Goodheart-Willcox Co., Inc.

chemical hazards, 31–33
chemical hypersensitivity. *See* multiple chemical sensitivity (MCS)
chest freezer, 599
CHI. *See* Comfort-Health Index
chillers, 872–884
capacity control, 883–884
centrifugal compressor, 882–883
chiller compressors, 878–884
high-pressure compression chillers, 876
hybrid chiller systems, 873
low-pressure compression chillers, 876–878
lubrication system, 883
operation, 884
purge units, 878
reciprocating compressor, 879
screw compressor, 882
scroll compressor, 880–881
secondary emission-collection devices, 878
chlorine, presence in CFC and HCFC refrigerants, 1569
chlorofluorocarbons (CFCs), 172
CHP. *See* combined heat and power plant
circuit boards and microprocessors, 316–317
circuit breaker, 298, 378
circuit diagrams, 352
ladder diagram, 352
pictorial diagram, 352
circuit fundamentals, 278–282
circuit protection, 298–301
circuit breakers, 298
fuses, 298–300
ground fault circuit interrupter, 300–301
receptacle and plug configurations, 299
thermistor, 300
circuit symbols, 278–279
circulating pump, 1039
clamp-on ammeter, 394
Class 2 circuit, 296
Class A refrigerant, 177
Class B refrigerant, 177
Clean Air Act, 18, 170–171, 220, 225, 1566–1567, 1569
clean room, 798
cleaning solvent, 129
cleaning tools, 795
clearance space, 435
client, 1255
climate, 688
climate zones, 1264
climate zones and design temperatures, 990
closed circuit, 278
closed-loop control system, 382
closed-loop ground-source heat pump system, 1085
CO_2 test, 1152–1154
codes
electrical codes, 296
in commercial systems, 1401
International Building Code (IBC), 888
International Energy Conservation Code (IECC), 791–792, 1211
International Fuel Gas Code (IFGC), 1144, 1335–1338
International Mechanical Code (IMC), 768, 1404, 1408, 1410
International Residential Code (IRC), 768, 791
National Electrical Code (NEC), 296
NFPA 31, 1157–1158, 1176, 1178–1180
coefficient of performance (COP), 182, 1087, 1270
cogeneration, 913
coils and loops, 1095–1100
air coils, 1097
ground coils, 1097–1098
ground loops, 1099–1100
water coils, 1098
water loops, 1098–1099
cold, 60
cold chisels, 118
cold thermal energy storage (CTES), 1235
combination (slip-joint) pliers, 113
combination gas valve, 1122
combination thermostat, 949. *See also* heating-cooling thermostat
combined-flow, 539
combined gas law, 82
combined heat and power (CHP) plant, 913
combustion, 1117–1121
combustion efficiency, 1119–1121, 1152–1157
draft test, 1155–1156
fuel, 1118–1119
LP gas, 1119
natural gas, 1119
oxygen, 1117
smoke test, 1156–1157
stack temperature test, 1154–1155
combustion air, 1118
combustion blower, 1025
combustion head, 1162
comfort conditions, 702–705
Comfort-Health Index (CHI), 705
temperature-related illnesses, 703–705
comfort cooling controls, 841–843
comfort cooling system, 805
Comfort-Health Index (CHI), 705
commercial absorption systems and chillers, 907–914
ammonia systems, 907–909
lithium bromide systems, 909–912
commercial air-conditioning systems, 858–897
chillers, 872–884
cooling towers, 884–894
rooftop and outdoor units, 860–872
commercial refrigeration
effect of lack of refrigerant, 1424–1425
effect of noncondensables in system, 1425

Copyright Goodheart-Willcox Co., Inc.

excessive head pressure, 1425–1426
excessive suction line pressure drop, 1426–1427
moisture in refrigeration system, 1427–1430
troubleshooting, 1424–1430
commercial refrigeration component selection, 1378–1397
calculating theoretical compressor volume, 1386–1388
designing piping, 1388–1395
evaporators, 1380–1386
sizing compressors, condensers, and evaporators, 1380–1386
commercial refrigeration system configurations, 1332–1347
modulating refrigeration systems, 1334–1338
multiple-evaporator systems, 1334
multistage systems, 1338–1343
secondary loop refrigeration systems, 1343–1345
commercial refrigeration systems, 1278–1309
applications, 1280–1282
bakeries, 1280
cabinet construction, 1283
display cases, 1287–1289
florist cabinets, 1286
hot and cold merchandisers, 1287
ice banks, 1283–1284
ice machines, 1299–1306
industrial applications, 1306–1307
milk coolers, 1297–1299
other applications, 1282
quick chillers and blast chillers/freezers, 1289–1291
refrigerated dispensers, 1291–1297
servicing motors and compressors, 1502–1507
starting a system, 1418–1419
supermarkets, 1280–1282
temperature alarm systems, 1283
walk-in cabinets, 1284–1286
commercial refrigeration system, component diagnosis
checking electrical circuits, 1468–1469
condensing units, 1470–1484
electronic expansion valves (EEVs), 1486–1488
evaporator pressure regulators (EPRs), 1488–1489
evaporators, 1489–1491
external motors, 1469–1470
hot-gas valves, 1489
inspection overview, 1468
liquid lines, 1484–1485
solenoid valves, 1489
suction lines, 1491–1492
thermostatic expansion valves (TXVs), 1485–1486
commercial refrigeration, system diagnosis and troubleshooting, 1431–1453
low or no refrigeration/unit runs continuously, 1432–1441
low to normal refrigeration/longer than normal run time, 1442–1449
noisy units, 1453
no refrigeration/unit does not run, 1449–1451
normal to excessive refrigeration/motor running continuously, 1441–1442
short cycling, 1451–1453
commercial refrigeration system, installation, 1398–1419
refrigerant lines, 1407–1411
testing installations, 1414–1415
throttling suction service valve, 1419
types of commercial installations, 1400
using shutoff valves, 1419
valves, 1410, 1516–1519
commercial refrigeration system, service, 1496–1523
air-cooled condensers, 1507–1509
cooling towers, 1512–1513
evaporators, 1515–1516
liquid lines, 1513–1515
motors and compressors, 1502–1507
system service fundamentals, 1498–1502
valves, 1516–1519
water-cooled condensers, 1509–1512
common terminal, 344
commutator, 285
complete combustion, 1117
component selection
selecting compressor, 1380–1382
selecting condenser, 1382–1383
selecting evaporator, 1384–1386
liquid receiver sizing, 1386
compound gauge, 203
compound refrigeration systems, 1338–1341
definition, 1338
desuperheating, 1340
intermediate pressure, 1340
compression, 92–94
compressor, 93–94
gas laws, 80–83
oil separator, 94
relationship of pressure to volume and heat, 75
compression chiller economizer, 883
compression refrigeration cycle, 90–91
compression ring, 432
compression tank. *See* expansion tank
compressor, 93, 422–455, 1089–1090
centrifugal, 444–446
components and systems, 446–452
compressor drive configurations, 424–427
compressor protection devices, 458–462
cylinder unloading, 879
general compressor components and systems, 446–452
inefficient compressor, 1437
overload devices, 459
reciprocating, 428–438
rotary, 438–441
screw, 442–444
scroll, 441–442

Copyright Goodheart-Willcox Co., Inc.

selecting compressor, 1380–1382
types, 427–446
compressor capacity, 1381–1382
condensing temperature, 1382
operating cycle, 1381
suction line temperature, 1380
tables, 1382
compressor components and systems, 446–452
cooling systems, 447–448
crankcase heaters, 451–452
lubrication systems, 448
mufflers, 447
sealing devices, 450–451
service valves, 446–447
unloaders, 448–450
compressor discharge line sizing (chart), 1394
compressor drive configurations, 424–427
compressor drive configurations, hermetic compressors, 426–427
compressor faults, locating, 660–662
compressor loads, 1382
compressor motors, 342–345
hermetic compressor motors, 343–345
open-drive compressor motors, 342–343
compressor safety components, 456–469
crankcase heaters, 467
oil control systems, 462–466
operating conditions, 458
protection devices, 458–462
vibration absorbers, 466–467
concentrating collector, 1223
condensate pump, 524
condensation control, domestic refrigerators/freezers, 628
condensation infiltration, 1429
condenser, 95, 535–544
air-cooled, 535–536
air-cooled construction, 542–544
capacity, 1476
cleaning permits, 1508
commercial, 540–542
commercial refrigeration, 542
configurations, 539
definition, 95
evaporative, 537–540
operational considerations, 539–540
removing air-cooled condensers, 1508
repairing, 1508–1509
residential, 540
selecting a condenser, 1382–1383
servicing, 1507–1513
servicing air-cooled condensers, 1507–1509
servicing water-cooled condensers, 1509–1512
water-cooled, 536–537
condenser capacity, 1476
condenser condensate line, 1391
condenser efficiency, reduced, 1446–1448
condenser pressure regulator, 585–587
condenser splitting, 588
condensing, 94–97
liquid line, 97
liquid line filter-drier, 97
liquid receiver, 96
condensing furnace, 1022
condensing temperature, 1382
condensing units
acidic compressor oil, 1475
air-cooled condensers, 1476–1481
commercial refrigeration systems, 1470–1484
hermetic compressors, 1474–1476
installing commercial, 1401–1404
open-drive compressors, 1471–1474
water-cooled condensers, 1481–1484
conditioned space, 352
conduction, 66
conductor, 277
confined space, 38
connecting rod, 430
console air conditioners, 812–823
definition, 821
installing, 821
servicing, 821–823
contact point bounce, 942
contactor, 371
contacts, 317
continuity, 397
continuous-cycle absorption system, 902
continuous defrost timer, 623
continuous duty, 341
continuous load, 1204
contractual agreements, 51–52
control circuit, 312
control circuits and electronic devices, 312–316
diacs, 312–313
photoelectric devices, 316
rectifiers and inverters, 314–315
silicon-controlled rectifiers and triacs, 313–314
thermistors, 315–316
transistors, 314
controlled device, 384
controller, 383
controllers for building control systems, 1250–1253
centralized computer control, 1252–1253
localized controllers, 1252
remote controllers, 1252
control point, 382
control system, 352
control system fundamentals, 352–357
differential adjustment, 355–357
range adjustment, 353–355
convection, 66
conventional boiler, 1036

Copyright Goodheart-Willcox Co., Inc.

converting between Fahrenheit and Celsius degree-days, 1268
cooling and humidity control, principles, 806–808
cooling anticipator, 949
cooling coil, 99
cooling controls
domestic refrigerators/freezers, 619–620
thermostats, 619
cooling degree day, 695
cooling towers, 884–894
airflow designs, 889
capacity controls, 890
closed-loop cooling tower, 889
construction, 886–890
definition, 884
draft options, 889–890
electric water valves, 891
in seasonally cold climates, 890
motor water valve, 891
operational considerations, 890
pressure water valves, 892–893
servicing cooling towers, 1512–1513
solenoid water valve, 891
thermostatic water valves, 893–894
water circuits, 888
water valves, 890–894
COP. *See* coefficient of performance
core knowledge for certification exam testing, 1569
corrosion, 1038
coulomb, 273
counter electromotive force (cemf), 327
counterflow, 537
counterflow cooling tower, 889
counterflow furnace. *See* downflow furnace
CPVC (chlorinated polyvinyl chloride), 141
cracked open, 208
cracking open service valves, 111
crankcase, 436
crankcase heater, 452, 467
crankcase pressure regulator (CPR), 459–460, 575–577
crankshaft, 430
crawl space, 1002
critical pressure, 76
critical temperature, 76
critically charged, 1454
crossflow cooling tower, 889
cryogenic fluids, 185–188
cryogenic food freezing, 1307
crystalline solar cell, 1229
CSCR. *See* capacitor-start, capacitor-run motor
CSIR. *See* capacitor-start, induction-run motor
CTES. *See* cold thermal energy storage
cubic feet per minute (cfm), 750
cumulative run-time defrost system, 623
current, 272
current electricity, 275–277
alternating current, 277
definition, 275
direct current, 276
current-limiting fuse, 377
current relay, 368
customer relations, 47
customer service, 47–52
arrival on jobsite, 50
contractual agreements, 51–52
seasonal inspections, 51
service contracts, 51
service estimates, 51
technician appearance and conduct, 49
cut-in, 353
cut-out, 353
C-value. *See also* thermal conductance
C-values (thermal conductance), 1353
cylinder head, 435
cylinder unloading, 879

D

Dalton's law, 83
dampers, 766–768
controls, 766
fire dampers, 767–768
DC. *See* direct current
DC generator, 285
deaeration, 1039
deep vacuum, 255
defrost controls, heat pumps, 1102–1104
defrosting methods, 525–535
electric heat defrost, 533–534
hot-gas defrost system, 526–531
nonfreezing solution defrost, 531
off-cycle defrost, 534–535
pump-down defrost, 535
water defrost, 531–533
defrost systems
adaptive defrost, 625
demand defrost, 624–625
domestic refrigerators/freezers, 621–627
hot-gas defrost, 625–627
off-cycle defrost, 625
semiautomatic defrost, 627
timed defrost, 623–624
defrost timer, 521
degree days, 695
dehumidifiers, 934–936
definition, 934
equipment, 934–936
use of desiccants, 936
dehydration, 598
dehydration evacuation, 1569
demand defrost, 1104
demand defrost controller, 625

Copyright Goodheart-Willcox Co., Inc.

demineralized water, 933
density
definition, 57
specific gravity (relative density), 57
specific volume, 57
desiccant, 936
design testing procedures (chart), 1414
device pressure losses (DPL), 770
dew point, 174, 691
diac, 312–313
diagnostics and repair, building control system, 1256–1257
diagonal pliers, 113
dielectric, 275
dielectric strength, 190
differential, 355
differential adjustment, 355–357
definition, 355
using range and differential adjustments, 355–357
diffuser, 765
digital charging scale, 228
diode, 310
DIP (dual in-line package) switch, 961
direct-acting reversing valve, 1094
direct current (dc), 276
direct digital control (DDC), 380–385, 1250
control loops, 382
controlled devices, 384–385
controllers, 383–384
DDC system components, 382–385
definition, 380
sensors, 382–383
direct-drive compressor, 425
direct-exchange (DX) heat pump, 1085
direct-expansion evaporator, 874
direct-fired absorptions system, 907
direct radiant heat, 1201
direct return hydronic system, 1049
direct-spark ignition (DSI) system, 1125
direct-venting system, 1134
dirty sock syndrome, 1109
discharge line, 92–94
discharge line pressure switch, 460
discharge line thermostat, 460
discharge service valve (DSV), 209
dispensing freezer, 1295
display cases, 1287–1289
glass-enclosed, 1288
open display, 1288–1289
temperatures, 1288
dissolved air, 1046
distillation quality, 1151
distributed system, 1281
distributor, 490
domestic refrigeration, 598–599
causes of food storage, 598–599
preserving foods, 598–599
storage of fresh foods, 599
storage of frozen food in freezer, 599
domestic refrigerators/freezers
basic components, 612–620
compressors, 612–613
condensation control, 628
condensers, 614–616
cooling controls, 619–620
correct installation, 640–643
crispers and humidity-controlled drawers, 629
cycling times, 650
dampers, 620–621
defrost system failure, 648
defrost systems, 621–627
diagnosing symptoms, 643–650
electrical cord, 613
evaporators, 617–618
external service operations, 670–671
heat exchangers, 618–619
ice and water systems, 629–635
ice maker problems, 648
installation and troubleshooting, 638–667
internal service operations, 671–682
internal troubles, 654–665
metering devices, 616–617
no-start condition, 643
overload protection, 613
poor performance, 643–647
service and repair, 668–685
specialized systems, 620–635
storing/discarding refrigerator-freezer, 682–683
system failure, 650
systems and components, 610–637
troubleshooting chart, 644–647
unusual noises, 649
door liner replacement, 648
DOP HEPAP Method, 734
doping, 310
DOT. *See* United States Department of Transportation
double-cut file, 119
double-effect absorption system, 907
double flare, 148
downflow furnace, 1026
DPL. *See* device pressure losses
draft, 1155
draft gauge, 1155
draft regulator, 1144
draft test, 1155
drainback system, 1225
drift, 885
drift punch, 119
drill bit sizes, 117
drinking fountains. *See* water coolers
drip leg, 1136
dry-base boiler, 1037

Copyright Goodheart-Willcox Co., Inc.

dry-bulb temperature, 693
dry ice, 1320
dry ice refrigeration, 1320–1321
dry underfloor radiant heating system, 1052
DSI. *See* direct-spark ignition system
DSV. *See* discharge service valve
dual in-line package. *See* DIP switch
dual-pressure regulator, 491
dual-voltage motor, 336
duct, 753
duct blaster, 792
ductboard, 762
duct booster, 797
duct heater, 1197
duct problems and duct maintenance, 793–799
    balancing system, 797
    dirt on walls and drapes, 798
    drafts, 794
    fiberglass-lined ductwork, 795
    HVAC system cleaning, 794–797
    noise problems, 793–794
    preparation, 795
    removing odors, 798–799
    tools, 795–797
duct sizing, 768–775
    ACCA Manual D, 774–775
    design guidelines, 769
    determining duct size, 773–774
    procedure, 769–772
duct sweeper, 796
duct testing, 792–793
    maximum duct leakage, 793
    using a duct blaster, 792
ductless air-conditioning systems, 804–833
    console air conditioners, 821–823
    multizone ductless split systems, 825–831
    packaged terminal air conditioners, 819–821
    portable air conditioners, 823–825
    principles of cooling and humidity control, 806–808
    room air conditioners, 808–819
ductless split system, 825
dust, 720
DX. *See* direct-exchange
dye injection kits. *See* refrigerant dye leak detection

E

eccentric, 430
eccentric reducer fitting, 1063
ECM. *See* electronically commutated motor
eddy currents, 517
EER. *See* energy efficiency ratio
EEV. *See* electronic expansion valves (EEVs)
effective latent heat, 1370
effective length, 771
effective temperature, 702
EIA. *See* Environmental Impact Assessment
ejector, 631
elbow, 768
electrical circuits
    checking, 1468–1469
    definition, 278
electrical control systems, 350–389
    circuit diagrams, 352
    control system fundamentals, 352–357
    direct digital control (DDC), 380–385
    motor controls, 357–376
    motor protection devices, 376–380
electrical generators, 284–285
    AC generator, 284
    DC generator, 285
electrical hazards, 24–26
electrical load, 278
electrical materials, 277–278
    conductors, 277
    insulators, 278
    semiconductors, 278
electrical power, 290–307
    electrical problems, 302–304
    power circuits, 295–302
    power factor, 294–295
    power loss, 293–294
    root mean square values, 292–293
electrical problems, 302–304
    ground fault, 302–303
    open circuit, 304
    overload, 303
    short circuit, 302
    unintentional voltage drop, 303–304
electrical supply, checking, 642
electrical test equipment, 392–400
    ammeters, 394–395
    electrical insulation testers, 398–400
    multimeters, 396–397
    ohmmeters, 393–394
    power factor meters, 397
    voltmeters, 392–393
    wattmeters, 398
electric baseboard heating unit, 1199
electric baseboard heating unit controls, 1209–1210
electric evaporator pressure regulator (EEPR), 580
electric furnace, 1196
electric furnace and duct heater controls, 1204–1209
    airflow switches, 1204–1205
    electromagnetic contactors, 1208
    mercury contactors, 1208
    safety controls, 1208–1209
    sequencers, 1205–1208
electric heat defrost, 533
electric heating
    definition, 1194

Copyright Goodheart-Willcox Co., Inc.

elements, 1194–1195
open ribbon, 1195
open wire, 1194
shock, 1195
tubular case wire, 1195
electric heating systems, 1192–1217
allowable ampacity, 1201
baseboard heating unit controls, 1209–1210
baseboard heating units, 1199–1201
construction practices, 1210–1212
deicing and snow melting, 1203–1204
duct heaters, 1197–1198
electric furnace and duct heater controls, 1204–1209
electric furnaces, 1196–1197
electric radiant heat, 1201–1203
fan heaters, 1198–1199
heating elements, 1194–1195
maintenance and troubleshooting, 1213–1214
orientation, 1197
principles of electric resistance heating, 1194
system service, 1212–1214
electric interlock, 1127
electric motors, 324–349
AC induction motors, 330–338
capacitor overload, 401
commercial systems, 1411–1414
determining motor troubles, 400–403
electronically commutated motors (ECMs), 338–339
elementary electric motor, 326–330
hermetic compressors, 1412–1414
installing open-drive compressor motors, 1412
motor applications in HVACR systems, 342–346
motor capacitors, 401
motor temperature, 403
single phasing of three-phase motors, 403–404
standard motor data, 339–342
three-phase motors, 336–337
troubleshooting, 400–404
electric radiant heat, 1201
electric resistance defrost problems, 664
electric resistance heating, 1194
electricity, 270–289
circuit fundamentals, 278–282
electrical generators, 284–285
electrical materials, 277–278
fundamental principles, 272–275
magnetism, 282–284
transformer basics, 285–286
types, 275–277
electrode gap, 1165
electrodeposition, 1222
electromagnet, 283
electromagnetic interference (EMI), 1126
electromagnetism, 283
electromotive force (emf), 272
electromotive force and current, 272–273
electron, 272
electronic air cleaners, 732, 734–736, 800–801
electronically commutated motor (ECM), 338
electronic devices
diacs, 312–313
photoelectric devices, 316
rectifiers and inverters, 314–315
silicon-controlled rectifiers and triacs, 313–314
thermistors, 315–316
transistors, 314
electronic expansion valves (EEVs), 496–501, 1486–1488
definition, 496
pulse width-modulating solenoid EEVs, 500–501
stepper motor EEVs, 497–500
electronic leak detection, 222
electronic relay. *See* solid-state relay (SSR)
electronics
basic, 308–323
circuit boards and microprocessors, 316–317
control circuits and electronic devices, 312–316
relays, 318
semiconductor basics, 310–312
switches and contacts, 317–318
thermocouples, 320
electrostatic filters, 800
embrittlement, 1039
emf. *See* electromotive force
EMI. *See* electromagnetic interference
emissivity, 1005
employer-provided tools and equipment, 130–131
end bell, 326
endplay, 412
end switch, 1131
energy, 56
energy and matter, 54–71
density, 57
force, work, and power, 57–59
heat, 59–68
mass and weight, 56–57
matter and energy, 56
measuring refrigeration effect, 68–69
systems of measurement, 56
energy auditor, 8
energy audits, 1246–1248
commercial and industrial, 1247–1248
definition, 1246
residential energy audits, 1247
energy conservation, 1260–1277
building efficiency, 1262–1268
definition, 1261
HVAC alternatives, 1270–1274
HVAC equipment efficiency, 1268–1270
role of HVACR technician, 1274
energy consumption, 1246
energy efficiency guidelines (chart), 1088
energy efficiency ratio (EER), 1268

Copyright Goodheart-Willcox Co., Inc.

Energy Independence and Security Act of 2007, 1357
energy management, 1244–1259
building control protocols, 1253–1256
building control system diagnostics and repair, 1256–1257
building control systems, 1248–1250
controllers for building control systems, 1250–1253
energy audits, 1246–1248
energy consumption, 1246
energy recovery ventilator (ERV), 740
energy-saving components, 1271–1272
building control systems, 1271
evaporative cooling designs, 1273–1274
heat exchangers, 1271
methods of subcooling, 1271–1272
programmable thermostats, 1271
solar products, 1271
total energy systems, 1273
variable speed motors and variable frequency drives, 1271
Energy Star, 1267
Energy Star label, 1088
energy use intensity (EUI), 1250
enthalpy
calculating (formula), 64
definition, 64, 699
enthalpy control, 865
entrained air, 1046
environmental illness. *See* multiple chemical sensitivity (MCS)
Environmental Impact Assessment (EIA), 1099
Environmental Protection Agency (EPA), 170, 1566
enzymes, 599
EPA. *See* Environmental Protection Agency
EPA certification, 1566–1572
areas for research for exams, 1569–1571
core knowledge for exams, 1569
Type I: small appliances, 1567, 1569–1570
Type II: high- or very high-pressure appliances, 1567–1568, 1570
Type III: low-pressure appliances, 1568, 1570–1571
Type IV: universal certification, 1568
EPA leak repair standard, 220
EPA regulations, and Clean Air Act, 170–171
EPA service requirements, 1571–1572
leak repairs, 1572
recovery procedures, 1571
EPA vacuum levels, 1572
epoxy repair kit, 675
epoxy resin, 252
EPR. *See* evaporator pressure regulator
equalizer, 483
equivalent temperature, 688
ERV. *See* energy recovery ventilator
ESP. *See* external static pressure
estimator, 8
EUI. *See* energy use intensity
eutectic plates, 1315–1316
definition, 1315
terminology, 1315
eutectic salt, 1239
evacuated tube collector, 1223
evacuations, 253–257
deep vacuum, 255
tips, 254–255
triple evacuation, 256
evaporating, 98–101
accumulator, 99–100
evaporator, 98–99
suction line, 100
suction line filter-drier, 100
evaporative condenser, 537–540
evaporative cooling, 917–920
definition, 917
indoor applications, 917
wet roof cooling, 917–920
evaporative humidifier, 929
evaporator, 98, 512–535, 1515–1516
air-conditioning, 519–520, 844–845
air-cooling, 512–513
checking, 1489–1491
commercial refrigeration, 520–521
condensate drainage, 845
defrost controls, 521–525
defrosting methods, 525–535
domestic refrigerator, 518–519
efficiency reduced, 1448–1449
evaporator condensate tubing, 1406
evaporator mounting, 1405–1406
factors affecting evaporator capacity, 1384–1385
fin-and-tube, 515–517
flaked ice evaporators, 1303–1306
forced-draft evaporator capacities, 1385
grounding, 1406
ice machines, 1300–1306
icing, 852
inspecting, 848–850
installing, 843–848, 1516
installing evaporator pressure regulators, 1406–1407
installing in commercial systems, 1405–1407
inverted cube evaporators, 1302–1303
leak testing, 1491
liquid-cooling, 514
liquid-cooling evaporator capacities, 1385–1386
low-temperature applications, 513
microchannel, 517–518
natural-draft and forced-draft, 513
plate, 517
removing, 1515
repairing, 1515–1516
selecting, 1384–1386

Copyright Goodheart-Willcox Co., Inc.

temperature applications, 513
vertical cube evaporators, 1300–1302
evaporator pressure regulator (EPR), 577–581, 1488–1489
definition, 577
electric evaporator pressure regulators, 580–581
installing evaporator pressure regulators, 1406–1407
metering evaporator pressure regulator, 579–580
snap-action evaporator pressure regulator, 580
troubleshooting EPRs in commercial refrigeration systems, 1488–1489
exam preparation, 1568
excelsior, 917
excess air, 1119
exfiltration, 739
exosphere, 689
expansion steam trap, 1064
expansion tank, 1039
expansion valves
adjusting automatic expansion valves, 1517–1518
installing, 1404–1405
removing, 1516
repairing clogged expansion valve screens, 1516–1517
servicing electronic expansion valves, 1516–1518
expendable refrigerant, 188
expendable refrigeration systems, 188, 1319–1320
external circuits, checking, 650–654
external-drive compressor. *See* open-drive compressor
external motors
cleanliness, 1503
motor bearings, 411–412
motor lubrication, 409–411, 1503
pulleys and belts, 412–414
removing, 1503–1504
servicing, 409–414, 1503–1504
external service operations
cleaning condenser and compressor, 670
pressurized air for cleaning, 670
external static pressure (ESP), 770

F

Fahrenheit scale, 60
converting between Fahrenheit and Celsius degree-days, 1268
temperature conversion formula, 60
temperature conversion table, 1562–1565
failing into heating mode, 1094
fan, 775–781
fan convector, 1045
fan heater, 1198
fan motors
connection problems, 407
ECM troubleshooting and service, 408
problems, 408
servicing, 407–408
farad (F), 275
fast-acting fuse, 377
fasteners, 127–128
feedback, 382
field-erected air-conditioning system, 837
field pole, 326
field winding, 326
files, 119–120
fill, 887
filter-driers
definition, 97, 676, 1411
installing in commercial systems, 1411
location, 482
servicing, 676
filter service, 799–801
disposable filters, 799–800
electronic air cleaners, 800–801
electrostatic filters, 800
fin-and-tube evaporator, 515
fin comb, 1509
fire extinguisher (chart), 27
fire hazards, 26–28
first aid procedures, 39
fixed and modulating metering devices, 472
fixed filter humidifier, 930
FLA. *See* full-load amperage
flame failure response time (FFRT), 1175
flame rectification, 1125
flame retention oil burner, 1164
flame rod, 1125
flame rollout, 1130
flammability, 177
flammability limit, 1117
flare, 146
flared connections
and fittings, 146
double flares, 148
flare fittings, 159
single flares, 147–148
flare nut wrench, 110
flashback arrestor, 153
flash gas, 97, 479
flash point, 190
flat-plate collectors, 1221–1223
absorber surface roughness, 1222
black surfaces, 1221
definition, 1221
flat-plate collector covers, 1222–1223
insulation, 1222
selective surfaces, 1221
tubing and piping, 1222
float-operated refrigerant controls, 501–506
high-side float (HSF), 504–506
low-side float (LSF), 502–504
floc point, 189
flooded system, 502

Copyright Goodheart-Willcox Co., Inc.

flow check piston, 1092
flow-control valve, 1044
flow hood, 789
flow switch, 1060
flue, 1022
flue draft test, 1155
fluorescent dye leak detection, 221
flux, 155
foot-pound (ft-lb), 58
force (F), 57–59
    calculating, 59
    definition, 57
force, work, and power, 57–59
    force, 57–58
    power, 58–59
    relationship, 59
    work, 58
forced-air condensers, 95, 614–616
forced-air duct arrangements, 1027
forced-air heating fundamentals, 1020–1033
    basic components, 1022–1025
    blower controls, 1029–1031
    forced-air duct arrangements, 1027
    furnace types and construction, 1025–1027
    makeup air units, 1027–1029
    unit heaters, 1031
forced-air heating system, 1022
forced draft, 775
forced-draft cooling tower, 890
forced-draft evaporator, 98, 513
    capacities, 1385
    in domestic appliances, 618
forward bias, 311
fractional efficiency test, 734
fractionation, 174
free air, 1046
free air displacement, 223
free cooling, 962
freezant, 185
freezer, 599–601
    defrost timer, 601
    frost-free, 601
    manual defrost, 600
freezer burn, 599
freezestat, 972
friction loss, 772
friction rate, 772
front gap, 1165
front seated, 207
frost and humidity, 513
frost back, 494
fuel gas flammability limits (chart), 1117
fuel line components, 1157–1161
    booster pumps, 1161
    filters, 1160–1161
    oil deaerators, 1158–1160
    vacuum safety valves, 1161
fuel line filter, 1160
fuel oil, 1151–1152
fuel oil additives, 1186
fuel unit, 1168
full-load amperage (FLA), 340
fully halogenated, 172
fumes, 720
furnace types and construction, 1025–1027
    downflow furnace, 1026
    highboy furnace, 1025
    horizontal furnace, 1026–1027
    lowboy furnace, 1025
    modulating furnace, 1027
    multipoise furnace, 1025
    noncondensing furnaces, 1023
    two-stage furnace, 1027
    upflow furnace, 1026
fuse, 298, 376
fusible link, 1208
fusible plug, 198, 582

G

gable fan, 752
galvanic action, 1407
gas, 66
gas burners, 1122–1124
    atmospheric gas burners, 1123
    definition, 1122
    power burners, 1124
gases, 66, 72–87
    basic processes that provide cooling effect, 84
    definition, 66
    gas laws, 80–83
    pressure, 74–80
    saturated vapor, 84
    volume, 74
gas-fired heating systems, 1144–1147
    combustion, 1117–1121
    efficiency, 1131–1134
    gas burners, 1122–1124
    gas furnace controls, 1127–1131
    gas furnace operation overview, 1116–1117
    gas valves, 1121–1122
    heating system service, 1134–1144
    ignition systems, 1124–1127
    radiant heat, 1134
    venting categories, 1134
gas furnace
    combustion blow controls, 1130–1131
    controls, 1127–1131
    efficiency, 1131–1134
    flame troubleshooting, 1140–1142
    functions, 1128–1129
    high-efficiency gas furnaces, 1133–1134

Copyright Goodheart-Willcox Co., Inc.

ignition control modules, 1128–1130
installation, 1135
maintenance, 1138–1139
mid-efficiency gas furnaces, 1132–1133
operation overview, 1116–1117
safety controls, 1130
troubleshooting, 1139–1142
types, 1128
wiring, 1129–1130
gasket, 128
gas laws, 80–83
Avogadro's law and ideal gas law, 83
Boyle's law, 81
Charles' law, 81
combined gas law, 82–83
Dalton's law, 83
Gay-Lussac's law, 81–82
Pascal's law, 75
gas leak testing, 1137
gas manifold, 1122
gas piping, 142–143
capacity (chart), 1136
codes, 1135–1138
identification, 1138
material, 1136
testing, 1137
gas valves, 1121–1122
gateway, 1254
gauge manifolds, 214–217
connecting, 216–217
construction, 214–215
definition, 214
operation, 216
purging gauges and hoses, 215–216
refrigeration system analyzers, 217
Gay-Lussac's law, 81, 1349
geothermal heat pump, 1085
GFCI. *See* ground-fault circuit interrupter
GFCI receptacles, 301
global warming potential (GWP), 171
Globally Harmonized System (GHS), 32
glow coil, 1126
gravitational circulation, 513
gravitational force (SI), (formula), 57
gravity flow basin, 887
gravity heating system, 1022
GreenChill certification, 1345
grille, 765
ground, 301
ground coil, 1097
grounded conductor, 301
ground fault, 302
ground-fault circuit interrupter (GFCI), 26, 300
grounding, 301
ground loop, 1099
ground-source heat pump (GSHP), 1084
GSHP. *See* ground-source heat pump
gun burner, 1161

H

hacksaws, 120–121
halide torch leak detection, 222
hammers and mallets, 112–113
hand and power tools, 39
hand tools, 106–121
cold chisels, 118
files, 119–120
hacksaws, 120–121
hammers and mallets, 112–113
levels, 121
pliers, 113–114
punches, 118–119
screwdrivers, 114–116
twist drill bits, 116–118
vises, 116
wrenches, 106–112
hard lockout, 1129
hard start kit, 407
hazard, 24
hazard assessment, 24–33
breathing hazards, 33
chemical hazards, 31–33
electrical hazards, 24–26
fire hazards, 26–28
pressure hazards, 29–30
refrigerants as hazards, 30–31
temperature hazards, 28
Hazard Communication Standard (HCS), 32
hazard pictogram, 32
hazard statement, 32
HAZMAT, 944
HCFC refrigerants. *See* hydrochlorofluorocarbons (HCFCs)
HC refrigerants. *See* hydrocarbons (HCs)
head pressure, 92
alternative terms, 92
diagnosing problems using head pressure, 1431–1452
effect of noncondensables, 1425
excessive, 1425–1426
high head pressure, 672
in ice machines, 1456–1458
head pressure control
condenser air louvers, 546
condenser splitting, 588–592
definition, 544
electric heat, 547
fan speed control and cycling, 547
heat exchangers, 544–547
pressure-regulating valves, 585–588
head pressure control valves, 584–592

Copyright Goodheart-Willcox Co., Inc.

condenser pressure regulator, 585–587
condenser splitting, 588–592
low-ambient control (LAC), 587
pressure-regulating valves, 585–588
receiver pressure regulator, 585–587
head pressure valve names, 587
health studies. *See* humidity
heat, 50–68
absolute temperature scales, 60–61
ambient temperature, 62
calculating heat energy, 62–65
definition, 59
methods of heat transfer, 65–66
states of matter, 66–68
supplementary, 1227–1228
temperature and heat relationship, 60–62
temperature scales, 60
heat anticipator, 948
heat capacity values (chart), 62
heat emitters. *See* terminal unit
heat energy
calculating, 62–65
change, 62–64
enthalpy, 64
heat units, 62
specific enthalpy, 65
specific heat capacity, 62
heat equivalent of occupancy (table), 1367
heat exchanger, 473, 510–557, 1022
commercial refrigeration liquid line subcoolers, 549
condensers, 535–544
domestic refrigerators/freezers, 618–619
evaporators, 512–535
head pressure control, 544–547
heat exchanger service, 1138
heat recovery systems, 551–553
other heat exchangers, 547–554
plate heat exchangers, 549–551
suction line-liquid line, 547–549
heat gain, 984
heat gain factors (chart), 1356
heat gain HTM, 992
heat insulation, 715
heat insulator, definition, 66
heat lag, 1006
heat leakage (thermal conduction)
calculating, 985–1000
definition, 985
design temperatures, 990–991
heat transfer multipliers (HTMs), 991–992
heat transfer rate, 997
net wall area, 995–996
SI units for area, 992
surface areas, 992–996
thermal conductivity/thermal conductance, 986
thermal resistance, 986–987
thermal transmittance, 987–990
unit conversions, 998–1000
US customary units for area, 992
vaulted ceilings, 993
heat leakage load, 1350–1357
adjusting for heat from the sun, 1357
calculating area, 1354
calculating heat leakage load, 1355–1357
K-values (thermal conductivity)/C-values (thermal conductance), 1352
K-values, C-values, R-values, U-values, 1350–1352
R-values (thermal resistance), 1352–1353
U-values (thermal transmittance), 1353–1354
heat loads, 984–985
air change tables, 1003
basement heat loss, 1000–1001
calculating total heat load, 1367–1368
combining various heat loads, 1368
crawl space heat loss, 1002
definition, 1350
factors affecting, 1000–1007
for cooling, 985
for heating, 984–985
heat leakage (thermal conduction) load, 1350–1357
heat sources in buildings, 1006–1007
infiltration and exfiltration, 1002–1004
low-emissivity windows, 1006
service heat load, 1357–1367
slab-on-grade heat loss, 1001–1002
sun loads, 1004–1006
various refrigerated products (table), 1364–1365
water coolers, 1368–1370
heat loads and system thermodynamics, 1348–1377
heat loads, 1350–1370
thermodynamics of basic refrigerating cycle, 1370–1375
heat loss, 984
heat loss and exfiltration, 1211
heat loss HTM, 992
heat of compression, 75
heat pumps, 1080–1113
air-source, 1083–1084
basics, 1082–1083
controls, 1100–1105
definition, 1081
defrost system, 1104
efficiency, 1086–1088
electric heat defrost, 1104
geothermal, 1085
ground-source, 1084–1086
installation, 1106–1107
maintenance, 1107
solar heating systems, 1105–1106
system components, 1088–1100
system service, 1106–1110
troubleshooting, 1108–1110

Copyright Goodheart-Willcox Co., Inc.

types, 1083–1086
heat recovery system, 551
heat recovery ventilator (HRV), 739
heat sink, 714
heat sources and refrigerant tubing, 1408
heat transfer, 984
conduction, 66
convection, 66
radiation, 65
heat transfer multiplier (HTM), 992
heat transfer rate, 997–998
C-values or K-values to calculate, 998
definition, 997
heat transfer rates (table), 1383
R-values to calculate, 997
using U-values to calculate, 997
heating and cooling costs, 1087
heating and cooling loads, 982–1019
calculating heat leakage, 985–1000
factors affecting heat loads, 1000–1007
heat transfer, 984
Manual J method, 1007–1014
software and apps for load calculations, 1014–1016
heating and cooling modes, 361
heating-cooling thermostat, 946
heating degree day, 695
heating elements, installing, 1212
heating seasonal performance factor (HSPF), 1087, 1270
HEPA filters, 733
hermetic compressor, 426–427
burnout, 672
charging systems with, 1418
construction, 426
definition, 426
fully hermetic compressors, 426–427
installing, 673–674
replacing, 671–673
semi-hermetic, 427
service chart, 1477–1478
hermetic compressor motors
conditions and maintenance, 399
electrical testing, 404–406
servicing, 404–407
hermetic motor burnouts, servicing, 1504–1505
hermetic system
adding oil to system, 679–680
digital scale, 678
evacuating and charging, 677–680
observing frost back, 678–679
Herschel, John, 1327
hex key wrench, 110
HFC refrigerants. *See* hydrofluorocarbons (HFCs)
HFO refrigerants. *See* hydrofluoro-olefins (HFOs)
HFO-1234yf, 174–175
HFO-1234ze, 174–175
highboy furnace, 1025
high-efficiency gas furnace, 1133
high-limit control, 1058
high-limit switch, 1130
high-pressure chiller, 876
high-pressure gauge, 204
high-pressure motor control, 363
high side, 91
high-side charging, 1416
high-side float (HSF), 504–506
definition, 504
operation, 505
high-side pressure, 92
high-side restriction, 1439–1440
high-stage compressor, 1340
hole flow, 310
horizontal furnace, 1026
horsepower (hp), 58
hot and cold merchandiser, 1287
hot-gas bypass capacity control, 1338
hot-gas bypass valve, 572
hot-gas defrost problems, 664–665
hot-gas defrost, 526
hot-gas defrost system, 526–531
low-pressure adjusting, 526–527
reverse cycle, 527
reverse cycle for multiple evaporators, 527–531
hot-gas defrost valve, 572
hot-gas valves
checking, 1489
replacing, 1519
hot pull down, 460
hot-surface igniter, 1126
hot-surface ignition (HSI) system, 1126
hot-wall condensers, 614
hot water reclaim tank, 551
hot-wire anemometer, 707
HRV. *See* heat recovery ventilator
HTM. *See* heat transfer multiplier
humidifiers
atomizing humidifiers, 931
central humidifier designs, 928–933
central humidifier water supply, 932–933
definition, 927
evaporative humidifiers, 929
fixed filter humidifiers, 930
impeller humidifiers, 931
nozzle-type humidifiers, 931
piezoelectric (ultrasonic) humidifiers, 931
plate humidifiers, 929
portable, 933–934
rotating disk humidifiers, 931
rotating drum humidifiers, 930–931
servicing and installing, 936
types, 928–934
vaporizing (steam) humidifiers, 932
humidistat, 927

Copyright Goodheart-Willcox Co., Inc.

humidity, 690–693
definition, 690
desiccants, 693
dew point, 691–692
florist cabinets, 1286
humidity controls, 693
indicators of low humidity, 691
measurement, 692–693
relative humidity, 690–691
humidity and ventilation, 1212
humidity control, 924–939
dehumidifying equipment, 934–936
humidity levels and comfort, 926–928
servicing and installing humidifiers, 936
types of humidifiers, 928–934
humidity levels and comfort, 926–928
humidifier basics, 927
humidistats, 927–928
hunting, 481
HVAC alternatives for energy conservation, 1270–1274
energy-saving components, 1271–1272
HVAC equipment efficiency, 1268–1270
air conditioners, 1268–1270
furnaces and boilers, 1268
heat pumps, 1270
HVAC Excellence, 18
HVAC system cleaning, 794–797
HVACR careers, 6–10
building inspector, 9
drafter, designer, engineer, 7–8
employment outlook, 10–11
energy auditor, 8–9
equipment manufacturer occupations, 10
estimator, 8
instructor, 9–10
technician, 6–7, 1274
HVACR designer, 8
HVACR drafter, 8
HVACR engineer, 7
HVACR-related associations and organizations, 16
HVACR system pressures, 92
HVACR technician
installation and maintenance, 1274
know and explain the options, 1274
the role, 1274
hybrid solar energy system, 1224
hydrocarbons (HCs), 175
hydrochlorofluorocarbons (HCFCs), 172
hydrofluorocarbons (HFCs), 172
hydrofluoro-olefins (HFOs), 174
hydrogen, 689
hydronic heating fundamentals, 1034–1079
boiler inspection and maintenance, 1074–1075
hydronic system components, 1036–1047
hydronic system controls, 1059–1063
hydronic system designs, 1047–1059
hydronic system installation, 1063–1065
troubleshooting and servicing, 1065–1074
hydronic system components, 1036–1047
air-removal components, 1046–1047
boilers, 1036–1039
circulating pumps, 1039
expansion tanks, 1039–1040
terminal units, 1044–1046
valves, 1040–1044
hydronic system controls, 1059–1063
aquastat, 1060
flow switch, 1060
hydronic system operating sequences, 1063
indoor reset control, 1062
low-water cutoff, 1059
outdoor reset control, 1062
zone controls, 1060–1062
hydronic system designs, 1047–1059
combined heating and cooling systems, 1054
gas-fired boilers, 1058–1059
oil-fired boilers, 1056–1058
one-pipe systems, 1048–1049
radiant hydronic systems, 1051–1054
series loop systems, 1048
steam heating systems, 1054–1056
two-pipe systems, 1049
zoned systems, 1049–1051
hydronic system installation, 1063–1065
balancing, 1064
initial start-up, 1063–1064
steam heating system installation, 1064–1065
hydronic systems, bleeding, 1066
boiler problems, 1065
definition, 1035
expansion tank problems, 1072–1073
other problems, 1073
purging, 1066–1072
series loop system, 1067
servicing steam heating system, 1073–1074
troubleshooting and servicing, 1065–1074
water circulation problems, 1065–1066
hygrometer, 692
hygroscopic element, 927

I

IAQ. *See* indoor air quality
IBC. *See* International Building Code
ice and water systems
automatic ice makers, 629–633
domestic refrigerators/freezers, 629–634
water and ice dispensers, 633–635
ice bank, 1283
ice machines, 1299–1306
capacity check, 1458–1459
controls, 1300

Copyright Goodheart-Willcox Co., Inc.

cube ice machine service, 1459–1460
definition, 1299
drain problems, 1455–1456
evaporators, 1300–1306
flake ice machine service, 1460–1462
gauges, 1454
head pressure in ice machines, 1456–1458
troubleshooting, 1454–1462
water quality, 1454–1455
ice maker
installing, 640–641
problems, 649
ice, removal from domestic freezer, 648
ice thickness sensor, 1459
IDT. *See* indoor design temperature
IECC. *See* International Energy Conservation Code
IFGC. *See* International Fuel Gas Code
ignition carryover, 1175
ignition devices, testing, 1186–1187
ignition point, 1151
ignition system troubleshooting, gas furnace, 1140
ignition systems, 1124–1127
definition, 1124
direct-spark ignition (DSI) system, 1125–1126
hot-surface ignition (HIS) system, 1126–1127
intermittent-pilot ignition system, 1125
standing-pilot ignition system, 1124–1125
ignition temperature, 1117
ignition transformer, 1174
IMC. *See* International Mechanical Code
immersed evaporator, 514
impedance, 385
impeller, 444, 1039
impeller humidifier, 931
inches of mercury, 78
incomplete combustion, 1118
indirect-fired absorption system, 907
indirect radiant heat, 1202
indoor air conditions
factors affecting, 714–715
heat insulation, 715
heat sinks, 714
sun heat loads, 714
vapor barriers, 714–715
indoor air quality (IAQ), 719, 724–730
building-related illness (BRI), 730
classifications of issues, 729–730
commercial assessment, 728
commercial setting, 727–728
control of indoor pollutants, 728–729
educating occupants and staff, 728
high-risk individuals, 724–725
home and residential inspection, 725
indications of problems, 724
maintain acceptable indoor environment conditions, 729
multiple chemical sensitivity (MCS), 730
preventing problems, 728–729
residential, 724
residential assessment, 725–727
sick building syndrome (SBS), 730
systems, 739–740
ventilation and filtration, 729
indoor blower, 1024
indoor coil, 1082
indoor design temperature (IDT), 990
indoor reset control, 1062
induced draft, 775
induced-draft cooling tower, 890
induced magnetism, 283
inductance, 293
induction, 285
induction motor, 330
inductive reactance, 294
industrial applications, 1306–1307
explosion-proof systems, 1306
freezing of foods, 1306–1307
industrial processes, 1306
inefficient compressor, 1437
infiltration, 739, 1361
infiltration and exfiltration, 1002–1004
initialization, 500
in-line ammeter, 395
inorganic refrigerants, 185–189
cryogenic fluids, 186–188
expendable refrigerants, 188–189
R-717 ammonia, 185
inshot burner, 1123
inspection check lists for technicians, 1468
inspection mirror, 643
inspection tool, 795
installation, 6
instruments, 122–126
linear measuring tools, 126
manometers, 124–126
multimeters, 126
thermometers, 122–124
insulator, 278
integrated ignition control module, 1128
intercooler, 1340
intermittent absorption systems, 902
intermittent defrost timer, 623
intermittent duty, 341
intermittent ignition, 1173
intermittent-pilot ignition system, 1125
intermodal shipping container refrigeration, 1316
internal service operations, 671–682
hermetic compressor burnout, 672
installing hermetic compressor, 673–674
repairing condenser leaks, 674
repairing evaporators, 674–675
replacing hermetic compressor, 671–673

Copyright Goodheart-Willcox Co., Inc.

servicing capillary tubes, 676
internal troubles, diagnosing, 654–665
International Building Code (IBC), 888
International Energy Conservation Code (IECC), 791–792, 1211
International Fuel Gas Code (IFGC), 1144, 1335–1338
International Mechanical Code (IMC), 768, 1404, 1408, 1410
International Residential Code (IRC), 768, 791
inter-purge, 1129
interrupted ignition, 1173
inverter, 314
inverter-driven compressors, 853–855
ionizing air purifiers, 736–737
IRC. *See* International Residential Code

J

jet cooling systems, 1325–1327
steam jet systems, 1325–1326
refrigerant jet systems, 1326–1327
joule (J), 58
jumpered, 1500

K

keel cooler, 1318
Kelvin scale, 60
kickspace fan convector, 1046
kinetic energy, 56
king valve, 210. *See also* liquid receiver service valve (LRSV)
K-value, 1353. *See also* thermal conductivity

L

ladder diagram, 352
latent heat, 67, 95
definition, 67
latent heat of condensation, 67
latent heat of freezing, 67
latent heat of fusion, 67
latent heat of melting, 67
latent heat of vaporization, 67, 1370
law of conservation of energy, 56
Leadership in Energy and Environmental Design (LEED), 1006
leak detection devices, 217–223
bubble solutions, 220–221
electronic leak detectors, 222–223
halide torch leak detectors, 221–222
nitrogen use, 1570
refrigerant dye and fluorescent dye, 221
leak repairs, 1572
lean, 1118
learning thermostat, 942
LEED. *See* Leadership in Energy and Environmental Design
Legionnaires' disease (Legionella), 730, 1482
level (orientation), 121
level (tool), 121
licensing, 19
lifelong learning, 16
linear measuring tools, 126
lineman's pliers, 113
line voltage, 952
line-voltage thermostat, 952
liquid-cooling evaporator, 514
liquid-cooling evaporator capacities, 1385–1386
liquid, definition, 66
liquid drying agents, 676
liquid injection valve, 574
liquid line, 97, 1484–1485
piping, 1391–1392
refrigerant line support, 1514
servicing, 1513–1515
sizing chart, 1392
tubing sizes, 1514
liquid line filter-driers, 562–563
liquid line manifold, 566
liquid line service valve, 209
liquid nitrogen safety, refrigeration methods, 1320
liquid receiver, 96, 561–562
liquid receiver isolation, 1417
repairing, 1510
sizing, 1386
liquid receiver service valve (LRSV), 209
liquid recovery method, 242–244
liquid slugging, 458, 479
listing, 649
lithium bromide, 915
lithium bromide absorption chillers, 909
LO. *See* lockout
local sensing, 1126
localized controller, 1252
locked rotor amperage (LRA), 341
locked rotor code letters, 341
locker plant, 1306
lockout (LO), 24
lockout relay, 384
lockout/tagout (LOTO), 25
LonTalk, 1256
LOTO. *See* lockout/tagout
low-ambient control (LAC), 587
lowboy furnace, 1025
low or no refrigeration/unit runs continuously, 1432–1441
high-side restriction, 1439–1440
inefficient compressor, 1437
low-side restriction, 1440–1441
overcharged system with capillary tube, 1437–1438
overcharged system with TXV, 1438–1439

Copyright Goodheart-Willcox Co., Inc.

restriction in capillary tube, 1433–1434
restriction in TXV, 1434–1437
undercharged system with capillary tube, 1432
undercharged system with TXV, 1433
low-pressure chiller, 876
low-pressure motor control, 365
low-pressure safety control, 367
low side, 91
low-side charging, 1415
low-side float (LSF), 502–504
construction, 503–504
definition, 502
operation, 502–503
low-side pressure, 92
low-side restriction, 1440–1441
low-stage compressor, 1340
low-voltage thermostat, 952
low-water cutoff (LWCO), 1059
LP gas, 1119, 1125
LRA. *See* locked rotor amperage
LRSV. *See* liquid receiver service valve
lubrication systems, compressors, 448

M

machine screw, 127
magnetic field, 282
magnetic flux, 282
magnetism, 282–284
electromagnetism, 283–284
permanent and induced, 282–283
maintenance, 44
maintenance service contract, 51
makeup air units, 1027–1029
makeup water, 885
mallet, 113
manifold valve, 566
manometer, 124
Manual D, 774
Manual J method
air leakage, 1014
definition, 1007
ducts, appliances, and miscellaneous loads, 1013
field measurements, 1012–1013
glass loads, 1010–1011
heating and cooling load, 1007–1014
local conditions, 1008–1010
total load, 1014
wall, floor, door, and ceiling loads, 1011–1012
marine refrigeration, 1316–1319
mass, 56
master-slave thermostat design, 969
master thermostat, 969
matter, 56
maximum operating pressure. *See* MOP thermostatic expansion valve
MCS. *See* multiple chemical sensitivity
mechanical pressure limiters, 491
medium hard water, 933
megohmmeter, 398
mercury contactor, 1208
mercury switch, 942
mercury toxicity, 123
MERV (Minimum Efficiency Reporting Value), 728
MERV ratings (chart), 731
mesosphere, 689
metering devices, 97, 470–509, 1090–1093
automatic expansion valves (AXVs), 493–496
basics, 472
capillary tubes, 472–476
definition, 97
electronic expansion valves (EEVs), 496–501
fixed and modulating, 472
fixed-orifice metering devices and capillary tubes, 1090–1091
float-operated refrigerant controls, 501–506
flow check pistons, 1092–1093
metering orifices, 476
thermostatic expansion valves (TXVs), 477–493, 1091–1092
types, 472
metering evaporator pressure regulator, 579
metering orifice, 476
microchannel, 517
micron, 202
microprocessor, 317
mid-efficiency gas furnace, 1132
mid-position, 207
milk cooler, 1298
millivolt thermostat, 955
mineral oil (MO), 190
minimum efficiency reporting values and applications, 731
minimum stable signal (MSS) setting, 479
miscellaneous heat loads, 1366
mixing valve, 1041
MO. *See* mineral oil
Modbus, 1256
modulate, 942
modulating furnace, 1027
modulating refrigeration systems, 1334–1338
definition, 1335
hot-gas bypass capacity control, 1338
multiple-compressor systems, 1336–1338
variable-capacity, single-compressor systems, 1338
moisture indicator, 564
moisture in refrigerant circuit, 660
moisture solubility (chart), 1428
mold, 721
Montreal Protocol, 170, 1569
MOP thermostatic expansion valve (maximum operating pressure TXV), 491

Copyright Goodheart-Willcox Co., Inc.

motor
AC induction motors, 330–338
efficiency, 330
elementary electric motor, 326–330
external, 1469–1470
fan motors, 345–346
insulation class, 341
motor applications in HVACR systems, 342–346
motor frequency, 328
motor horsepower, 340
motor speed, 328–330
motor structure, 326
operation basics, 326–327
standard motor data, 339–342
three-phase, 336–337
voltage, 340
motor control systems
relays, 417
servicing, 414–417
troubleshooting and servicing controls, 414–416
motor controls, 357–376
bimetal devices, 360–362
electronic temperature sensors, 362
high-pressure, 363–365
low-pressure, 365–366
low-pressure safety control, 367
motor starting relays, 367–376
oil pressure motor controls, 367
pressure motor controls, 362–367
remote temperature-sensing elements, 359
switching devices used with sensing bulbs, 359
temperature motor control, 357–360
temperature-sensing bulbs, 358–359
motor nameplate, 326
motor protection devices, 376–380
bimetal protection devices, 378–379
circuit breakers, 378
external bimetal protection devices, 379
fuses, 376–378
overheating conditions, 379
overload protection reset, 379
thermistor-based protection devices, 380
motor starter, 372
motor starting relays, 367–376
contactors and motor starters, 371–374
current relays, 368–370
positive temperature coefficient relays, 374–376
potential relays, 370–371
relay terminals, 369
solid-state relays, 374
motor terminal box, 326
motor water valve, 891
motorized mixing valve, 1042
motors and compressors
adding oil to system, 1505–1507
motor efficiency, 1502
servicing, 1502–1507
servicing external motors, 1503–1504
servicing hermetic motor burnouts, 1504–1505
MSS. *See* minimum stable signal
muffler, 447
mullion heater, 628
mullion heater failure, 648
multimeters, 126, 396–397
analog or digital, 126
continuity check, 397
definition, 396
diode check, 396–397
frequency check, 397
multiple-blade damper, 766
multiple chemical sensitivity (MCS), 730
multiple-compressor systems, 1336–1338
multiple-evaporator system, 1334
defrosting, 525–531
installing TXVs in, 1404
using check valves, 567–568
using EPRs, 577–581
multipoise furnace, 1025
multipurpose fuse, 377
multistage systems, 1338–1343
cascade refrigeration systems, 1342–1343
compound refrigeration systems, 1338–1341
multistage thermostat, 950
multizone ductless split systems, 825–831
definition, 825
ductless split system installation, 829
ductless split system service, 829–831

N

NAHB. *See* National Association of Home Builders
nameplate voltage. *See* rated voltage
NATE (North American Technical Excellence), 18
National Association of Home Builders (NAHB), 983
National Electrical Code (NEC), 296
accessible outlets for HVACR equipment, 298
Class 2 circuit, 296
electrical disconnect box, 299
for electric heating applications, 1197–1198, 1201–1204, 1209–1210, 1212
GFCI outlets, 301
National Fire Protection Association (NFPA), 1157
natural-convection condensers, 95, 614
natural-draft cooling tower, 889
natural-draft evaporator, 98, 513, 617
NC. *See* normally closed
near-azeotropes, 174
NEC. *See* National Electrical Code
NEC motor nameplates, 339
negative temperature coefficient (NTC), 315
net metering, 1232
net stack temperature. *See* stack temperature

Copyright Goodheart-Willcox Co., Inc.

networking, 11
neutral flame, 154
neutron, 272
newton, 58
NFPA 31, 1157–1158, 1176, 1178–1180
nitrogen, 689
nitrogen oxide (NO_X), 722
NO. *See* normally open
no cooling service call, 1471
noise absorber, 794
noise amplifier, 794
noise carrier, 794
noise exposure levels, 35
noise source, 793
non-100% shutoff, 1129
noncondensables
    definition, 1425
    in capillary tube system, 1442–1443
    in TXV system, 1443
    servicing system with noncondensables trapped in condenser, 1443–1446
noncondensing furnaces, 1023
nonfreezing solution defrost, 531
nonintegrated ignition control module, 1128
normally closed (NC), 318
normally closed damper, 970
normally open (NO), 318
normally open damper, 970
no-start condition, diagnosing, 643
NO_X. *See* nitrogen oxide
nozzle-type humidifier, 931
NTC. *See* negative temperature coefficient
N-type material, 310
nucleus, 272

O

O_2. *See* oxygen
O_3. *See* ozone
Occupational Outlook Handbook, 10
Occupational Safety and Health Act (OSHA), 24
ODP. *See* ozone depletion potential
ODT. *See* outdoor design temperature
off-cycle defrost, 534
offset, 382
ohm, 273
ohm out, 976
Ohm's law, 274–275
ohmmeters, 312, 393–394
oil and moisture indicators, color codes, 564
oil binding, 503
oil burner, 1161–1169
    construction, 1161–1165
    definition, 1161
    electrodes, 1165
    fans, 1167
    fuel units, 1168
    motors, 1167
    nozzles, 1165–1167
oil burner fan, 1167
oil burner motor, 1167
oil burner nozzle, 1165
oil burner problems and causes (chart), 1184–1185
oil canning, 764
oil circulation, piping, 1391
oil control systems, 462–466
    oil level regulator, 464
    oil reservoir, 464
    oil safety control, 464–466
    oil separator, 462–464
oil deaerator, 1158
oil-fired heating systems, 1148–1191
    basic oil furnace operation, 1150–1151
    combustion efficiency, 1152–1157
    fuel line components, 1157–1161
    fuel oil, 1151–1152
    furnace exhaust, 1176
    oil burner installation, 1180–1181
    oil burners, 1161–1169
    oil furnace maintenance, 1181
    primary control units, 1169–1176
    storage tank and fuel line installation, 1177–1180
    system service, 1176–1187
    troubleshooting oil furnaces, 1181–1187
oil furnace combustion efficiency (chart), 1154
oil furnace exhaust, 1176
oilless bushing, 411
oil level regulator, 464
oil reservoir, 464
oil ring, 432
oil safety control, 464
oil separator, 94
oil slugging, 452
one-pipe fuel delivery system, 1157
one-pipe hydronic system, 1048
open circuit, 278
open end wrench, 109
open on rise of differential pressure (ORD) valve, 586
open on rise of inlet pressure (ORI) valve, 585
open ribbon, 1195
open wire, 1194
open-drive compressor motors, installing, 1412
open-drive compressors, 424–426, 1471–1474
    belt-driven, 425
    checking, 1471–1474
    crankshaft seal leak detection, 1473–1474
    direct-drive, 424
    efficiency test, 1472
    engine-driven, 425–426
    leaking compressor valves, 1472–1473
open-loop control system, 382
open-loop cooling tower, 888

Copyright Goodheart-Willcox Co., Inc.

open-loop ground-source heat pump system, 1085
operating cycle, 1381
ORD. *See* open on rise of differential pressure
ORI. *See* open on rise of inlet pressure
orifice, 472
O-ring, 450
OSHA. *See* Occupational Safety and Health Act
outdoor coil, 1082
outdoor design temperature (ODT), 990
outdoor reset control, 1062
outdoor ventilation and heat reclamation, 1271
outside length, 413
overcurrent protection, compressors, 458
overdefrosting, 524
overfire draft test, 1155
overfiring, 1153
overflow switch, 830
overload, 303
overload protection, servicing a compressor, 1469
oxidizing flame, 154
oxyacetylene, 152
oxygen (O_2), 689, 722, 1120
ozone (O_3), 170, 722
ozone depletion, 1569
ozone depletion potential (ODP), 171, 1569
ozone layer, and refrigerants, 170–171

P

packaged outdoor air-conditioning unit, 860
packaged systems, 1334
packaged terminal air conditioners (PTACs), 819–821
packaged terminal heat pump (PTHP), 819
PAG. *See* polyalkylene glycol
parallel circuit, 280
parallel compressor rack, 1281
partial vacuum, 78
pascal, 74
Pascal's law, 75
passive recovery, 240–241
passive solar energy system, 1224
passively chilled beverage dispenser, 1292
patterning, 1165
PC. *See* post-condenser
PCB. *See* printed circuit board
PCM. *See* phase change material
Peltier effect, 1321
perfect vacuum, 77
permanent split capacitor (PSC) motor, 334
personal protective equipment (PPE), 33–36, 1569
    definition, 33
    eye protection, 34
    head protection, 33
    hearing protection, 33–34
    protective clothing, 35–36
    respiratory protection, 34–35
phase change material (PCM), 1235
phase loss monitor, 403
phase splitting, 331
phosgene gas, 152, 658
photoelectric device, 316
photovoltaic cell, 1228
pickup voltage, 371
pictorial diagram, 352
piercing valve, 211
piezoelectric crystal, 931
piezoelectric (ultrasonic) humidifier, 931
pilot light, 1124
pilot-operated reversing valve, 1094
pin punch, 119
pinch-off tool, 659
pipe
    connecting, 162–164
    CPVC pipe, 141–142
    cutting and joining plastic pipe, 163–164
    joining steel pipe, 162
    plastic, 141–143
    PVC pipe, 141
    solvent welding plastic pipe, 164
    steel, 142–143
pipe schedule, 162
pipe wrench, 109
piping
    compressor discharge line, 1394–1395
    condenser condensate line, 1391
    designing, 1388–1395
    liquid line, 1391–1392
    oil circulation, 1391
    pressure drop, 1388–1389
    refrigerant velocity, 1389–1391
    suction line, 1392–1394
    support and spacing (chart), 1180
piston, 431
piston pin, 433
piston ring, 432
pitot tube, 709
plate evaporator, 517
plate heat exchanger, 549
plate humidifier, 929
plenum-mounted humidifier, 929
pliers, 113–114
plumb, 121
pneumatic motor, 868
pneumatics, 867
POE. *See* polyol ester
pole, 317
pollen, 721
pollen count, 721
pollutant, 720
polyalkylene glycol (PAG) lubricant, 190
polygeneration. *See* trigeneration
polyol ester (POE) lubricant, 190

Copyright Goodheart-Willcox Co., Inc.

polyvinyl chloride (PVC), 141
ponded roof, 1273
poppet valves, 435
portable air conditioners, 823–825
portable humidifier, 933
positive pressure, 248
positive temperature coefficient (PTC), 315
positive temperature coefficient (PTC) relay, 374
post-condenser loop problems, 664
post-condenser (PC) loop, 628
post-purge, 1129
pot burner, 1161
potential energy, 56
potential relay, 370–371
pounds per square inch (psi), 78
pounds per square inch absolute (psia), 78
pounds per square inch gauge (psig), 78
pour point, 190
power, 58
power burner, 1124
power circuits, 295–302
    circuit protection, 298–301
    connectors and terminals, 297–298
    electrical codes, 296
    grounding and bonding, 301–302
    receptacle and plug configurations, 298
    single-phase and three-phase power, 295–296
    wire sizes, 296–297
power factor, 294
power factor meter, 397
power-open/power-closed damper, 970
power-stealing thermostat, 956
power tools, 122
PPE. *See* personal protective equipment
preignition, 1175
pre-purge, 1129
pressure
    atmospheres, 80
    Avogadro's law and ideal gas law, 83
    Boyle's law, 81
    calculating, 74
    Charles' law, 81
    combined gas law, 82–83
    Dalton's law, 83
    definition, 74
    effect on state changes in matter, 76–77
    gauge pressure and absolute pressure scales, 77–78
    Gay-Lussac's law, 81–82
    inches of mercury, 78
    inches or feet of water column, 78–79
    measuring, 77–80
    Pascal's law, 75
    pascals and kilopascals, 80
    perfect and partial vacuums, 78
    pressure gauges, 80
    relationship to volume and heat, 75
    torrs, bars, and millibars, 70
    units for pressure measurement, 78
pressure and temperature controls
    heating and comfort cooling systems, 415–416
    in refrigerators, coolers, freezers, 415
pressure change, 84
pressure dew point, 1306
pressure drop, piping, 1388–1389
pressure-enthalpy cycles, 1373–1375
    cascade system, 1374
    compound systems, 1374
    hot-gas cycles, 1374–1375
pressure-enthalpy diagram, 180–184, 1371–1373, 1425
    effective latent heat, 1373
    reading, 1371–1373
    saturated liquid, 1372
    saturated vapor, 1372
    subcooled liquid, 1372–1373
    superheated vapor, 1372
pressure-enthalpy table, 179
pressure equalizing. *See* atmospheric balancing
pressure gauges, 201–206
    care and calibration, 204–206
    compound gauges, 203
    definition, 201
    for specific refrigerants, 204
    high-pressure gauges, 204
    vacuum gauges, 202
    wireless pressure gauges, 204
pressure hazards, 29–30
    non-refrigerant pressurized cylinders, 30
    refrigerant cylinder safety, 29–30
pressure-heat diagram. *See* pressure-enthalpy diagram
pressure limiter, 491
pressure lubrication system, 448
pressure motor control, 362
pressure-reducing valve (PRV), 1043
pressure-regulating valves, 575–584
    condenser pressure regulators, 585–587
    crankcase pressure regulators (CPRs), 459–460, 575–577
    definition, 575
    evaporator pressure regulators (EPRs), 577–581
    head pressure control valves, 584–592
    low-ambient controls, 587–589
    receiver pressure regulators, 585–587
    relief valves, 581–584
pressure regulator, 1570
pressure switch, 1131
pressure-temperature (P/T) chart, 178
pressure-temperature curve, 178
pressure water valve, 892
pressured water system, 887
prick punch, 119
primary air, 748, 1118
primary coil, 285

Copyright Goodheart-Willcox Co., Inc.

primary control units, 1169–1176
cad cell relays, 1172
definition, 1169
functions, 1175–1176
ignition control, 1172–1175
stack relays, 1170–1172
primary heat exchanger, 1022
primary refrigerant, 873
printed circuit board (PCB), 316
processing plant, 1397
process tube, 658
product heat load, 1361
programmable thermostat, 957, 1271
proton, 272
PSC. *See* permanent split capacitor motor
psi (pounds per square inch), 78
psia (pounds per square inch absolute), 78
psig (pounds per square inch gauge), 78
psychrometric chart, 697
psychrometric properties of air, 696–702
psychrometer, 696–697
psychrometric chart, 697–702
reading chart, 699–701
using chart, 701–702
psychrometry, 696
P/T. *See* pressure-temperature charts
PTAC. *See* packaged terminal air conditioners
PTC. *See* positive temperature coefficient
PTHP. *See* packaged terminal heat pump
P-type material, 310
Public Utility Regulatory Policies Act, 1231
pulley, 412
pump-down, 239
pump-down defrost, 535
pump-down solenoid, 535
punches, 118–119
punctuality, 15
purge unit, 878
purging, 158
push-pull liquid recovery method, 244–245
PVC (polyvinyl chloride), 141
pulse width–modulating (PWM), 500
PWM solenoid EEV, 500

Q

queen valve, 210
quench valve, 1312
quick chillers, 1289–1291
quick-connect coupling, 839

R

R-11, 173
R-11, (high-pressure appliance), 1572
R-12, 172
R-12, (high-pressure appliance), 1572
R-13, (very high-pressure appliance), 1572
R-22, 172, 1544
R-22, (appliance containing less or more than 200 lb of refrigerant), 1572
R-114, (high-pressure appliance), 1572
R-123, (low-pressure appliance), 1545, 1572
R-124, 174
R-134a, 172, 176, 179, 181, 1390
R-152a, 174
R-290, 175
R-401A, 174, 1546
R-404A, 172, 1547
R-407C, 174, 184, 1548
R-410A, 175, 1549
R-441A, 175
R-500, 173
R-500, (high-pressure appliance), 1572
R-502, (high-pressure appliance), 1572
R-503, (very high-pressure appliance), 1572
R-507A, 1550
R-508B, 1551
R-600a, 175
R-717 ammonia, 185
R-744, 176
radial flow fan, 775
radiant hydronic systems, 1051–1054
radiation, 65
radiator, 1045
radon (Rn), 722
railcar refrigeration, 1316
range, 353
range adjustment, 353–355
definition, 353
Rankine scale, 60
rare gases, 690
rated full-load speed, 329
rated voltage, 339
RCRA. *See* United States Resources Conservation and Recovery Act
receiver pressure regulator, 586
reciprocating, 93
reciprocating compressor, 428–438
compressor housing and crankcase, 436
connecting rods, 430–431
crankshaft, 430
cylinder head, 435
cylinders, 433
definition, 428
designs, 436–437
dual-capacity, 437–438
intake and exhaust ports, 436
pistons, piston rings, and piston pins, 431–433
Scotch yoke, 438
valves and valve plates, 433–435

Copyright Goodheart-Willcox Co., Inc.

reclaiming, 225
reconditioning equipment after flood, 1519–1520
recordkeeping, 1572
recovering, 225
recovery cylinder
capacity, 245–246
definition, 199
disposable cylinders comparison, 1569
recovery procedures
active recovery, 240
liquid recovery method, 242–244
passive recovery, 240–241
push-pull liquid recovery method, 244–245
Type I certification, 1571
Type II certification, 1571
Type III certification, 1571
vapor recovery method, 241–242
recovery, recycling, and reclaiming equipment, 225–229, 1569
digital charging scales, 228–229
refrigerant recovery equipment, 226
refrigerant recycling equipment, 227–228
recovery/recycling machine, 227
rectifier, 314
recycle limit, 1175
recycle time, 1175
recycling, 225
reed switch, 942
reed valves, 433–435
refractory material, 1176
refrigerant, 168–195
and ozone layer, 170–171
applications, 184–185
chemical classifications, 175–176
chlorofluorocarbons (CFCs), 172
classifying, 171–175
commonly used new, 185
conservation, 228
criteria for new, 184–185
definition, 90
environmental impact, 171
evacuating a system, 253–258
hydrochlorofluorocarbons (HCFCs), 172
hydrofluorocarbons (HFCs), 172
hydrofluoro-olefins (HFOs), 174
identifying, 175–177
inorganic, 185–189
lubricants (oil), 189–192, 1569
phaseout, 184
pressure-enthalpy diagrams, 180–184
pressure-enthalpy tables, 179–180
pressure-temperature (P/T) charts, 178–179
pressure-temperature curves, 178
properties, 177–184
pumping down refrigeration system, 239–240
recovery concepts and procedures, 240–248
recycling equipment, 227–228
redistributing, 239–248
refrigeration lubricants, 189–192
states (vapor vs. liquid), 1569
temperature guidelines, 178
tips for performing evacuations, 254–255
toxicity and flammability properties, 177–178
working with, 234–269
refrigerant applications, 184–185
commonly used new refrigerants, 185
criteria for new refrigerants, 185–186
phaseout of refrigerants, 185
refrigerant blends, 172–174
azeotropic mixtures, 173
mixing, 174
plotting, 183–184
zeotropic blends, 173–174
refrigerant charge
checking, 236–239, 1430–1431
checking by subcooling, 236–237
checking by superheat, 237–239
refrigerant cylinder color code, 176–177
refrigerant cylinders, 198–200
disposable, 198–199
recovery, 199–200
regulations, 198
storage, 198
refrigerant dye leak detection, 221
refrigerant flow components, 558–595
head pressure control valves, 584–592
pressure-regulating valves, 575–584
refrigerant flow valves, 565–574
refrigerant loop components, 560
storage and filtration components, 560–565
refrigerant handling and service, equipment and instruments, 196–233
refrigerant jet system, 1326
refrigerant leaks
epoxy resin repair, 252–253
high-pressure testing, 249
inert gas, 249
locating and repairing, 248–253
pressure testing, 249–251
proper charging gas, 248
recovery before soldering/brazing, 251
repairing leaks with brazing, 251–252
refrigerant line
condensate line, 1391
discharge line, 92–94
installing in commercial systems, 1407–1411
installing in multiple-evaporator systems, 1408–1410
liquid line, 97
suction line, 100
refrigerant line valve, 566
refrigerant loop components

Copyright Goodheart-Willcox Co., Inc.

flow valves, 565–566
hot-gas bypass valves, 572–574
hot-gas defrost valves, 571–572
line valves, 566
liquid injection valves, 575
liquid line filter-driers, 562–563
liquid receivers, 561–562
service valves, 567
shutoff valves, 566–567
sight glasses, 563–565
solenoid valves, 569–571
storage and filtration components, 560–565
suction line filter-driers, 560–561
refrigerant metering device. *See* metering devices
refrigerant migration, 567
refrigerant moisture content levels (chart), 1428
refrigerant numbering system, 176
refrigerant oil, adding to system, 1505–1507
refrigerant piping penetrations, 1408
refrigerant quality, 1372
refrigerant states (vapor vs. liquid), 1569
refrigerant toxicity and flammability classifications (chart), 31
refrigerant tubing and pipe, 138–140
ACR copper tubing, 138
aluminum tubing, 139–140
stainless steel tubing, 139
refrigerant velocity, piping, 1389–1391
refrigerated dispensers, 1291–1297
beverage dispensers, 1292–1293
dispensing freezers, 1295–1297
milk dispensers, 1295
vending machines, 1297
water cooler requirements, 1294
water coolers, 1293–1295
refrigeration component sizing and selection information, 1380
refrigeration effect
measuring, 68–69
SI derived units for measuring, 69
ton of refrigeration effect, 68
US customary units for measuring, 69
refrigeration lubricants, 189–192
adding to system, 191
contaminated lubricant, 192
dielectric properties, 190
handling, 190–191
lubricant additives, 190
properties, 189–190
thermal stability and flash point, 190
types, 190
viscosity, 190
wax content, 189
refrigeration methods, alternative, 1319–1329
dry ice refrigeration, 1320–1321
expendable refrigeration systems, 1319–1320
jet cooling systems, 1325–1327
liquid nitrogen safety, 1320
Stirling refrigeration cycle, 1327–1329
thermoelectric refrigeration, 1321–1323
vortex tubes, 1324–1325
Refrigeration Service Engineers Society (RSES), 18
refrigeration service valve wrench, 111
refrigeration system analyzer, 217
refrigeration systems
and applications, 1310–1331
basic, 88–103
compression, 92–94
compression refrigeration cycle, 90–91
condensing, 94–97
evaporating, 98–101
high side and low side, 91–92
metering device, 97–98
pumping down, 239–240
refrigeration systems and applications, 1310–1331
alternative refrigeration methods, 1319–1329
transportation refrigeration, 1312–1319
refrigerator/freezer
cabinet construction, 603–605
domestic refrigeration, 598–599
freezers, 599–601
innovative technologies, 605–607
media capabilities, 605–606
overview, 596–609
refrigerator-freezers, 602–603
refrigerator-only units, 601
wine coolers, 606–607
refrigerator, starting, 642–643
refrigerator temperatures, effect on altitude, 659
refrigerator-freezers, 602–605
refrigerator-only units, 601
register, 765
relative density, 57
relative humidity, 690
relay, 318–319
amperage relay. *See* current relay
cad cell relays, 1172
current relays, 368–370
electronic relay. *See* solid-state relay (SSR)
lockout relay, 384
motor starting relays, 367–376
positive temperature coefficient relays, 374–376
potential relays, 370–371
relay terminals, 369
solid-state relays, 374
stack relays, 1170–1172
voltage relay. *See* potential relay
relief valve, 581
fusible plugs, 582
rupture disk, 583–584
safety during procedures, 1570
spring-loaded relief valve, 583

Copyright Goodheart-Willcox Co., Inc.

remote controller, 1252
remote sensing, 1126
remote temperature-sensing element, 359
repair, 44
reset limit, 1175
residential central air-conditioning systems, 834–857
    central air conditioning, 836–838
    comfort cooling controls, 841–843
    inspecting, 848–850
    installing central air conditioning, 843–848
    servicing, 850–852
    split systems, 838–841
    variable refrigerant flow (VRF) systems, 852–855
resistance, 273–274
resistor, 273
respiration heat, 1366
retarder, 201
retrofitting, 265
    R-22 to R-410A retrofit, 265–266
    retrofit recovery, 245
return air duct, 748
reverse bias, 311
reverse cycle defrost, 1104
reverse cycle hot-gas defrost, 527
reverse osmosis systems, 634
reverse return hydronic system, 1049
reversing valves, 1093–1095
    connections, 1093–1094
    definition, 1093
    types, 1094–1095
ribbon burner, 1123
rich, 1118
riser, 567, 1106
riser valve, 567
rms. *See* root mean square
Rn. *See* radon
rollout switch, 1130
roof mist cooling system, 198
roof pond cooling, 918
rooftop and outdoor units, 860–872
    air-side economizers, 863–865
    comfort cooling controls, 865–868
    enthalpy control, 865
    installing, 868–871
    limit controls, 866–867
    RTU air circulation, 863–868
    RTU heating system, 862–863
    sequential controls, 867
    servicing units safely, 871
    stuck economizer louvers, 865
    variable refrigerant flow (VRF) systems, 871–872
rooftop unit (RTU), 860
room air conditioners, 808–819
    definition, 808
    features, 810
    installing, 810–812
    restarting, 809
    servicing, 812–819
root mean square (rms), 292
rotary compressor, 438–441
    blade (vane) construction, 441
    cylinder construction, 441
    definition, 438
    rotating-vane, 439
    rotor construction, 441
    stationary-blade (divider-block), 439–441
rotating disk humidifier, 931
rotating drum humidifier, 930–931
rotor, 326
router, 1254
RSES (Refrigeration Service Engineers Society), 18
RTU. *See* rooftop unit
run capacitor, 332
run winding, 330
running terminal, 344
rupture disc, 583
R-value (insulation for climate zones of United States, chart), 1265
R-value. *See* thermal resistance
R-values (thermal resistance), 1352

S

safety, 22–41
    and the government, 24
    hazard assessment, 24–33
    personal protective equipment (PPE), 33–36
    safe work practices, 36–39
    safety certifications, 39
    working with refrigerants, 1569–1579
safety controls, electric furnace, 1208–1209
safety data sheet (SDS), 31–32
safety stat. *See* high-limit switch
sail switch, 1131
saturated liquid, 1372
saturated vapor, 84
Saybolt universal second, 1152
SBS. *See* sick building syndrome
scale deposits, water-cooled condensers, 1482
Schrader valve
    definition, 211
    installing, 658
Scotch yoke, 438
SCR. *See* silicon-controlled rectifier
screw compressor, 442–444
    definition, 442
    design variations, 444
screwdrivers, 114–116
scroll compressor, 441
SDS. *See* safety data sheet
sealing devices, compressor components, 450–451
seasonal average COP, 1270

Copyright Goodheart-Willcox Co., Inc.

seasonal energy efficiency ratio (SEER), 1269
secondary air, 1118
secondary coil, 285
secondary heat exchanger, 1022
secondary loop refrigeration systems, 1343–1345
    definition, 1343
    GreenChill certification, 1345
secondary refrigerant, 873
Section 608 regulations, 1569
Seebeck effect, 320
SEER. *See* seasonal energy efficiency ratio
SEER system ratings, 1270
selective surface, 1221
self-contained air-conditioning system, 808
self-contained water cooler, 1295
semiconductor, 278
semiconductor basics, 310–312
    diodes, 310–312
    P-type and N-type materials, 310
semi-hermetic compressor, 427
sensible heat, 67, 1362
sensible heat ratio (SHR), 699
sensing bulb
    adsorption gas cross-charged, 487–488
    definition, 358, 477
    gas cross-charged, 487
    gas-charged, 486–487
    liquid cross-charged, 486
    liquid-charged, 485–486
    mounting, 488–489
    variations, 484–489
sensing bulb placement, 1405
sensor, 312
sequencer, 1205
series circuit, 280
series loop hydronic system, 1048
series-parallel circuit, 281
server, 1255
service, 6
service calls, 42–53
    customer service, 47–52
    troubleshooting, 44–47
    types of service, 44
service heat load, 1350, 1357–1367
    air change heat load, 1361
    calculating cabinet volume, 1359–1361
    definition, 1350
    defrosting heat sources, 1367
    heat from electric motors, 1366–1367
    high-efficiency lighting, 1366
    latent heat, 1362–1365
    lights, 1366
    manually calculating, 1359
    miscellaneous heat load, 1366
    people, 1367
    product heat load, 1361–1362
    respiration heat, 1366
    sensible heat, 1362
    total product heat load, 1366
    using tables to calculate, 1357–1359
service valves, 206–214
    access ports, 210–211
    bolted-on piercing valves, 212
    brazed-on piercing valves, 213
    cracking open service valves, 111
    definition, 206
    discharge service valve (DSV), 209
    high-side, 209–210
    king valve, 210
    liquid line service valve, 209
    liquid receiver service valve (LRSV), 209
    low-side, 208–209
    maintenance and operation, 210
    other types of piercing valves, 214
    piercing valves, 211–214
    queen valve, 210
    suction line service valve, 208
    suction service valve (SSV), 208
    valve positions, 207–208
serviceable hermetic compressor. *See* semi-hermetic compressor
servicing, 44
servicing electric motors and controls, 390–421
    electrical test equipment, 392–400
    external motors, 409–414
    fan motors, 407–408
    hermetic compressor motors, 404–407
    motor control systems, 414–417
    troubleshooting, 400–404
set point, 382
shaded-pole motor, 335
shaft seal, 424
shell-and-coil condenser, 536
shell-and-pipe condenser. *See* shell-and-tube condenser
shell-and-tube condenser, 536
shock freezer. *See* blast freezer
shock, preventing, 651
short circuit, 302
short cycling, 416, 1451–1453
    anti–short cycle controls, 1452
    commercial systems, 1451–1453
    definition, 416
    high-pressure safety controls, 1452
    low-pressure controls, 1451–1452
    overload currents, 1452
    temperature controls, 1451
shortage of refrigerant, 660
SHR. *See* sensible heat ratio
shutoff valves, 566–567
    manifold valves, 566–567
    riser valves, 567
SI system, 56

Copyright Goodheart-Willcox Co., Inc.

sick building syndrome (SBS), 730
side-by-side, 603
sight glass, 563–565
definition, 563
installing in commercial systems, 1411
signal word, 32
silicon-controlled rectifier (SCR), 313
single-cut file, 119
single-effect absorption system, 907
single flare, 147
single-phase, 295
single-phase motor, 330
single phasing, 403
SIP. *See* structural insulated panel
sizing components, 1380–1386
slave thermostat, 969
slip, 329
slip ring, 284
slip ring lubricating system, 410
slotted burner, 1123
smoke, 720
smoke generators, 788
smoke test, 1156
snap-action evaporator pressure regulator, 580
SNAP (Significant New Alternatives Policy), 175
SO_2. *See* sulfur dioxide
social media profile, 11
socket wrench, 107
softened water, 933
soft lockout, 1129
software and apps for load calculations, 1014–1016
soft water, 933
solar array, 1228
solar cell, 1228
solar cell applications, 1231–1232
building-integrated systems, 1232
net metering, 1231–1232
portable power sources, 1231
roof collector requirements, 1232
solar collectors
angle of collector, 1223
concentrating collectors, 1223–1224
evacuated tube collectors, 1223
flat-plate collectors, 1221–1223
solar domestic hot water (DHW) system, 1226
solar energy, 1219
solar energy cooling systems, 1232–1234
solar absorption air-conditioning systems, 1232–1233
solar mechanical air-conditioning systems, 1233–1234
solar energy to electricity
converting, 1228–1234
occupational hazards, 1229
solar cell applications, 1231–1232
solar cell construction, 1229–1231
solar heat exchangers, 1227
solar heating systems, 1224–1226
active liquid-based, 1225–1226
for pools, hot tubs, and spas, 1227
heat pumps, 1105–1106
passive air-based, 1224–1225
passive liquid-based, 1225
solar chimneys, 1225
solar module, definition, 1228
solar power and thermal storage, 1218–1243
applications for solar heating systems, 1226–1227
converting solar energy to electricity, 1228–1234
solar collectors, 1221–1224
solar energy cooling systems, 1232–1234
solar heating systems, 1224–1226
supplementary heat, 1227–1228
thermal energy storage (TES) systems, 1234–1241
understand the nature of solar energy, 1220
solar products, 1271
solder alloys (chart), 155
soldered and brazed connections, 150–160
brazing, 157–160
brazing eye protection, 158
brazing procedure, 158–160
soldering, 154–157
soldering and brazing equipment, 151–153
soldering procedure, 156–157
types of flames, 154
soldering, 154
solenoid, 318–319
solenoid valve, 569–571
checking, 1489
definition, 569
liquid line solenoid valve, 528–530
reversing valves, 570–571
three-way solenoid valves, 570
two-way solenoid valves, 570
solenoid water valve, 891
solid, 66
solid desiccant, 676
solid-state device, 310
solid-state igniter, 1174
solid-state relay (SSR), 374
solvent welding
cements and primers, flammability, 164
definition, 163
spark igniter, 1125
specialty certification, 17
specific enthalpy, 65
specific gravity, 57
specific heat capacity, 62, 1362
specific heat of vapors, 1362
specific volume, 57
spirit level. *See* level (tool)
splash system, 448
split air-conditioning system, 808

Copyright Goodheart-Willcox Co., Inc.

split condenser valve, 588
split damper, 766
split-phase motor, 332
split systems, 838–841, 1334
field-erected split systems, 840–841
quick-connect couplings, 839
unitary split systems, 838–839
spot cool, 823
spring-loaded relief valve, 583
spud, 1122
squirrel cage rotor, 326
SSR. *See* solid-state relay
stack relay, 1170
stack temperature
definition, 1121
stack temperature test, 1154–1155
standard oil burner, 1164
standard supplies, 126–130
abrasives, 129
bolts and cap screws, 128
brushes, 129
cleaning solvents, 129–130
fasteners, 126–128
gaskets, 128
machine screws, 127
standby, 1175
standby power, 1314
standing-pilot ignition system, 1124
start capacitor, 331
start winding, 330
starting collar, 756
starting terminal, 344
starved evaporator, 587
starving, 479
state change, 84
static condenser. *See* natural-convection condenser
static electricity, 275, 732
static evaporator. *See* natural-draft evaporators
static loss, 1392
static pressure disk, 1162
stationary refrigerant detector, 30
stator, 326, 445
steam heating system, 1054
steam jet systems, 1325–1326
Stirling cycle
definition, 1327
Stirling refrigeration cycle, 1327–1329
stoichiometric combustion, 1117
storage cylinder, 198
stratification, 713, 747
stratosphere, 689
street fitting, 162
stroke, 1386
strong solution, 900
structural insulated panel (SIP), 1264
subcooler, 549
subcooling, 68, 236
sublimation, 1320
suction line, 100
checking, 1491–1492
condensation, 100
pressure drop, 1492
suction line-liquid line heat exchanger, 547
suction line service valve, 208
suction line temperature, 1380–1381
suction service valve (SSV), 208
sulfur dioxide (SO_2), 689, 721
summer condenser, 588
summer design temperatures (chart), 1351
summer/winter condenser, 588
sun heat loads, 714
superheat, 68, 237, 479
superheated, 100
superheated vapor, 1372
superheat/subcooling calculators, 1490
supplementary heat, 1227–1228
electric heating, 1228
heat pumps, 1228
oil and gas heating, 1228
supplied-air respirator, 35
surging. *See* hunting
sustainable design, 983
swaging, 160
swaged connections, 160–162
swaging tubing with swaging adapter, 161–162
sweet water, 514
sweet water bath, 514
swinging-vane anemometer, 707
switches, 317–318
synchronous speed, 328
synthetic dust weight arrestance, 734
system components, removing, 682
system lag, 947
system overshoot, 947
system service fundamentals
commercial systems, 1498–1502
isolating part of system, 1498–1501
isolation valve options, 1499
reassembling refrigeration systems, 1501–1502
Système International d'Unités. *See* SI system
systems of measurement, 56

T

tagout (TO), 24
taking initiative, 15
tap drill sizes (chart), 117
tap water cooler, 1294
tare weight, 246
target superheat, 238
TEL. *See* total effective length
TEM. *See* total energy management

Copyright Goodheart-Willcox Co., Inc.

temperature, 60
temperature and moisture indicators, 565
temperature controls, heat pumps, 1100–1102
temperature conversions (formula), 60
temperature difference and relative humidity (chart), 1381
temperature glide, 174
temperature-heat diagram for water, 67
temperature limit switch, 947
temperature motor control, 357
temperature-pressure conditions
  analyzing, 655–659
  service valves and adapters on hermetic systems, 655–659
  systems with valve adapters, 657
temperature scales
  Celsius, 60–61
  Fahrenheit, 60–61
  Kelvin scale, 60–61
  Rankine, 60–61
temperature survey, 1484
temperature swing, 947
terminal unit, 1044
TES. *See* thermal energy storage
test cords, using to check continuity, 654
TFI. *See* trial for ignition
theoretical compressor volume
  calculating, 1386–1388
  volumetric efficiency, 1387
therm, 62
thermal conductance (C-value), 986
thermal conduction. *See* heat leakage load
thermal conductivity (K-value), 986
thermal detection system, 1125
thermal energy storage (TES) systems, 1234–1241
  cold thermal energy storage, 1235–1241
  CTES media, 1237–1239
  definition, 1234
  eutectic salts, 1239
  full-storage CTES, 1237
  latent thermal energy storage, 1235
  mechanical HVAC CTES systems, 1239–1241
  operation, 1235
  partial-storage CTES, 1237
  sensible thermal energy storage, 1234–1235
thermal mass, 1224
thermal overload, 459
thermal precipitation, 798
thermal resistance (R-value), 986
thermal stability, 190
thermal transmittance (U-value), 987
thermistors, 315–316
thermocouple, 320
thermodynamics of basic refrigeration cycle, 1370–1375
  practical pressure-enthalpy cycles, 1373–1375
  reading pressure-enthalpy diagram, 1371–1373
  refrigerant compression, 1370
thermoelectric couple, 1321
thermoelectric module, 1323
thermoelectric refrigeration, 1321–1323
thermometer, 122
thermosiphon effect, 1225
thermosphere, 689
thermostat, 940–981. *See also* temperature motor control
  adjusting controls, 681–682
  calibrating, 681
  combination, 949–950
  cooling, 949
  cooling system diagnostics, 966
  definition, 941
  digital and programmable, 955–960
  domestic and commercial refrigeration systems, 967
  features and options, 945–946
  free cooling, 962–963
  heating anticipators, 948–949
  heating system diagnostics, 964–965
  heating thermostats, 946–949
  installation, 960–964
  installing and servicing, 680–682
  installing wireless, 963–964
  line-voltage, 952, 967
  low-voltage, 952–955
  low-voltage measurements, 966–967
  mercury exposure, 944
  mercury thermostat disposal, 942–943
  millivolt, 955
  multistage, 950–952
  multistage HVAC systems, 966
  online account and downloading apps, 964
  open thermostat contacts, 947
  power-stealing, 956
  programmable, 957–958
  programming, 958–960
  sensing and operation, 942
  setting adjustment, 947
  thermostat diagnostics, 964–967
  troubleshooting, 967
  types, 946–952
  vibration, 966
  wireless, 956
  wiring diagrams, 954, 961–962
  zoned systems, 968–977
thermostat equipped with altitude adjustment, 659
thermostatic expansion valve (TXV), 477–493
  adjustment, 479–481
  bleed valves and bleed ports, 484
  capacities, 489
  checking, 1485–1486
  definition, 477
  design, 482–489
  externally equalized, 483–484
  installing in multiple-evaporator systems, 1404

Copyright Goodheart-Willcox Co., Inc.

internally equalized, 483
operation, 478–482
pilot-controlled, 492–493
sensing bulb variations, 484–489
special TXVs, 489–493
thermostatic expansion valve sensing bulbs, installing, 1404–1405
thermostatic mixing valve (TMV), 1041
thermostatic water valve, 893
thermostat troubleshooting guide and voltage references (chart), 416
thin film solar cells, 1230
THR. *See* total heat of rejection
three-phase, 295
three-phase motor, 336
through-the-wall-room air conditioners. *See* room air conditioners
throw, 317, 748
tilt switch. *See* mercury switch
time-delay fuse, 377
time-initiated
pressure-terminated defrost timer, 524
temperature-terminated defrost timer, 524
time-terminated defrost timer, 524
TMV. *See* thermostatic mixing valve
TO. *See* tagout
ton of refrigeration, 68
tools and supplies, 104–135
employer-provided tools/equipment, 130–131
hand tools, 106–121
instruments, 122–126
power tools, 122
standard supplies, 126–130
top freezer, 602
torque, 330
torque wrench, 112
torr, 79
Torx® wrench, 110
total cooling load, 1014
total effective length (TEL), 772
total energy management (TEM), 1248
total energy system, 1273
total equivalent length, 1389
total heat load, 1350
total heat loss, 1014
total heat of rejection (THR), 1382
total pressure drop, 781
toxicity, 177
transducer, 312
transformer, 285
transformer basics, 285–286
transistor, 314
transportation refrigeration, 1312–1319
eutectic plates, 1315–1316
intermodal shipping container refrigeration, 1316
marine refrigeration, 1316–1319
railcar refrigeration, 1316
refrigerated trailers, 1313–1314
refrigerated trucks, 1314
truck and trailer, 1312–1316
triac, 313
trial for ignition (TFI), 1129
trigeneration, 913
triple evacuation, 256
tripped circuit breaker, 378
troposphere, 688
trouble code, 46
troubleshooting, 44–47
absorption and evaporative cooling systems, 898–923
building control system, 1256–1257
charts and procedures, 44–47
checking possible cause, 46
commercial air-conditioning systems, 858–897
commercial refrigeration, 1424–1430
commercial systems—component diagnosis, 1466–1495
commercial systems—system diagnosis, 1422–1465
definition, 44
description of problem, 46
domestic refrigerators and freezers, 638–667
ductless air-conditioning systems, 804–833
electric heating system, 1213–1214
energy conservation, 1274
gas furnaces, 1139–1142
heat pumps, 1108–1110
heating and cooling loads, 982–1019
high-side restriction, 1439–1440
humidity control, 936–937
hydronic systems, 1065–1075
ice machines, 1454–1462
inefficient compressor, 1437
low-side restriction, 1440–1441
oil furnaces, 1181–1187
outdoor condenser louvers, 1481
outdoor condensers, 1480
overcharged system with capillary tube, 1437–1438
overcharged system with TXV, 1438–1439
remedy, 47
residential central air-conditioning systems, 834–857
restriction in capillary tube, 1433–1434
restriction in TXV, 1434–1437
servicing motor control systems, 414–417
thermostats, 974–977
undercharged system with capillary tube, 1432
undercharged system with TXV, 1433
using nonstandard charts, 47
troubleshooting chart, definition, 644
true power, 294
tube couplings, specialized, 162
tube-within-a-tube condenser, 537

Copyright Goodheart-Willcox Co., Inc.

tube-within-a-tube condenser, 537
tubing
ACR copper tubing, 138–139
aluminum, 139
bending, 144–146
brittle, 147
connecting, 146–162
copper water tubing, 140
cutting, 143–144
cutting with hacksaw, 143–144
filings and chips in, 144
flared connections and fittings, 146–150
metric tubing fittings, 150
non-refrigerant tubing and pipe, 140
soldered and brazed connections, 150–160
specialized tube couplings, 162
square cutting, 143
squaring and reaming tubing end, 144
stainless steel, 139
swaged connections, 160–162
tubing cutter, 143
working with, 139
tubing and piping, working with, 136–167
tubular cased wire, 1195
twist drill bits, 116–118
two-pipe fuel delivery system, 1157
two-pipe hydronic system, 1049
two-stage furnace, 1027
TXV. *See* thermostatic expansion valves (TXVs)
Type I (small appliances), 1569–1570
Type II (high- or very high-pressure appliances), 1570
Type III (low-pressure appliances), 1570–1571

U

UA. *See* United Association
ultimate carbon dioxide content, 1120
ultimate vacuum, 223
ultrasonic, 649
ultrasonic leak detector, 223
ultraviolet germicidal. *See* UVG
ultraviolet lamp, 1285
ultraviolet light, 737–739
undercharged system with capillary tube, 1432
under-duct humidifier, 929
ungrounded conductor, 301
unintentional voltage drop, 303
unitary central air-conditioning system, 837
unitary split systems, 838–839
United Association (UA), 19
United States Department of Transportation (DOT) regulations, 1501
United States EPA regulations, 1501
United States Resources Conservation and Recovery Act (RCRA), 1501
unit equivalents, specific volume, 57
unit heater, 1031
unloader, 448
unsaturated organic compounds, 176
unvented attic, 751
upflow furnace, 1026
upright freezer, 599
usage heat gain (table), 1360–1361
usage heat load. *See* service heat load
US Department of Energy climate zones, 1264
US Department of Energy, energy auditing resources, 1247
US Green Building Council, 1006
U-value. *See* thermal transmittance
UVG (ultraviolet germicidal), 737

V

VA. *See* volt-amperes
vacuum gauge, 202
vacuum pressure values, conversion chart, 79
vacuum pumps, 223–225
definition, 223
oil in vacuum pumps, 224
testing, 225
types, 224
valve adapters, 657
valve core, 211
valve core remover, 211
valve plate, 433
valves
evaporator pressure regulators (EPRs), 1518–1519
expansion valves, 1516–1518
replace hot-gas valves, 1519
replacing service valves, 1519
replacing solenoid valves, 1519
servicing, 1516–1520
vane anemometer, 707
vane switch. *See* sail switch
vaporizing humidifier, 932
vapor recovery method, 241–242
variable-capacity, single-compressor systems, 1338
variable frequency drive (VFD), 338
variable refrigerant flow (VRF) systems, 829, 852–855
inverter-driven compressors, 853–855
residential, 855
variable speed motors/variable frequency drives, 1271
vented attic, 751
ventilation, 711–713
ventilation requirements, 748–753
attic ventilation, 751–753
basement ventilation, 753
calculating air changes, 750–751
ventilation recommendations, 751
ventilation system service, 786–803

Copyright Goodheart-Willcox Co., Inc.

airflow measurement, 788–793
duct problems and duct maintenance, 793–799
fan service, 799
filter service, 799–801
ventilation when using torch, 33
venting prohibition, 1569
venting system installation, 1143–1144
venturi effect, 1123
vertical packaged terminal air conditioners. *See* console air conditioners
very hard water, 933
VFD. *See* variable frequency drive
vibration absorbers, 466–467
viscosity, 190
vise, 116
volatile fluid, 358
volt, 272
voltage, 272
voltage drop, 281–282
voltage relay. *See* potential relay
volt-amperes (VA), 294
voltmeters, 392–393
volume, 74
volumetric efficiency, 1387–1388
definition, 1387
factors affecting, 1387–1388
volute, 445
vortex tubes, 1324–1325
VRF. *See* variable refrigerant flow systems

W

W. *See* watt or work
walk-in cabinets, 1284–1286
definition, 1284
water capacity (WC), 246
water coil, 1098
water-cooled condensers
checking, 1481–1484
cleaning, 1509
definition, 536
determining head pressure, 1481
excess water flow, 1483–1484
gasket replacement, 1483
installing, 1403–1404
installing and adjusting water valves, 1512
leak testing, 1481–1482
poisonous chemical cleaners, 1482
removal, 1510
removing scale deposits, 1482
removing water valves, 1511–1512
repairing, 1510, 1512
restricted water flow, 1483
servicing, 1509–1512
servicing water valves, 1510–1511
tracing water circuit troubles, 1484
water coolers
calculating service heat load, 1369–1370
definition, 1293
heat leakage, 1370
water defrost, 531
water hammer, 1484
water level/conductivity probe, 1454
water line installation, 641
water loop, 1098
water quality, ice machines, 1454–1455
water-source heat pump (WSHP), 1085
water valves, 890–894
electric water valves, 891
installing and adjusting water valves, 1512
motor water valve, 891
pressure water valves, 892–893
removing water valves, 1511–1512
servicing water valves, 1510–1511
solenoid water valve, 891
thermostatic water valves, 893–894
water pressure effect on water valves, 634
water valve head pressure settings (psig), 1513
water vapor, 690
watt (W), 58
wattage readings, 398
wattmeter, 294, 398
Watt's law, 292
wavelengths of light, 1220
wax, 660
wax separation, 189
WC. *See* water capacity
weak solution, 900
wear gauge, 1470
weather, 688
weight, 56
weight valve, 505
wet-base boiler, 1037
wet-bulb temperature, 693–694
wet decks, 886
wet roof cooling, 917
wet-rotor centrifugal pump, 1039
wet underfloor radiant heating system, 1052
Wheatstone bridge, 362
whole house fan, 752
wick lubricating system, 409
Wi-Fi enabled thermostat, 963–964
wind, 706–707
windchill index, 706
with respect to (WRT), 789
work (W), 58
work hardened, 138
workplace
lifelong learning, 16
professional behavior, 15–16

Copyright Goodheart-Willcox Co., Inc.

skills and personal traits, 16
success, 15–16
work practices
confined spaces, 38
fall protection training, 38
first aid procedures, 39
hand and power tools, 39
ladder safety, 37–38
lifting, 37
safe, 36–39
safety certifications, 39
scaffolding safety, 38
workstation, 1253
wrenches, 106–112
WRT, 789. *See* with respect to
WSHP. *See* water-source heat pump

Y

Yoder loop, 628
Y tube, 855

Z

zeotropes, 173
zeotropic blends, 173–174
zerk fitting, 410
zoned systems, 968–977
definition, 968
operational sequence for cooling, 974
operational sequence for heating, 972–974
troubleshooting, 974–977
zone valve, 1051

Copyright Goodheart-Willcox Co., Inc.